YANMAR

PARTS CATALOG

0CS10-M57800EN

Last update Nov., 2017

PREFACE

1. This Parts Catalog carries Yanmar excavator (crawler back-hoe) VIO35-6A for U.S.A..
   (M/# 60501～)

2. Parts catalog history

		Parts catalog NO.	Published	Remarks
1st edition	Vehicle	0CS10-G57800	Nov.,2012	
	Engine	0CB10-G80500		

3. Your understanding is asking that this parts catalog is not a technical data manual setting forth as servicing procedures, This parts catalog is using simplified illustration.
   Be sure to use Yanmar Genuine Parts in your maintenance servicing of Yanmar products.
   Be careful not to use the simple parts available in the market, otherwise their use in repairing causes such as an early breakage, for instance.

VEHICLE PAINTED COLOR

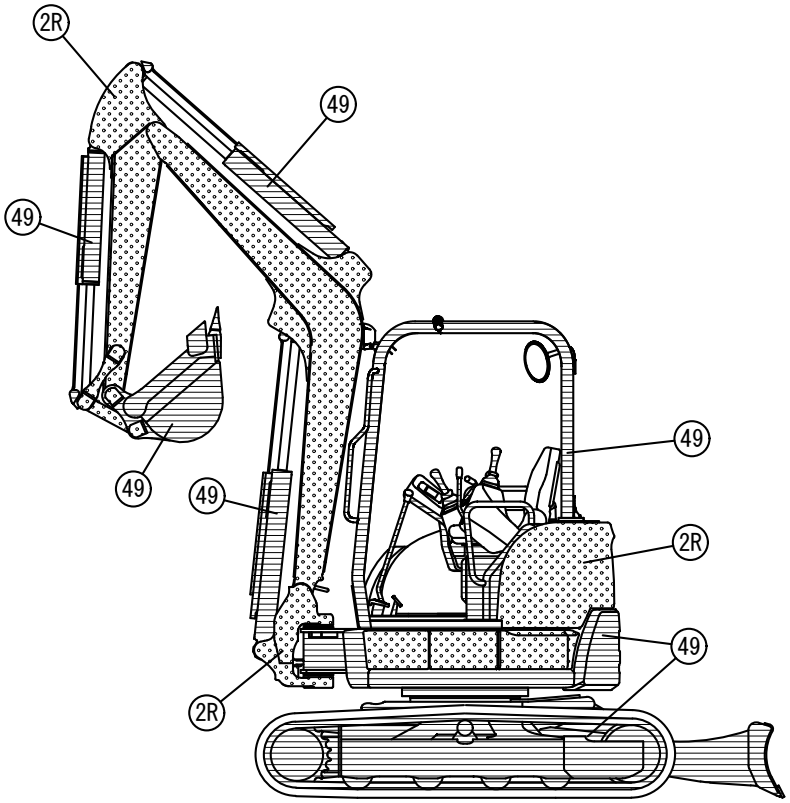

Color Code	Desc-ription	Painted Color	Paint Part No.		
			16L Can	4L Can	SPRAY
2R		YANMAR Turmeric Yellow	-------	977620-41001	977620-41002
49		YANMAR Navy Gray	-------	TOR-91390000	TOR-94800490

PICTURESQUE INDEX(1) ・・・MAIN PARTS

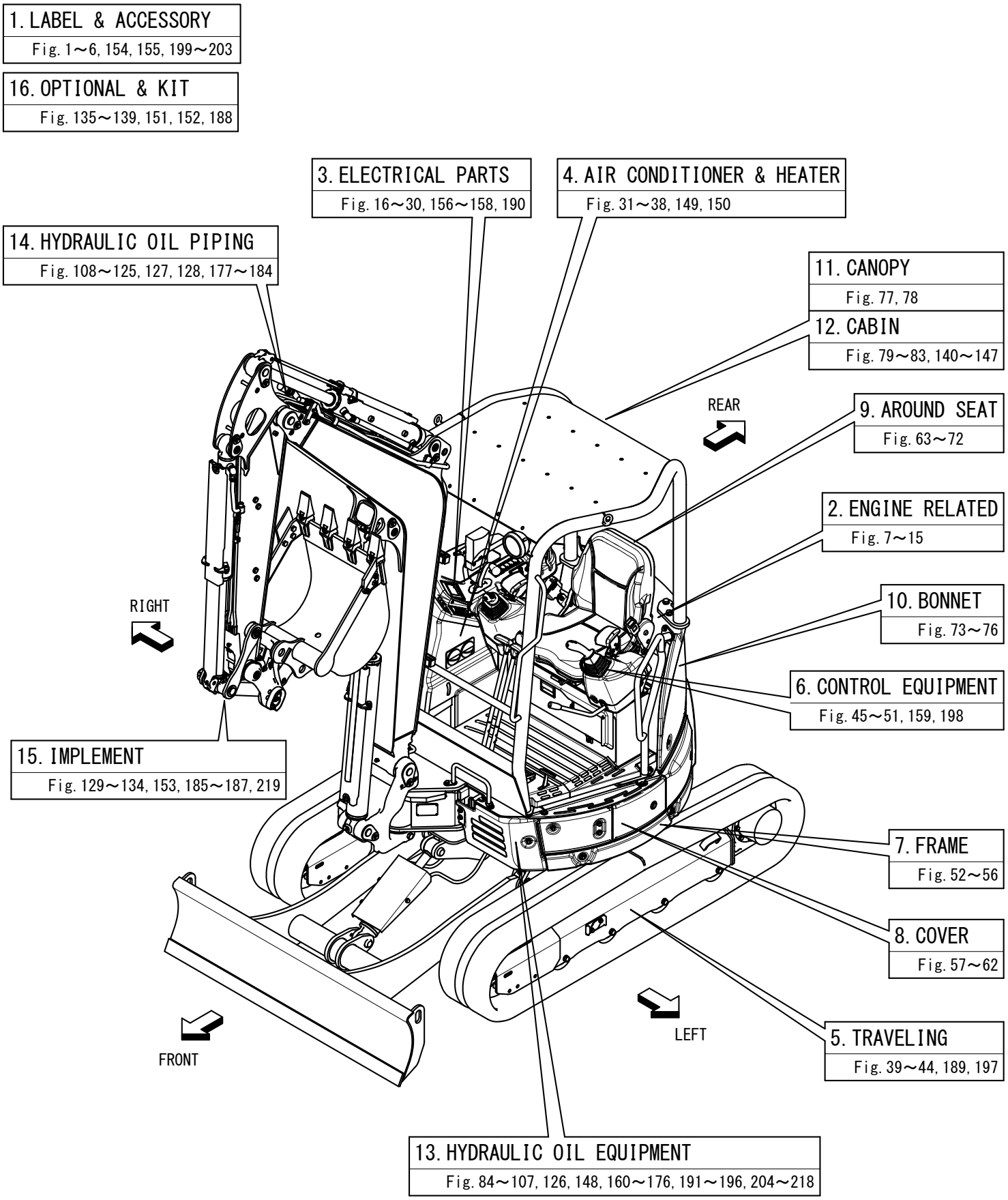

PICTURESQUE INDEX(2) ・・・HYDRAULIC SECTION

HYD.OIL PIPING Fig.108～121,177～183

CONTROL PIPING Fig.122,123,184

ARM CYLINDER Fig.88,161,192,196

HYD. OIL TANK Fig.107

REMOTE CONTROL VALVE Fig.102,103

BUCKET CYLINDER Fig.89,193

HITCH CYLINDER Fig.126

REAR

ACCUMULATOR Fig.124

RIGHT

SWING CYLINDER Fig.90,194

BOOM CYLINDER Fig.87,191

TURNING MOTOR Fig.93

TRAVEL MOTOR Fig.92,164

LEFT

FRONT

HYD.OIL PUMP Fig.85,86,160

BLADE CYLINDER Fig.91,195

2-WAY VALVE Fig.104,174

SOLENOID VALVE Fig.105,106

SWIVEL JOINT Fig.94,148,165

CONTROL VALVE Fig.95～101,166～173,204～218

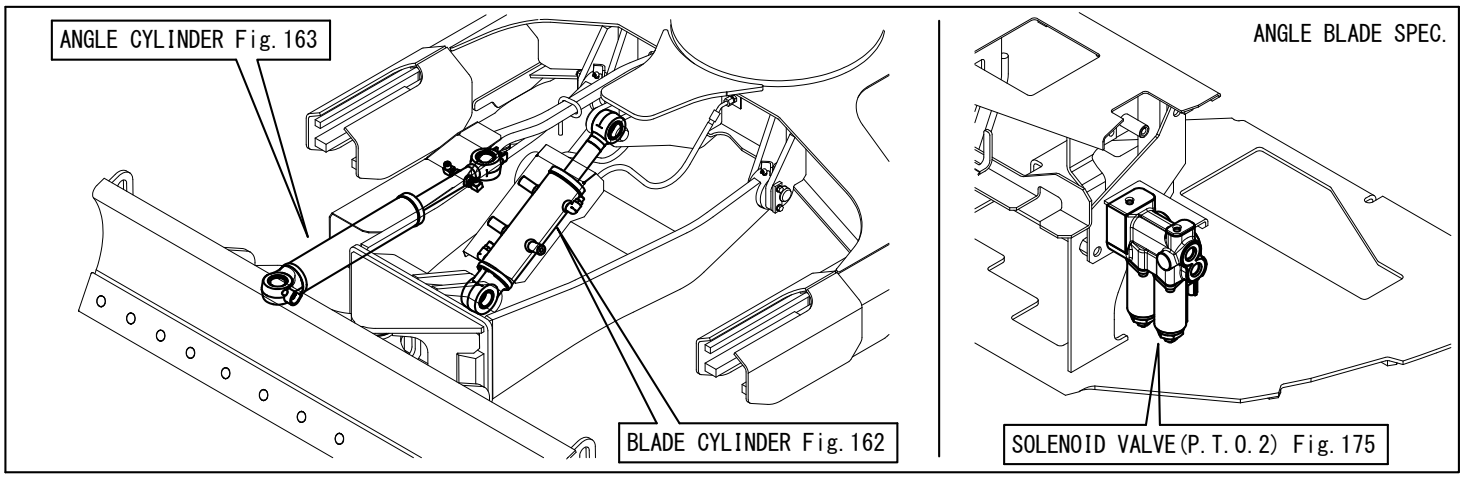

Contents

0CS10-M57800

Fig. No.	Fig. Name
LABEL & ACCESSORY	
1.	LABEL(EXTERIOR)(TO MAF000)
199.	(1A)LABEL(EXTERIOR)(FROM MAF001)
2.	LABEL(BONNET INSIDE)
3.	LABEL(CANOPY)(TO MAF000)
200.	(3A)LABEL(CANOPY)(FROM MAF001)
154.	(3B)LABEL(CANOPY)(ANGLE BLADE SPEC.)(TO MAF000)
201.	(3C)LABEL(CANOPY)(ANGLE BLADE SPEC.)(FROM MAF001)
4.	LABEL(CABIN)(TO MAF000)
202.	(4A)LABEL(CABIN)(FROM MAF001)
155.	(4B)LABEL(CABIN)(ANGLE BLADE SPEC.)(TO MAF000)
203.	(4C)LABEL(CABIN)(ANGLE BLADE SPEC.)(FROM MAF001)
5.	LABEL(QUICK COUPLER)
6.	CASE(TOOL)
ENGINE RELATED	
7.	MUFFLER
8.	AIR CLEANER
9.	ACCELERATOR
10.	ENGINE MOUNT
11.	RADIATOR SHURAUD
12.	RADIATOR & OIL COOLER
13.	DUCT
14.	FUEL TANK
15.	FUEL PIPING

Fig. No.	Fig. Name
ELECTRICAL PARTS	
16.	BATTERY
17.	AROUND THE ENGINE(TO M61125)
190.	(17A)AROUND THE ENGINE(FROM M61126)
18.	HORN
19.	SEAT MOUNT
20.	GUIDE HARNESS
21.	STARTER SWITCH
22.	ELECTRIC PARTS(A/D)
23.	TRAVEL BUZZER
24.	QUICK COUPLER(SWITCH BOX)
25.	CANOPY LAMP
26.	WORK LAMP
27.	INSTRUMENT PANEL
28.	ELECTRIC PARTS(ESS)
29.	HEATER
30.	BRACKET CONTROL
156.	(30A)ELECTRIC PARTS(P.T.O.)(ANGLE BLADE SPEC.)
157.	(30B)ELECTRIC PARTS(ANGLE BLADE LEVER)(ANGLE BLADE SPEC.)
158.	(30C)ELECTRIC PARTS(ANGLE BLADE LEVER)(ANGLE BLADE & ESS SPEC.)
AIR CONDITIONER & HEATER	
31.	AIR CONDITIONER(ELECTRIC PARTS)
32.	AIR CONDITIONER(UNIT)

Contents

0CS10-M57800

Fig. No.	Fig. Name
149.	(32A)AIR CONDITIONER(UNIT INNER PARTS)
33.	AIR CONDITIONER(PIPING)
34.	AIR CONDITIONER(ENGINE RELATED)
35.	AIR CONDITIONER(CONDENSER)
36.	HEATER(UNIT)
150.	(36A)HEATER(UNIT INNETR PARTS)
37.	HEATER(PIPING)
38.	DUCT(AIR CONDITIONER & HEATER)

TRAVELING

39.	SPROCKET
40.	IDLER & ADJUST(RUBBER CRAWLER SPEC.)
41.	IDLER & ADJUST(IRON CRAWLER SPEC.)
42.	TRACK ROLLER(Y SPEC.)(TO M61258)
189.	(42A)TRACK ROLLER(K SPEC.)(FROM M61259)
43.	CARRIER ROLLER
44.	CRAWLER
197.	(44A)CRAWLER(T SPEC.)

CONTROL EQUIPMENT

45.	MOUNT(VALVE)
46.	TRAVEL LEVER(FIXED TYPE)
198.	(46A)TRAVEL PEDAL(FOLDING TYPE)
47.	SWING PEDAL
48.	PEDAL COVER

Fig. No.	Fig. Name
49.	BLADE LEVER
159.	(49A)CONTROL EQUIPMENT(BLADE LEVER)(ANGLE BLADE SPEC.)
50.	ARMREST
51.	LOCK LEVER & STAND

FRAME

52.	TRAVEL FRAME
53.	CRAWLER GUARD
54.	COUNTER WEIGHT
55.	TURNING FRAME
56.	TURNING BEARING

COVER

57.	COVER(MULTI)
58.	UPPER COVER
59.	COVER(TURNING FRAME)
60.	COVER(TRAVEL FRAME)
61.	GUARD(FRAME)
62.	COVER(FRAME FRONT)

AROUND SEAT

63.	STEP(CABIN)
64.	STEP(CANOPY)
65.	COVER(LEVER)
66.	COVER(MONITOR)(CANOPY)

Contents

Fig. No.	Fig. Name
67.	COVER(MONITOR)(CABIN)
68.	SEAT MOUNT
69.	SEAT MOUNT(COVER)
70.	SEAT
71.	SEAT(INNER PARTS)
72.	HANDRAIL

BONNET

73.	BONNET(REAR)
74.	BONNET(FRONT)
75.	BONNET(LEFT)
76.	BONNET(RIGHT)

CANOPY

77.	CANOPY
78.	MOUNT

CABIN

79.	WINDOW WASHER
80.	CABIN(BODY)
140.	(80A)CABIN(DOOR)(1)
141.	(80B)CABIN(DOOR)(2)
142.	(80C)CABIN(FRONT WINDOW)(1)
143.	(80D)CABIN(FRONT WINDOW)(2)
144.	(80E)CABIN(GLASS)

Fig. No.	Fig. Name
145.	(80F)CABIN(REAR COVER)
146.	(80G)CABIN(ELECTRIC PARTS)
147.	(80H)CABIN(ACCESSORY)
81.	REARVIEW MIRROR
82.	MOUNT(CABIN)
83.	BOX(CABINE HEATER SPEC.)

HYDRAULIC OIL EQUIPMENT

84.	HYDRAULIC PUMP MOUNT
85.	HYDRAULIC PUMP(QUICK COUPLER SPEC.)
86.	HYDRAULIC PUMP(ESS SPEC.)
160.	(86A)HYDRAULIC PUMP(STANDARD SPEC.)
87.	BOOM CYLINDER(Y SPEC.)
191.	(87A)BOOM CYLINDER(K SPEC.)
88.	ARM CYLINDER(QUICK COUPLER SPEC.)(Y SPEC.)
192.	(88A)ARM CYLINDER(QUICK COUPLER SPEC.)(K SPEC.)
161.	(88B)ARM CYLINDER(STANDARD SPEC.)(Y SPEC.)
196.	(88C)ARM CYLINDER(STANDARD SPEC.)(K SPEC.)
89.	BUCKET CYLINDER(Y SPEC.)
193.	(89A)BUCKET CYLINDER(K SPEC.)
90.	SWING CYLINDER(Y SPEC.)
194.	(90A)SWING CYLINDER(K SPEC.)
91.	BLADE CYLINDER(Y SPEC.)
195.	(91A)BLADE CYLINDER(K SPEC.)
162.	(91B)BLADE CYLINDER(ANGLE BLADE SPEC.)

Contents

Fig. No.	Fig. Name
163.	(91C)ANGEL CYLINDER(ANGLE BLADE SPEC.)
92.	TRAVEL MOTOR
164.	(92A)TRAVEL MOTOR(ANGLE BLADE SPEC.)
93.	TURNING MOTOR
94.	SWIVEL JOINT(Y SPEC.)(TO M60555)
148.	(94A)SWIVEL JOINT(N SPEC.)(FROM M60556)
165.	(94B)SWIVEL JOINT(ANGLE BLADE SPEC.)
95.	CONTROL VALVE(1/7)
96.	CONTROL VALVE(2/7)
97.	CONTROL VALVE(3/7)
98.	CONTROL VALVE(4/7)
99.	CONTROL VALVE(5/7)
100.	CONTROL VALVE(6/7)
101.	CONTROL VALVE(7/7)
166.	(101A)CONTROL VALVE(1/8)(ANGLE BLADE SPEC.)
167.	(101B)CONTROL VALVE(2/8)(ANGLE BLADE SPEC.)
168.	(101C)CONTROL VALVE(3/8)(ANGLE BLADE SPEC.)
169.	(101D)CONTROL VALVE(4/8)(ANGLE BLADE SPEC.)
170.	(101E)CONTROL VALVE(5/8)(ANGLE BLADE SPEC.)
171.	(101F)CONTROL VALVE(6/8)(ANGLE BLADE SPEC.)
172.	(101G)CONTROL VALVE(7/8)(ANGLE BLADE SPEC.)
173.	(101H)CONTROL VALVE(8/8)(ANGLE BLADE SPEC.)
204.	(101I)CONTROL VALVE(1/7)(THUMB BRACKET SPEC.)
205.	(101J)CONTROL VALVE(2/7)(THUMB BRACKET SPEC.)
206.	(101K)CONTROL VALVE(3/7)(THUMB BRACKET SPEC.)
207.	(101L)CONTROL VALVE(4/7)(THUMB BRACKET SPEC.)
208.	(101M)CONTROL VALVE(5/7)(THUMB BRACKET SPEC.)
209.	(101N)CONTROL VALVE(6/7)(THUMB BRACKET SPEC.)
210.	(101O)CONTROL VALVE(7/7)(THUMB BRACKET SPEC.)
211.	(101P)CONTROL VALVE(1/8)(ANGLE BLADE SPEC.)(THUMB BRACKET SPEC.)
212.	(101Q)CONTROL VALVE(2/8)(ANGLE BLADE SPEC.)(THUMB BRACKET SPEC.)
213.	(101R)CONTROL VALVE(3/8)(ANGLE BLADE SPEC.)(THUMB BRACKET SPEC.)
214.	(101S)CONTROL VALVE(4/8)(ANGLE BLADE SPEC.)(THUMB BRACKET SPEC.)
215.	(101T)CONTROL VALVE(5/8)(ANGLE BLADE SPEC.)(THUMB BRACKET SPEC.)
216.	(101U)CONTROL VALVE(6/8)(ANGLE BLADE SPEC.)(THUMB BRACKET SPEC.)
217.	(101V)CONTROL VALVE(7/8)(ANGLE BLADE SPEC.)(THUMB BRACKET SPEC.)
218.	(101W)CONTROL VALVE(8/8)(ANGLE BLADE SPEC.)(THUMB BRACKET SPEC.)
102.	REMOTE CONTROL VALVE(RIGHT)
103.	REMOTE CONTROL VALVE(LEFT)
104.	2-WAY VALVE
174.	(104A)2-WAY VALVE(ANGLE BLADE SPEC.)
105.	SOLENOID VALVE(ESS : PTO)
106.	SOLENOID VALVE(P.T.O.)
175.	(106A)SOLENOID VALVE(P.T.O.2)(ANGLE BLADE SPEC.)
176.	(106B)SOLENOID VALVE BRACKET(P.T.O.2)(ANGLE BLADE SPEC.)
107.	HYD. OIL TANK
126.	QUICK COUPLER(HITCH CYLINDER)

HYDRAULIC OIL PIPING

108.	TANK - PUMP & CONTROL VALVE

Contents

Fig. No.	Fig. Name
109.	CONTROL VALVE - TURNING MOTOR
110.	CONTROL VALVE(FITTING)(1)
177.	(110A)CONTROL VALVE(FITTING)(1)(ANGLE BLADE SPEC.)
111.	CONTROL VALVE(FITTING)(2)
178.	(111A)CONTROL VALVE(FITTING)(2)(ANGLE BLADE SPEC.)
112.	CONTROL VALVE - RETURN & DRAIN
113.	CONTROL VALVE - BOOM BULKHEAD & SWING
114.	CONTROL VALVE - BOOM CYLINDER
115.	CONTROL VALVE - SWIVEL JOINT
179.	(115A)CONTROL VALVE - SWIVEL JOINT(ANGLE BLADE SPEC.)
116.	TRACK FRAME
180.	(116A)TRACK FRAME(ANGLE BLADE SPEC.)
117.	ARM CYLINDER & BUCKET CYLINDER
118.	P.T.O.(CONTROL VALVE - BOOM)
119.	P.T.O.(BOOM - ARM END)
120.	P.T.O.(SOLENOID VALVE)
181.	(120A)P.T.O.(SOLENOID VALVE)(ANGLE BLADE SPEC.)
121.	P.T.O.(SOLENOID VAVLE, ESS)
182.	(121A)P.T.O.(SOLENOID VAVLE, ESS)(ANGLE BLADE SPEC.)
183.	(121B)P.T.O.2(ANGLE BLADE)(ANGLE BLADE SPEC.)
122.	CONTROL PIPING(1)
184.	(122A)CONTROL PIPING(1)(ANGLE BLADE SPEC.)
123.	CONTROL PIPING(2)
124.	ACCUMULATOR
125.	GREASING
127.	QUICK COUPLER(HYD. OIL PIPING)(1)
128.	QUICK COUPLER(HYD. OIL PIPING)(2)

IMPLEMENT

129.	QUICK COUPLER(BODY)
130.	BOOM BRACKET
131.	BOOM
132.	ARM
219.	(132A)ARM(THUMB BRACKET SPEC.)
133.	BUCKET ARM & LINK
153.	(133A)BUCKET PIN(QUICK COUPLER SPEC.)
185.	(133B)BUCKET
186.	(133C)BUCKET PIN
134.	BLADE
187.	(134A)BLADE(ANGLE BLADE SPEC.)

OPTIONAL & KIT

135.	LABEL KIT(FOR CANADA)(OPTIONAL)
188.	(135A)LABEL KIT(FOR CANADA)(ANGLE BLADE SPEC.)(OPTIONAL)
136.	REMOTE CONTROLLER KIT(OPTIONAL)
137.	P.T.O. OVER LOAD VALVE KIT(OPTIONAL)
138.	ADDITIONAL WEIGHT KIT(OPTIONAL)
139.	BUCKET LINK WITH HOOK(OPTIONAL)
151.	RADIO KIT(OPTIONAL)
152.	RADIO KIT(OPTIONAL)(WITHOUT RADIO)

Fig.1. LABEL(EXTERIOR)(TO MAF000)

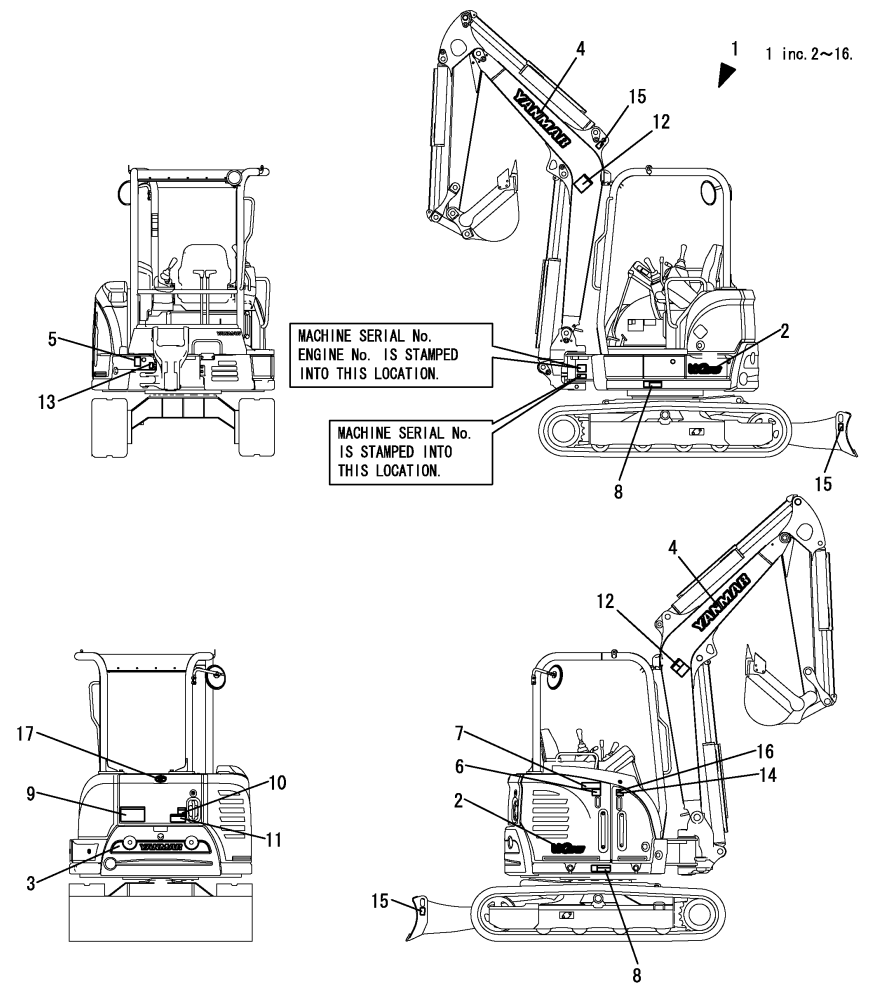

(A)=VIO35-6A P(US) (D)=
(B)=VIO35-6A C(US) (E)=
(C)= (F)=

No.	Lev.	Parts No.	Description	Q'ty (A)	(B)	(C)	(D)	(E)	(F)	I	R
1	1	172B03-08130	LABEL SET,OUT US	1	1						
1-1	1	172B03-08131	LABEL SET,OUT US	1	1					N	
	(A=M60895)	(B=M60895)									
2	2	172B03-03150	LABEL, MODEL L R	2	2						
2-1	2	172B03-03151	LABEL, MODEL L R	2	2					S	1
	(A=M60895)	(B=M60895)									
3	2	172B03-03160	LABEL,REAR	1	1						
4	2	172A65-03230	LABEL,YANMAR 627	2	2						
5	2	172A79-03160	LABEL,PTO SELCT	1	1						
6	2	172463-03290	LABEL, HYD.OIL	1	1						
7	2	172437-03322	LABEL, RESEVOIR	1	1						
8	2	172437-03352	LABEL, CYLINDER	2	2						
9	2	172437-03381	LABEL, SWING AREA	1	1						
10	2	172437-03402	LABEL, ENGINE COVER	1	1						
11	2	172A36-03411	LABEL, ENGINE ROOM	1	1						
12	2	172437-03461	LABEL, BOOM	2	2						
13	2	172B03-03460	LABEL, GREASE US	1	1						
14	2	172437-03501	LABEL, FUEL	1	1						
15	2	172437-03511	LABEL, HOOK	3	3						
16	2	114110-07761	LABEL, FUEL OIL CAUT	1	1						
17	1	41800-210040	EMBLEM, M 04	1	1						

Remarks
(1)Interchangeable replacement by simultaneous with two.

N:Old $\frac{\text{Yes}}{\text{No}}$ New, Q:Old $\frac{\text{No}}{\text{Yes}}$ New, R:Old $\frac{\text{Yes}}{\text{Yes}}$ New, S:Old $\frac{\text{No}}{\text{No}}$ New, W:Add, Z:Discontinued, F:Interchangeable by set, K:Q'ty Change

Copyright (C) YANMAR CO., LTD. All RightsReserved.

Fig.199. (1A)LABEL(EXTERIOR)(FROM MAF001)

(A)=VIO35-6A P(US)
(B)=VIO35-6A C(US)
(C)=
(D)=
(E)=
(F)=

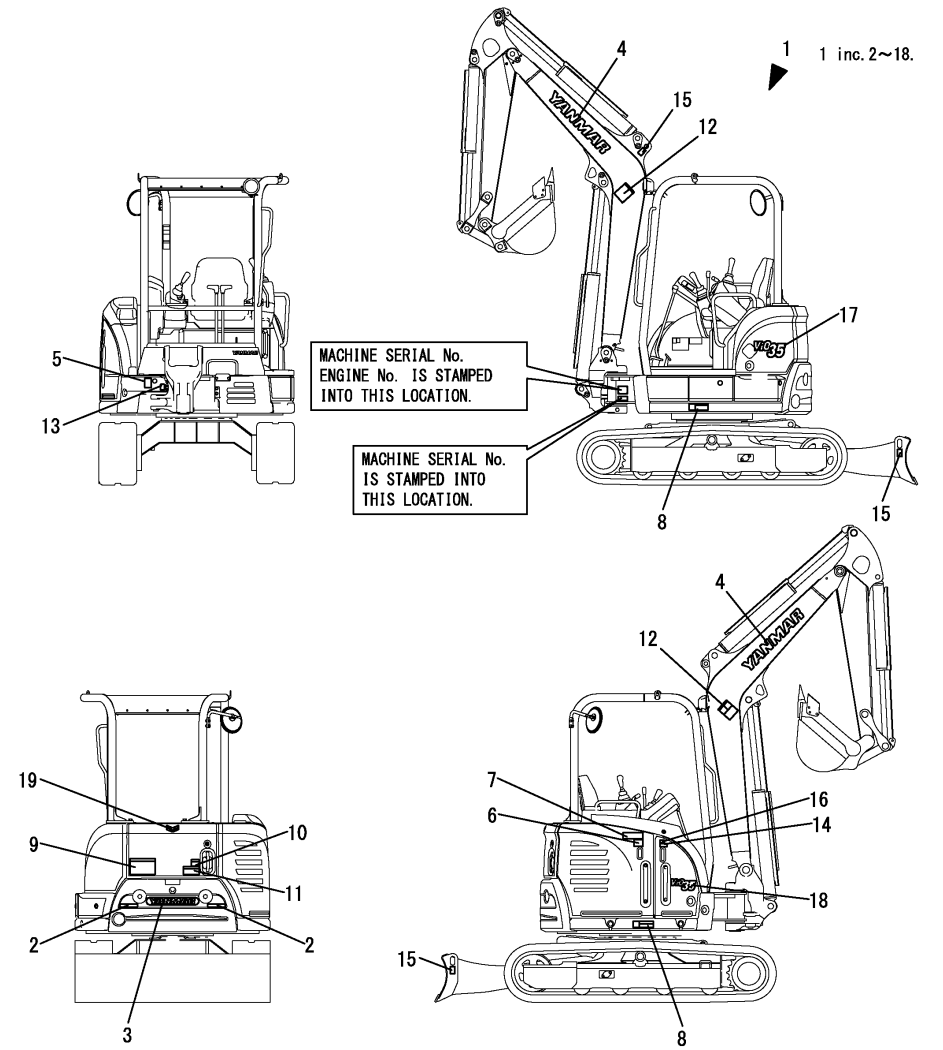

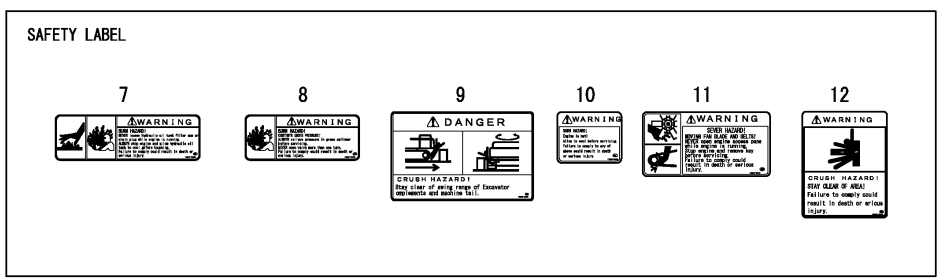

No.	Lev.	Parts No.	Description	Q'ty (A)	(B)	(C)	(D)	(E)	(F)	I	R
1	1	172B03-08132	LABEL SET,OUT US D	1	1						
2	2	172B04-03980	LABEL, REFLECTOR M	2	2						
3	2	172B03-04790	LABEL,REAR 30	1	1						
4	2	172544-03171	LABEL,YANMAR 630 BR	2	2						
5	2	172A79-03160	LABEL,PTO SELCT	1	1						
6	2	172463-03290	LABEL, HYD.OIL	1	1						
7	2	172437-03322	LABEL, RESEVOIR	1	1						
8	2	172437-03352	LABEL, CYLINDER	2	2						
9	2	172437-03381	LABEL, SWING AREA	1	1						
10	2	172437-03402	LABEL, ENGINE COVER	1	1						
11	2	172A36-03411	LABEL, ENGINE ROOM	1	1						
12	2	172437-03461	LABEL, BOOM	2	2						
13	2	172B03-03460	LABEL, GREASE US	1	1						
14	2	172437-03501	LABEL, FUEL	1	1						
15	2	172437-03511	LABEL, HOOK	3	3						
16	2	114110-07761	LABEL, FUEL OIL CAUT	1	1						
17	2	172B03-04470	LABEL,MODEL VIO35 L	1	1						
18	2	172B03-04480	LABEL,MODEL VIO35 R	1	1						
19	1	172B02-03300	EMBLEM ASSY,FY M1 Y	1	1						

N:Old $\overset{\text{Yes}}{\underset{\text{No}}{\leftrightarrow}}$ New, Q:Old $\overset{\text{No}}{\underset{\text{Yes}}{\leftrightarrow}}$ New, R:Old $\overset{\text{Yes}}{\underset{\text{Yes}}{\leftrightarrow}}$ New, S:Old $\overset{\text{No}}{\underset{\text{No}}{\leftrightarrow}}$ New, W:Add, Z:Discontinued, F:Interchangeable by set, K:Q'ty Change

Copyright (C) YANMAR CO., LTD. All RightsReserved.

Fig.2. LABEL(BONNET INSIDE)

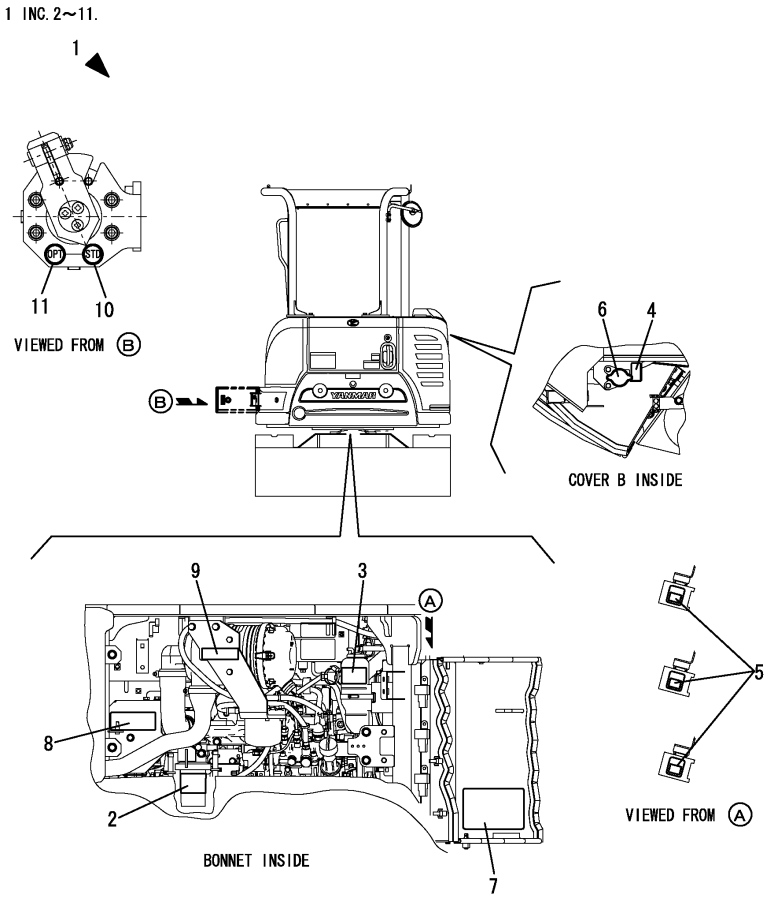

SAFETY LABEL

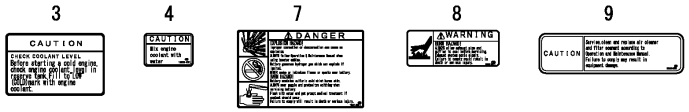

(A)=VIO35-6A P(US)
(B)=VIO35-6A C(US)
(C)=
(D)=
(E)=
(F)=

No.	Lev.	Parts No.	Description	Q'ty (A)	(B)	(C)	(D)	(E)	(F)	I	R
1	1	172B03-08170	LABEL SET,IN US	1	1						
2	2	172A07-03160	LABEL	1	1						
3	2	172A38-03201	LABEL, SUB TANK	1	1						
4	2	172A38-03211	LABEL, ANTI-FREEZING	1	1						
5	2	172B03-03260	LABEL,FUSE	1	1						
6	2	172462-03320	LABEL, RADIATOR	1	1						
7	2	172437-03361	LABEL, BATTERY	1	1						
8	2	172B03-03390	LABEL,SILENCER EX	1	1						
9	2	172125-03951	LABEL, AIR CLEANER	1	1						
10	2	172437-03610	LABEL	1	1						
11	2	172437-03620	LABEL	1	1						

N:Old $\xleftarrow[\text{No}]{\text{Yes}}$ New, Q:Old $\xleftarrow[\text{Yes}]{\text{No}}$ New, R:Old $\xleftarrow[\text{Yes}]{\text{Yes}}$ New, S:Old $\xleftarrow[\text{No}]{\text{No}}$ New, W:Add, Z:Discontinued, F:Interchangeable by set, K:Q'ty Change

Copyright (C) YANMAR CO., LTD. All RightsReserved.

Fig.3. LABEL(CANOPY)(TO MAF000)

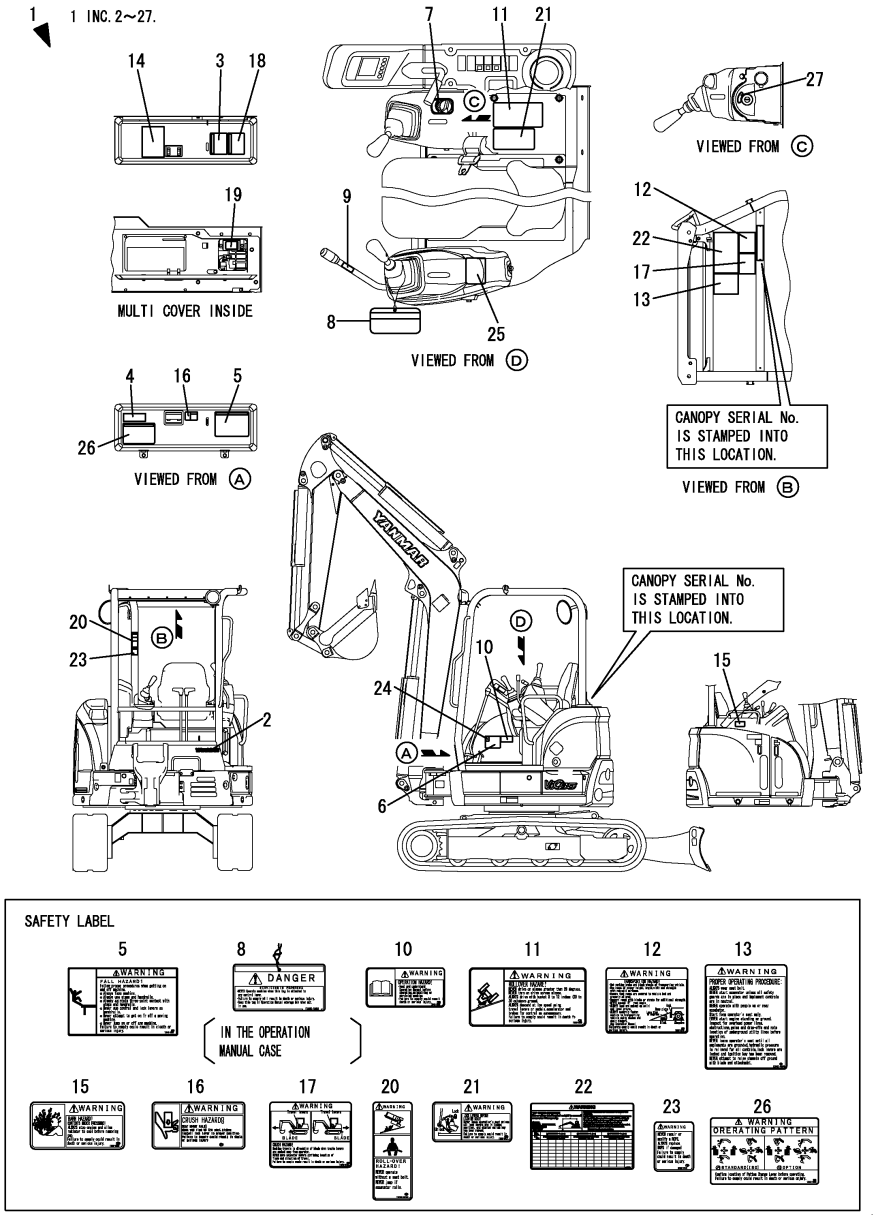

(A)=VIO35-6A P(US) (D)=
(B)=VIO35-6A C(US) (E)=
(C)= (F)=

No.	Lev.	Parts No.	Description	Q'ty (A)	(B)	(C)	(D)	(E)	(F)	I	R
1	1	172B03-08240	LABEL SET,4P US	1							
2	2	172B03-03181	LABEL,BRANDLOGO 200	1							
3	2	172437-03242	LABEL, CRAWLER	1							1
4	2	172B03-03110	LABEL, SPEC US	1							
5	2	172472-03141	LABEL, SUPPORT	1							
6	2	172B03-03200	LABEL, OPERATION	1							
7	2	172A69-03220	LABEL,ACCELERATOR	1							
8	2	172437-03252	TAG ASSY, CAUTION	1							
9	2	172183-03280	LABEL, LOCK	1							
10	2	172437-03302	LABEL, MANUAL	1							
11	2	172437-03312	LABEL, SLOPE	1							
12	2	172437-03343	LABEL, TRANSPORT	1							
13	2	172437-03372	LABEL, NEUTRAL	1							
14	2	172B03-03380	LABEL,OIL/WATER US	1							
15	2	172437-03391	LABEL, RADIATOR	1							
16	2	172B03-03410	LABEL,SEAT TILT UP	1							
17	2	172437-03432	LABEL, STEERING	1							
18	2	172B03-03430	LABEL,GREASING US	1							
19	2	172B03-03440	LABEL,FUSE BOX US	1							
20	2	172437-03451	LABEL, SEAT BELT	1							
21	2	172437-03471	LABEL, LEVER LOCK	1							
22	2	172B03-03480	LABEL,LIFT EX	1							
23	2	172437-03441	LABEL, ROPS	1							
24	2	172A79-03150	LABEL,PTO SWITCH	1							
25	2	172A47-03371	LABEL,PTO EX	1							
26	2	172437-03601	LABEL, 2-WAY US	1							
27	2	172B03-03220	LABEL,SW	1							

Remarks
* Not applied for angle blade specification.
(1)Rubber crawler specification.

N:Old $\xleftarrow[\text{No}]{\text{Yes}}$ New, Q:Old $\xleftarrow[\text{Yes}]{\text{No}}$ New, R:Old $\xleftarrow[\text{Yes}]{\text{Yes}}$ New, S:Old $\xleftarrow[\text{No}]{\text{No}}$ New, W:Add, Z:Discontinued, F:Interchangeable by set, K:Q'ty Change

Copyright (C) YANMAR CO., LTD. All RightsReserved.

Fig.200. (3A)LABEL(CANOPY)(FROM MAF001)

(A)=VIO35-6A P(US)
(B)=VIO35-6A C(US)
(C)=
(D)=
(E)=
(F)=

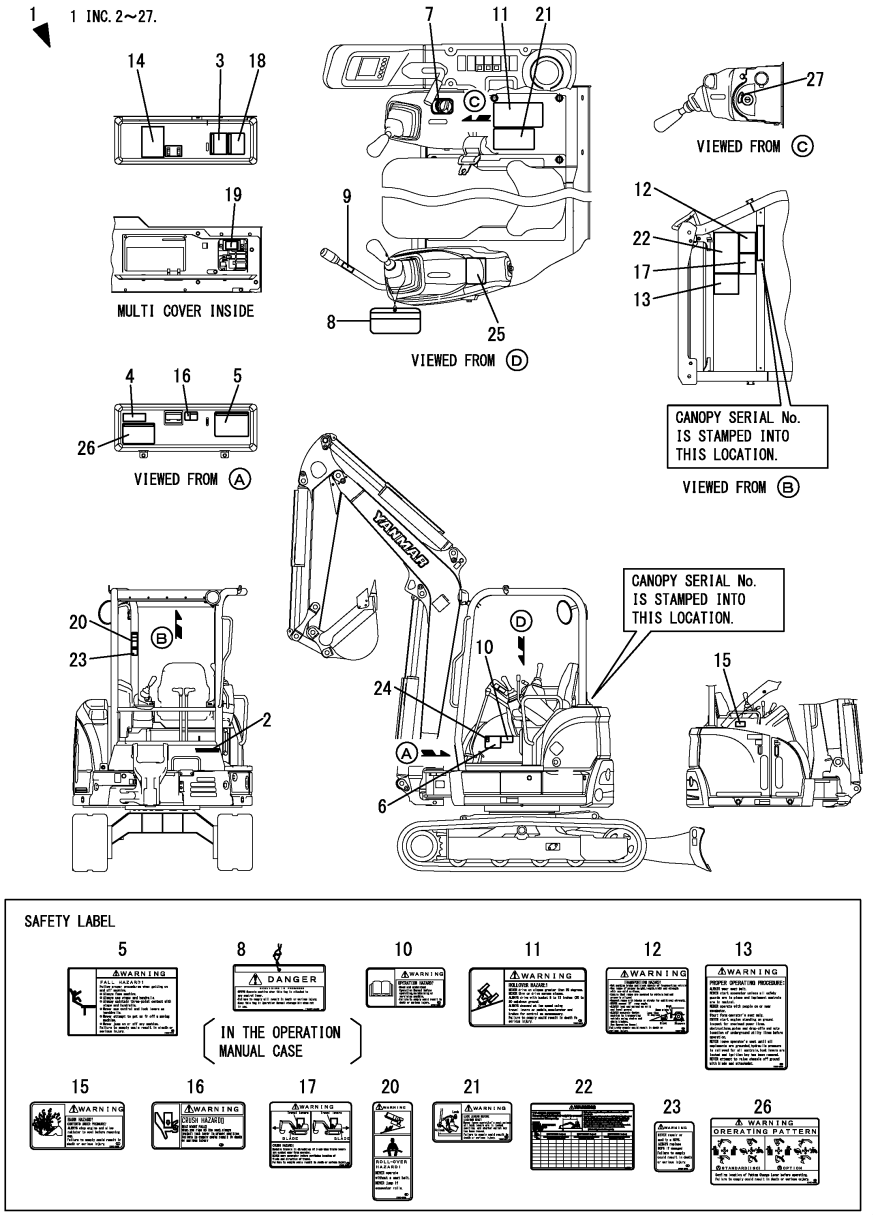

No.	Lev.	Parts No.	Description	Q'ty (A)	(B)	(C)	(D)	(E)	(F)	I	R
1	1	172B03-08241	LABEL SET,4P US D	1							
2	2	172B16-03180	LABEL,BRANDLOGO 200	1							
3	2	172437-03242	LABEL, CRAWLER	1							1
4	2	172B03-03110	LABEL, SPEC US	1							
5	2	172472-03141	LABEL, SUPPORT	1							
6	2	172B03-03200	LABEL, OPERATION	1							
7	2	172A69-03220	LABEL,ACCELERATOR	1							
8	2	172437-03252	TAG ASSY, CAUTION	1							
9	2	172183-03280	LABEL, LOCK	1							
10	2	172437-03302	LABEL, MANUAL	1							
11	2	172437-03312	LABEL, SLOPE	1							
12	2	172437-03343	LABEL, TRANSPORT	1							
13	2	172437-03372	LABEL, NEUTRAL	1							
14	2	172B03-03380	LABEL,OIL/WATER US	1							
15	2	172437-03391	LABEL, RADIATOR	1							
16	2	172B03-03410	LABEL,SEAT TILT UP	1							
17	2	172437-03432	LABEL, STEERING	1							
18	2	172B03-03430	LABEL,GREASING US	1							
19	2	172B03-03440	LABEL,FUSE BOX US	1							
20	2	172437-03451	LABEL, SEAT BELT	1							
21	2	172437-03471	LABEL, LEVER LOCK	1							
22	2	172B03-03480	LABEL,LIFT EX	1							
23	2	172437-03441	LABEL, ROPS	1							
24	2	172A79-03150	LABEL,PTO SWITCH	1							
25	2	172A47-03371	LABEL,PTO EX	1							
26	2	172437-03601	LABEL, 2-WAY US	1							
27	2	172B03-03220	LABEL,SW	1							

Remarks
* Not applied for angle blade specification.
(1)Rubber crawler specification.

N:Old $\xleftarrow[\text{No}]{\text{Yes}}$ New, Q:Old $\xleftarrow[\text{Yes}]{\text{No}}$ New, R:Old $\xleftarrow[\text{Yes}]{\text{Yes}}$ New, S:Old $\xleftarrow[\text{No}]{\text{No}}$ New, W:Add, Z:Discontinued, F:Interchangeable by set, K:Q'ty Change

Copyright (C) YANMAR CO., LTD. All RightsReserved.

Fig.154. (3B)LABEL(CANOPY)(ANGLE BLADE SPEC.)(TO MAF000)

(A)=VIO35-6A P(US) (D)=
(B)=VIO35-6A C(US) (E)=
(C)= (F)=

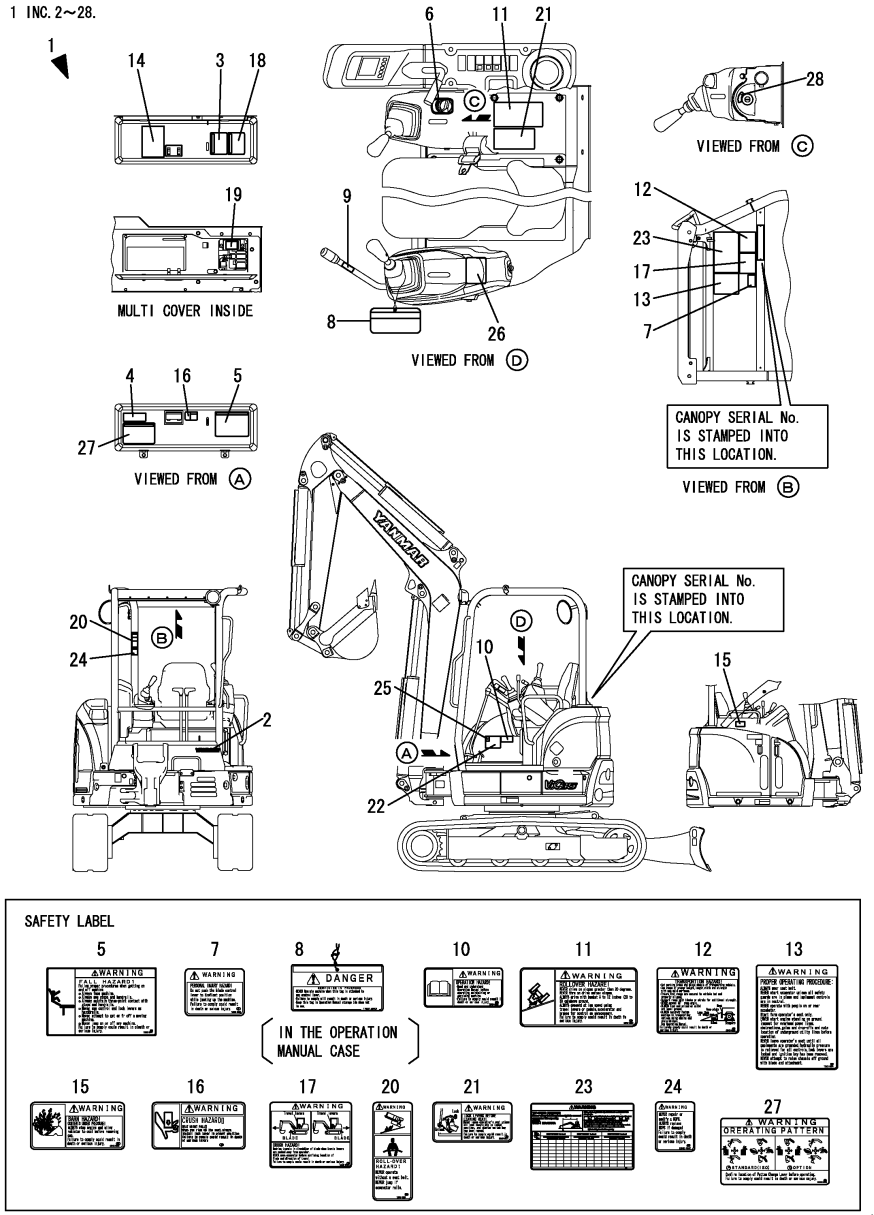

No.	Lev.	Parts No.	Description	Q'ty (A)	(B)	(C)	(D)	(E)	(F)	I	R
1	1	172B03-08520	LABEL SET,4P US ANG	1							
2	2	172B03-03181	LABEL,BRANDLOGO 200	1							
3	2	172437-03242	LABEL, CRAWLER	1							1
4	2	172B03-03080	LABEL, SPEC US ANGLE	1							
5	2	172472-03141	LABEL, SUPPORT	1							
6	2	172A69-03220	LABEL,ACCELERATOR	1							
7	2	172A79-03220	LABEL,WARNING ANGLE	1							
8	2	172437-03252	TAG ASSY, CAUTION	1							
9	2	172183-03280	LABEL, LOCK	1							
10	2	172437-03302	LABEL, MANUAL	1							
11	2	172437-03312	LABEL, SLOPE	1							
12	2	172437-03343	LABEL, TRANSPORT	1							
13	2	172437-03372	LABEL, NEUTRAL	1							
14	2	172B03-03380	LABEL,OIL/WATER US	1							
15	2	172437-03391	LABEL, RADIATOR	1							
16	2	172B03-03410	LABEL,SEAT TILT UP	1							
17	2	172437-03432	LABEL, STEERING	1							
18	2	172B03-03430	LABEL,GREASING US	1							
19	2	172B03-03440	LABEL,FUSE BOX US	1							
20	2	172437-03451	LABEL, SEAT BELT	1							
21	2	172437-03471	LABEL, LEVER LOCK	1							
22	2	172B03-03670	LABEL, OPERATION ANG	1							
23	2	172B03-03680	LABEL,LIFT ANGLE	1							
24	2	172437-03441	LABEL, ROPS	1							
25	2	172A79-03150	LABEL,PTO SWITCH	1							
26	2	172A47-03371	LABEL,PTO EX	1							
27	2	172437-03601	LABEL, 2-WAY US	1							
28	2	172B03-03220	LABEL,SW	1							

Remarks
* Exclusive figure for angle blade specification.
(1)Rubber crawler specification.

N:Old $\xleftarrow[\text{No}]{\text{Yes}}$ New, Q:Old $\xleftarrow[\text{Yes}]{\text{No}}$ New, R:Old $\xleftarrow[\text{Yes}]{\text{Yes}}$ New, S:Old $\xleftarrow[\text{No}]{\text{No}}$ New, W:Add, Z:Discontinued, F:Interchangeable by set, K:Q'ty Change

Copyright (C) YANMAR CO., LTD. All RightsReserved.

Fig.201. (3C)LABEL(CANOPY)(ANGLE BLADE SPEC.)(FROM MAF001)

(A)=VIO35-6A P(US)
(B)=VIO35-6A C(US)
(C)=
(D)=
(E)=
(F)=

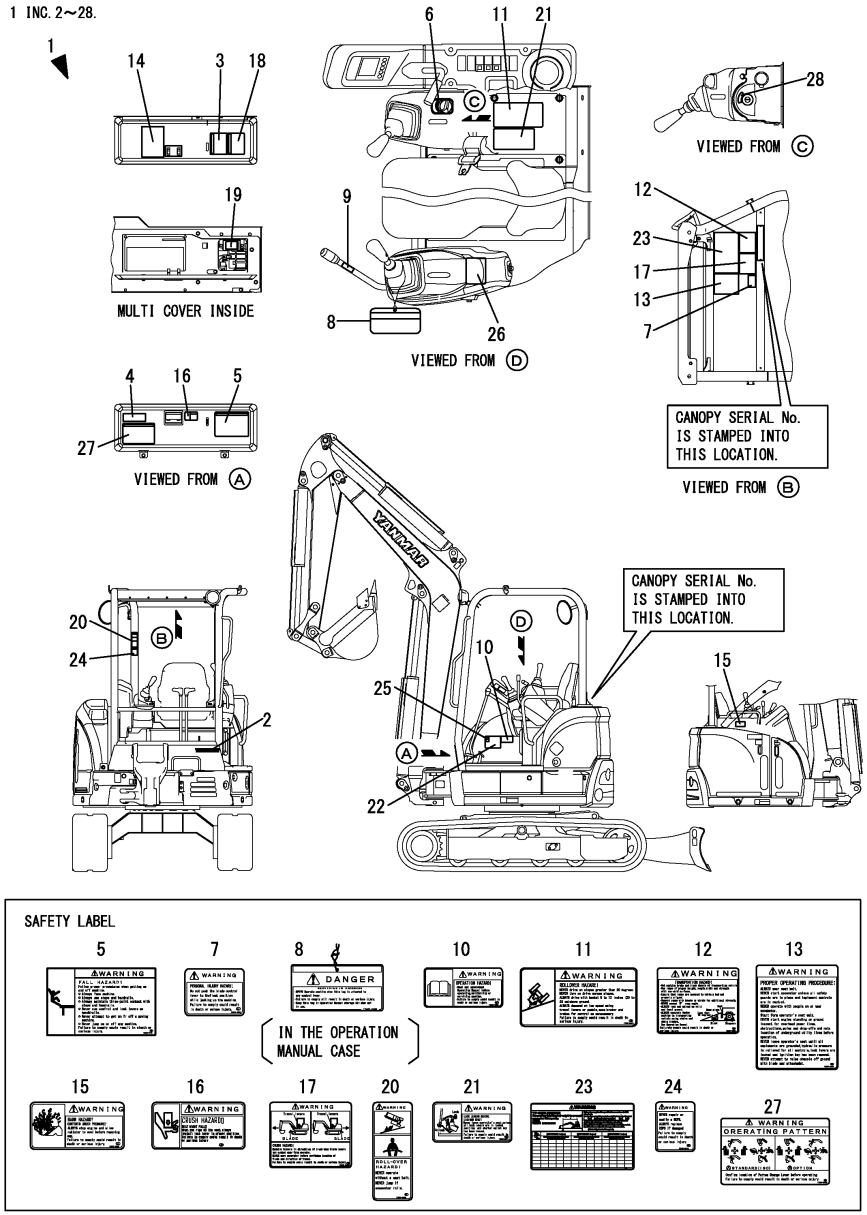

No.	Lev.	Parts No.	Description	Q'ty (A)	(B)	(C)	(D)	(E)	(F)	I	R
1	1	172B03-08521	LABEL SET,4PUS ANG D	1							
2	2	172B16-03180	LABEL,BRANDLOGO 200	1							
3	2	172437-03242	LABEL, CRAWLER	1							1
4	2	172B03-03080	LABEL, SPEC US ANGLE	1							
5	2	172472-03141	LABEL, SUPPORT	1							
6	2	172A69-03220	LABEL,ACCELERATOR	1							
7	2	172A79-03220	LABEL,WARNING ANGLE	1							
8	2	172437-03252	TAG ASSY, CAUTION	1							
9	2	172183-03280	LABEL, LOCK	1							
10	2	172437-03302	LABEL, MANUAL	1							
11	2	172437-03312	LABEL, SLOPE	1							
12	2	172437-03343	LABEL, TRANSPORT	1							
13	2	172437-03372	LABEL, NEUTRAL	1							
14	2	172B03-03380	LABEL,OIL/WATER US	1							
15	2	172437-03391	LABEL, RADIATOR	1							
16	2	172B03-03410	LABEL,SEAT TILT UP	1							
17	2	172437-03432	LABEL, STEERING	1							
18	2	172B03-03430	LABEL,GREASING US	1							
19	2	172B03-03440	LABEL,FUSE BOX US	1							
20	2	172437-03451	LABEL, SEAT BELT	1							
21	2	172437-03471	LABEL, LEVER LOCK	1							
22	2	172B03-03670	LABEL, OPERATION ANG	1							
23	2	172B03-03680	LABEL,LIFT ANGLE	1							
24	2	172437-03441	LABEL, ROPS	1							
25	2	172A79-03150	LABEL,PTO SWITCH	1							
26	2	172A47-03371	LABEL,PTO EX	1							
27	2	172437-03601	LABEL, 2-WAY US	1							
28	2	172B03-03220	LABEL,SW	1							

Remarks
* Exclusive figure for angle blade specification.
(1)Rubber crawler specification.

N:Old $\xleftarrow[\text{No}]{\text{Yes}}$ New, Q:Old $\xleftarrow[\text{Yes}]{\text{No}}$ New, R:Old $\xleftarrow[\text{Yes}]{\text{Yes}}$ New, S:Old $\xleftarrow[\text{No}]{\text{No}}$ New, W:Add, Z:Discontinued, F:Interchangeable by set, K:Q'ty Change

Copyright (C) YANMAR CO., LTD. All RightsReserved.

Fig.4. LABEL(CABIN)(TO MAF000)

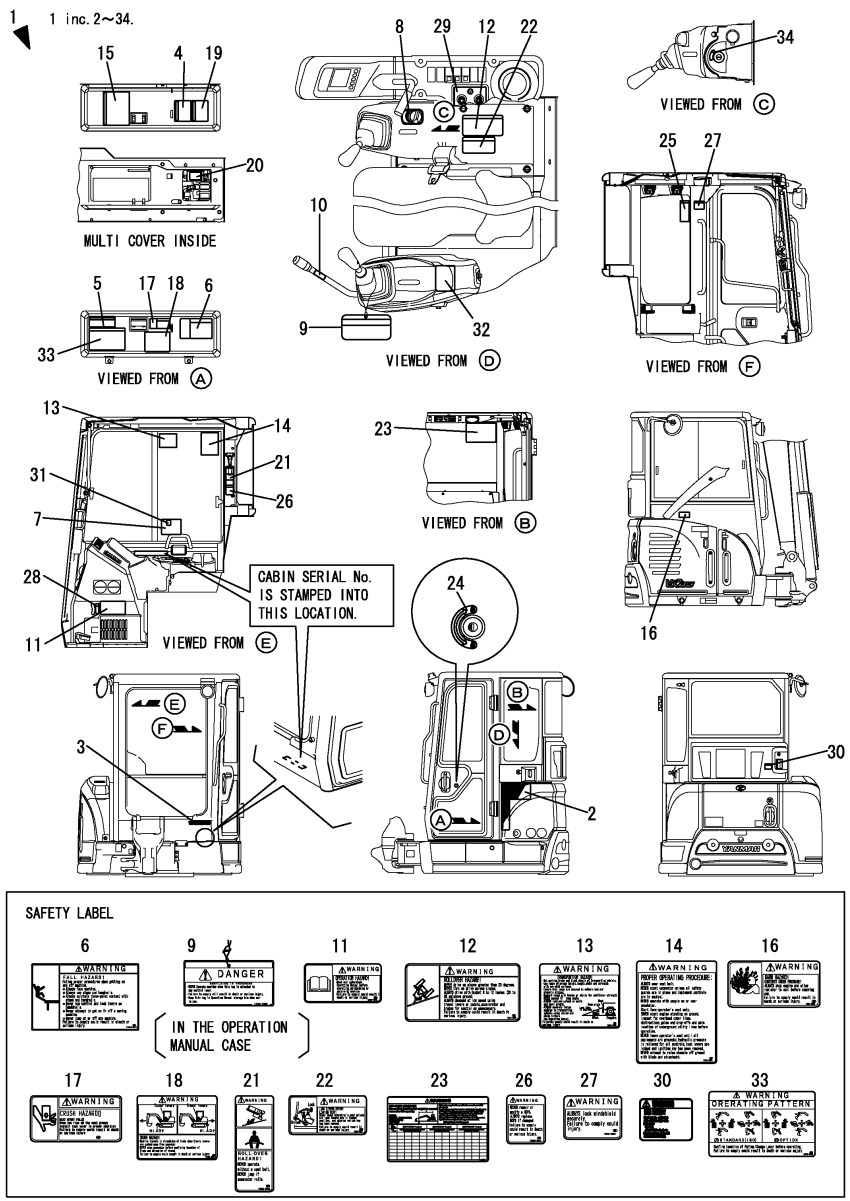

(A)=VIO35-6A P(US) (D)=
(B)=VIO35-6A C(US) (E)=
(C)= (F)=

No.	Lev.	Parts No.	Description	Q'ty (A)	(B)	(C)	(D)	(E)	(F)	I	R
1	1	172B03-08270	LABEL SET,CAB US		1						
2	2	172B03-03170	LABEL,CAB L		1						
3	2	172B03-03181	LABEL,BRANDLOGO 200		1						
4	2	172437-03242	LABEL, CRAWLER		1						1
5	2	172B03-03110	LABEL, SPEC US		1						
6	2	172472-03141	LABEL, SUPPORT		1						
7	2	172B03-03200	LABEL, OPERATION		1						
8	2	172A69-03220	LABEL,ACCELERATOR		1						
9	2	172437-03252	TAG ASSY, CAUTION		1						
10	2	172183-03280	LABEL, LOCK		1						
11	2	172437-03302	LABEL, MANUAL		1						
12	2	172437-03312	LABEL, SLOPE		1						
13	2	172437-03343	LABEL, TRANSPORT		1						
14	2	172437-03372	LABEL, NEUTRAL		1						
15	2	172B03-03380	LABEL,OIL/WATER US		1						
16	2	172437-03391	LABEL, RADIATOR		1						
17	2	172B03-03410	LABEL,SEAT TILT UP		1						
18	2	172437-03432	LABEL, STEERING		1						
19	2	172B03-03430	LABEL,GREASING US		1						
20	2	172B03-03440	LABEL,FUSE BOX US		1						
21	2	172437-03451	LABEL, SEAT BELT		1						
22	2	172437-03471	LABEL, LEVER LOCK		1						
23	2	172B03-03480	LABEL,LIFT EX		1						
24	2	172B03-03280	LABEL,DOOR KEY LOCK		1						
25	2	172463-03320	LABEL,F/W LOWER US		1						
26	2	172437-03441	LABEL, ROPS		1						
27	2	172437-03551	LABEL, WINDOW US		1						
28	2	172B03-03240	LABEL,AIR SELECT		1						
29	2	172B03-03250	LABEL,SW A/C		1						2
30	2	172B03-03420	LABEL,WARNING A/C US		1						2
31	2	172A79-03150	LABEL,PTO SWITCH		1						
32	2	172A47-03371	LABEL,PTO EX		1						
33	2	172437-03601	LABEL, 2-WAY US		1						
34	2	172B03-03220	LABEL,SW		1						

Remarks
* Not applied for angle blade specification.
(1)Rubber crawler specification.
(2)Air Conditioner specification.

N:Old $\overset{\text{Yes}}{\underset{\text{No}}{\leftrightarrow}}$ New, Q:Old $\overset{\text{No}}{\underset{\text{Yes}}{\leftrightarrow}}$ New, R:Old $\overset{\text{Yes}}{\underset{\text{Yes}}{\leftrightarrow}}$ New, S:Old $\overset{\text{No}}{\underset{\text{No}}{\leftrightarrow}}$ New, W:Add, Z:Discontinued, F:Interchangeable by set, K:Q'ty Change

Copyright (C) YANMAR CO., LTD. All RightsReserved.

Fig.202. (4A)LABEL(CABIN)(FROM MAF001)

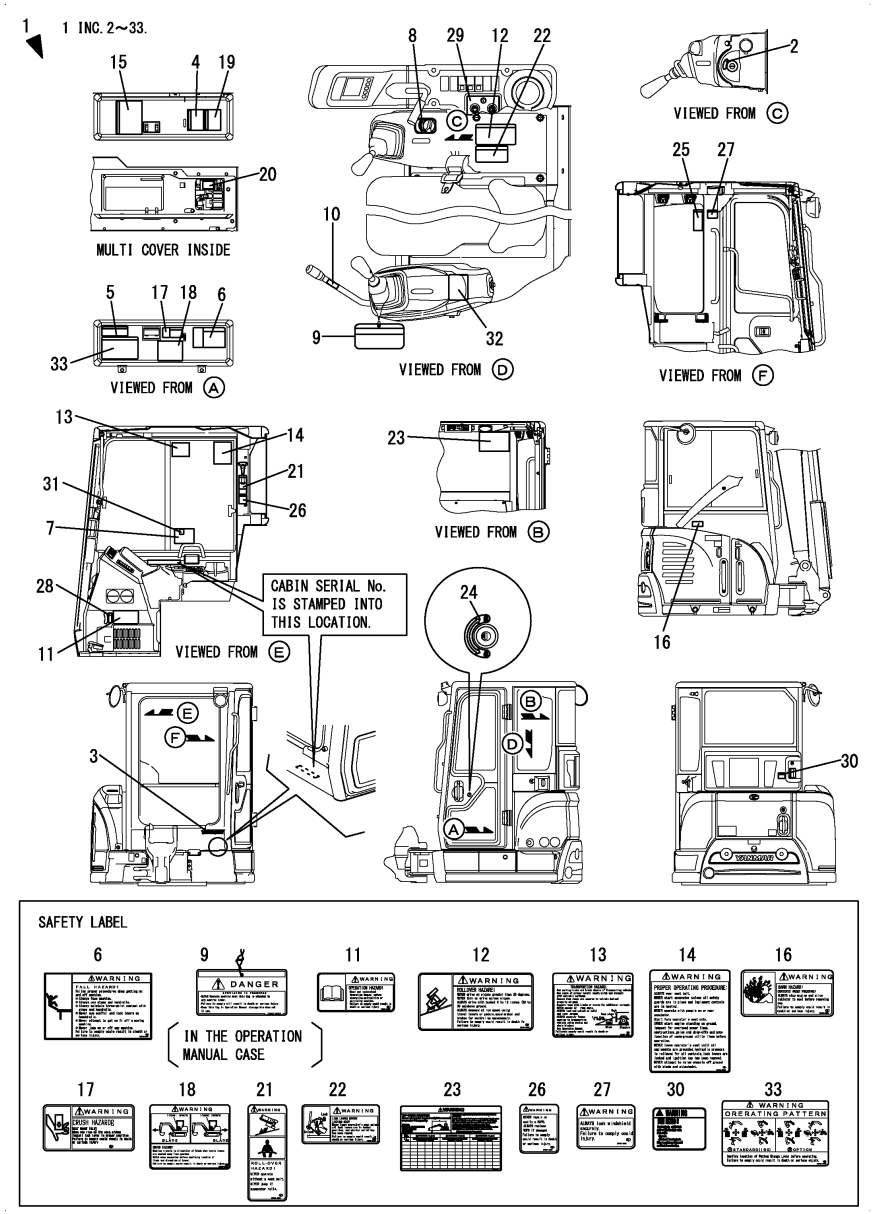

(A)=VIO35-6A P(US) (D)=
(B)=VIO35-6A C(US) (E)=
(C)= (F)=

No.	Lev.	Parts No.	Description	Q'ty (A)	(B)	(C)	(D)	(E)	(F)	I	R
1	1	172B03-08271	LABEL SET,CAB US D		1						
2	2	172B03-03220	LABEL,SW		1						
3	2	172B16-03180	LABEL,BRANDLOGO 200		1						
4	2	172437-03242	LABEL, CRAWLER		1						1
5	2	172B03-03110	LABEL, SPEC US		1						
6	2	172472-03141	LABEL, SUPPORT		1						
7	2	172B03-03200	LABEL, OPERATION		1						
8	2	172A69-03220	LABEL,ACCELERATOR		1						
9	2	172437-03252	TAG ASSY, CAUTION		1						
10	2	172183-03280	LABEL, LOCK		1						
11	2	172437-03302	LABEL, MANUAL		1						
12	2	172437-03312	LABEL, SLOPE		1						
13	2	172437-03343	LABEL, TRANSPORT		1						
14	2	172437-03372	LABEL, NEUTRAL		1						
15	2	172B03-03380	LABEL,OIL/WATER US		1						
16	2	172437-03391	LABEL, RADIATOR		1						
17	2	172B03-03410	LABEL,SEAT TILT UP		1						
18	2	172437-03432	LABEL, STEERING		1						
19	2	172B03-03430	LABEL,GREASING US		1						
20	2	172B03-03440	LABEL,FUSE BOX US		1						
21	2	172437-03451	LABEL, SEAT BELT		1						
22	2	172437-03471	LABEL, LEVER LOCK		1						
23	2	172B03-03480	LABEL,LIFT EX		1						
24	2	172B03-03280	LABEL,DOOR KEY LOCK		1						
25	2	172463-03320	LABEL,F/W LOWER US		1						
26	2	172437-03441	LABEL, ROPS		1						
27	2	172437-03551	LABEL, WINDOW US		1						
28	2	172B03-03240	LABEL,AIR SELECT		1						
29	2	172B03-03250	LABEL,SW A/C		1						2
30	2	172B03-03420	LABEL,WARNING A/C US		1						2
31	2	172A79-03150	LABEL,PTO SWITCH		1						
32	2	172A47-03371	LABEL,PTO EX		1						
33	2	172437-03601	LABEL, 2-WAY US		1						

Remarks
* Not applied for angle blade specification.
(1)Rubber crawler specification.
(2)Air Conditioner specification.

N:Old $\overset{\text{Yes}}{\underset{\text{No}}{\leftrightarrow}}$ New, Q:Old $\overset{\text{No}}{\underset{\text{Yes}}{\leftrightarrow}}$ New, R:Old $\overset{\text{Yes}}{\underset{\text{Yes}}{\leftrightarrow}}$ New, S:Old $\overset{\text{No}}{\underset{\text{No}}{\leftrightarrow}}$ New, W:Add, Z:Discontinued, F:Interchangeable by set, K:Q'ty Change

Copyright (C) YANMAR CO., LTD. All RightsReserved.

Fig.155. (4B)LABEL(CABIN)(ANGLE BLADE SPEC.)(TO MAF000)

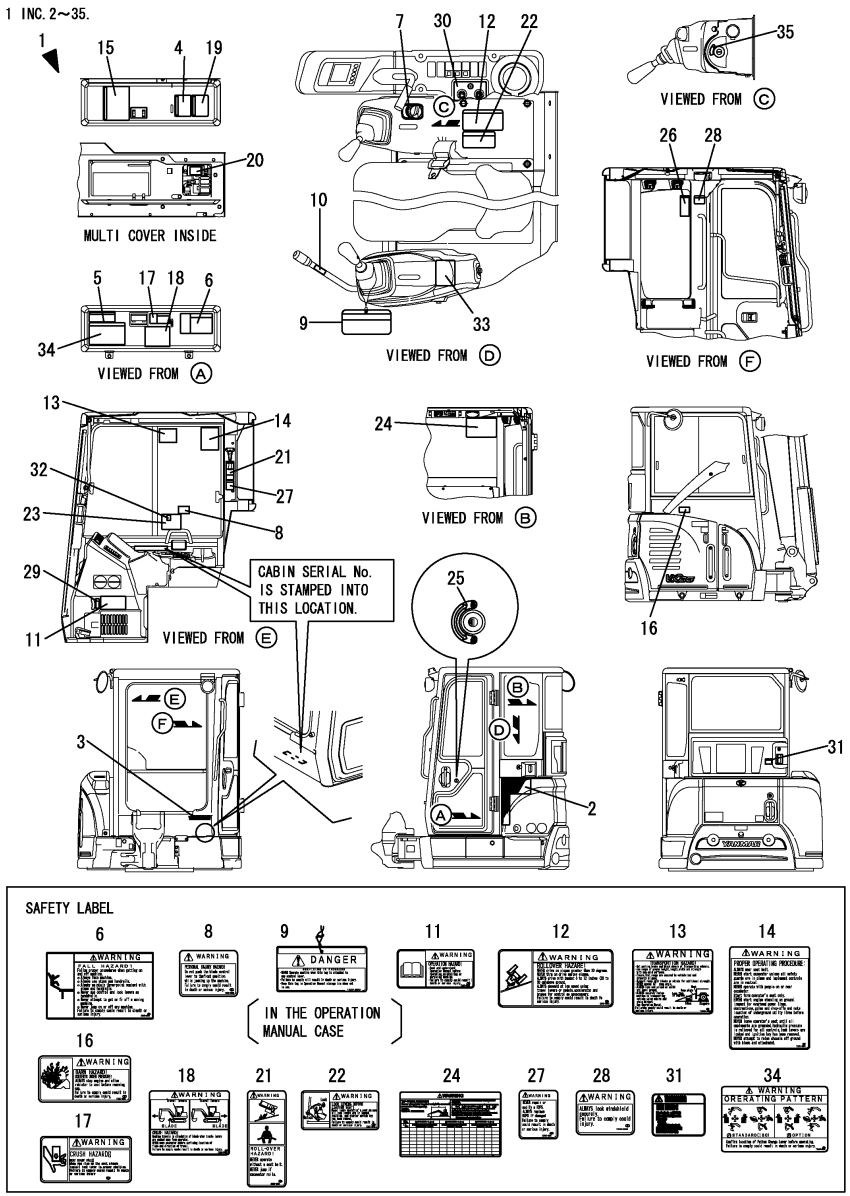

(A)=VIO35-6A P(US)
(B)=VIO35-6A C(US)
(C)=
(D)=
(E)=
(F)=

No.	Lev.	Parts No.	Description	Q'ty (A)	(B)	(C)	(D)	(E)	(F)	I	R
1	1	172B03-08530	LABEL SET,CAB US ANG		1						
2	2	172B03-03170	LABEL,CAB L		1						
3	2	172B03-03181	LABEL,BRANDLOGO 200		1						
4	2	172437-03242	LABEL, CRAWLER		1						1
5	2	172B03-03080	LABEL, SPEC US ANGLE		1						
6	2	172472-03141	LABEL, SUPPORT		1						
7	2	172A69-03220	LABEL,ACCELERATOR		1						
8	2	172A79-03220	LABEL,WARNING ANGLE		1						
9	2	172437-03252	TAG ASSY, CAUTION		1						
10	2	172183-03280	LABEL, LOCK		1						
11	2	172437-03302	LABEL, MANUAL		1						
12	2	172437-03312	LABEL, SLOPE		1						
13	2	172437-03343	LABEL, TRANSPORT		1						
14	2	172437-03372	LABEL, NEUTRAL		1						
15	2	172B03-03380	LABEL,OIL/WATER US		1						
16	2	172437-03391	LABEL, RADIATOR		1						
17	2	172B03-03410	LABEL,SEAT TILT UP		1						
18	2	172437-03432	LABEL, STEERING		1						
19	2	172B03-03430	LABEL,GREASING US		1						
20	2	172B03-03440	LABEL,FUSE BOX US		1						
21	2	172437-03451	LABEL, SEAT BELT		1						
22	2	172437-03471	LABEL, LEVER LOCK		1						
23	2	172B03-03670	LABEL, OPERATION ANG		1						
24	2	172B03-03680	LABEL,LIFT ANGLE		1						
25	2	172B03-03280	LABEL,DOOR KEY LOCK		1						
26	2	172463-03320	LABEL,F/W LOWER US		1						
27	2	172437-03441	LABEL, ROPS		1						
28	2	172437-03551	LABEL, WINDOW US		1						
29	2	172B03-03240	LABEL,AIR SELECT		1						
30	2	172B03-03250	LABEL,SW A/C		1						2
31	2	172B03-03420	LABEL,WARNING A/C US		1						2
32	2	172A79-03150	LABEL,PTO SWITCH		1						
33	2	172A47-03371	LABEL,PTO EX		1						
34	2	172437-03601	LABEL, 2-WAY US		1						
35	2	172B03-03220	LABEL,SW		1						

Remarks
* Exclusive figure for angle blade specification.
(1)Rubber crawler specification.
(2)Air Conditioner specification.

N:Old $\xleftarrow[\text{No}]{\text{Yes}}$ New, Q:Old $\xleftarrow[\text{Yes}]{\text{No}}$ New, R:Old $\xleftarrow[\text{Yes}]{\text{Yes}}$ New, S:Old $\xleftarrow[\text{No}]{\text{No}}$ New, W:Add, Z:Discontinued, F:Interchangeable by set, K:Q'ty Change

Copyright (C) YANMAR CO., LTD. All RightsReserved.

Fig.203. (4C)LABEL(CABIN)(ANGLE BLADE SPEC.)(FROM MAF001)

(A)=VIO35-6A P(US) (D)=
(B)=VIO35-6A C(US) (E)=
(C)= (F)=

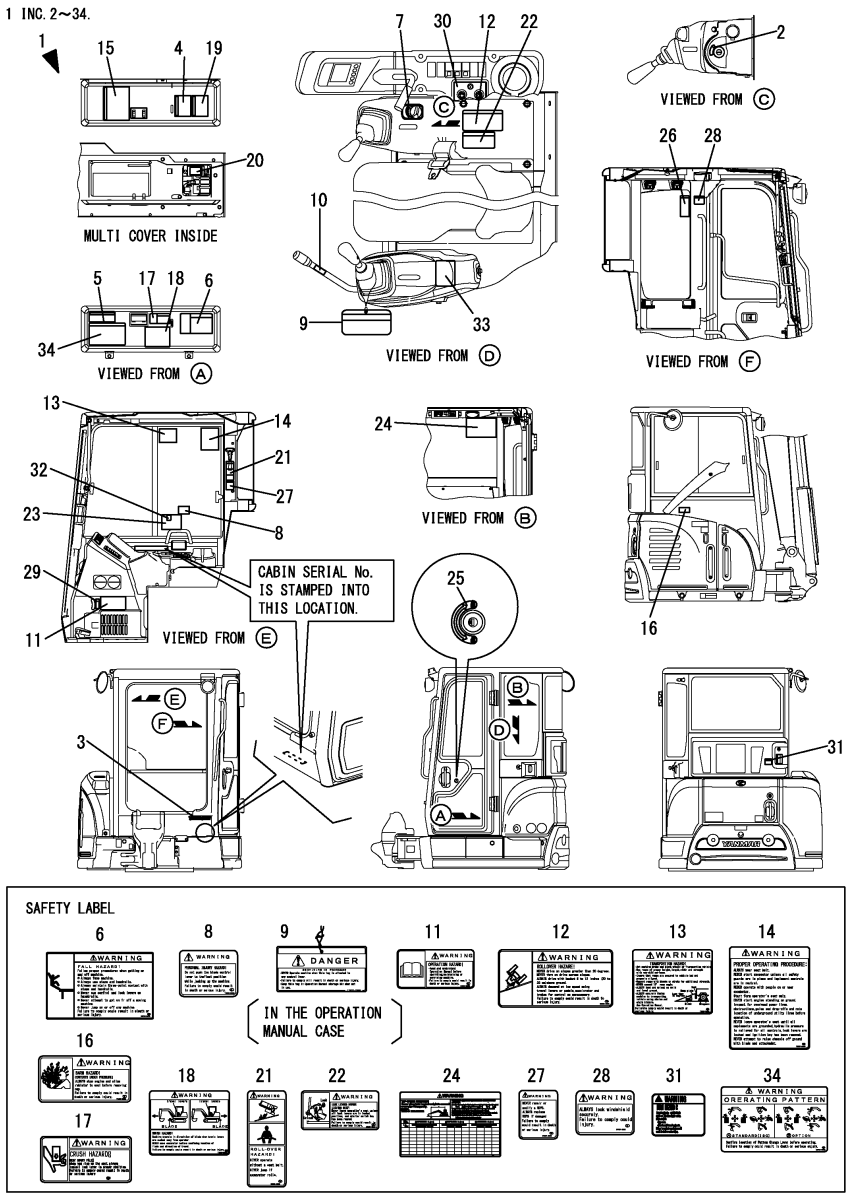

No.	Lev.	Parts No.	Description	Q'ty (A)	(B)	(C)	(D)	(E)	(F)	I	R
1	1	172B03-08531	LABEL SET,CAB US ANG		1						
2	2	172B03-03220	LABEL,SW		1						
3	2	172B16-03180	LABEL,BRANDLOGO 200		1						
4	2	172437-03242	LABEL, CRAWLER		1						1
5	2	172B03-03080	LABEL, SPEC US ANGLE		1						
6	2	172472-03141	LABEL, SUPPORT		1						
7	2	172A69-03220	LABEL,ACCELERATOR		1						
8	2	172A79-03220	LABEL,WARNING ANGLE		1						
9	2	172437-03252	TAG ASSY, CAUTION		1						
10	2	172183-03280	LABEL, LOCK		1						
11	2	172437-03302	LABEL, MANUAL		1						
12	2	172437-03312	LABEL, SLOPE		1						
13	2	172437-03343	LABEL, TRANSPORT		1						
14	2	172437-03372	LABEL, NEUTRAL		1						
15	2	172B03-03380	LABEL,OIL/WATER US		1						
16	2	172437-03391	LABEL, RADIATOR		1						
17	2	172B03-03410	LABEL,SEAT TILT UP		1						
18	2	172437-03432	LABEL, STEERING		1						
19	2	172B03-03430	LABEL,GREASING US		1						
20	2	172B03-03440	LABEL,FUSE BOX US		1						
21	2	172437-03451	LABEL, SEAT BELT		1						
22	2	172437-03471	LABEL, LEVER LOCK		1						
23	2	172B03-03670	LABEL, OPERATION ANG		1						
24	2	172B03-03680	LABEL,LIFT ANGLE		1						
25	2	172B03-03280	LABEL,DOOR KEY LOCK		1						
26	2	172463-03320	LABEL,F/W LOWER US		1						
27	2	172437-03441	LABEL, ROPS		1						
28	2	172437-03551	LABEL, WINDOW US		1						
29	2	172B03-03240	LABEL,AIR SELECT		1						
30	2	172B03-03250	LABEL,SW A/C		1						2
31	2	172B03-03420	LABEL,WARNING A/C US		1						2
32	2	172A79-03150	LABEL,PTO SWITCH		1						
33	2	172A47-03371	LABEL,PTO EX		1						
34	2	172437-03601	LABEL, 2-WAY US		1						

Remarks
* Exclusive figure for angle blade specification.
(1)Rubber crawler specification.
(2)Air Conditioner specification.

N:Old $\xleftarrow[\text{No}]{\text{Yes}}$ New, Q:Old $\xleftarrow[\text{Yes}]{\text{No}}$ New, R:Old $\xleftarrow[\text{Yes}]{\text{Yes}}$ New, S:Old $\xleftarrow[\text{No}]{\text{No}}$ New, W:Add, Z:Discontinued, F:Interchangeable by set, K:Q'ty Change

Copyright (C) YANMAR CO., LTD. All RightsReserved.

Fig.5. LABEL(QUICK COUPLER)

(A)=VIO35-6A P(US)
(B)=VIO35-6A C(US)
(C)=
(D)=
(E)=
(F)=

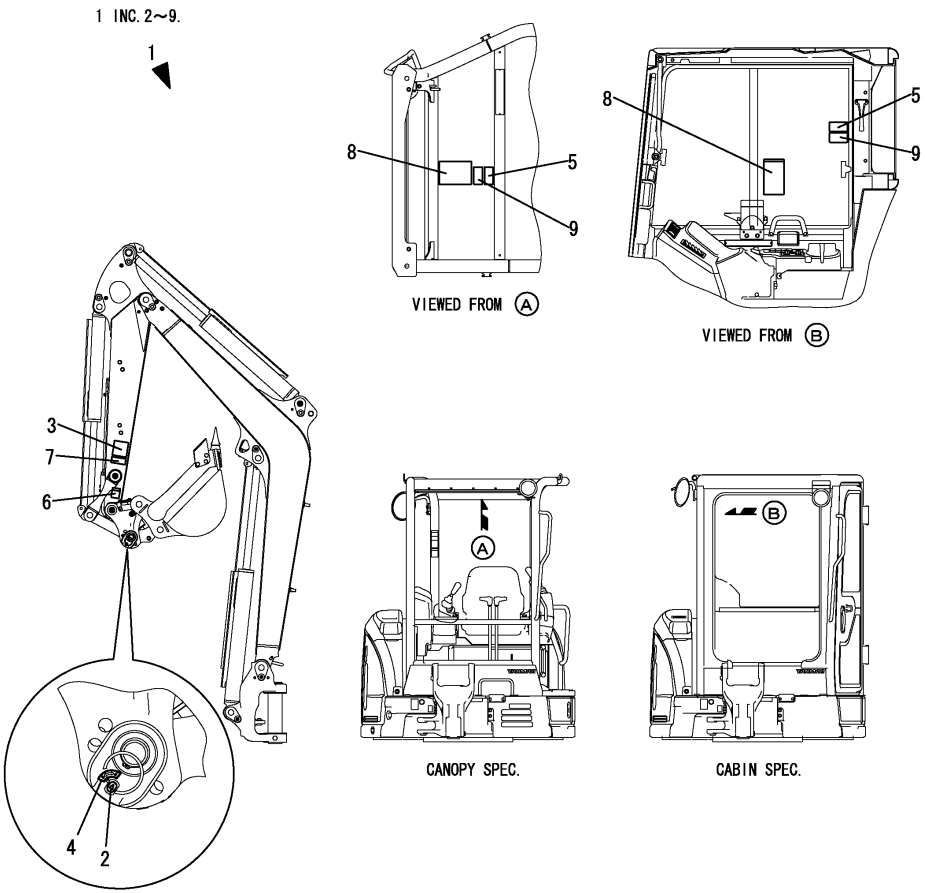

No.	Lev.	Parts No.	Description	Q'ty (A)	(B)	(C)	(D)	(E)	(F)	I	R
1	1	172B03-08200	LABEL SET,Q EX	1	1						
2	2	172958-03160	LABEL	1	1						
3	2	172472-03230	LABEL, OPERATION	1	1						
4	2	172458-03240	LABEL, LOCK	1	1						
5	2	172472-03241	LABEL, PINUS	1	1						
6	2	172472-03261	LABEL, FINGER	1	1						
7	2	172472-03330	LABEL, LOCK PIN	1	1						
8	2	172B03-04400	LABEL,WARNING HITCH	1	1						
9	2	172B03-04410	LABEL,SAND US	1	1						

SAFETY LABEL

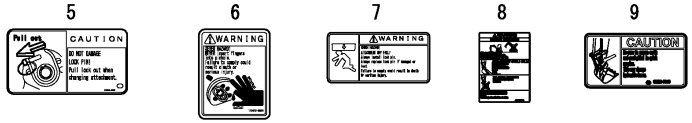

N:Old $\xleftarrow[\text{No}]{\text{Yes}}$ New, Q:Old $\xleftarrow[\text{Yes}]{\text{No}}$ New, R:Old $\xleftarrow[\text{Yes}]{\text{Yes}}$ New, S:Old $\xleftarrow[\text{No}]{\text{No}}$ New, W:Add, Z:Discontinued, F:Interchangeable by set, K:Q'ty Change

Copyright (C) YANMAR CO., LTD. All RightsReserved.

Fig.6. CASE(TOOL)

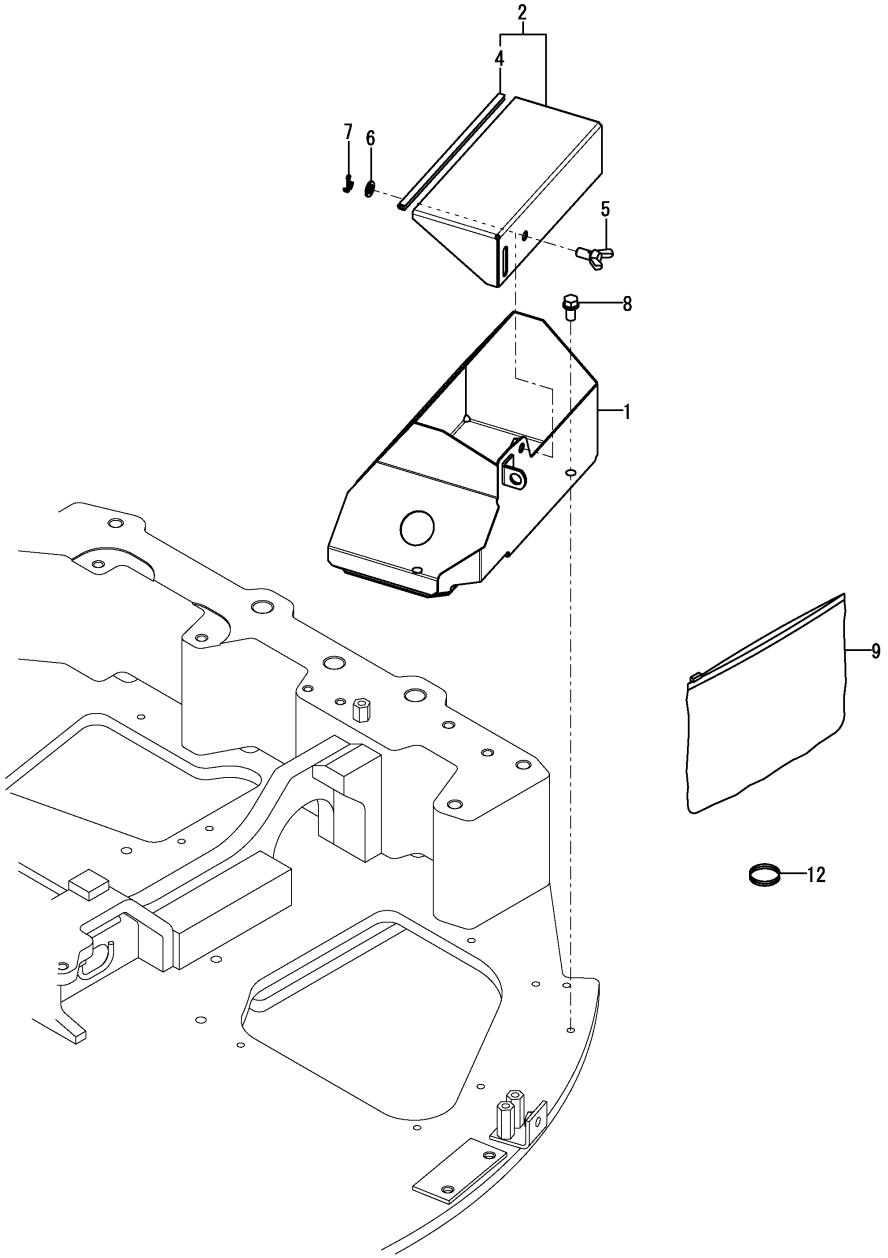

(A)=VIO35-6A P(US) (D)=
(B)=VIO35-6A C(US) (E)=
(C)= (F)=

No.	Lev.	Parts No.	Description	Q'ty (A)	(B)	(C)	(D)	(E)	(F)	I	R
1	1	172B03-05310	BOX ASSY, TOOL	1	1						
2	1	172B03-05360	PLATE ASSY, UP BOX	1	1						
4	2	172434-61200	TRIM, 245	1	1						
5	1	172142-62301	BOLT, WING	1	1						
6	1	22117-100000	WASHER, 10	1	1						
7	1	22417-250200	PIN, COTTER 2.5X20	1	1						
8	1	26013-100202	BOLT, SPRING M10X 20	2	2						
9	1	172176-07330	BAG, MANUAL	1	1						
9-1	1	172958-07330	CASE, MANUAL	1	1					N	
	(A=M61319)	(B=M61319)									
12	1	1C7100-99650	RING	1	1						

N:Old $\xleftrightarrow[\text{No}]{\text{Yes}}$ New, Q:Old $\xleftrightarrow[\text{Yes}]{\text{No}}$ New, R:Old $\xleftrightarrow[\text{Yes}]{\text{Yes}}$ New, S:Old $\xleftrightarrow[\text{No}]{\text{No}}$ New, W:Add, Z:Discontinued, F:Interchangeable by set, K:Q'ty Change

Copyright (C) YANMAR CO., LTD. All RightsReserved.

Fig.7. MUFFLER

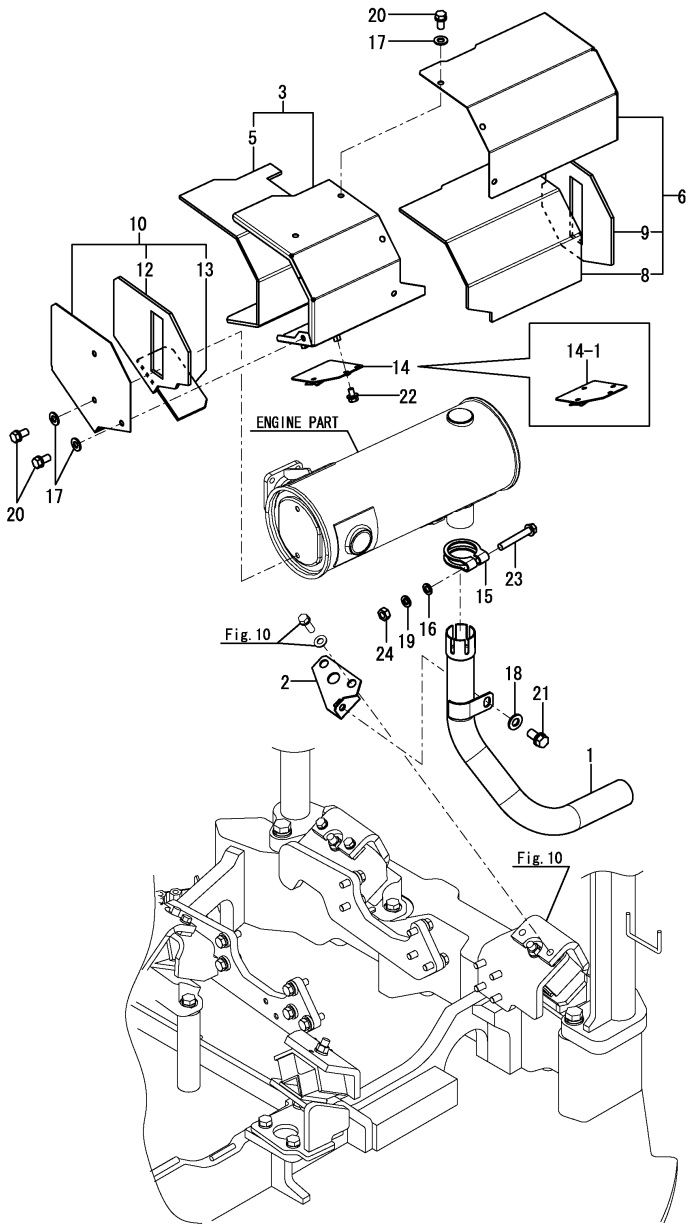

Remarks
(1)Attach the No.9A label to this part.
(2)Label is not illustrated.

(A)=VIO35-6A P(US) (D)=
(B)=VIO35-6A C(US) (E)=
(C)= (F)=

No.	Lev.	Parts No.	Description	Q'ty (A)	(B)	(C)	(D)	(E)	(F)	I	R
1	1	172B03-11350	PIPE ASSY, EXHAUST	1	1						
2	1	172B03-11380	BRACKET ASSY,EXHAUST	1	1						
3	1	172B03-11600	COVER ASSY, MUFFLER	1	1						
5	2	172B03-11640	SHEET, INSULATION	1	1						
6	1	172B03-11650	COVER ASSY, MUFFLER	1	1						1
8	2	172B03-11680	SHEET, INSULATION	1	1						
9	2	172B03-11690	SHEET, INSULATION	1	1						
9A	1	172B03-03390	LABEL,SILENCER EX	1	1						2
10	1	172B03-11700	COVER ASSY, MUFFLER	1	1						
12	2	172B03-11730	SHEET, INSULATION	1	1						
13	2	172B03-11740	SHEET, INSULATION	1	1						
14	1	172B03-11850	PLATE ASSY,CONNECTOR	1	1						
14-1	1	172B03-11851	PLATE ASSY,CONNECTOR	1	1					S	
	(A=MZZZZZ)	(B=MZZZZZ)									
15	1	121120-13580	CLAMP	1	1						
16	1	22117-100000	WASHER, 10	1	1						
17	1	22137-080000	WASHER, 8	8	8						
18	1	22137-100000	WASHER, 10	1	1						
19	1	22217-100000	WASHER, SPRING 10	1	1						
20	1	26013-080162	BOLT, M8X 16	8	8						
21	1	26013-100202	BOLT, M10X 20	1	1						
22	1	26014-060122	BOLT, M6X 12	2	2						
23	1	26106-100652	BOLT, M10X 65 PLATED	1	1						
24	1	26706-100002	NUT, M10	1	1						

N:Old $\xleftrightarrow[\text{No}]{\text{Yes}}$ New, Q:Old $\xleftrightarrow[\text{Yes}]{\text{No}}$ New, R:Old $\xleftrightarrow[\text{Yes}]{\text{Yes}}$ New, S:Old $\xleftrightarrow[\text{No}]{\text{No}}$ New, W:Add, Z:Discontinued, F:Interchangeable by set, K:Q'ty Change

Copyright (C) YANMAR CO., LTD. All RightsReserved.

Fig.8. AIR CLEANER

(A)=VIO35-6A P(US)
(B)=VIO35-6A C(US)
(C)=
(D)=
(E)=
(F)=

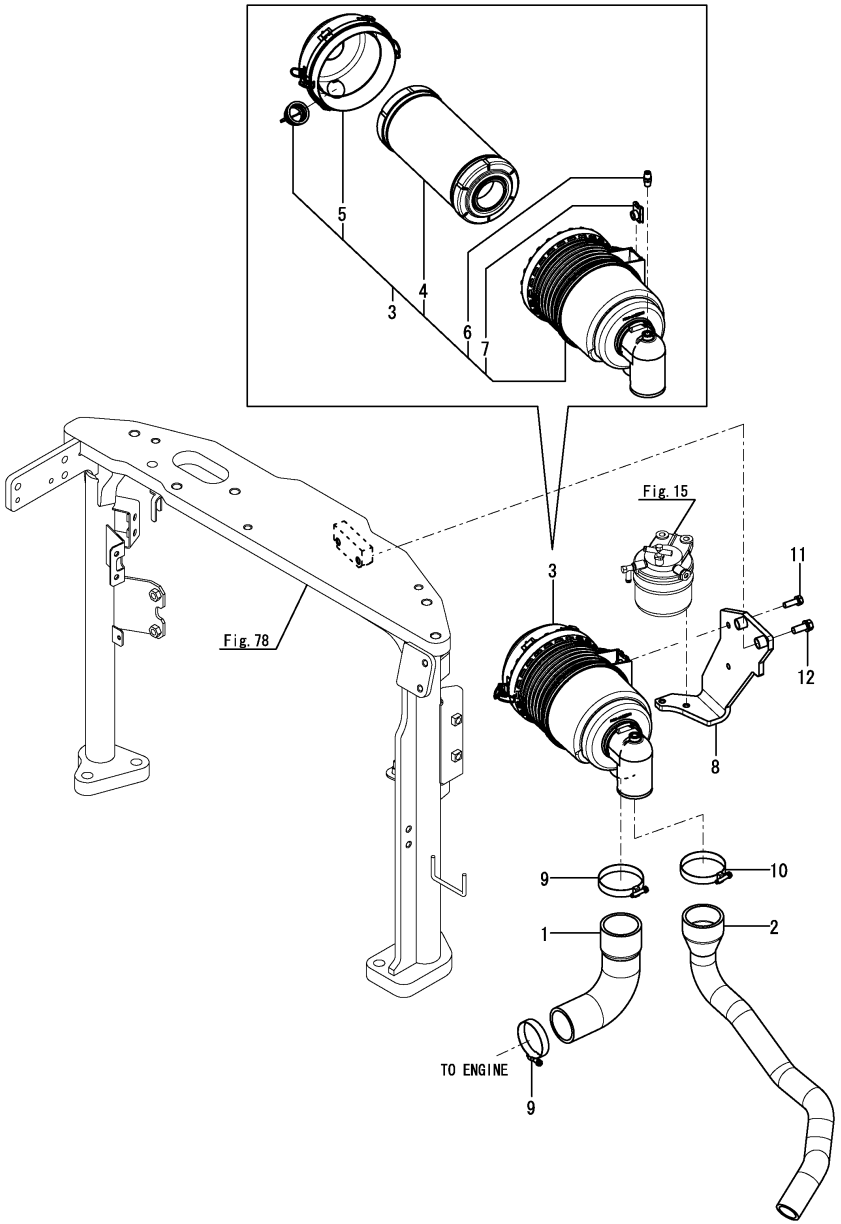

No.	Lev.	Parts No.	Description	Q'ty (A)	(B)	(C)	(D)	(E)	(F)	I	R
1	1	172B03-11510	HOSE, AIR CLEANER A	1	1						
2	1	172B03-11520	HOSE, AIR CLEANER B	1	1						
3	1	172B03-11530	CLEANER ASSY, AIR	1	1						
4	2	172B03-11540	ELEMENT	1	1						
5	2	172B03-11550	COVER ASSY	1	1						
6	2	172B03-11560	PLUG	1	1						
7	2	172B03-11570	NUT	2	2						
8	1	172B03-13180	BRACKET ASSY,A CL US	1	1						1
8A	1	172125-03951	LABEL, AIR CLEANER	1	1						2
9	1	23000-070000	CLAMP, 70	2	2						
10	1	23000-070000	CLAMP, 70	1	1						
11	1	26013-080252	BOLT, M8X 25	2	2						
11-1	1	26014-080252	BOLT, M8X 25	2	2					N	
	(A=MZZZZZ)	(B=MZZZZZ)									
12	1	26013-100402	BOLT, M10X 40	2	2						

Remarks
(1)Attach the No.8A label to this part.
(2)Label is not illustrated.

N:Old $\xleftarrow[\text{No}]{\text{Yes}}$ New, Q:Old $\xleftarrow[\text{Yes}]{\text{No}}$ New, R:Old $\xleftarrow[\text{Yes}]{\text{Yes}}$ New, S:Old $\xleftarrow[\text{No}]{\text{No}}$ New, W:Add, Z:Discontinued, F:Interchangeable by set, K:Q'ty Change

Copyright (C) YANMAR CO., LTD. All RightsReserved.

Fig.9. ACCELERATOR

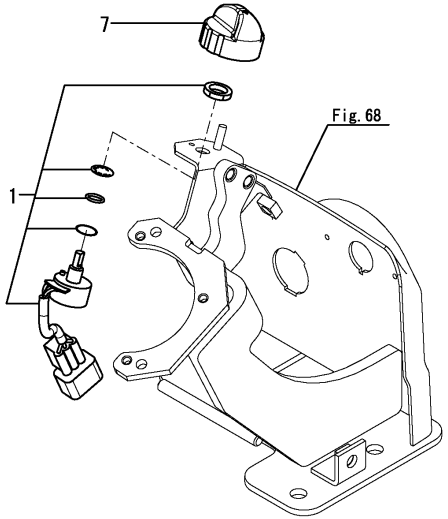

(A)=VIO35-6A P(US)
(B)=VIO35-6A C(US)
(C)=
(D)=
(E)=
(F)=

No.	Lev.	Parts No.	Description	Q'ty (A)	(B)	(C)	(D)	(E)	(F)	I	R
1	1	172A69-12100	VOLUME, ACCEL ASSY	1	1						
7	1	172A69-12120	KNOB ASSY	1	1						

N:Old $\overset{\text{Yes}}{\underset{\text{No}}{\leftrightarrow}}$ New, Q:Old $\overset{\text{No}}{\underset{\text{Yes}}{\leftrightarrow}}$ New, R:Old $\overset{\text{Yes}}{\underset{\text{Yes}}{\leftrightarrow}}$ New, S:Old $\overset{\text{No}}{\underset{\text{No}}{\leftrightarrow}}$ New, W:Add, Z:Discontinued, F:Interchangeable by set, K:Q'ty Change

Copyright (C) YANMAR CO., LTD. All RightsReserved.

Fig.10. ENGINE MOUNT

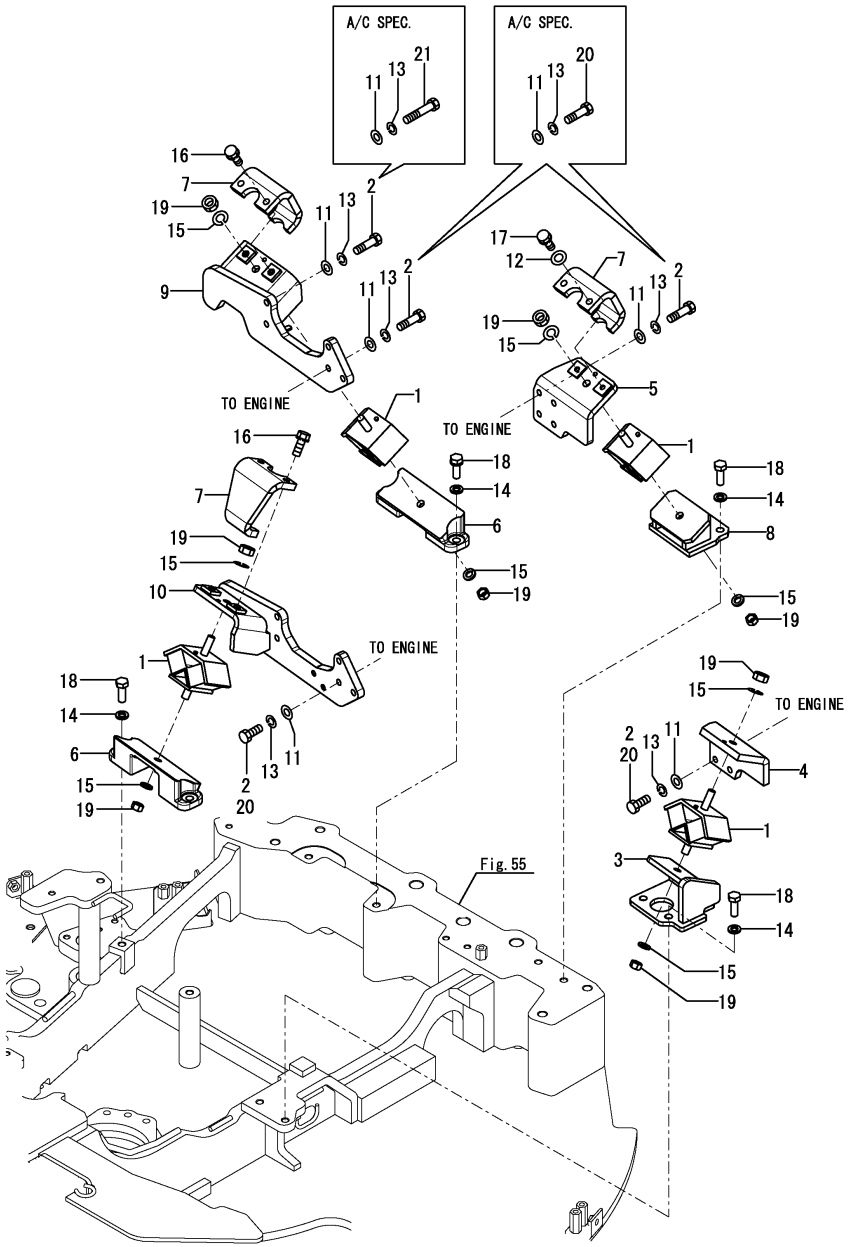

(A)=VIO35-6A P(US)
(B)=VIO35-6A C(US)
(C)=
(D)=
(E)=
(F)=

No.	Lev.	Parts No.	Description	Q'ty (A)	(B)	(C)	(D)	(E)	(F)	I	R
1	1	196420-02310	ABSORBER, SHOCK 230	4	4						
2	1	172A21-13100	BOLT	18	18						
3	1	172B03-13100	MOUNT ASSY, ENG L	1	1						
4	1	172175-13110-1	PLATE	1	1						
5	1	172490-13112	BRACKET ASSY,EN BR	1	1						
6	1	172458-13120-1	BRACKET, ENGINE	2	2						
7	1	172124-13230-5	STOPPER, ENGINE	3	3						
8	1	172B03-13230	MOUNT ASSY, ENG R	1	1						
9	1	172B03-13280	BRACKET ASSY, ENG FR	1	1						
10	1	172B03-13290	BRACKET ASSY, ENG FL	1	1						
11	1	172A79-72570	WASHER	18	18						
12	1	22137-100000	WASHER, 10	2	2					Z	
	(A=MZZZZZ)	(B=MZZZZZ)									
13	1	22217-100000	WASHER, SPRING 10	18	18						
14	1	22217-120000	WASHER, SPRING 12	8	8						
15	1	22217-120000	WASHER, SPRING 12	8	8						
16	1	26013-100252	BOLT, M10X 25	4	4						
17	1	26013-100302	BOLT, M10X 30	2	2						
18	1	26076-120352	BOLT, 10.912X 35	8	8						
19	1	26716-120002	NUT, M12	8	8						
20	1	172A21-13100	BOLT		17						1
21	1	26076-100502	BOLT, 10.910X 50		1						1

Remarks
(1)Air Conditioner specification.

N:Old $\xleftarrow[\text{No}]{\text{Yes}}$ New, Q:Old $\xleftarrow[\text{Yes}]{\text{No}}$ New, R:Old $\xleftarrow[\text{Yes}]{\text{Yes}}$ New, S:Old $\xleftarrow[\text{No}]{\text{No}}$ New, W:Add, Z:Discontinued, F:Interchangeable by set, K:Q'ty Change

Copyright (C) YANMAR CO., LTD. All RightsReserved.

Fig.11. RADIATOR SHURAUD

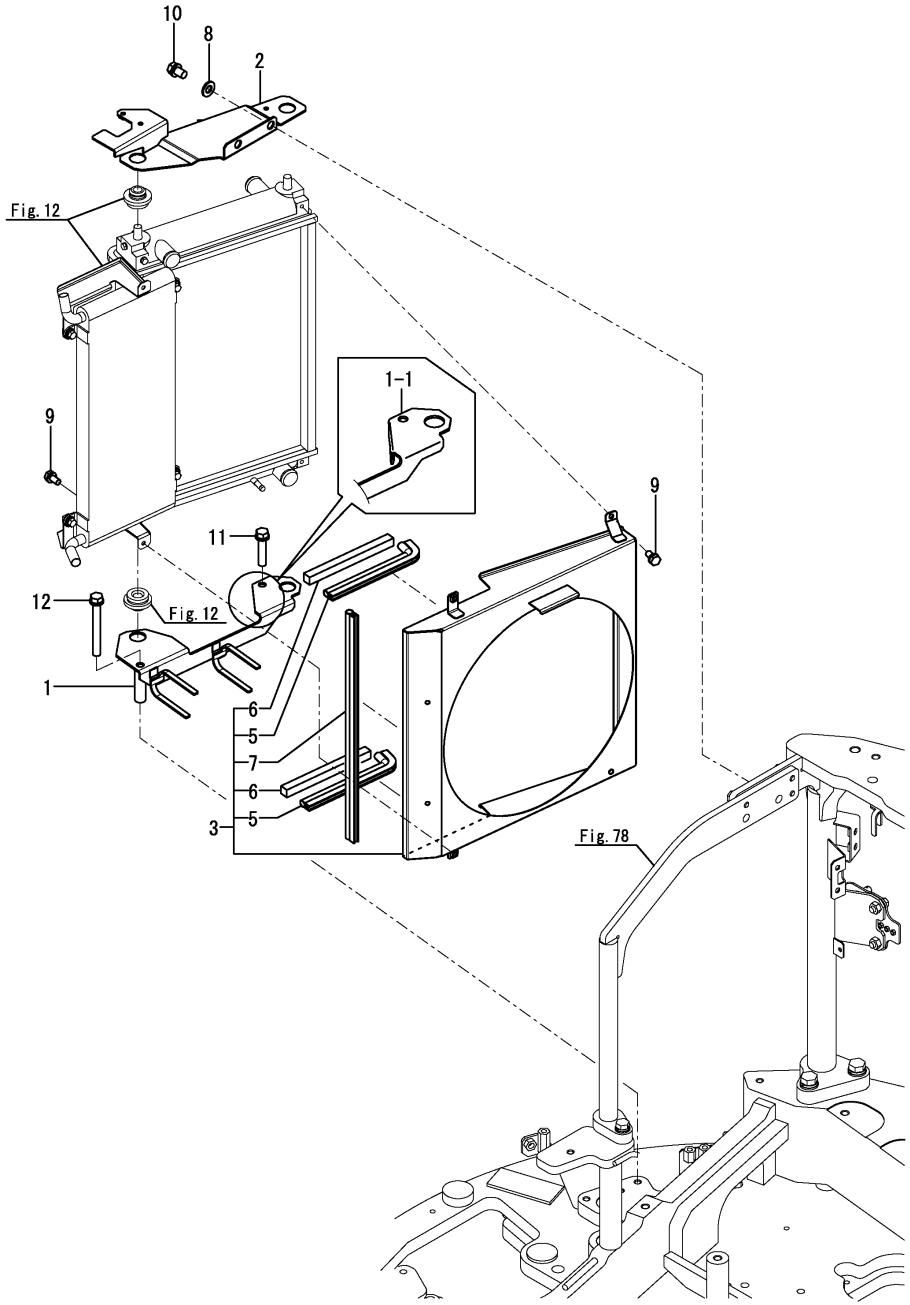

(A)=VIO35-6A P(US) (D)=
(B)=VIO35-6A C(US) (E)=
(C)= (F)=

No.	Lev.	Parts No.	Description	Q'ty (A)	(B)	(C)	(D)	(E)	(F)	I	R
1	1	172B03-13350	BRACKET ASSY, L RAD	1	1						
1-1	1	172B03-13351	BRACKET ASSY, L RAD	1	1					S	
	(A=MZZZZZ)	(B=MZZZZZ)									
2	1	172B03-13400	BRACKET ASSY, U RAD	1	1						
3	1	172B03-13900	SHROUD ASSY	1	1						
5	2	172B03-13970	RUBBER, SEAL 210	2	2						
6	2	172B03-13980	SEAL, 15X15X210	2	2						
7	2	172A69-19270	RUBBER, SEAL	1	1						
8	1	22137-100000	WASHER, 10	2	2						
9	1	26013-060122	BOLT, M6X 12	4	4						
10	1	26013-100162	BOLT, M10X 16	2	2						
11	1	26013-100452	BOLT, M10X 45	1	1						
12	1	26013-100852	BOLT, M10X 85	1	1						

N:Old $\frac{\text{Yes}}{\text{No}}$ New, Q:Old $\frac{\text{No}}{\text{Yes}}$ New, R:Old $\frac{\text{Yes}}{\text{Yes}}$ New, S:Old $\frac{\text{No}}{\text{No}}$ New, W:Add, Z:Discontinued, F:Interchangeable by set, K:Q'ty Change

Copyright (C) YANMAR CO., LTD. All RightsReserved.

Fig.12. RADIATOR & OIL COOLER

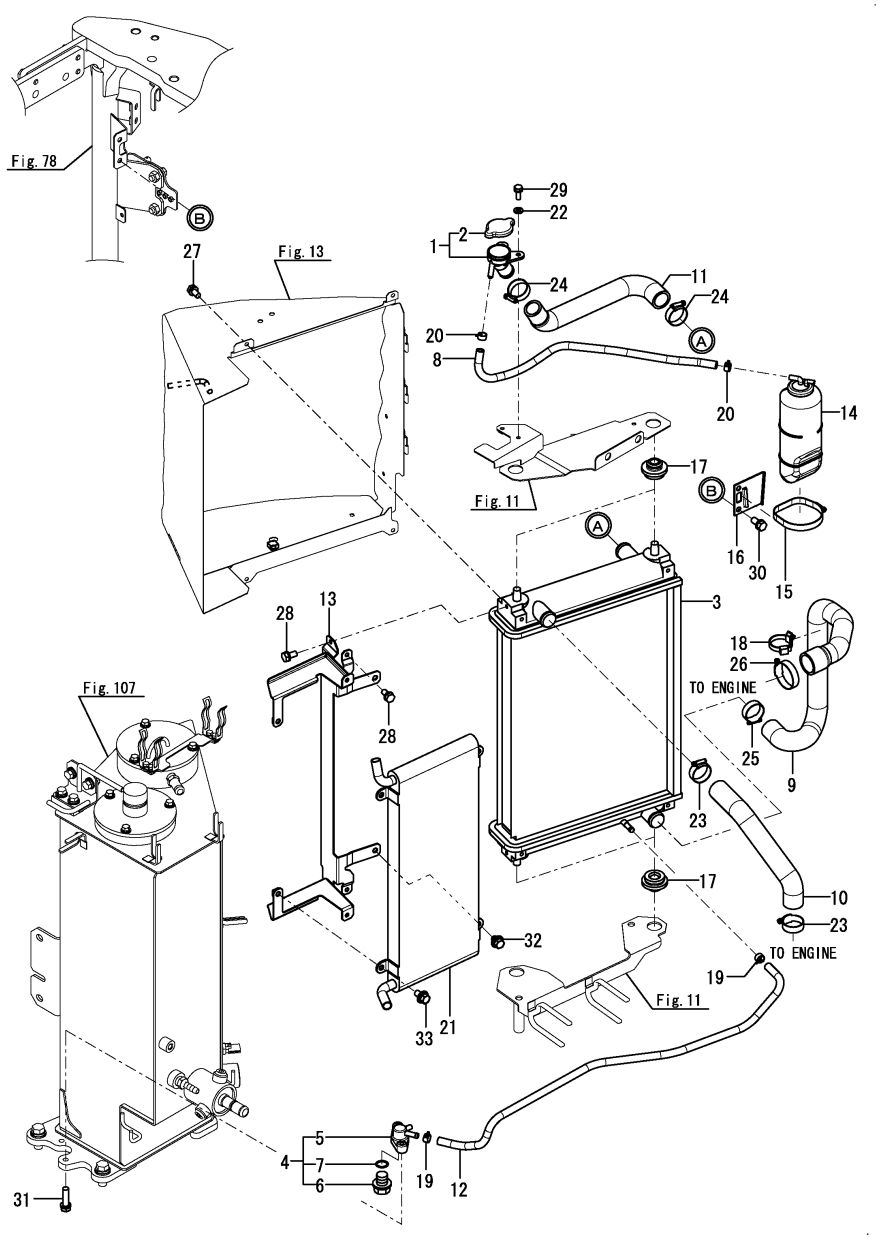

(A)=VIO35-6A P(US)
(B)=VIO35-6A C(US)
(C)=
(D)=
(E)=
(F)=

No.	Lev.	Parts No.	Description	Q'ty (A)	(B)	(C)	(D)	(E)	(F)	I	R
1	1	1D4105-11950	FILLER ASSY	1	1						
2	2	1D4105-11990	CAP, FILLER	1	1						
3	1	172B03-13160	RADIATOR ASSY	1	1						
4	1	172444-13210	COCK ASSY, 2-WAY	1	1						
5	2	172444-13220	BODY	1	1						
6	2	121250-49121	PLUG, DRAIN	1	1						
7	2	24311-000160	O-RING, 1AP16.0	1	1						
8	1	172122-13381	HOSE	1	1						
9	1	172B03-13550	HOSE, CW-T A	1	1						
10	1	172B03-13560	HOSE, CW-T B	1	1						
11	1	172B03-13570	HOSE, CW-T C	1	1						
12	1	172B03-13580	HOSE ASSY, 800	1	1						
13	1	172B03-13800	BRACKET ASSY, S	1	1						
14	1	129263-44510	TANK ASSY, SUB	1	1					1	
14A	1	172A38-03201	LABEL, SUB TANK	1	1					2	
15	1	124450-44550	BAND	1	1						
16	1	121256-44600	BRACKET, SUB TANK	1	1						
17	1	184015-44680	ABSORBER, SHOCK	4	4						
18	1	194680-51670	BAND, CLIP	1	1						
19	1	124766-59050	CLIP, HOSE 12	2	2						
20	1	124766-59050	CLIP, HOSE 12	2	2						
21	1	172B03-74800	COOLER ASSY, OIL	1	1						
22	1	22137-060000	WASHER, 6	2	2						
23	1	23001-041000	CLAMP, HOSE 41	2	2						
24	1	23001-041000	CLAMP, HOSE 41	2	2						
25	1	23001-041000	CLAMP, HOSE 41	1	1						
26	1	23001-048000	CLAMP, HOSE 48	1	1						
27	1	26013-060122	BOLT, M6X 12	4	4						
28	1	26013-060122	BOLT, M6X 12	4	4						
29	1	26013-060162	BOLT, M6X 16	2	2						
30	1	26013-080162	BOLT, M8X 16	2	2						
31	1	26013-080302	BOLT, M8X 30	2	2						
32	1	26014-080122	BOLT, M8X 12	2	2						
33	1	26014-080162	BOLT, M8X 16	2	2						

Remarks
(1)Attach the No.14A label to this part.
(2)Label is not illustrated.

N:Old $\frac{\text{Yes}}{\text{No}}$ New, Q:Old $\frac{\text{No}}{\text{Yes}}$ New, R:Old $\frac{\text{Yes}}{\text{Yes}}$ New, S:Old $\frac{\text{No}}{\text{No}}$ New, W:Add, Z:Discontinued, F:Interchangeable by set, K:Q'ty Change

Copyright (C) YANMAR CO., LTD. All RightsReserved.

Fig.13. DUCT

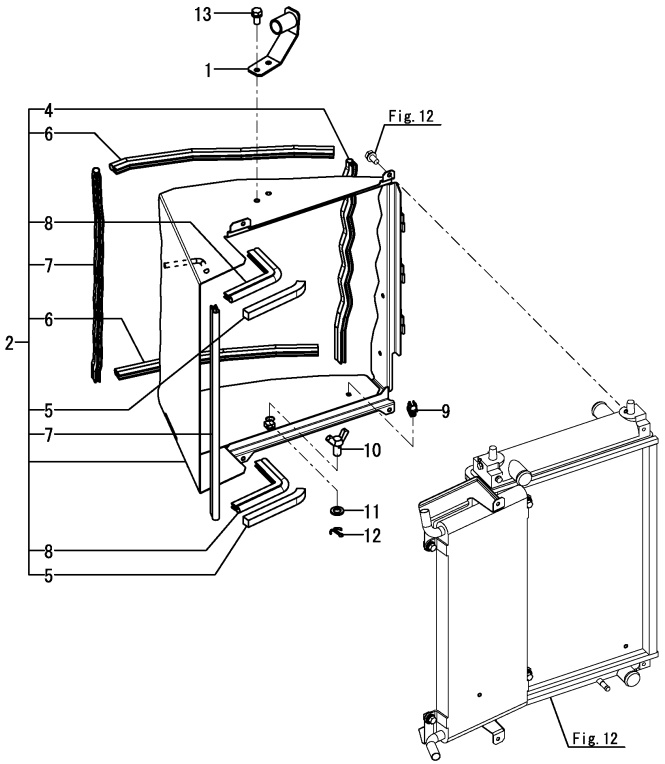

(A)=VIO35-6A P(US)
(B)=VIO35-6A C(US)
(C)=
(D)=
(E)=
(F)=

No.	Lev.	Parts No.	Description	Q'ty (A)	(B)	(C)	(D)	(E)	(F)	I	R
1	1	172B03-05250	PLATE ASSY,GREASE	1	1						
2	1	172B03-13600	DUCT ASSY	1	1						1
4	2	172B03-13700	SEAL, 480	1	1						
5	2	172B03-13710	SEAL, 130	2	2						
6	2	172A64-13760	SEAL	2	2						
7	2	172A69-19270	RUBBER, SEAL	2	2						
8	2	172A65-64840	SEAL, 190	2	2						
8A	1	172A38-03211	LABEL, ANTI-FREEZING	1	1						2
8B	1	172437-03361	LABEL, BATTERY	1	1						2
9	1	1A7400-61250	HOLDER, ROD 8	1	1						
10	1	172142-62301	BOLT, WING	1	1						
11	1	22117-100000	WASHER, 10	1	1						
12	1	22417-320200	PIN, COTTER 3.2X20	1	1						
13	1	26013-080162	BOLT, M8X 16	2	2						

Remarks
(1)Attach the No.8A & 8B label to this part.
(2)Label is not illustrated.

N:Old $\frac{\text{Yes}}{\text{No}}$ New, Q:Old $\frac{\text{No}}{\text{Yes}}$ New, R:Old $\frac{\text{Yes}}{\text{Yes}}$ New, S:Old $\frac{\text{No}}{\text{No}}$ New, W:Add, Z:Discontinued, F:Interchangeable by set, K:Q'ty Change

Copyright (C) YANMAR CO., LTD. All RightsReserved.

Fig.14. FUEL TANK

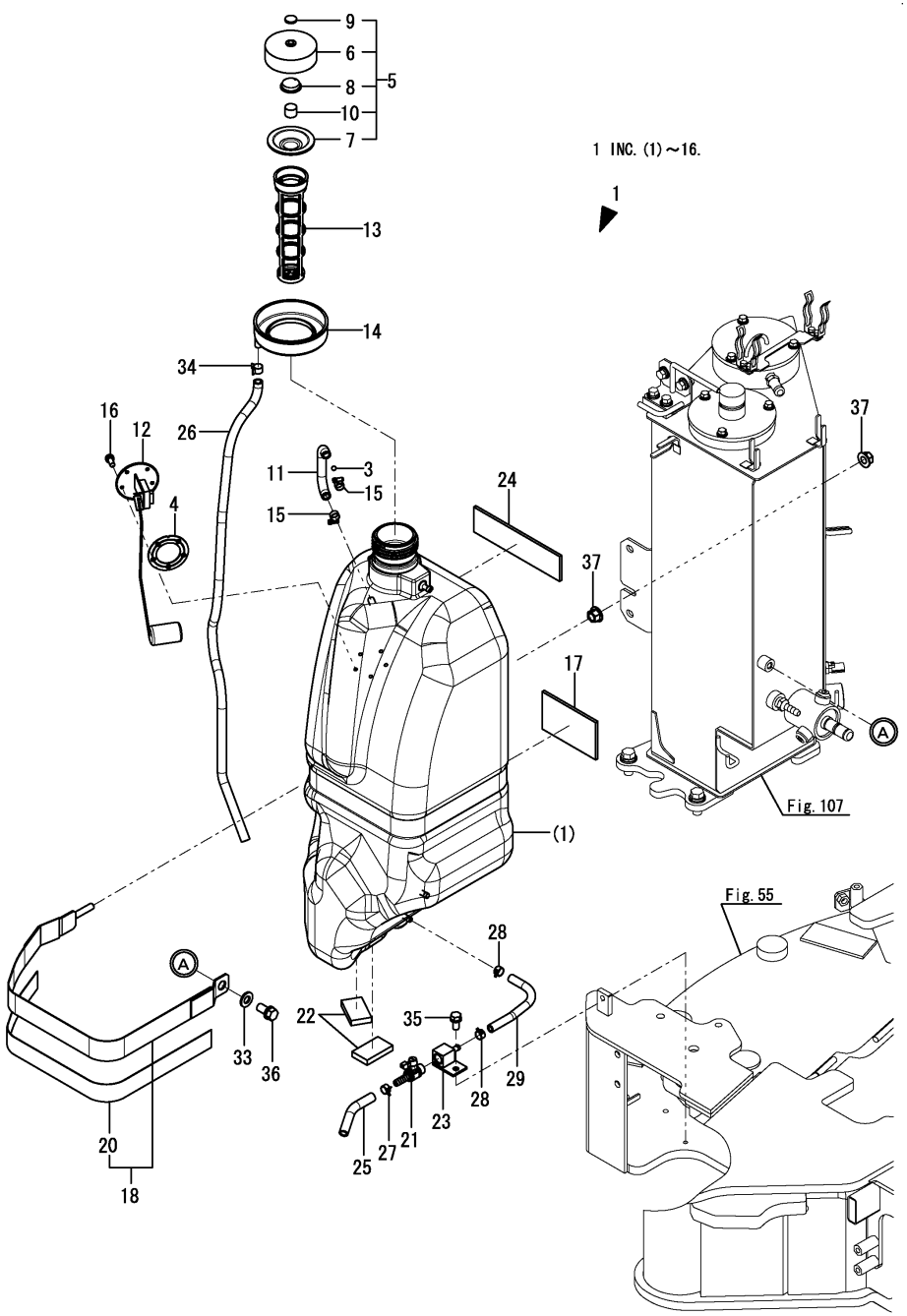

(A)=VIO35-6A P(US)
(B)=VIO35-6A C(US)
(C)=
(D)=
(E)=
(F)=

No.	Lev.	Parts No.	Description	Q'ty (A)	(B)	(C)	(D)	(E)	(F)	I	R
1	1	172B03-08390	TANK KIT,FUEL	1	1						
3	2	172447-14160	FLOAT	1	1						
4	2	172162-14200	GASKET	1	1						
5	2	172444-14200	CAP, FUEL	1	1						
6	3	172444-14450	CAP	1	1						
7	3	172444-14460	PACKING, RUBBER	1	1						
8	3	172444-14470	PACKING, RUBBER	1	1						
9	3	172444-14480	WASHER	1	1						
10	3	172444-14490	SPONGE	1	1						
11	2	172458-14203	HOSE, FUEL GAUGE	1	1						
12	2	172B03-14220	GAUGE, FUEL	1	1						
13	2	172B03-14250	STRAINER	1	1						
14	2	172458-14370	SUMP, FUEL	1	1						
15	2	23000-013000	CLAMP, 13	2	2						
16	2	26022-050122	SCREW, M5X12	5	5						
17	1	172444-14130	PLATE, RUBBER	1	1						
18	1	172B03-14150	CLAMP ASSY	1	1						
20	2	172B03-14200	RUBBER, CLAMP	1	1						
21	1	172A69-14230	VALVE, FUEL DRAIN	1	1						
22	1	172B03-14230	RUBBER	2	2						
23	1	172B03-14270	JOINT ASSY, DRAIN	1	1						
24	1	172458-14340	PLATE, RUBBER	1	1						
25	1	172444-14410	HOSE, DRAIN	1	1						
26	1	172A47-14520	HOSE	1	1						
27	1	106990-44660	CLIP, HOSE 12.5	1	1						
28	1	124766-59050	CLIP, HOSE 12	2	2						
29	1	184014-59640	HOSE	1	1						
33	1	22137-100000	WASHER, 10	1	1						
34	1	23080-013000	CLAMP, 13	1	1						
35	1	26013-080162	BOLT, M8X 16	1	1						
36	1	26013-100202	BOLT, M10X 20	1	1						
37	1	26367-100002	NUT, M10	2	2						

N:Old $\xleftarrow[\text{No}]{\text{Yes}}$ New, Q:Old $\xleftarrow[\text{Yes}]{\text{No}}$ New, R:Old $\xleftarrow[\text{Yes}]{\text{Yes}}$ New, S:Old $\xleftarrow[\text{No}]{\text{No}}$ New, W:Add, Z:Discontinued, F:Interchangeable by set, K:Q'ty Change

Copyright (C) YANMAR CO., LTD. All RightsReserved.

Fig.15. FUEL PIPING

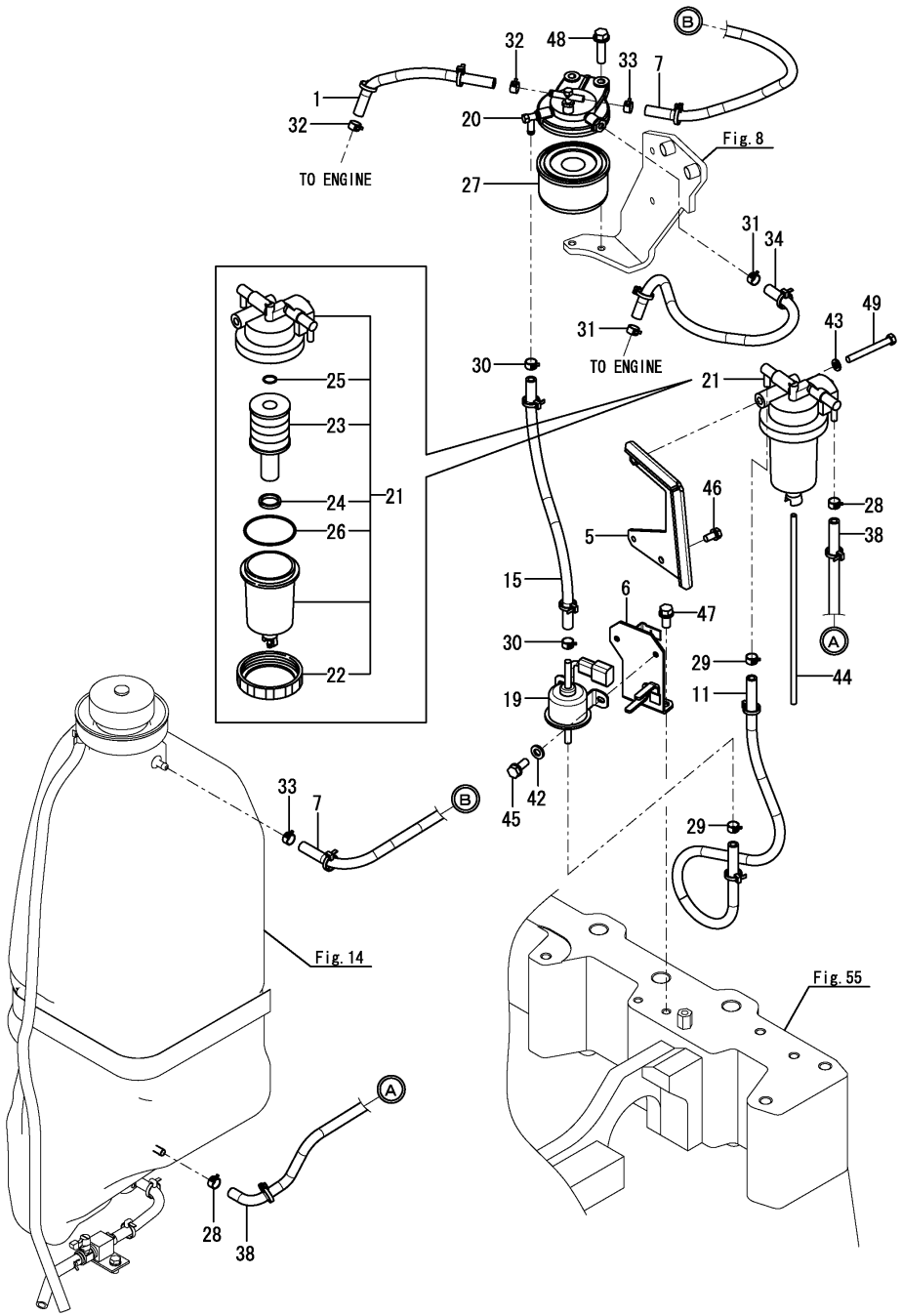

(A)=VIO35-6A P(US)
(B)=VIO35-6A C(US)
(C)=
(D)=
(E)=
(F)=

No.	Lev.	Parts No.	Description	Q'ty (A)	(B)	(C)	(D)	(E)	(F)	I	R
1	1	172A64-14250	HOSE ASSY,FO 260	1	1						
5	1	172B03-14300	BRACKET ASSY,WS	1	1						
6	1	172B03-14350	BRACKET ASSY, FP	1	1						
7	1	172A46-14601	HOSE ASSY, FUEL	1	1						
11	1	172B03-14610	HOSE ASSY, FO 600	1	1						
15	1	172448-14670	HOSE, FUEL	1	1						
19	1	129612-52100	PUMP ASSY, FUEL FEED	1	1						
20	1	129004-55612	BRACKET, FILTER	1	1						
21	1	184016-55701	SEPARATOR ASSY	1	1						
22	2	129100-55690	RING, RETAINING	1	1						
23	2	119802-55710	ELEMENT	1	1						
24	2	184016-55710	FLOAT	1	1						
25	2	24311-000160	O-RING, 1AP16.0	1	1						
26	2	24321-000650	O-RING, 1AG65.0	1	1						
27	1	119802-55810	FILTER,FO	1	1						
28	1	124766-59050	CLIP, HOSE 12	2	2						
29	1	124766-59050	CLIP, HOSE 12	2	2						
30	1	124766-59050	CLIP, HOSE 12	2	2						
31	1	124766-59050	CLIP, HOSE 12	2	2						
32	1	124766-59050	CLIP, HOSE 12	2	2						
33	1	124766-59050	CLIP, HOSE 12	2	2						
34	1	184012-59100	PIPE ASSY, FUEL	1	1						
38	1	184016-59300	PIPE ASSY, FUEL 1600	1	1						
42	1	22137-060000	WASHER, 6	2	2						
43	1	22217-080000	WASHER, SPRING 8	1	1						
44	1	23061-050300	PIPE, 5X 300	1	1						
45	1	26013-060162	BOLT, M6X 16	2	2						
46	1	26013-080162	BOLT, M8X 16	2	2						
47	1	26013-100202	BOLT, M10X 20	2	2						
48	1	26106-080302	BOLT, M8X 30 PLATED	2	2						
49	1	26116-080702	BOLT, M8X 70 PLATED	1	1						

N:Old $\xleftarrow[\text{No}]{\text{Yes}}$ New, Q:Old $\xleftarrow[\text{Yes}]{\text{No}}$ New, R:Old $\xleftarrow[\text{Yes}]{\text{Yes}}$ New, S:Old $\xleftarrow[\text{No}]{\text{No}}$ New, W:Add, Z:Discontinued, F:Interchangeable by set, K:Q'ty Change

Copyright (C) YANMAR CO., LTD. All RightsReserved.

Fig.16. BATTERY

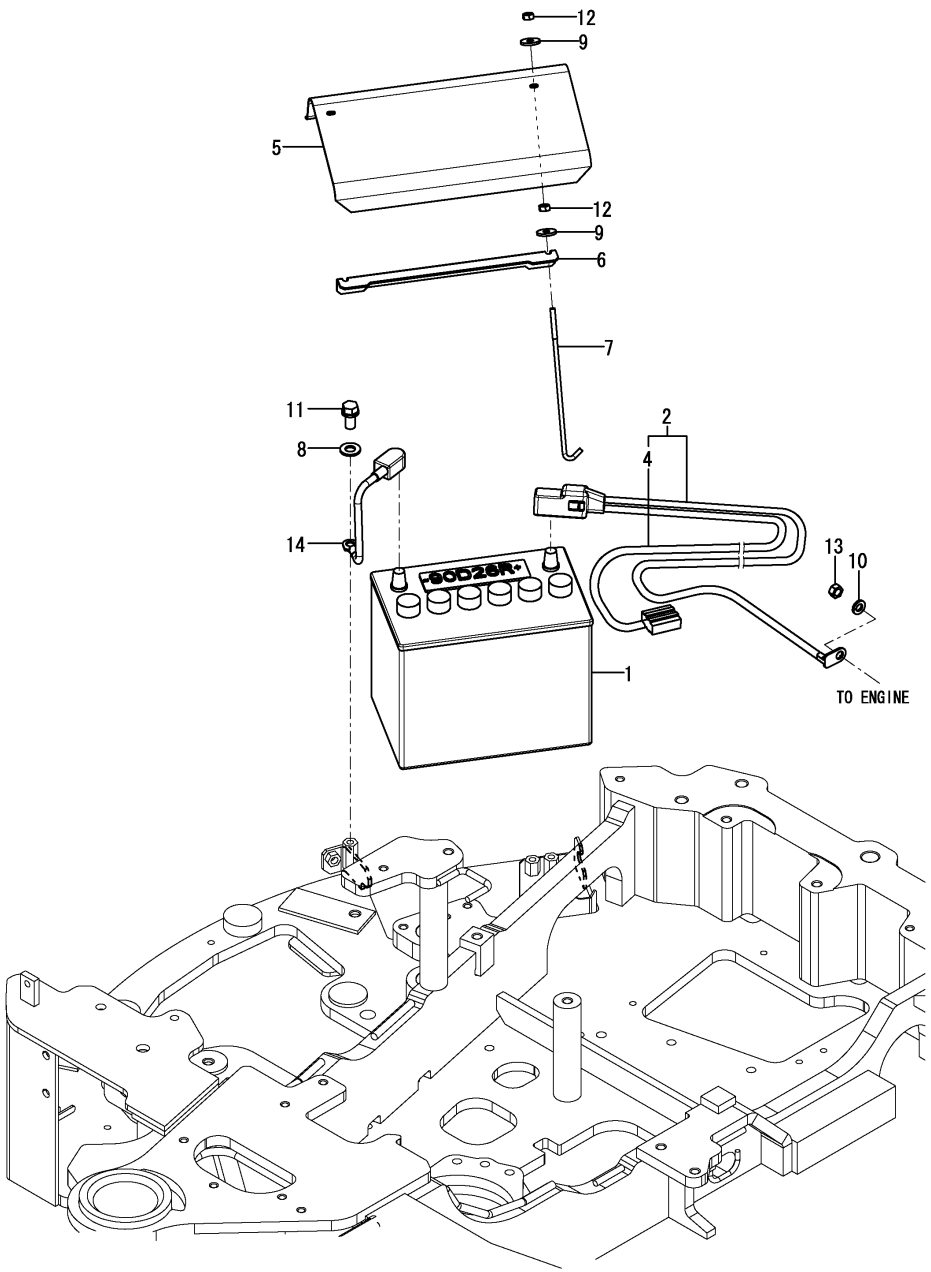

(A)=VIO35-6A P(US) (D)=
(B)=VIO35-6A C(US) (E)=
(C)= (F)=

No.	Lev.	Parts No.	Description	Q'ty (A)	(B)	(C)	(D)	(E)	(F)	I	R
1	1	172653-16100	BATTERY	1	1						
2	1	172B03-16100	CABLE ASSY, BATTERY	1	1						
4	2	172B03-16120	HARNESS, BATTERY +	1	1						
5	1	172B03-16160	COVER, BATTERY	1	1						
6	1	172B03-16180	CLAMP, BATTERY	1	1						
6-1	1	172B03-16181	CLAMP, BATTERY	1	1					N	
	(A=MZZZZZ)	(B=MZZZZZ)									
7	1	172631-16350	ROD, BATTERY CLAMP	2	2						
8	1	22137-100000	WASHER, 10	1	1						
9	1	22157-060000	WASHER, 6	4	4						
10	1	22217-080000	WASHER, SPRING 8	1	1						
11	1	26013-100202	BOLT, M10X 20	1	1						
12	1	26716-060002	NUT, M6	4	4						
13	1	26716-080002	NUT, M8	1	1						
14	1	172187-16110	CORD, BATTERY	1	1						

N:Old $\frac{\text{Yes}}{\text{No}}$ New, Q:Old $\frac{\text{No}}{\text{Yes}}$ New, R:Old $\frac{\text{Yes}}{\text{Yes}}$ New, S:Old $\frac{\text{No}}{\text{No}}$ New, W:Add, Z:Discontinued, F:Interchangeable by set, K:Q'ty Change

Copyright (C) YANMAR CO., LTD. All RightsReserved.

Fig.17. AROUND THE ENGINE(TO M61125)

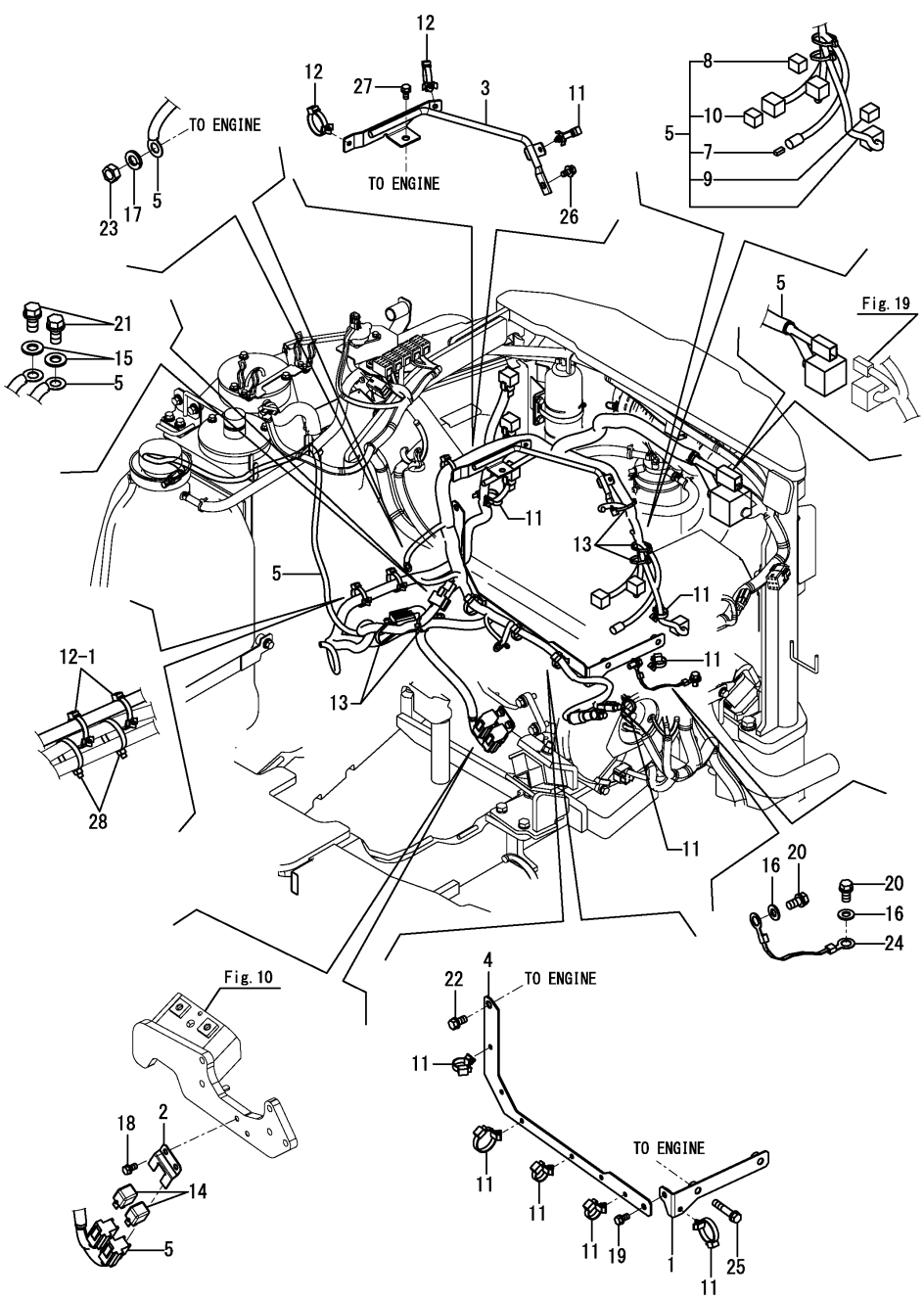

(A)=VIO35-6A P(US) (D)=
(B)=VIO35-6A C(US) (E)=
(C)= (F)=

No.	Lev.	Parts No.	Description	Q'ty (A)	(B)	(C)	(D)	(E)	(F)	I	R
1	1	172B03-11450	BRACKET ASSY, COVER	1	1						
2	1	172B03-16170	STAY, RELAY	1	1						
3	1	172B03-16300	STAY ASSY, HARNESS	1	1						
4	1	172B03-16440	SUPPORT, HARNESS	1	1						
5	1	172B03-16500	HARNESS ASSY,ENGINE	1	1						
7	2	172458-16550	FUSE, SLOWBLOW	1	1						
8	2	172A65-16550	FUSE, SLOWBLOW	1	1						
9	2	172447-17150	FUSE 40A	1	1						
10	2	198153-51700	FUSE, SLOW BLOW 80A	1	1						
11	1	194680-51670	BAND, CLIP	10	10						
12	1	194680-51670	BAND, CLIP	2	2						
12-1	1	194680-51670	BAND, CLIP	4	4					K	
	(A=MZZZZZ)	(B=MZZZZZ)									
13	1	194202-56460	BAND, 200	5	5						
14	1	129927-77920	RELAY	2	2						
15	1	22137-100000	WASHER, 10	2	2						
16	1	22137-100000	WASHER, 10	2	2						
17	1	22217-060000	WASHER, SPRING 6	1	1						
18	1	26013-080162	BOLT, M8X 16	2	2						
19	1	26013-080162	BOLT, M8X 16	1	1						
20	1	26013-100202	BOLT, M10X 20	2	2						
21	1	26013-100202	BOLT, M10X 20	2	2						
22	1	26013-100202	BOLT, M10X 20	1	1						
23	1	26716-060002	NUT, M6	1	1						
24	1	933171-15801	CORD, ENGINE EARTH	1	1						
25	1	26013-100502	BOLT, M10X 50	2	2						
26	1	26014-080162	BOLT, M8X 16	1	1						
27	1	26013-080162	BOLT, M8X 16	1	1						
28	1	194202-56460	BAND, 200	2	2					W	
	(A=MZZZZZ)	(B=MZZZZZ)									

N:Old $\frac{\text{Yes}}{\text{No}}$ New, Q:Old $\frac{\text{No}}{\text{Yes}}$ New, R:Old $\frac{\text{Yes}}{\text{Yes}}$ New, S:Old $\frac{\text{No}}{\text{No}}$ New, W:Add, Z:Discontinued, F:Interchangeable by set, K:Q'ty Change

Copyright (C) YANMAR CO., LTD. All RightsReserved.

Fig.190. (17A)AROUND THE ENGINE(FROM M61126)

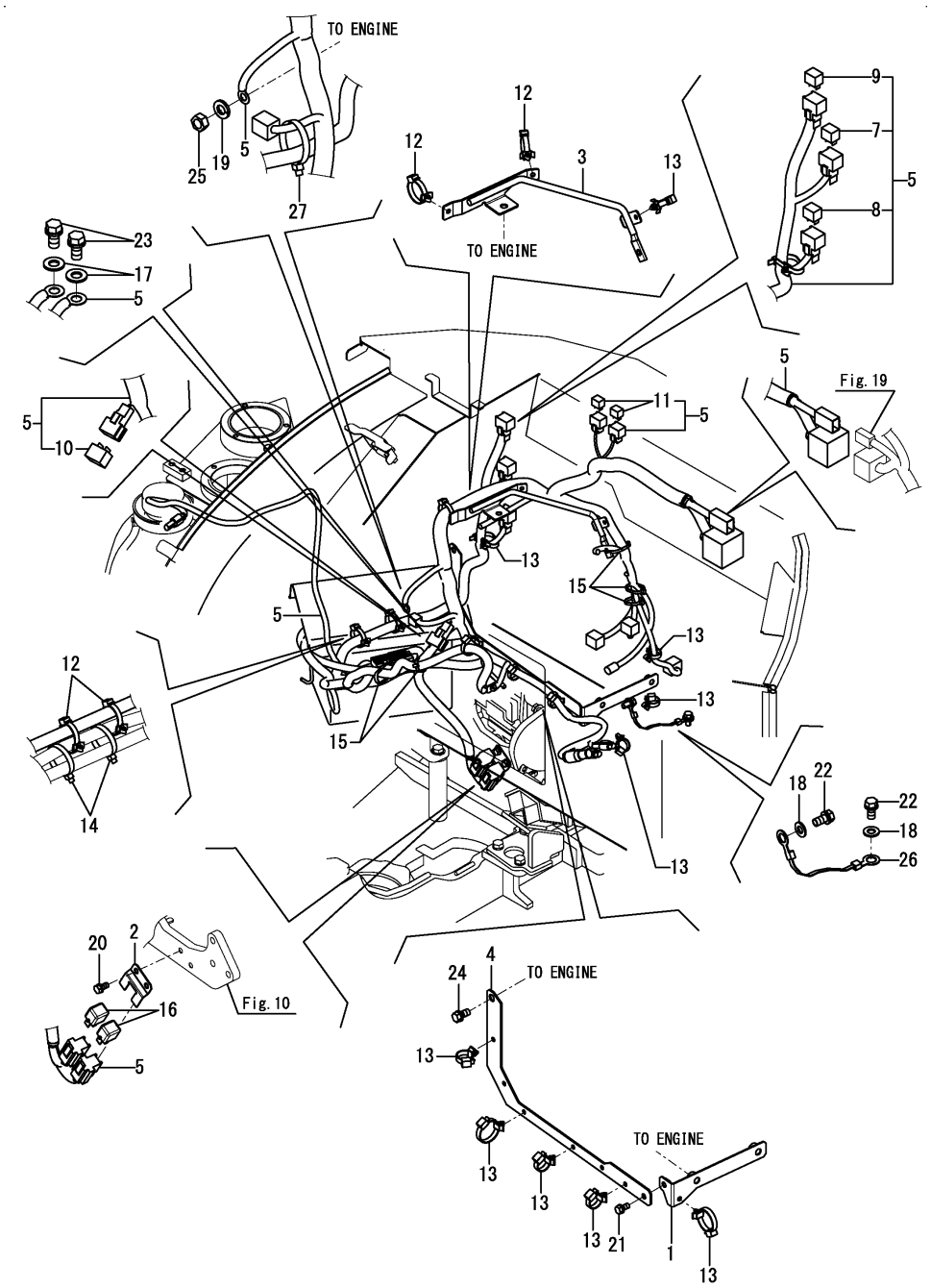

(A)=VIO35-6A P(US) (D)=
(B)=VIO35-6A C(US) (E)=
(C)= (F)=

No.	Lev.	Parts No.	Description	Q'ty (A)	(B)	(C)	(D)	(E)	(F)	I	R
1	1	172B03-11450	BRACKET ASSY, COVER	1	1						
2	1	172B03-16170	STAY, RELAY	1	1						
3	1	172B03-16300	STAY ASSY, HARNESS	1	1						
4	1	172B03-16440	SUPPORT, HARNESS	1	1						
5	1	172B03-16501	HARNESS ASSY,ENGINE	1	1						
5-1	1	172B03-16502	HARNESS ASSY,ENGINE	1	1					N	
	(A=*2014.12.)	(B=*2014.12.)									
7	2	172458-16550	FUSE, SLOWBLOW	1	1						
8	2	172A65-16550	FUSE, SLOWBLOW	1	1						
9	2	172447-17150	FUSE 40A	1	1						
10	2	198153-51700	FUSE, SLOW BLOW 80A	1	1						
11	2	1E8235-84910	DIODE, 090 3A	2	2						
12	1	194680-51670	BAND, CLIP	4	4						
13	1	194680-51670	BAND, CLIP	10	10						
14	1	194202-56460	BAND, 200	2	2						
15	1	194202-56460	BAND, 200	5	5						
16	1	129927-77920	RELAY	2	2						
17	1	22137-100000	WASHER, 10	2	2						
18	1	22137-100000	WASHER, 10	2	2						
19	1	22217-060000	WASHER, SPRING 6	1	1						
20	1	26013-080162	BOLT, M8X 16	2	2						
21	1	26013-080162	BOLT, M8X 16	1	1						
22	1	26013-100202	BOLT, M10X 20	2	2						
23	1	26013-100202	BOLT, M10X 20	2	2						
24	1	26013-100202	BOLT, M10X 20	1	1						
25	1	26716-060002	NUT, M6	1	1						
26	1	933171-15801	CORD, ENGINE EARTH	1	1						
27	1	194202-56460	BAND, 200	1	1					W	
	(A=*2015.01.)	(B=*2015.01.)									

N:Old $\frac{\text{Yes}}{\text{No}}$ New, Q:Old $\frac{\text{No}}{\text{Yes}}$ New, R:Old $\frac{\text{Yes}}{\text{Yes}}$ New, S:Old $\frac{\text{No}}{\text{No}}$ New, W:Add, Z:Discontinued, F:Interchangeable by set, K:Q'ty Change

Copyright (C) YANMAR CO., LTD. All RightsReserved.

Fig.18. HORN

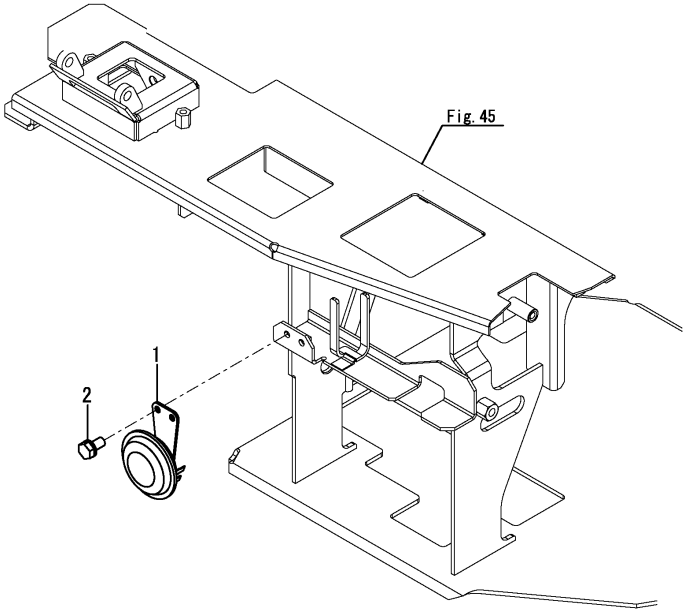

(A)=VIO35-6A P(US)
(B)=VIO35-6A C(US)
(C)=
(D)=
(E)=
(F)=

No.	Lev.	Parts No.	Description	Q'ty (A)	(B)	(C)	(D)	(E)	(F)	I	R
1	1	194151-57100	HORN	1	1						
2	1	26013-060122	BOLT, M6X 12	2	2						

N:Old $\xleftrightarrow[\text{No}]{\text{Yes}}$ New, Q:Old $\xleftrightarrow[\text{Yes}]{\text{No}}$ New, R:Old $\xleftrightarrow[\text{Yes}]{\text{Yes}}$ New, S:Old $\xleftrightarrow[\text{No}]{\text{No}}$ New, W:Add, Z:Discontinued, F:Interchangeable by set, K:Q'ty Change

Copyright (C) YANMAR CO., LTD. All RightsReserved.

Fig.19. SEAT MOUNT

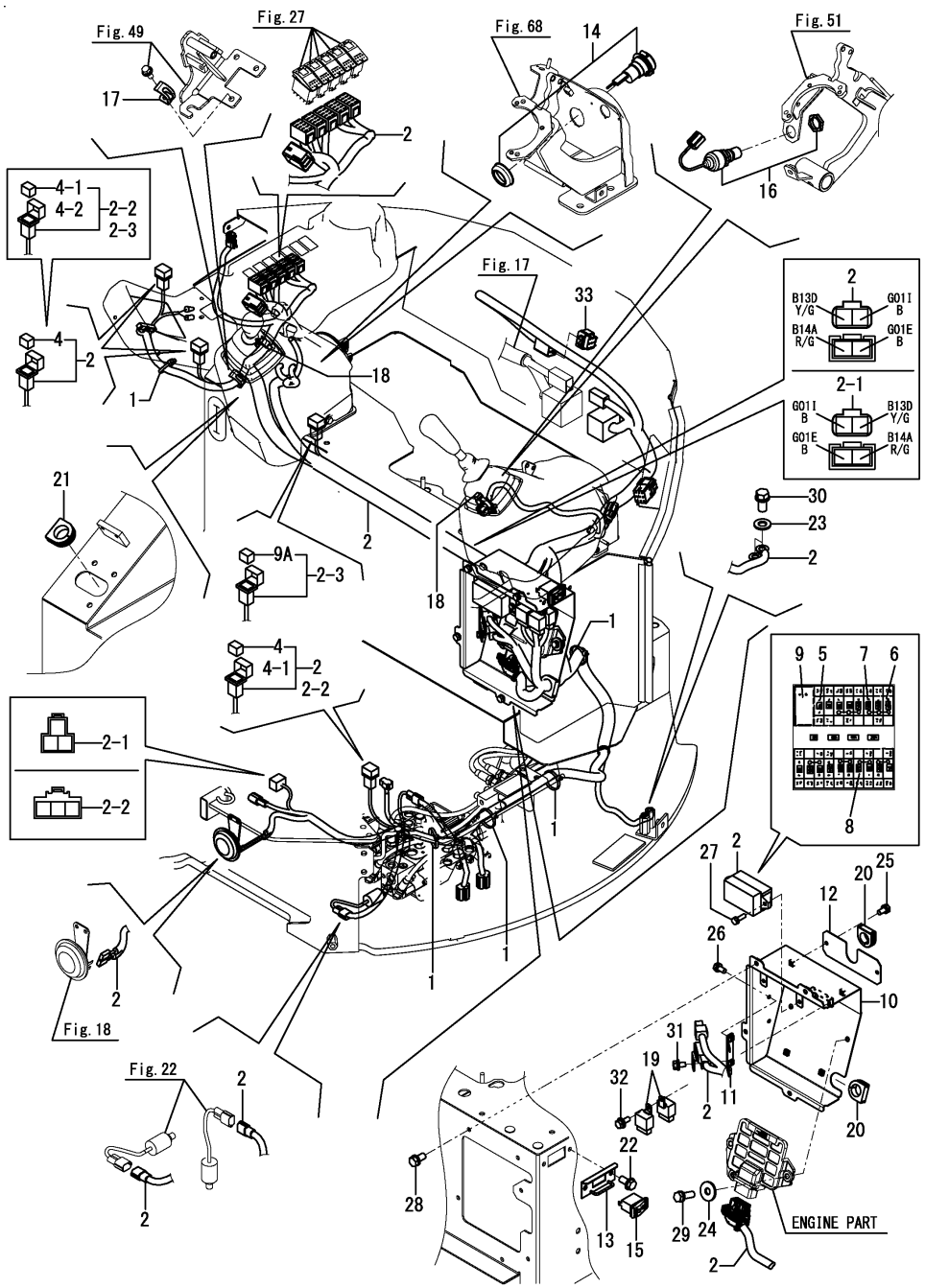

(A)=VIO35-6A P(US) (D)=
(B)=VIO35-6A C(US) (E)=
(C)= (F)=

No.	Lev.	Parts No.	Description	Q'ty (A)	(B)	(C)	(D)	(E)	(F)	I	R
1	1	172126-11510	BAND	5	5						
2	1	172B03-16520	HARNESS ASSY,SHEET	1	1						
2-1	1	172B03-16521	HARNESS ASSY,SHEET	1	1					S	
	(A=M61050)	(B=M61050)									
2-2	1	172B03-16580	HARNESS ASSY,SEAT EX	1	1					S	
	(A=M61135)	(B=M61135)									
2-3	1	172B03-16581	HARNESS ASSY,SEAT EX	1	1					N	
	(A=*2014.12.)	(B=*2014.12.)									
4	2	1A7130-51130	DIODE, 1.5A	3	3						
4-1	2	1A7130-51130	DIODE, 1.5A	2	2					K	
	(A=M61135)	(B=M61135)									
4-2	2	1A7130-51130	DIODE, 1.5A	1	1					K	
	(A=*2014.12.)	(B=*2014.12.)									
5	2	198535-52110	FUSE, 5A	9	9						
6	2	198535-52120	FUSE, 10A	4	4						
7	2	198535-52130	FUSE, 15A	5	5						
8	2	198535-52170	FUSE, 30A	4	4						
9	2	1E9570-83900	MINI FUSE PULLER	1	1						
9A	2	1E8235-84910	DIODE, 090 31	1	1					W	
	(A=*2014.12.)	(B=*2014.12.)									
10	1	172B03-17000	BOX ASSY,ELECTRIC	1	1						
11	1	172B03-17050	STAY ASSY, CONNECTOR	1	1						
11-1	1	172B03-17051	STAY ASSY,CONNECTOR	1	1					N	
	(A=M60564)	(B=M60564)									
12	1	172B03-17100	COVER, FUSE	1	1						
12-1	1	172B03-17110	COVER,FUSE	1	1					N	
	(A=M61328)	(B=M61328)									
13	1	172A89-17180	PLATE ASSY,SWITCH	1	1						
14	1	172A64-17250	SOCKET ASSY	1	1						
15	1	172A69-17260	SWITCH, ENGINE STOP	1	1						
16	1	1D4103-18300	SWITCH, PUSH	1	1						
17	1	194440-51620	CLAMP, B	1	1						
17-1	1	1A1686-57850	CLAMP, 80	1	1					N	
	(A=*2015.03.)	(B=*2015.03.)									
18	1	194680-51670	BAND, CLIP	2	2						
19	1	198461-52950	RELAY, CA TYPE C	4	4						
20	1	172165-62800	GROMMET	2	2						
21	1	172165-62800	GROMMET	1	1						
22	1	172519-63240	BOLT	2	2						
23	1	22137-100000	WASHER, 10	2	2						
24	1	22157-080000	WASHER, 8	2	2						
25	1	26013-060122	BOLT, SPRING M6X 12	2	2						
26	1	26013-060122	BOLT, SPRING M6X 12	2	2						
27	1	26013-060202	BOLT, SPRING M6X 20	2	2						
28	1	26013-080162	BOLT, SPRING M8X 16	4	4						
29	1	26013-080252	BOLT, SPRING M8X 25	2	2						
30	1	26013-100202	BOLT, SPRING M10X 20	2	2						
31	1	26014-060122	BOLT, M6X 12	1	1						
32	1	26014-060162	BOLT, M6X 16	2	2						
33	1	172B03-16880	CONNECTOR, 12P	1	1						

N:Old $\frac{\text{Yes}}{\text{No}}$ New, Q:Old $\frac{\text{No}}{\text{Yes}}$ New, R:Old $\frac{\text{Yes}}{\text{Yes}}$ New, S:Old $\frac{\text{No}}{\text{No}}$ New, W:Add, Z:Discontinued, F:Interchangeable by set, K:Q'ty Change

Copyright (C) YANMAR CO., LTD. All RightsReserved.

Fig.20. GUIDE HARNESS

(A)=VIO35-6A P(US)
(B)=VIO35-6A C(US)
(C)=
(D)=
(E)=
(F)=

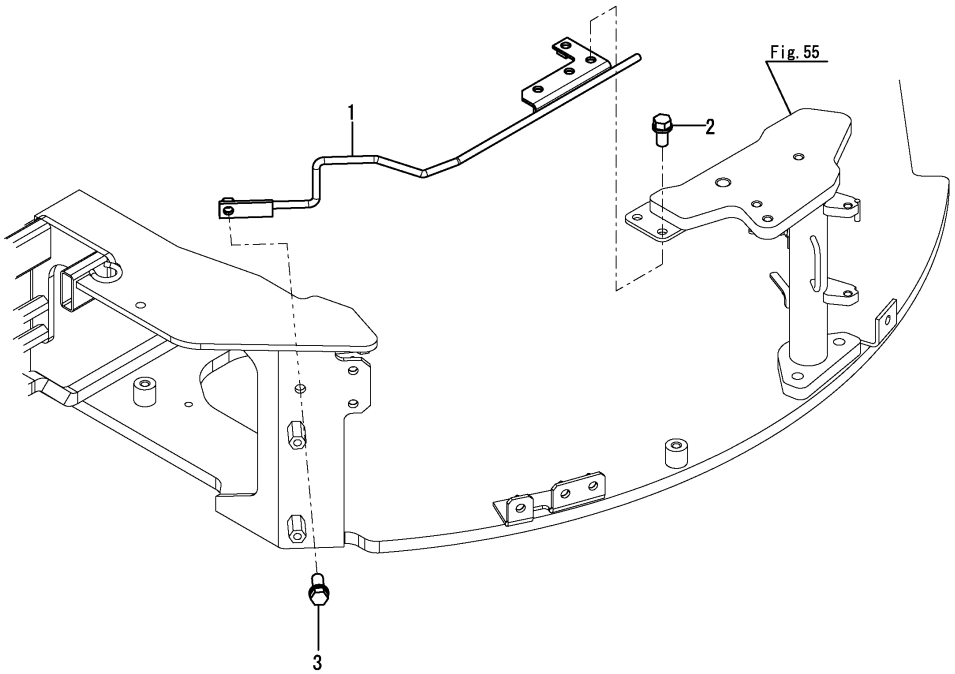

No.	Lev.	Parts No.	Description	Q'ty (A)	(B)	(C)	(D)	(E)	(F)	I	R
1	1	172B03-16950	GUIDE ASSY, HARNESS	1	1						
2	1	26013-100202	BOLT, M10X 20	2	2						
3	1	26013-100252	BOLT, M10X 25	1	1						

N:Old ◄Yes/No► New, Q:Old ◄No/Yes► New, R:Old ◄Yes/Yes► New, S:Old ◄No/No► New, W:Add, Z:Discontinued, F:Interchangeable by set, K:Q'ty Change

Copyright (C) YANMAR CO., LTD. All RightsReserved.

Fig.21. STARTER SWITCH

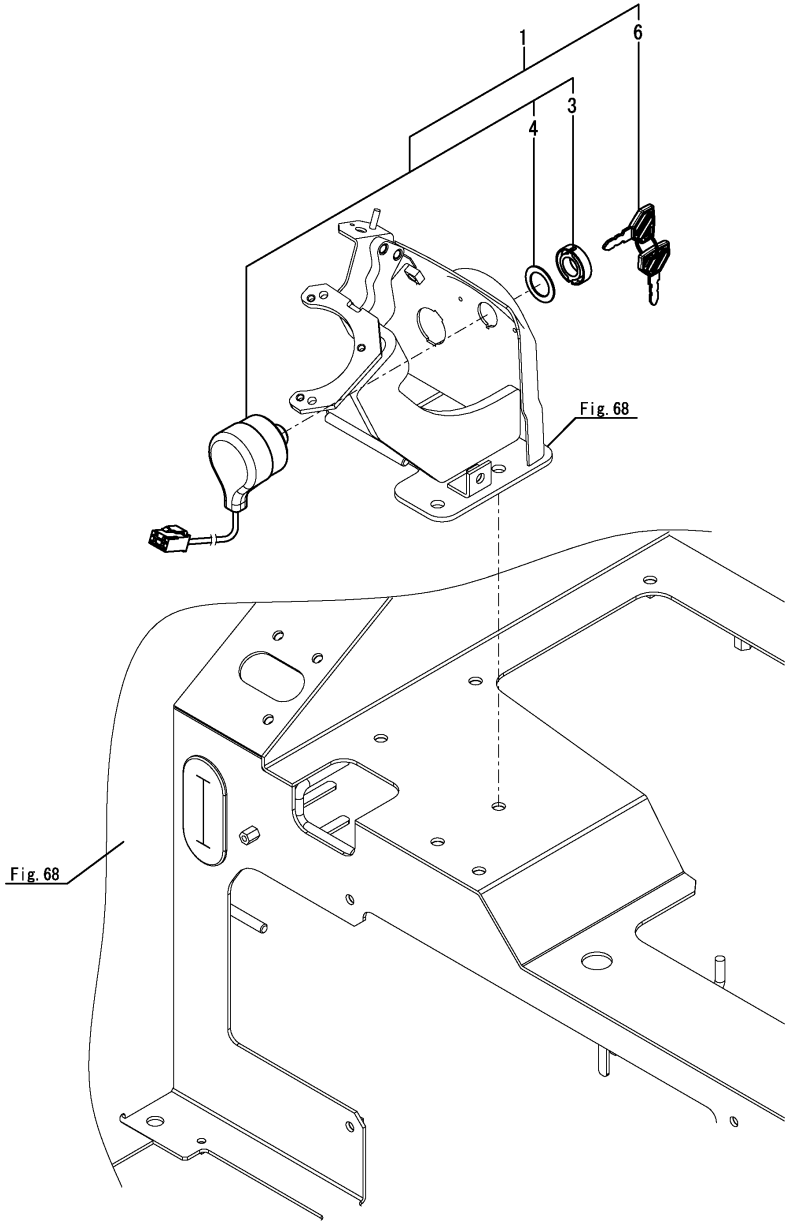

(A)=VIO35-6A P(US)
(B)=VIO35-6A C(US)
(C)=
(D)=
(E)=
(F)=

No.	Lev.	Parts No.	Description	Q'ty (A)	(B)	(C)	(D)	(E)	(F)	I	R
1	1	194940-52110	SWITCH, STARTING	1	1						
3	3	198360-52320	NUT, RING	1	1						
4	3	198360-52330	WASHER	1	1						
6	2	198360-52160	KEY ASSY	1	1						

N:Old $\xleftrightarrow[\text{No}]{\text{Yes}}$ New, Q:Old $\xleftrightarrow[\text{Yes}]{\text{No}}$ New, R:Old $\xleftrightarrow[\text{Yes}]{\text{Yes}}$ New, S:Old $\xleftrightarrow[\text{No}]{\text{No}}$ New, W:Add, Z:Discontinued, F:Interchangeable by set, K:Q'ty Change

Copyright (C) YANMAR CO., LTD. All RightsReserved.

Fig.22. ELECTRIC PARTS(A/D)

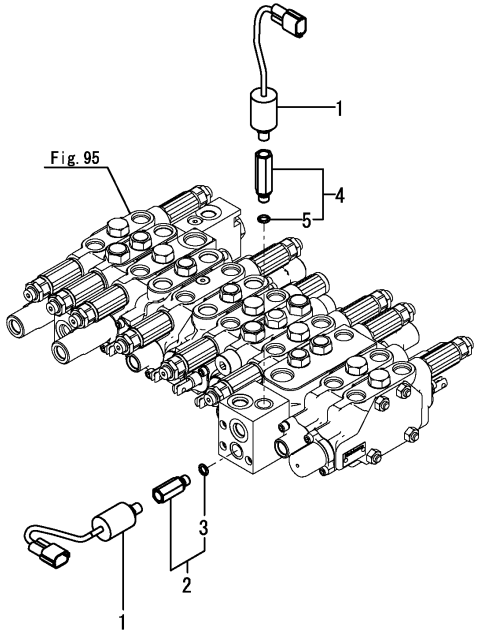

(A)=VIO35-6A P(US)
(B)=VIO35-6A C(US)
(C)=
(D)=
(E)=
(F)=

No.	Lev.	Parts No.	Description	Q'ty (A)	(B)	(C)	(D)	(E)	(F)	I	R
1	1	172478-17201	SWITCH, PRESSURE	2	2						
2	1	172A47-76111	CONNECTOR, G1/8XR1/8	1	1						
3	2	24315-000080	O-RING, 1BP8.0	1	1						
4	1	172A79-76110	CONNECTOR, G1/8XR1/8	1	1						
5	2	24315-000080	O-RING, 1BP8.0	1	1						

N:Old $\frac{\text{Yes}}{\text{No}}$ New, Q:Old $\frac{\text{No}}{\text{Yes}}$ New, R:Old $\frac{\text{Yes}}{\text{Yes}}$ New, S:Old $\frac{\text{No}}{\text{No}}$ New, W:Add, Z:Discontinued, F:Interchangeable by set, K:Q'ty Change

Copyright (C) YANMAR CO., LTD. All RightsReserved.

Fig.23. TRAVEL BUZZER

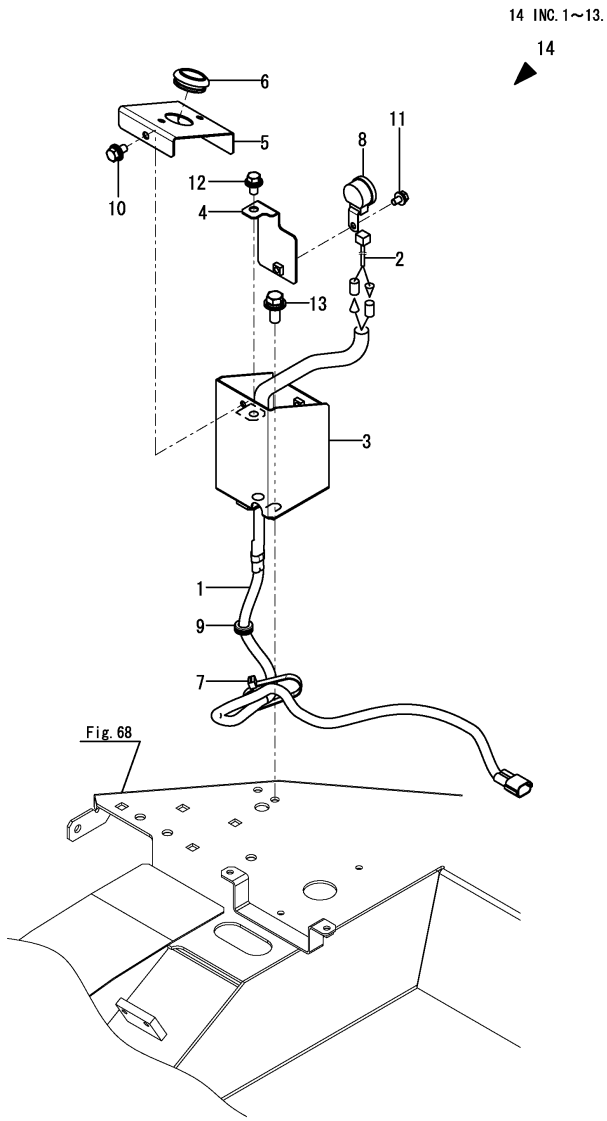

(A)=VIO35-6A P(US) (D)=
(B)=VIO35-6A C(US) (E)=
(C)= (F)=

No.	Lev.	Parts No.	Description	Q'ty (A)	(B)	(C)	(D)	(E)	(F)	I	R
1	1	172B03-16560	HARNESS,TRA-BUZZER	1	1						
2	1	172B03-16570	HARNESS,BUZZER	1	1						
3	1	172B03-16740	BRACKET ASSY,BUZZUR	1	1						
4	1	172B03-16760	BRACKET ASSY	1	1						
5	1	172B03-16890	PLATE,TRAVEL	1	1						
6	1	172456-53700	GROMMET	1	1						
7	1	194202-56460	BAND, 200	2	2						
8	1	198071-57110	BUZZER, BACK	1	1						
9	1	172162-61850	GROMMET	1	1						
10	1	26014-060122	BOLT, M6X 12	2	2						
11	1	26014-060162	BOLT, M6X 16	1	1						
12	1	26014-080162	BOLT, M8X 16	1	1						
13	1	26014-080202	BOLT, M8X 20	2	2						
14	1	172B03-08350	ALARM KIT,TRAVEL	1	1					W	1
	(A=MXXXXX)	(B=MXXXXX)									

Remarks
(1)Refer No.14 includes No.13 from No.1.

N:Old $\xleftrightarrow[\text{No}]{\text{Yes}}$ New, Q:Old $\xleftrightarrow[\text{Yes}]{\text{No}}$ New, R:Old $\xleftrightarrow[\text{Yes}]{\text{Yes}}$ New, S:Old $\xleftrightarrow[\text{No}]{\text{No}}$ New, W:Add, Z:Discontinued, F:Interchangeable by set, K:Q'ty Change

Copyright (C) YANMAR CO., LTD. All RightsReserved.

Fig.24. QUICK COUPLER(SWITCH BOX)

(A)=VIO35-6A P(US) (D)=
(B)=VIO35-6A C(US) (E)=
(C)= (F)=

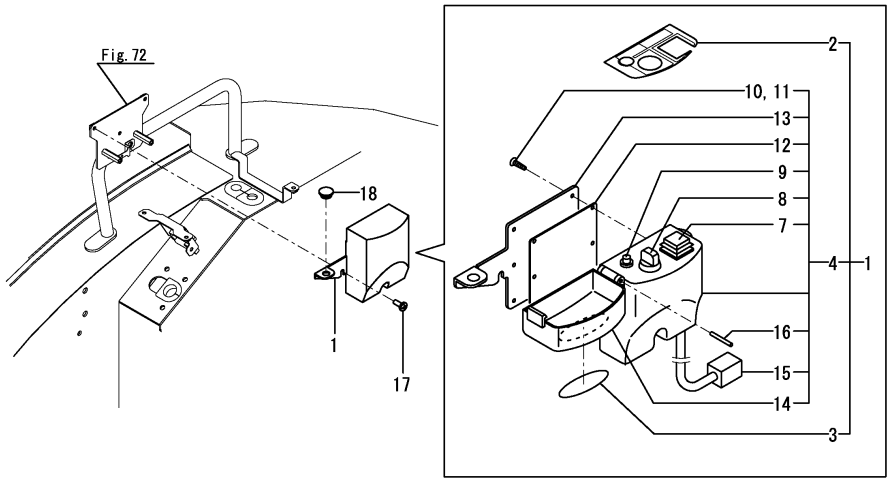

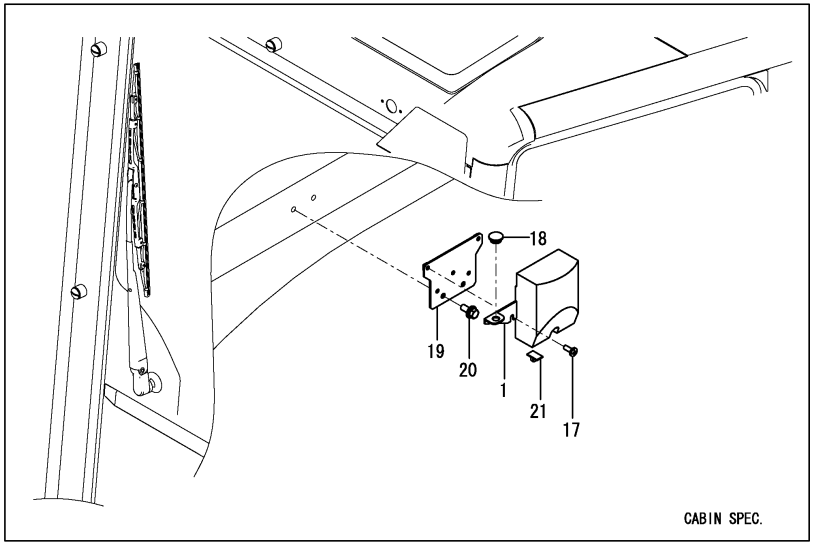

No.	Lev.	Parts No.	Description	Q'ty (A)	(B)	(C)	(D)	(E)	(F)	I	R
1	1	172958-17110	BOX, SWITCH	1	1						1
1-1	1	172958-17410	BOX,SWITCH EX D	1	1					S	2
	(A=MAF001)	(B=MAF001)									
2	2	172472-03290	LABEL, SWITCH	1	1						
3	2	172472-03300	LABEL, COVER	1	1						
4	2	172958-17101	BOX, SWITCH	1	1						1
4-1	2	172958-17400	BOX,SWITCH D	1	1					S	2
	(A=MAF001)	(B=MAF001)									
7	3	172958-17140	SWITCH ASSY	1	1						
8	3	172958-17150	SWITCH ASSY	1	1						
9	3	172958-17160	LAMP, INDICATOR	1	1						
10	3	172958-17170	SCREW, TAPPING	6	6						
11	3	172958-17180	SCREW, TAPPING	2	2						
12	3	172958-17190	PACKING	1	1						
13	3	172958-17200	BRACKET	1	1						
14	3	172958-17210	CASE	1	1						1
14-1	3	172958-17230	CASE,UPPER	1	1					S	2
	(A=MAF001)	(B=MAF001)									
15	3	172958-17220	CORD	1	1						
16	3	22351-030028	PIN, SPRING 3.0X28	1	1						
17	1	172137-46210	SCREW	3	3						
18	1	172187-64900	PLUG	1	1						
19	1	172B03-17900	STAY ASSY		1						
20	1	26014-080202	BOLT, M8X 20		2						
21	1	933169-15231	STEP		1						

Remarks
(1)Color = DARK OLIVE GRAY.
(2)Color = PANTONE 425C.

N:Old $\frac{\text{Yes}}{\text{No}}$ New, Q:Old $\frac{\text{No}}{\text{Yes}}$ New, R:Old $\frac{\text{Yes}}{\text{Yes}}$ New, S:Old $\frac{\text{No}}{\text{No}}$ New, W:Add, Z:Discontinued, F:Interchangeable by set, K:Q'ty Change

Copyright (C) YANMAR CO., LTD. All RightsReserved.

Fig.25. CANOPY LAMP

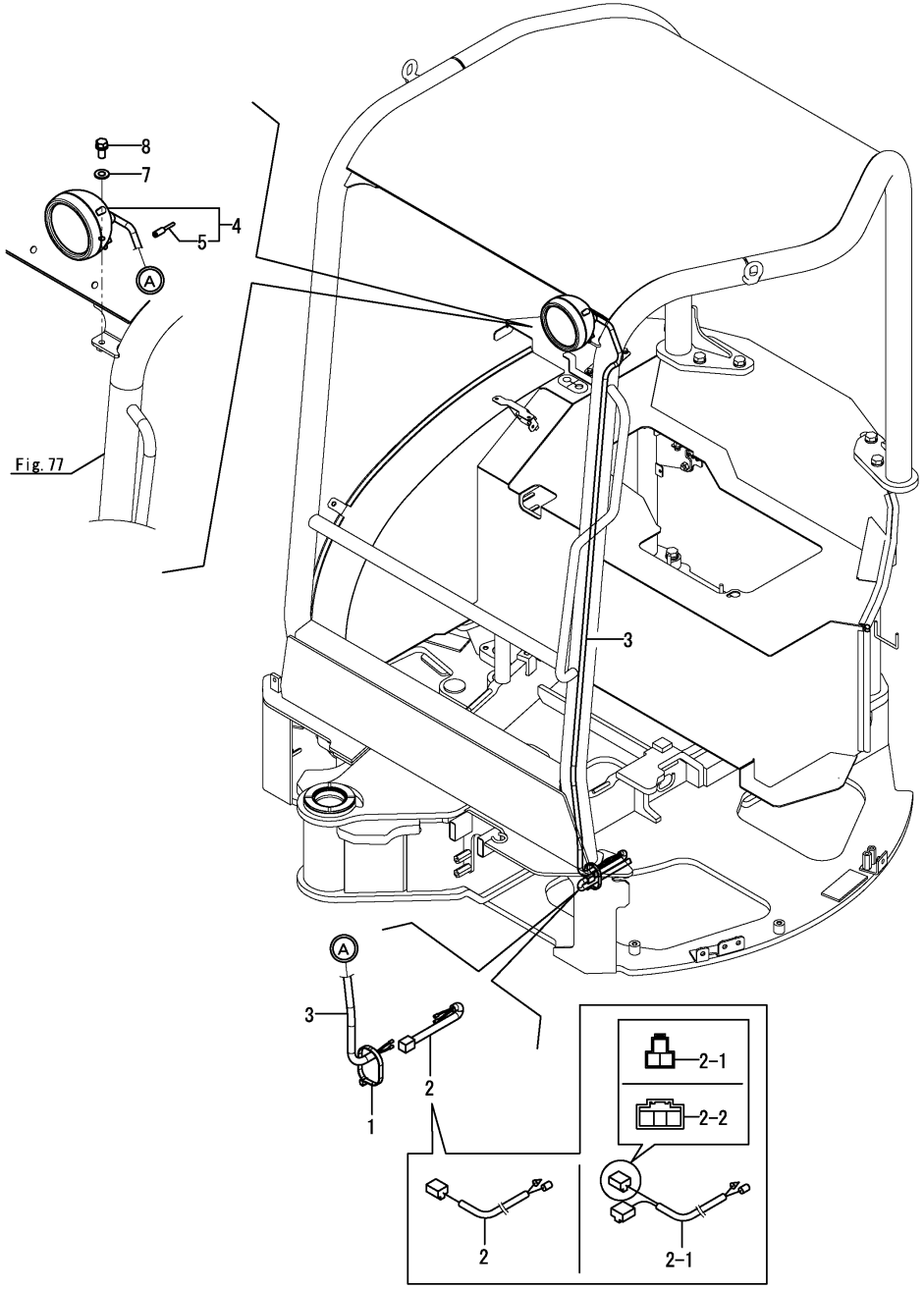

(A)=VIO35-6A P(US) (D)=
(B)=VIO35-6A C(US) (E)=
(C)= (F)=

No.	Lev.	Parts No.	Description	Q'ty (A)	(B)	(C)	(D)	(E)	(F)	I	R
1	1	172126-11510	BAND	2							
1-1	1	172126-11510	BAND	1						K	
	(A=M60501)										
2	1	172B03-16640	HARNESS,LAMP A	1							
2-1	1	172B03-16641	HARNESS,LAMP A	1						S	
	(A=M60778)										
2-2	1	172B04-16660	HARNESS,LAMP A	1						S	
	(A=M61136)										
3	1	172B03-16650	HARNESS,LAMP B	1							
4	1	1A7611-86351	LAMP, WORK 55W	1							
5	2	1A7611-86270	BULB, 12V-55W	1							
7	1	22137-100000	WASHER, 10	1							
8	1	26013-100202	BOLT, SPRING M10X 20	1							

N:Old $\frac{\text{Yes}}{\text{No}}$ New, Q:Old $\frac{\text{No}}{\text{Yes}}$ New, R:Old $\frac{\text{Yes}}{\text{Yes}}$ New, S:Old $\frac{\text{No}}{\text{No}}$ New, W:Add, Z:Discontinued, F:Interchangeable by set, K:Q'ty Change

Copyright (C) YANMAR CO., LTD. All RightsReserved.

Fig.26. WORK LAMP

(A)=VIO35-6A P(US) (D)=
(B)=VIO35-6A C(US) (E)=
(C)= (F)=

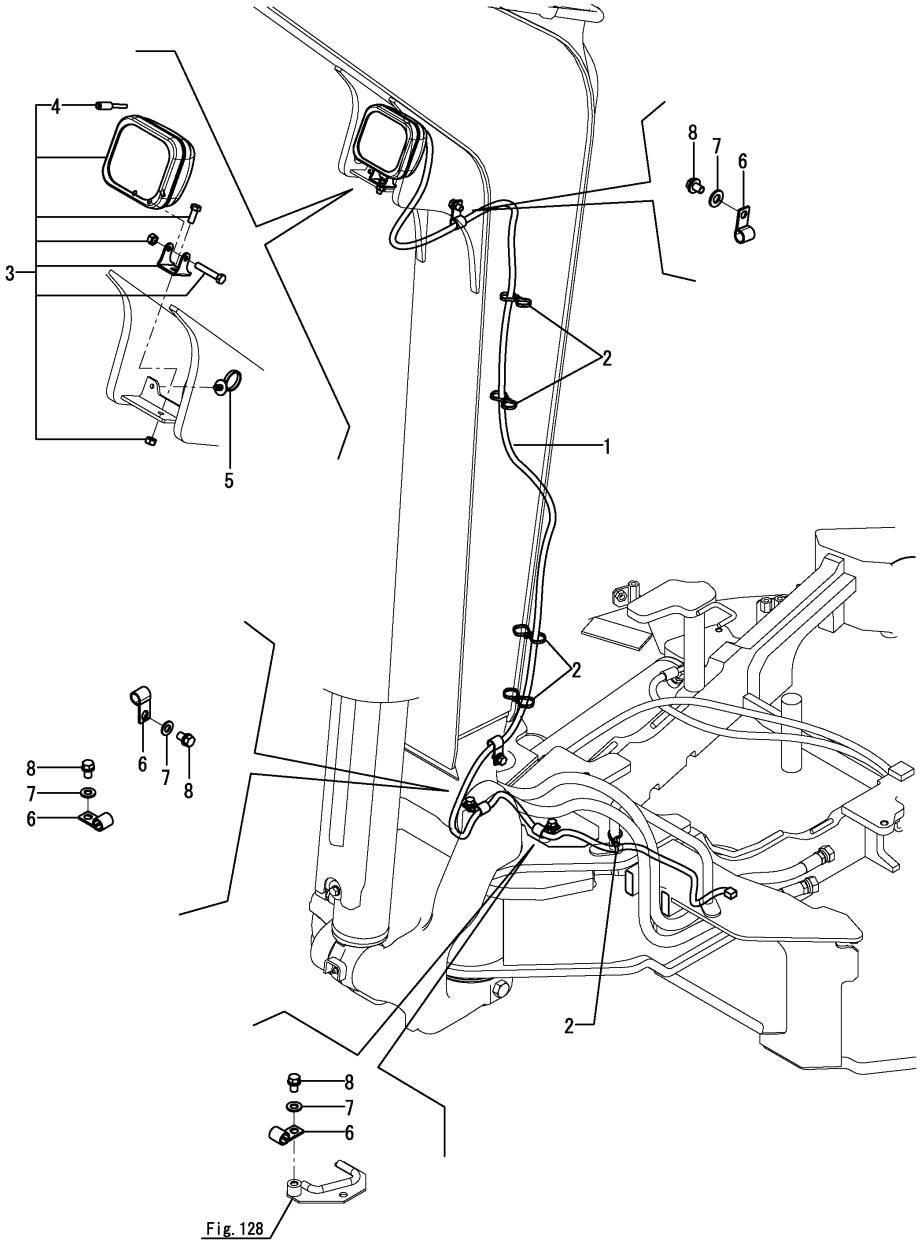

No.	Lev.	Parts No.	Description	Q'ty (A)	(B)	(C)	(D)	(E)	(F)	I	R
1	1	172B03-16550	HARNESS,WORK LAMP	1	1						
2	1	172137-16560	BAND	5	5						
3	1	172B03-17460	LAMP ASSY,WORK	1	1						
4	2	172B03-17470	BULB, 12V 55W	1	1						
5	1	1E8915-84120	CLAMP, BAND	1	1						
6	1	172B03-16130	CLAMP	4	4						
7	1	22137-100000	WASHER, 10	4	4						
8	1	26013-100162	BOLT, M10X 16	4	4						

N:Old $\frac{\text{Yes}}{\text{No}}$ New, Q:Old $\frac{\text{No}}{\text{Yes}}$ New, R:Old $\frac{\text{Yes}}{\text{Yes}}$ New, S:Old $\frac{\text{No}}{\text{No}}$ New, W:Add, Z:Discontinued, F:Interchangeable by set, K:Q'ty Change

Copyright (C) YANMAR CO., LTD. All RightsReserved.

Fig.27. INSTRUMENT PANEL

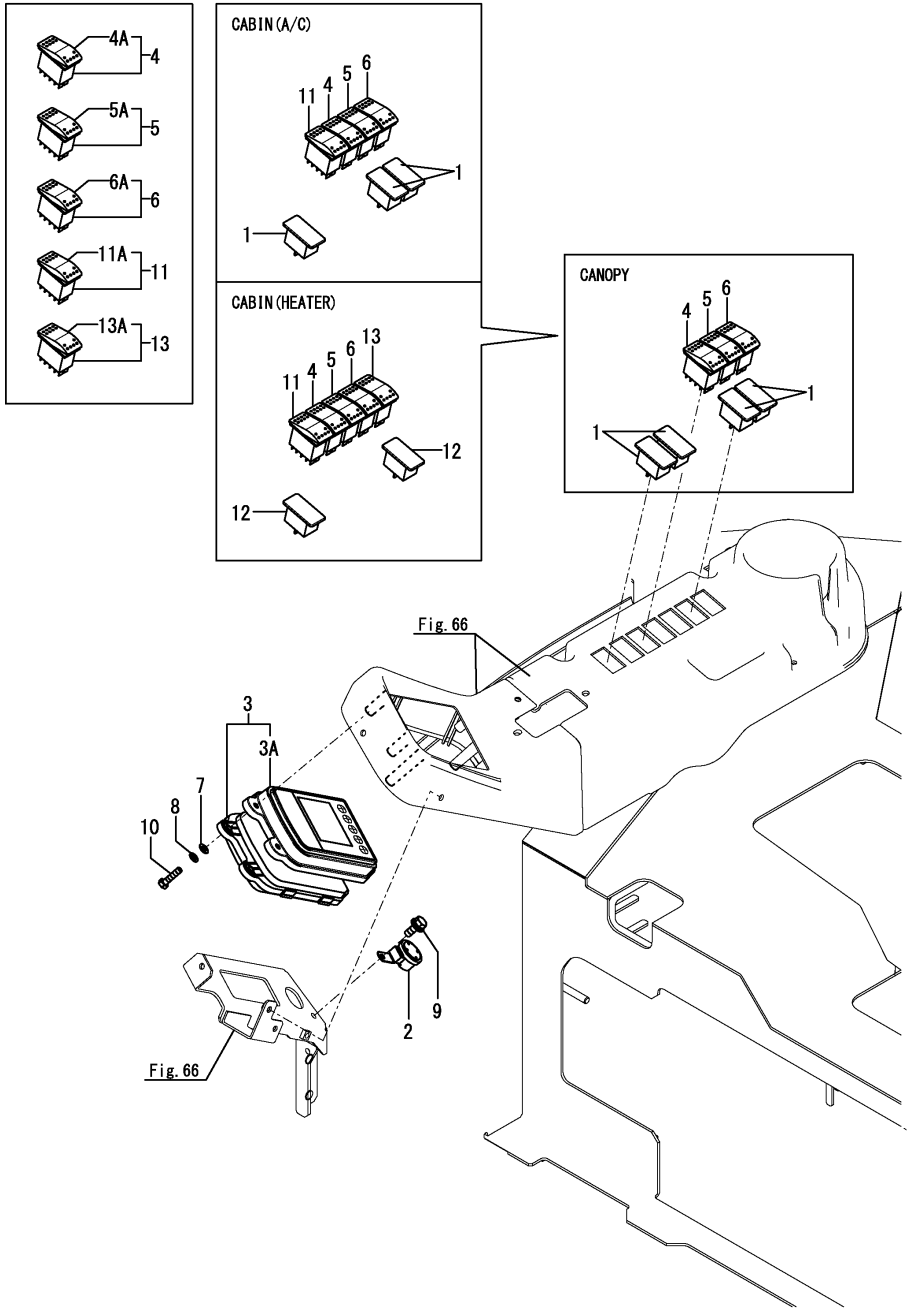

(A)=VIO35-6A P(US)
(B)=VIO35-6A C(US)
(C)=
(D)=
(E)=
(F)=

No.	Lev.	Parts No.	Description	Q'ty (A)	(B)	(C)	(D)	(E)	(F)	I	R
1	1	172538-17100	PLUG, PANEL	4	3						
2	1	172141-17150	BUZZER	1	1						
3	1	172B03-17250	MONITOR ASSY	1	1						
3-1	1	172B03-17251	MONITOR ASSY	1	1					N	
	(A=*2013.01.)		(B=*2013.01.)								
3-2	1	172B03-17252	MONITOR ASSY	1	1					N	
	(A=*2013.04.)		(B=*2013.04.)								
3-3	1	172B03-17253	MONITOR ASSY	1	1					N	
	(A=M60731)		(B=M60731)								
3A	2	172B03-17260	MONITOR ASSY,UPPER	1	1					W	
	(A=*2012.11.)		(B=*2012.11.)								
3A-1	2	172B03-17261	MONITOR ASSY,UPPER	1	1					S	
	(A=M60731)		(B=M60731)								
4	1	172B03-17301	SWITCH,LIGHT	1	1						
4A	2	172B03-17350	COVER,SWITCH LIGHT	1	1						
5	1	172B03-17310	SWITCH, ECO	1	1						
5A	2	172B03-17360	COVER,SWITCH ECO	1	1						
6	1	172B03-17320	SWITCH, AUTO DECEL	1	1						
6A	2	172B03-17370	COVER,SWITCH A/D	1	1						
7	1	22137-050000	WASHER, 5	4	4						
8	1	22217-050000	WASHER, SPRING 5	4	4						
9	1	26014-060162	BOLT, M6X 16	1	1						
10	1	26116-050202	BOLT, M5X 20 PLATED	4	4						
11	1	172B03-17331	SWITCH,WIPER		1						
11A	2	172B03-17380	COVER,SWITCH WIPER		1						
12	1	172538-17100	PLUG, PANEL		2						
13	1	172B03-17341	SWITCH,HEATER		1						
13A	2	172B03-17390	COVER,SWITCH HEATER		1						

N:Old $\frac{\text{Yes}}{\text{No}}$ New, Q:Old $\frac{\text{No}}{\text{Yes}}$ New, R:Old $\frac{\text{Yes}}{\text{Yes}}$ New, S:Old $\frac{\text{No}}{\text{No}}$ New, W:Add, Z:Discontinued, F:Interchangeable by set, K:Q'ty Change

Copyright (C) YANMAR CO., LTD. All RightsReserved.

Fig.28. ELECTRIC PARTS(ESS)

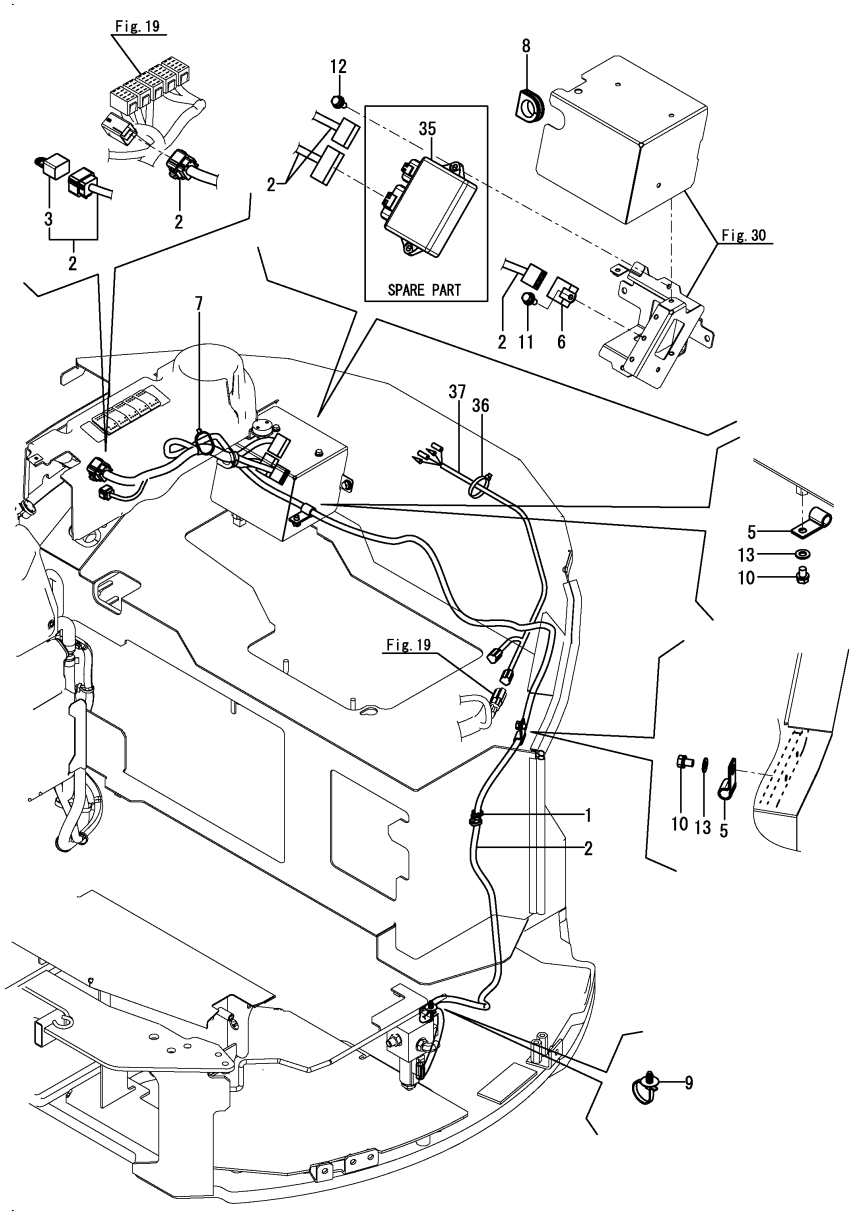

(A)=VIO35-6A P(US)
(B)=VIO35-6A C(US)
(C)=
(D)=
(E)=
(F)=

No.	Lev.	Parts No.	Description	Q'ty (A)	(B)	(C)	(D)	(E)	(F)	I	R
1	1	172137-16560	BAND		1						2
2	1	172B03-16600	HARNESS ASSY,ESS		1						2
2-1	1	172B03-16601	HARNESS ASSY,ESS		1					N	2
		(B=M60571)									
2-2	1	172B03-16602	HARNESS ASSY,ESS		1					N	2
		(B=M61172)									
3	2	172648-16600	DIODE, 1.5-2P		1						2
5	1	184016-44300	CLAMP, WRC12		2						2
6	1	198461-52950	RELAY, CA TYPE C		1						2
7	1	194202-56460	BAND, 200		1						2
8	1	172165-62800	GROMMET		1						2
9	1	1E8915-84120	CLAMP, BAND		1						2
10	1	26013-080122	BOLT, M8X 12		2						2
11	1	26014-060162	BOLT, M6X 16		1						2
12	1	26014-060202	BOLT, M6X 20		2						2
13	1	22137-080000	WASHER, 8		2						2
35	1	1A8280-50900	CONTROL-UNIT,SERVICE		1						1
36	1	1E8915-84120	CLAMP, BAND		1						
37	1	172B03-16660	HARNESS,CAB-BUZZER		1						

Remarks
(1)Spare parts.
To install proper information, go to an authorized distributor.
(2)Not applied for angle blade specification.

N:Old $\frac{\text{Yes}}{\text{No}}$ New, Q:Old $\frac{\text{No}}{\text{Yes}}$ New, R:Old $\frac{\text{Yes}}{\text{Yes}}$ New, S:Old $\frac{\text{No}}{\text{No}}$ New, W:Add, Z:Discontinued, F:Interchangeable by set, K:Q'ty Change

Copyright (C) YANMAR CO., LTD. All RightsReserved.

Fig.29. HEATER

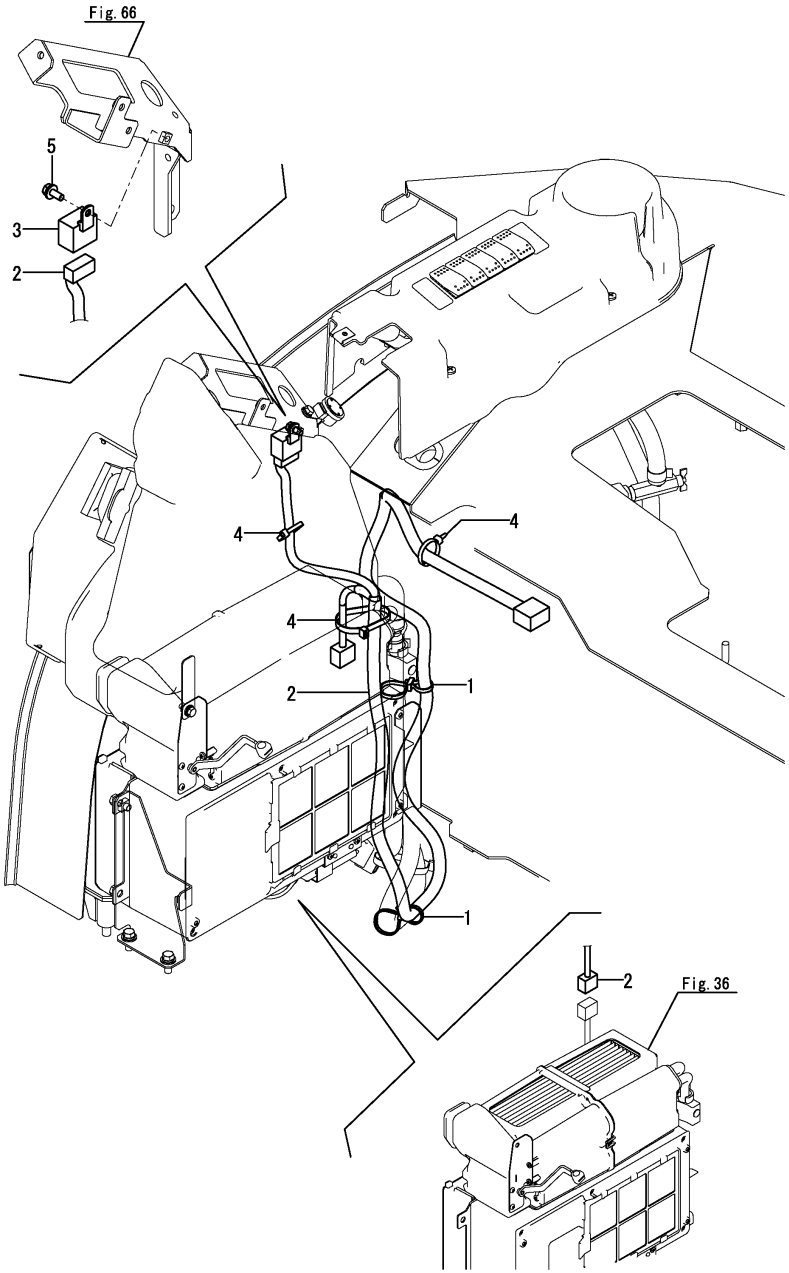

(A)=VIO35-6A P(US)
(B)=VIO35-6A C(US)
(C)=
(D)=
(E)=
(F)=

No.	Lev.	Parts No.	Description	Q'ty (A)	(B)	(C)	(D)	(E)	(F)	I	R
1	1	172137-16560	BAND		2						
2	1	172B03-16870	HARNESS,HEATER		1						
3	1	198461-52950	RELAY, CA TYPE C		1						
4	1	194202-56460	BAND, 200		3						
5	1	26014-060162	BOLT, M6X 16		1						

N:Old $\xleftarrow[\text{No}]{\text{Yes}}$ New, Q:Old $\xleftarrow[\text{Yes}]{\text{No}}$ New, R:Old $\xleftarrow[\text{Yes}]{\text{Yes}}$ New, S:Old $\xleftarrow[\text{No}]{\text{No}}$ New, W:Add, Z:Discontinued, F:Interchangeable by set, K:Q'ty Change

Copyright (C) YANMAR CO., LTD. All RightsReserved.

Fig.30. BRACKET CONTROL

(A)=VIO35-6A P(US)
(B)=VIO35-6A C(US)
(C)=
(D)=
(E)=
(F)=

No.	Lev.	Parts No.	Description	Q'ty (A)	(B)	(C)	(D)	(E)	(F)	I	R
1	1	172B03-17700	BRACKET ASSY, CONT		1						
2	1	172B03-17770	COVER ASSY, CONTROL		1						
3	1	172187-68060	RUBBER, STOPPER		1						
4	1	26014-060162	BOLT, M6X 16		3						
5	1	26014-080162	BOLT, M8X 16		2						

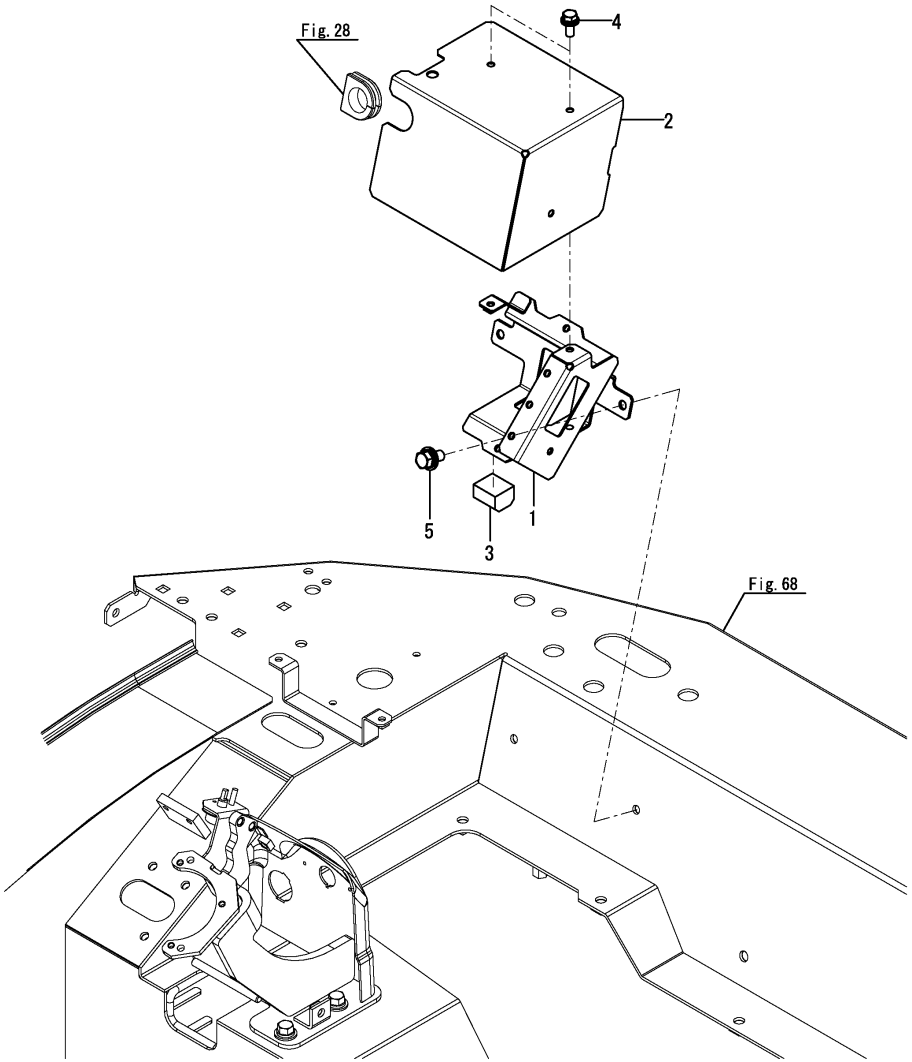

N:Old ◄Yes/No► New, Q:Old ◄No/Yes► New, R:Old ◄Yes/Yes► New, S:Old ◄No/No► New, W:Add, Z:Discontinued, F:Interchangeable by set, K:Q'ty Change

Copyright (C) YANMAR CO., LTD. All RightsReserved.

Fig.156. (30A)ELECTRIC PARTS(P.T.O.)(ANGLE BLADE SPEC.)

(A)=VIO35-6A P(US)
(B)=VIO35-6A C(US)
(C)=
(D)=
(E)=
(F)=

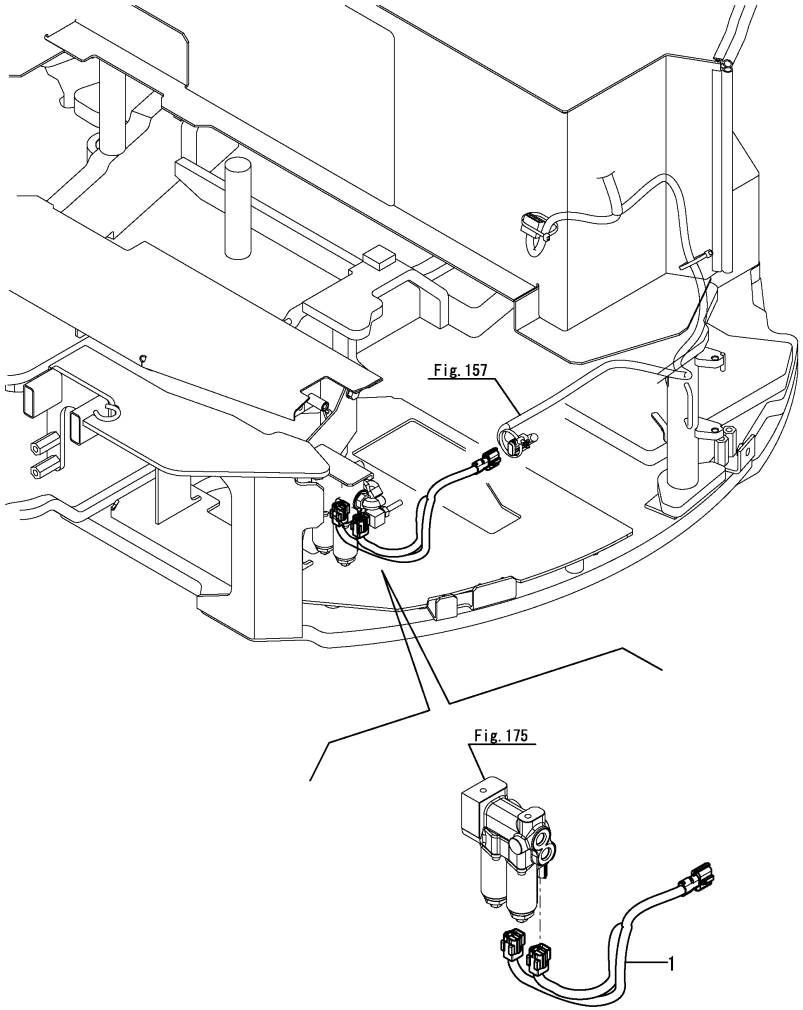

No.	Lev.	Parts No.	Description	Q'ty (A)	(B)	(C)	(D)	(E)	(F)	I	R
1	1	172B05-16610	HARNESS,PTO	1	1						

Remarks
* Exclusive figure for angle blade specification.

N:Old ◄Yes/No► New, Q:Old ◄No/Yes► New, R:Old ◄Yes/Yes► New, S:Old ◄No/No► New, W:Add, Z:Discontinued, F:Interchangeable by set, K:Q'ty Change

Copyright (C) YANMAR CO., LTD. All RightsReserved.

Fig.157. (30B)ELECTRIC PARTS(ANGLE BLADE LEVER)(ANGLE BLADE SPEC.)

(A)=VIO35-6A P(US)
(B)=VIO35-6A C(US)
(C)=
(D)=
(E)=
(F)=

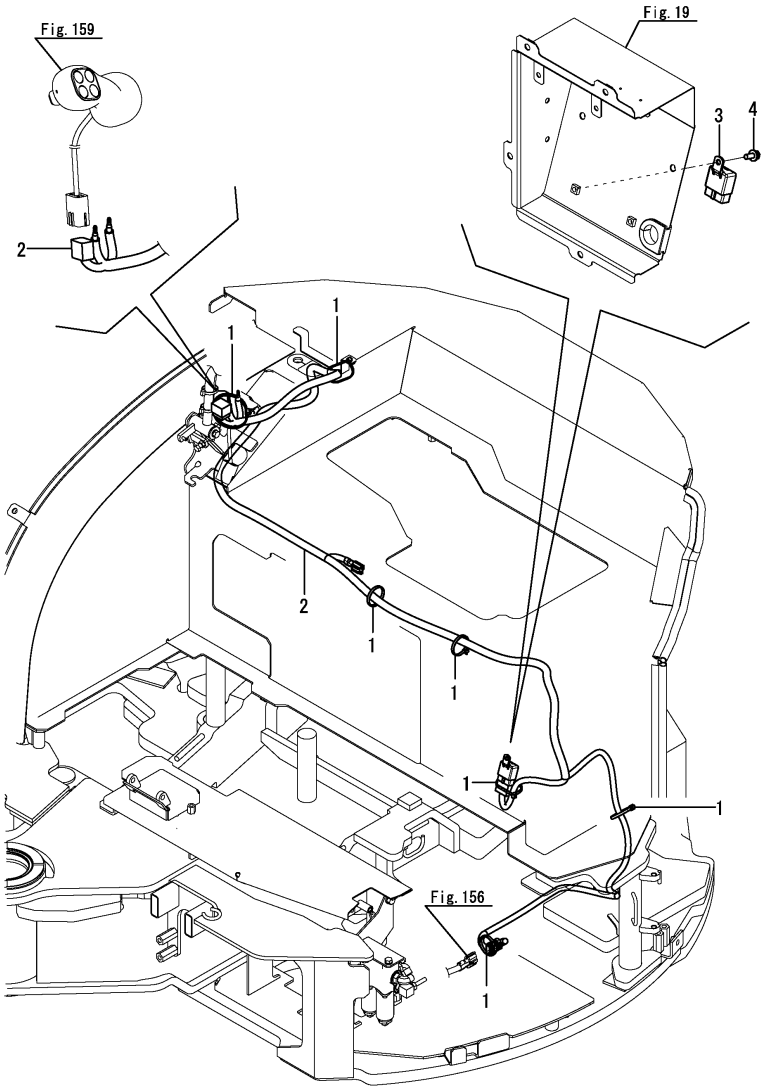

No.	Lev.	Parts No.	Description	Q'ty (A)	(B)	(C)	(D)	(E)	(F)	I	R
1	1	172126-11510	BAND	7	7						
2	1	172B03-16340	HARNESS,ANGLE	1	1						
3	1	172B02-17150	RELAY,CA C TYPE	1	1						
4	1	26014-060162	BOLT, M6X 16	1	1						

Remarks
* Exclusive figure for angle blade specification.

N:Old $\xleftrightarrow[\text{No}]{\text{Yes}}$ New, Q:Old $\xleftrightarrow[\text{Yes}]{\text{No}}$ New, R:Old $\xleftrightarrow[\text{Yes}]{\text{Yes}}$ New, S:Old $\xleftrightarrow[\text{No}]{\text{No}}$ New, W:Add, Z:Discontinued, F:Interchangeable by set, K:Q'ty Change

Copyright (C) YANMAR CO., LTD. All RightsReserved.

Fig.158. (30C)ELECTRIC PARTS(ANGLE BLADE LEVER)(ANGLE BLADE & ESS SPEC.)

(A)=VIO35-6A P(US)
(B)=VIO35-6A C(US)
(C)=
(D)=
(E)=
(F)=

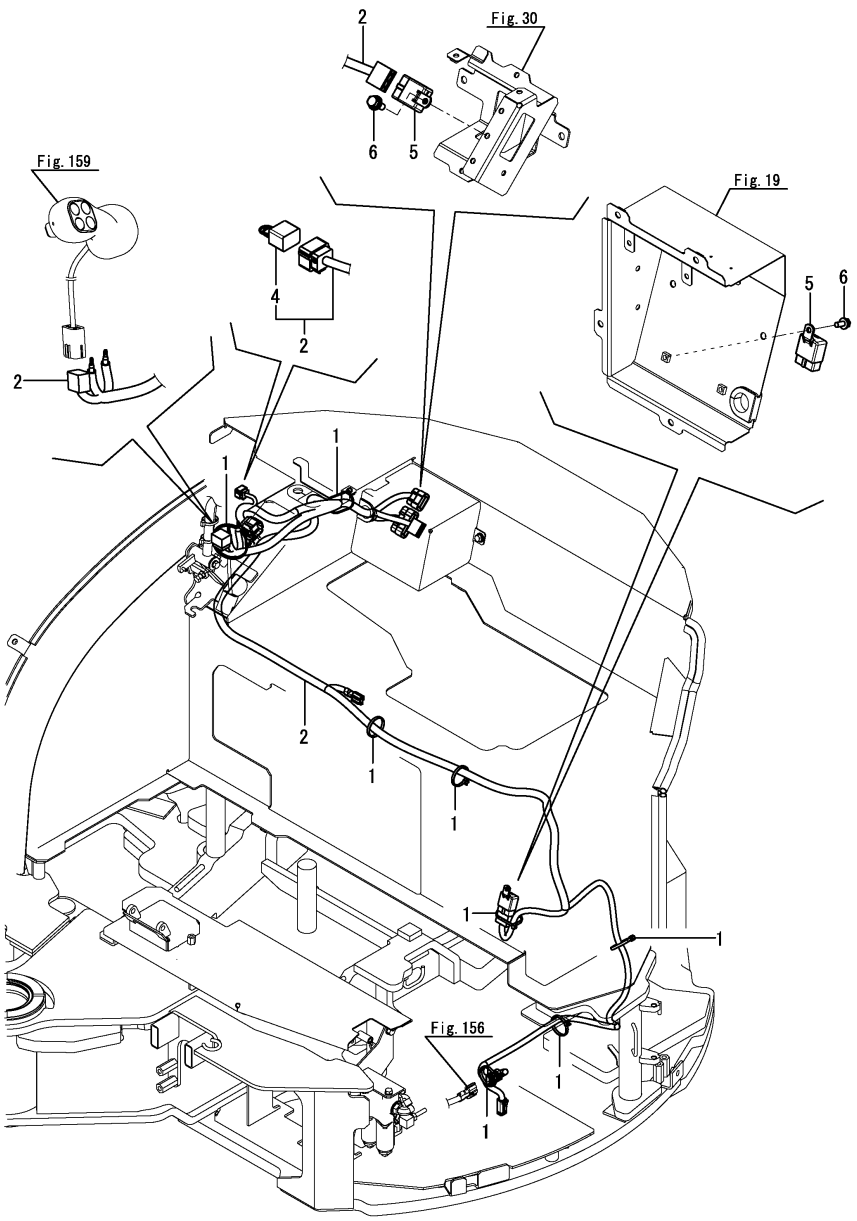

No.	Lev.	Parts No.	Description	Q'ty (A)	(B)	(C)	(D)	(E)	(F)	I	R
1	1	172126-11510	BAND		8						
2	1	172B03-16360	HARNESS ASSY,ANGLE S		1						
4	2	172649-16560	DIODE, 1.5-3PA		1						
5	1	172B02-17150	RELAY,CA C TYPE		2						
6	1	26014-060162	BOLT, M6X 16		2						

Remarks
* Exclusive figure for angle blade specification.

N:Old ◄Yes/No► New, Q:Old ◄No/Yes► New, R:Old ◄Yes/Yes► New, S:Old ◄No/No► New, W:Add, Z:Discontinued, F:Interchangeable by set, K:Q'ty Change

Copyright (C) YANMAR CO., LTD. All RightsReserved.

Fig.31. AIR CONDITIONER(ELECTRIC PARTS)

(A)=VIO35-6A P(US)
(B)=VIO35-6A C(US)
(C)=
(D)=
(E)=
(F)=

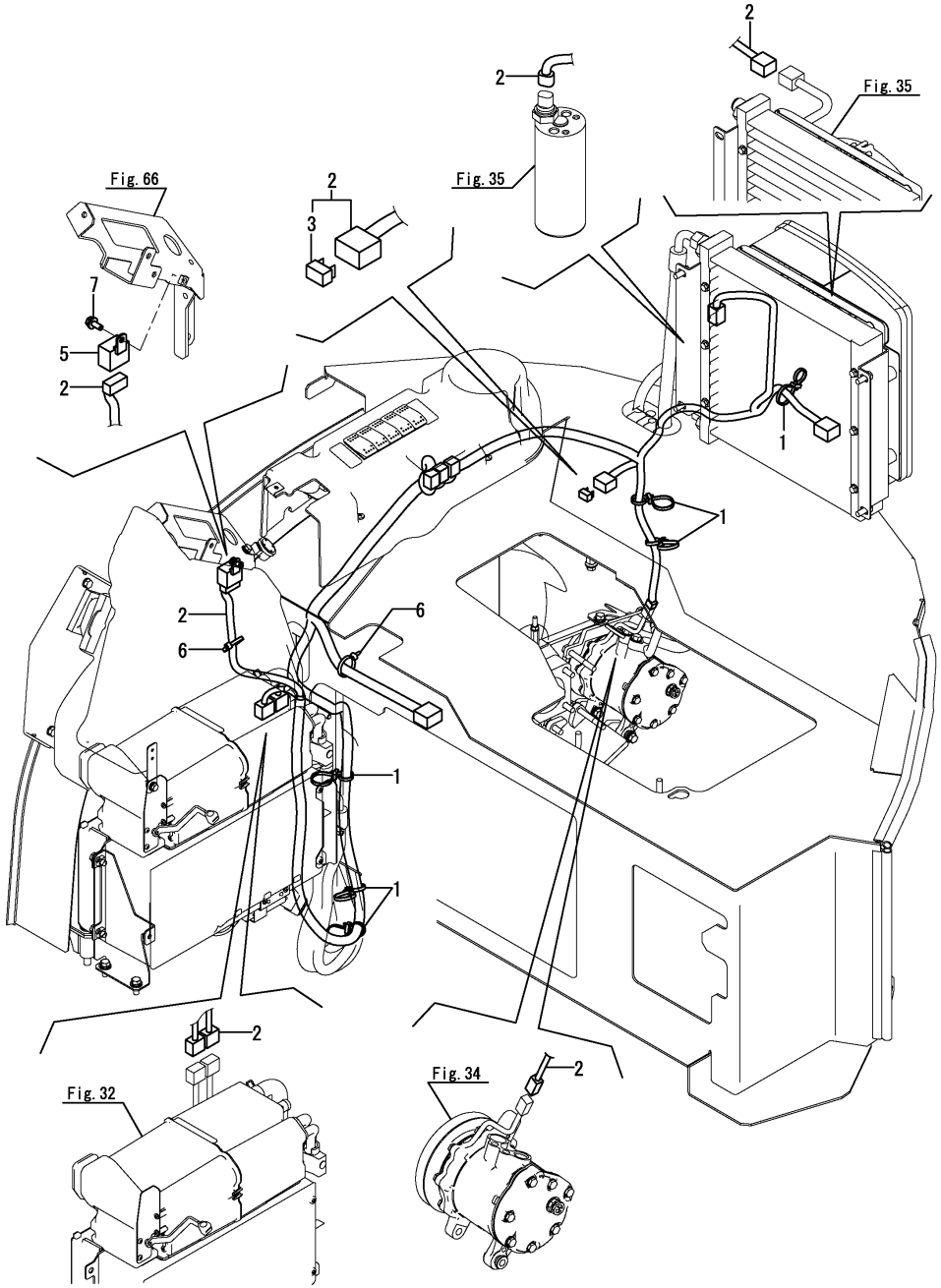

No.	Lev.	Parts No.	Description	Q'ty (A)	(B)	(C)	(D)	(E)	(F)	I	R
1	1	172137-16560	BAND		6						
2	1	172B03-16850	HARNESS ASSY,A/C		1						
3	2	172648-16600	DIODE, 1.5-2P		1						
5	1	198461-52950	RELAY, CA TYPE C		1						
6	1	194202-56460	BAND, 200		3						
7	1	26014-060162	BOLT, M6X 16		1						

N:Old $\xleftrightarrow[\text{No}]{\text{Yes}}$ New, Q:Old $\xleftrightarrow[\text{Yes}]{\text{No}}$ New, R:Old $\xleftrightarrow[\text{Yes}]{\text{Yes}}$ New, S:Old $\xleftrightarrow[\text{No}]{\text{No}}$ New, W:Add, Z:Discontinued, F:Interchangeable by set, K:Q'ty Change

Copyright (C) YANMAR CO., LTD. All RightsReserved.

Fig.32. AIR CONDITIONER(UNIT)

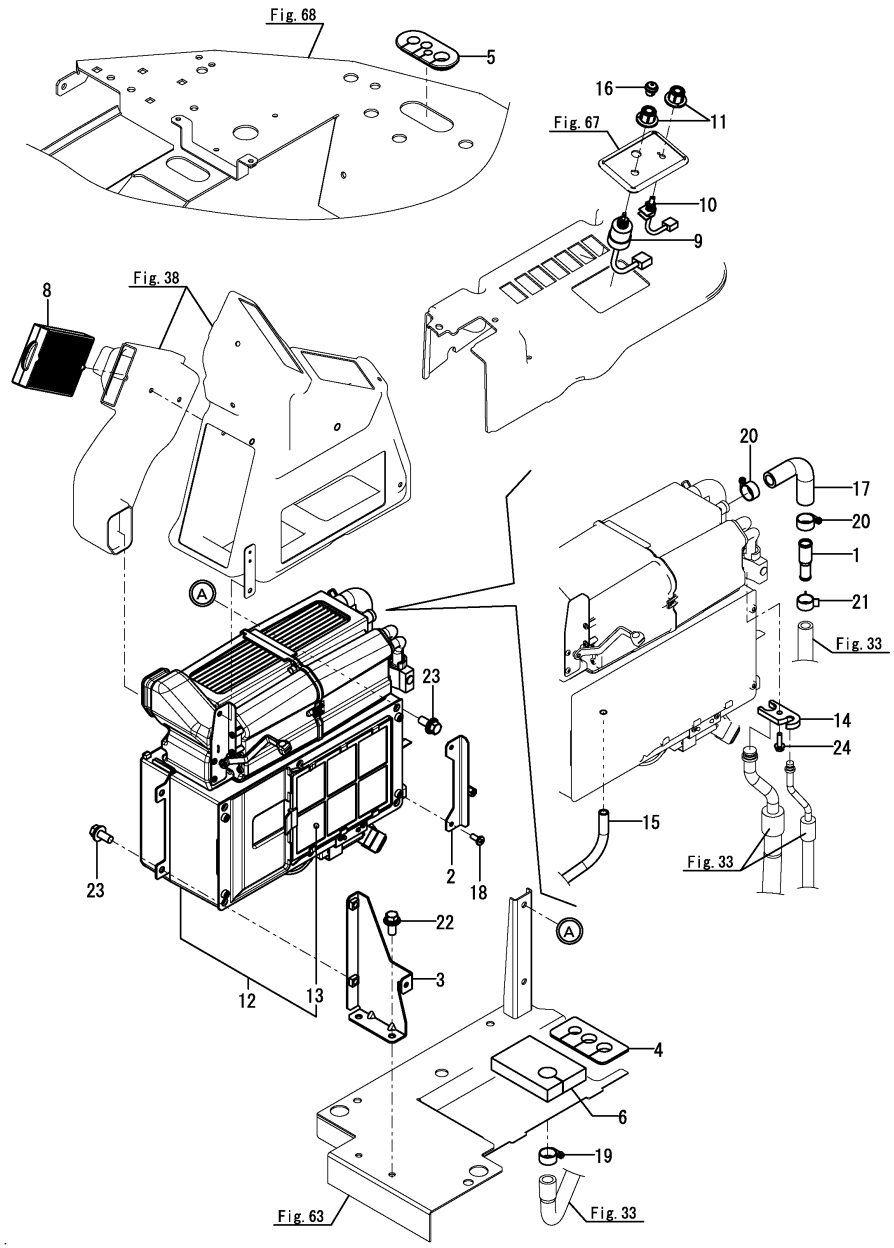

(A)=VIO35-6A P(US)
(B)=VIO35-6A C(US)
(C)=
(D)=
(E)=
(F)=

No.	Lev.	Parts No.	Description	Q'ty (A)	(B)	(C)	(D)	(E)	(F)	I	R
1	1	172455-17930	JOINT, HOSE		1						
2	1	172B03-18310	STAY ASSY		1						
3	1	172B03-18350	BRACKET ASSY, AC F		1						
4	1	172B03-18550	GROMMET		1						
5	1	172B03-18570	GROMMET		1						
6	1	172B03-18580	SPONGE		1						
8	1	172B06-18420	FILTER, AIR		1						
9	1	172B06-18560	SWITCH, BLOWER		1						
10	1	172B06-18570	SWITCH, THERMO		1						
11	1	172B06-18580	KNOB		2						
12	1	172B03-19100	CONDITIONER, AIR		1						1
13	2	172B03-19120	FILTER, REC		1						
14	1	172B03-19110	PLATE, FLANGE		1						
15	1	172B03-19840	HOSE, DRAIN AC		1						
16	1	172B03-19160	SWITCH ASSY		1						
17	1	172B03-19920	HOSE, HEATER ELBOW		1						
18	1	22877-500120	SCREW, 5X12		2						
19	1	23001-022000	CLAMP, HOSE 22		1						
20	1	23001-022000	CLAMP, HOSE 22		2						
21	1	23080-018000	CLAMP, 18		1						
22	1	26014-080202	BOLT, M8X 20		2						
23	1	26014-080202	BOLT, M8X 20		4						
24	1	26106-060202	BOLT, M6X 20 PLATED		1						

Remarks
(1)Inner parts are shown in Fig.149(32A).

N:Old $\frac{\text{Yes}}{\text{No}}$ New, Q:Old $\frac{\text{No}}{\text{Yes}}$ New, R:Old $\frac{\text{Yes}}{\text{Yes}}$ New, S:Old $\frac{\text{No}}{\text{No}}$ New, W:Add, Z:Discontinued, F:Interchangeable by set, K:Q'ty Change

Copyright (C) YANMAR CO., LTD. All RightsReserved.

Fig.149. (32A)AIR CONDITIONER(UNIT INNER PARTS)

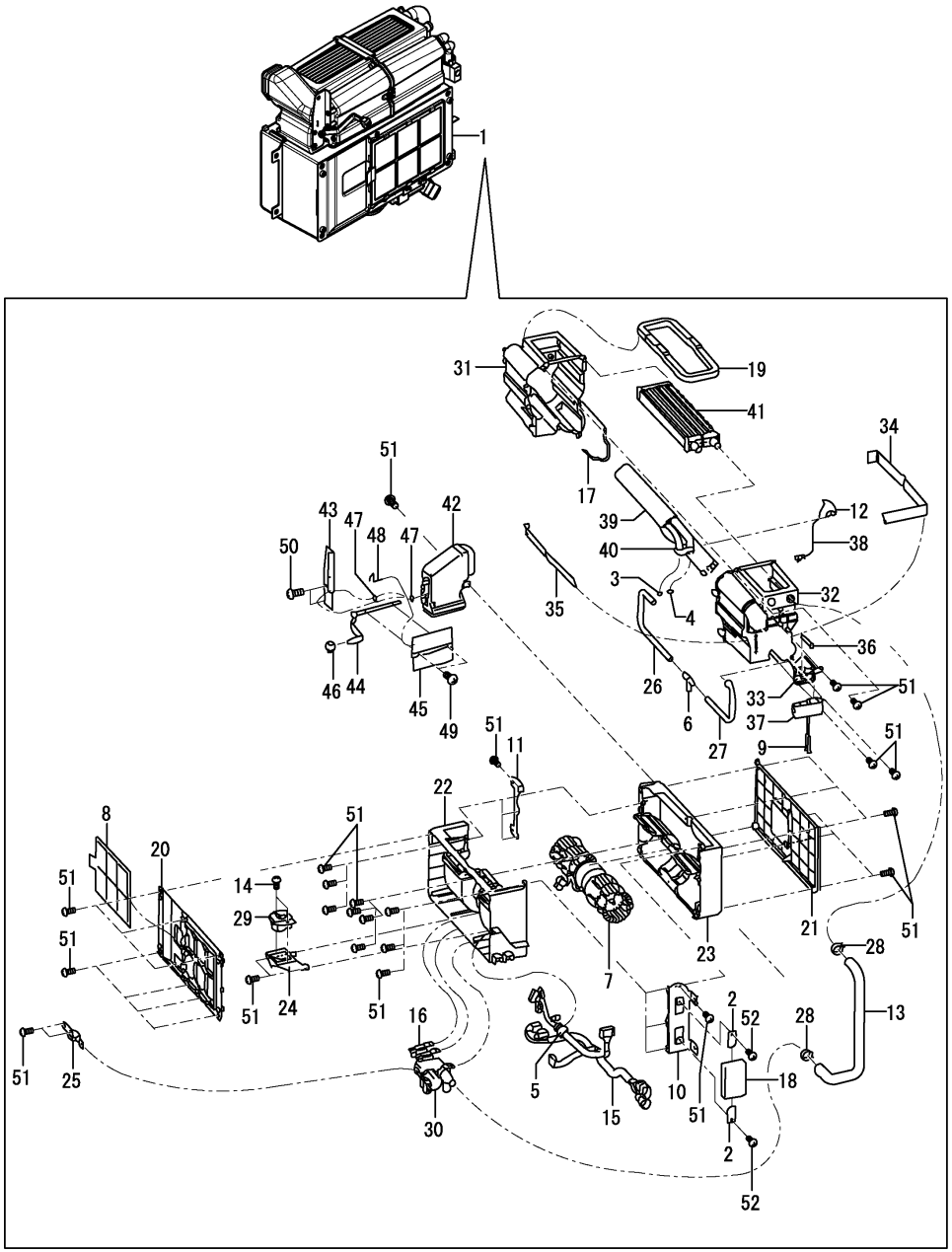

(A)=VIO35-6A P(US)
(B)=VIO35-6A C(US)
(C)=
(D)=
(E)=
(F)=

No.	Lev.	Parts No.	Description	Q'ty (A)	(B)	(C)	(D)	(E)	(F)	I	R
1	1	172B03-19100	CONDITIONER, AIR		1						
2	2	172B06-18550	BRACKET,AMP		2						
3	2	172B06-18680	O-RING		1						
4	2	172B06-18690	O-RING		1						
5	2	172B06-18930	INSULATOR,HARNESS		1						
6	2	172B06-18960	ELBOW,DRAIN		1						
7	2	172B06-18970	MOTOR ASSY,BLOWER		1						
8	2	172B03-19120	FILTER, REC		1						
9	2	172B06-19120	BOLT, SOCKET M5X40		2						
10	2	172B03-19130	BRACKET, 1		1						
11	2	172B03-19140	BRACKET, 2		1						
12	2	172B06-19140	HOLDER,THERMISTOR		1						
13	2	172B03-19150	HOSE, HEATER		1						
14	2	172B06-19150	SCREW, PAN HEAD		2						
15	2	172B03-19190	HARNESS ASSY, HVAC		1						
16	2	172B03-19200	RELAY		2						
17	2	172B06-19200	SEAL,CASE		1						
18	2	172B03-19210	CONTROLLER, HVAC		1						
19	2	172B03-19220	SEAL, OUTLET		1						
20	2	172B03-19230	COVER, FRONT		1						
21	2	172B03-19240	COVER, BACK		1						
22	2	172B03-19250	CASE ASSY, LOW FRONT		1						
23	2	172B03-19260	CASE ASSY, LOW BACK		1						
24	2	172B03-19270	MOUNT, RESISTOR		1						
25	2	172B03-19280	RETAINER, VALVE		1						
26	2	172B03-19290	HOSE, DRAIN 1		1						
27	2	172B03-19300	HOSE, DRAIN 2		1						
28	2	172B03-19310	CLAMP, HOSE		2						
29	2	172B03-19320	RESISTOR		1						
30	2	172B03-19330	VALVE ASSY, WATER		1						
31	2	172B03-19340	CASE ASSY, UP FEMALE		1						
32	2	172B03-19350	CASE ASSY, UP MALE		1						
33	2	172B03-19360	COVER ASSY, PAF		1						
34	2	172B03-19370	SEAL, AC-UNIT 1		1						
35	2	172B03-19380	SEAL, AC-UNIT 2		1						
36	2	172B03-19390	RETAINER, TXV		1						
37	2	172B03-19400	VALVE, EXPANSION		1						
38	2	172B03-19410	SENSOR, TEMPERATURE		1						
39	2	172B03-19420	EVAPORATOR ASSY		1						
40	2	172B03-19430	STAY		1						
41	2	172B03-19440	HEATER ASSY		1						
42	2	172B03-19450	DUCT ASSY		1						
43	2	172B03-19460	BRACKET, DUCT		1						
44	2	172B03-19470	LEVER ASSY, DOOR		1						
45	2	172B03-19480	DOOR ASSY		1						
46	2	172B03-19490	KNOB		1						
47	2	172B03-19500	SPACER, C		2						
48	2	172B03-19510	SPRING		1						
49	2	172B03-19520	SCREW, 3X6		2						
50	2	172B03-19530	SCREW, 4X10		2						
51	2	172B03-19540	SCREW, 4X16		36						

N:Old $\overset{\text{Yes}}{\underset{\text{No}}{\leftrightarrow}}$ New, Q:Old $\overset{\text{No}}{\underset{\text{Yes}}{\leftrightarrow}}$ New, R:Old $\overset{\text{Yes}}{\underset{\text{Yes}}{\leftrightarrow}}$ New, S:Old $\overset{\text{No}}{\underset{\text{No}}{\leftrightarrow}}$ New, W:Add, Z:Discontinued, F:Interchangeable by set, K:Q'ty Change

++ CONTINUE ++

Copyright (C) YANMAR CO., LTD. All RightsReserved.

Fig.149. (32A)AIR CONDITIONER(UNIT INNER PARTS)

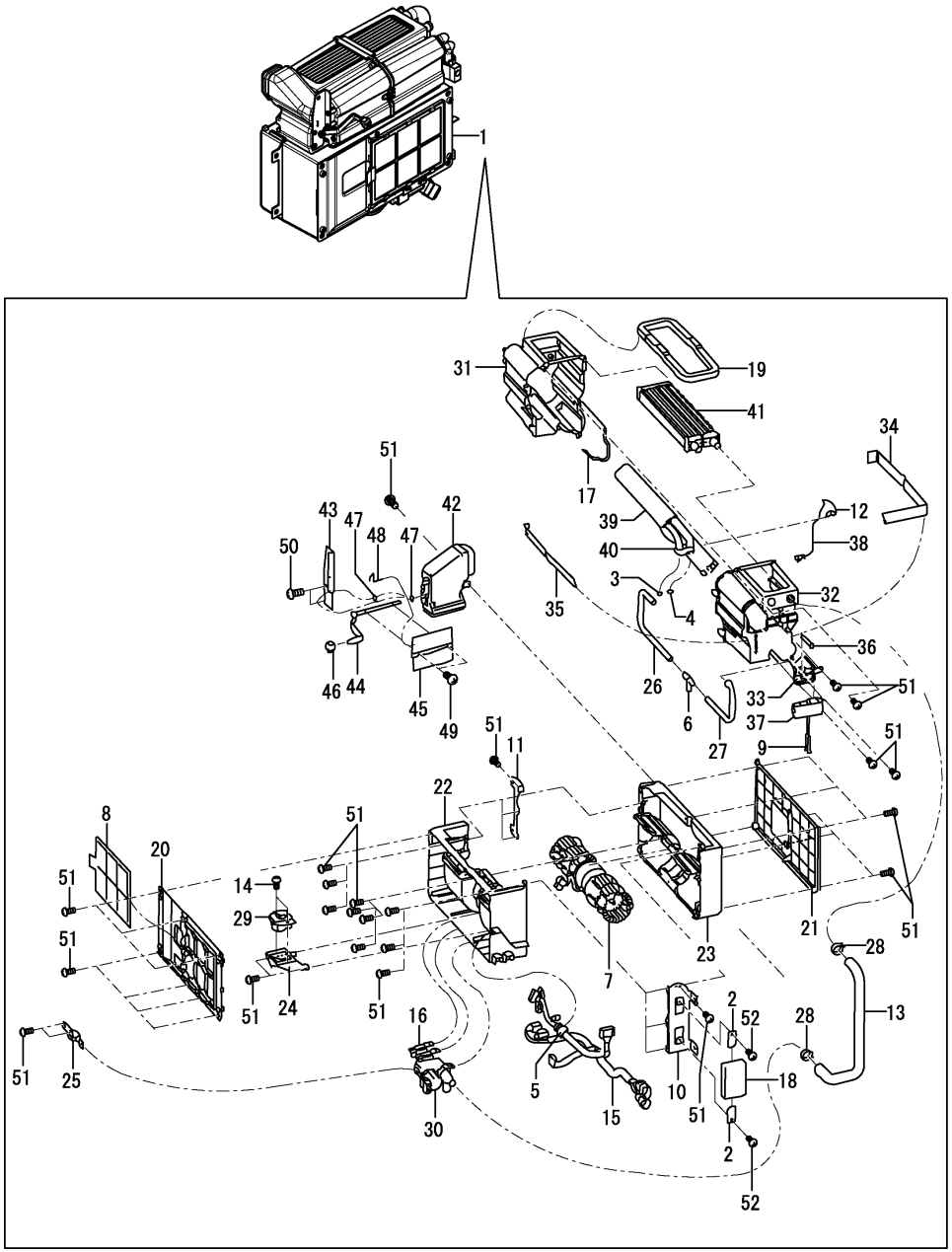

(A)=VIO35-6A P(US)
(B)=VIO35-6A C(US)
(C)=
(D)=
(E)=
(F)=

No.	Lev.	Parts No.	Description	Q'ty (A)	(B)	(C)	(D)	(E)	(F)	I	R
52	2	172B03-19550	SCREW, 5X5		2						

N:Old $\xleftarrow[\text{No}]{\text{Yes}}$ New, Q:Old $\xleftarrow[\text{Yes}]{\text{No}}$ New, R:Old $\xleftarrow[\text{Yes}]{\text{Yes}}$ New, S:Old $\xleftarrow[\text{No}]{\text{No}}$ New, W:Add, Z:Discontinued, F:Interchangeable by set, K:Q'ty Change

Copyright (C) YANMAR CO., LTD. All RightsReserved.

Fig.33. AIR CONDITIONER(PIPING)

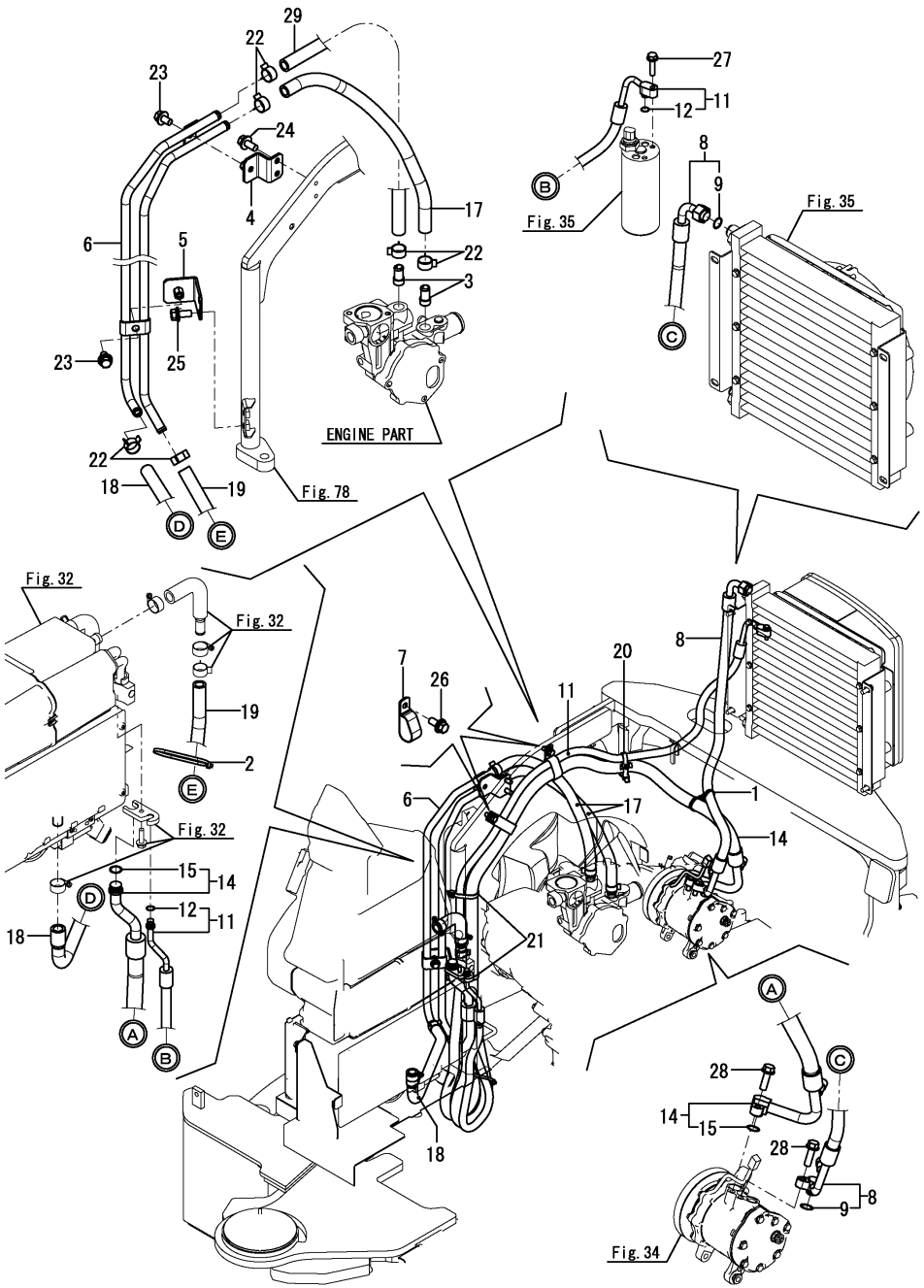

(A)=VIO35-6A P(US)
(B)=VIO35-6A C(US)
(C)=
(D)=
(E)=
(F)=

No.	Lev.	Parts No.	Description	Q'ty (A)	(B)	(C)	(D)	(E)	(F)	I	R
1	1	172137-16560	BAND		1						
2	1	172183-16560	CLIP, HOSE		1						
3	1	172124-17640	JOINT, PIPE		2						
4	1	172B03-18600	STAY ASSY, PIPE		1						
5	1	172B03-18640	STAY ASSY, PIPE		1						
6	1	172B03-19710	PIPE ASSY, HEATER		1						
7	1	172B03-19750	CLAMP, HOSE		2						
8	1	172B03-19760	HOSE ASSY, COMP-COND		1						
9	2	172B06-18680	O-RING		2						
11	1	172B03-19800	HOSE ASSY, R/D-UNIT		1						
12	2	172B06-18700	O-RING		2						
14	1	172B03-19820	HOSE ASSY, UNIT-COMP		1						
15	2	172B06-18690	O-RING		2						
17	1	172B03-19860	HOSE, HEATER 420		1						
18	1	172B03-19890	HOSE, HEATER IN		1						
19	1	172B03-19950	HOSE, HEATER 640		1						
20	1	194680-51670	BAND, CLIP		1						
21	1	194680-51670	BAND, CLIP		2						
22	1	23080-018000	CLAMP, 18		6						
23	1	26014-080162	BOLT, M8X 16		2						
24	1	26014-080202	BOLT, M8X 20		2						
25	1	26014-080202	BOLT, M8X 20		2						
26	1	26014-080202	BOLT, M8X 20		2						
27	1	26106-060252	BOLT, M6X 25 PLATED		1						
28	1	26106-080252	BOLT, M8X 25 PLATED		2						
29	1	172B03-19860	HOSE, HEATER 420		1						
29-1	1	172B03-19870	HOSE, HEATER 380		1					N	

(B=M60540)

N:Old $\xleftarrow[\text{No}]{\text{Yes}}$ New, Q:Old $\xleftarrow[\text{Yes}]{\text{No}}$ New, R:Old $\xleftarrow[\text{Yes}]{\text{Yes}}$ New, S:Old $\xleftarrow[\text{No}]{\text{No}}$ New, W:Add, Z:Discontinued, F:Interchangeable by set, K:Q'ty Change

Copyright (C) YANMAR CO., LTD. All RightsReserved.

Fig.34. AIR CONDITIONER(ENGINE RELATED)

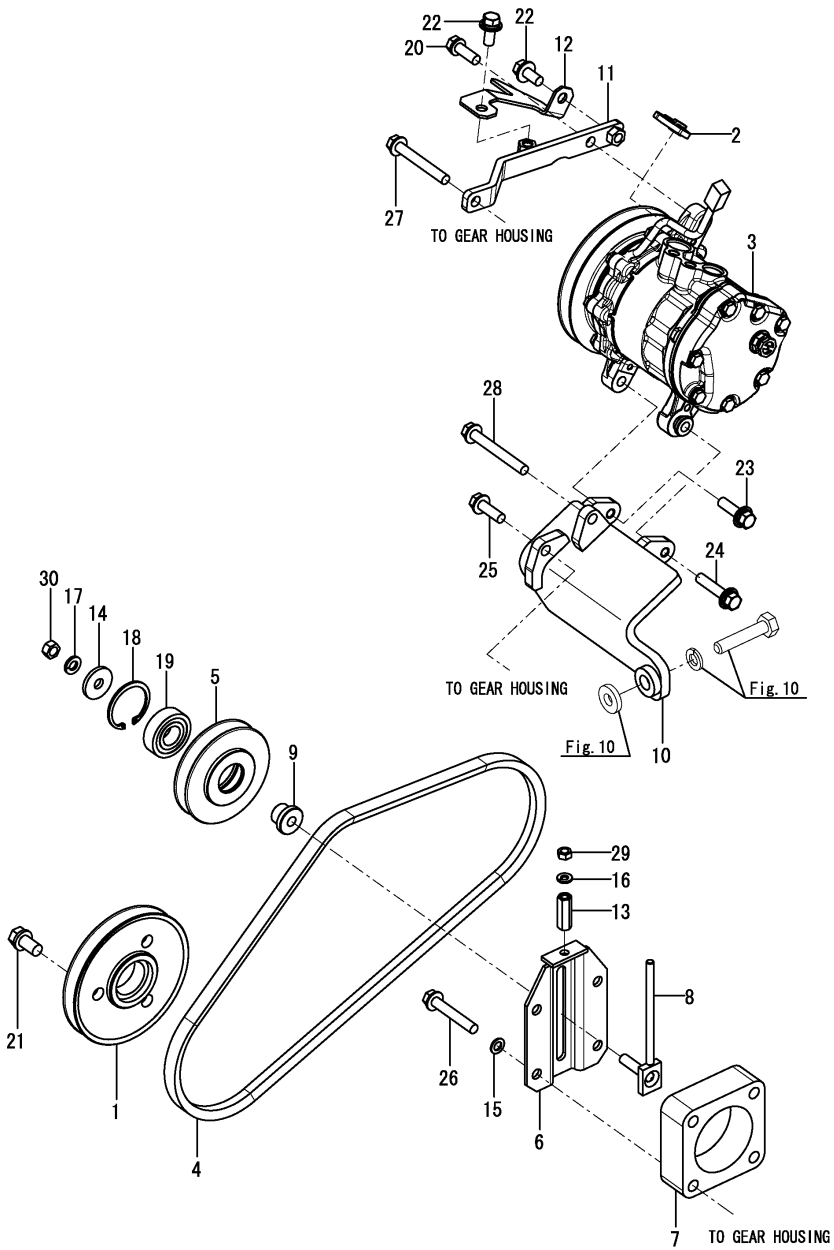

(A)=VIO35-6A P(US) (D)=
(B)=VIO35-6A C(US) (E)=
(C)= (F)=

No.	Lev.	Parts No.	Description	Q'ty (A)	(B)	(C)	(D)	(E)	(F)	I	R
1	1	172A47-11200	PULLEY		1						
2	1	172137-16560	BAND		1						
3	1	172B03-18100	COMPRESSOR ASSY		1						
4	1	172460-18120	V-BELT		1						
5	1	172445-18131	PULLEY, TENSION		1						
6	1	172165-18601	BRACKET ASSY, PULLEY		1						
7	1	172491-18620	PLATE		1						
8	1	172165-18630	ADJUSTER ASSY		1						
9	1	172165-18670	BOSS		1						
10	1	172B03-18810	BRACKET ASSY, COMP-A		1						
11	1	172B03-18880	BRACKET ASSY, COMP-B		1						
12	1	172B03-18900	COVER, COMPRESSOR		1						
13	1	172164-19310	NUT		1						
14	1	1A1040-43900	WASHER, SPRING		1						
15	1	22190-080002	WASHER, SEAL 6		4						
16	1	22217-060000	WASHER, SPRING 6		1						
17	1	22217-080000	WASHER, SPRING 8		1						
18	1	22252-000400	RING, 40		1						
19	1	24104-062030	BEARING, 6203UUC3		1						
20	1	26013-080252	BOLT, M8X 25		1						
21	1	26013-100202	BOLT, M10X 20		3						
22	1	26014-080202	BOLT, M8X 20		2						
23	1	26014-080302	BOLT, M8X 30		1						
24	1	26014-080402	BOLT, M8X 40		1						
25	1	26106-080252	BOLT, M8X 25 PLATED		1						
26	1	26106-080502	BOLT, M8X 50 PLATED		4						
27	1	26106-080602	BOLT, M8X 60 PLATED		1						
28	1	26106-080652	BOLT, M8X 65 PLATED		1						
29	1	26716-060002	NUT, M6		1						
30	1	26716-080002	NUT, M8		1						

N:Old $\frac{\text{Yes}}{\text{No}}$ New, Q:Old $\frac{\text{No}}{\text{Yes}}$ New, R:Old $\frac{\text{Yes}}{\text{Yes}}$ New, S:Old $\frac{\text{No}}{\text{No}}$ New, W:Add, Z:Discontinued, F:Interchangeable by set, K:Q'ty Change

Copyright (C) YANMAR CO., LTD. All RightsReserved.

Fig.35. AIR CONDITIONER(CONDENSER)

(A)=VIO35-6A P(US) (D)=
(B)=VIO35-6A C(US) (E)=
(C)= (F)=

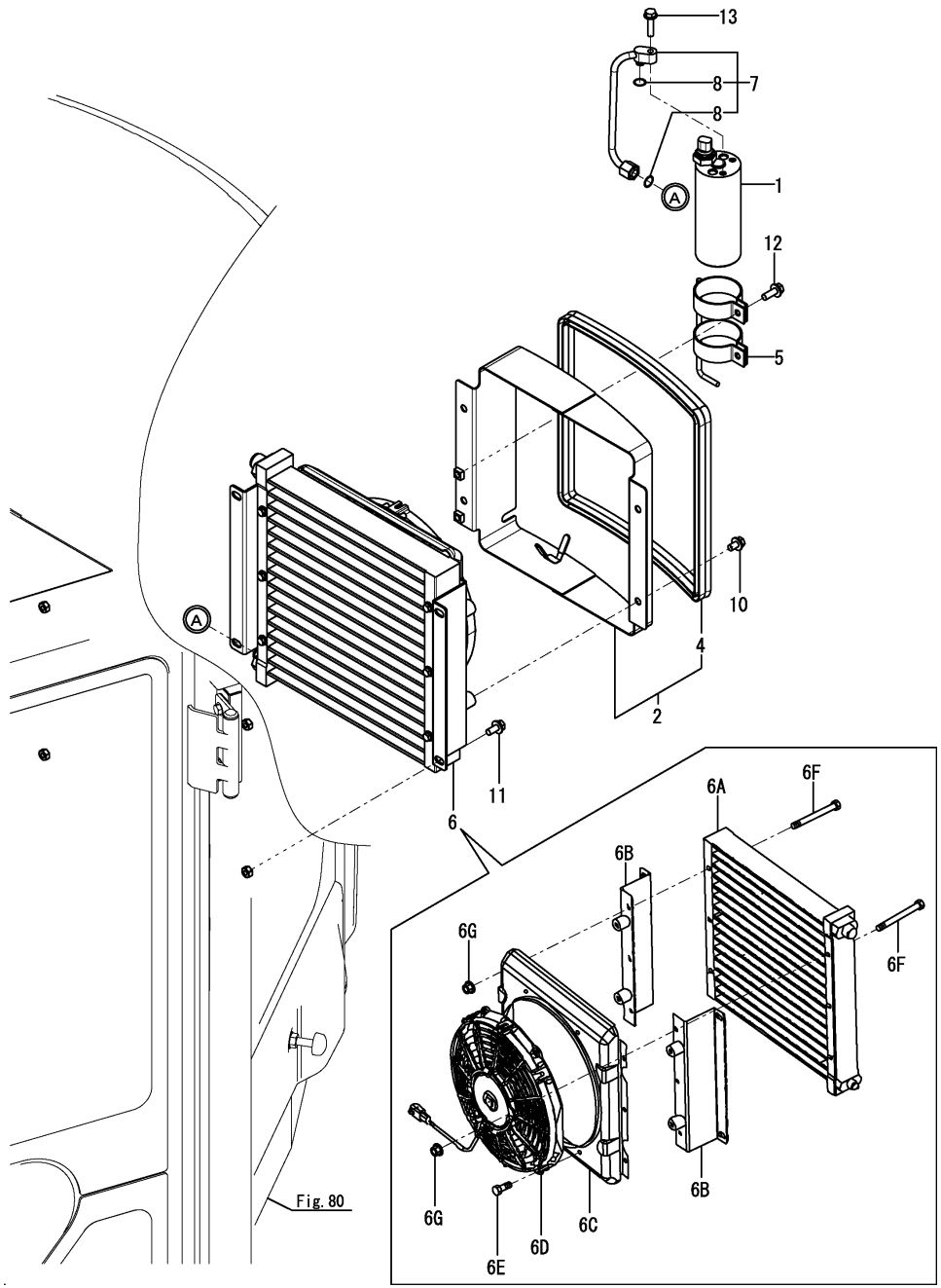

No.	Lev.	Parts No.	Description	Q'ty (A)	(B)	(C)	(D)	(E)	(F)	I	R
1	1	172B06-18450	DRIER, RECEIVER		1						
2	1	172B03-18940	DUCT ASSY		1						
4	2	172A64-65160	SEAL, 1170		1						
5	1	172B03-18950	BRACKET ASSY, R/D		1						
6	1	172B03-19680	CONDENSER ASSY		1						
6A	2	172B06-19260	CONDENSER		1					W	
		(B=MXXXXX)									
6B	2	172B03-19650	BRACKET ASSY, COND		2					W	
		(B=MXXXXX)									
6C	2	172B03-19660	COVER ASSY, COND FAN		1					W	
		(B=MXXXXX)									
6D	2	172B03-19670	MOTOR ASSY, FAN		1					W	
		(B=MXXXXX)									
6E	2	26106-060162	BOLT, M6X 16 PLATED		4					W	
		(B=MXXXXX)									
6F	2	26106-060602	BOLT, M6X 60 PLATED		6					W	
		(B=MXXXXX)									
6G	2	26366-060002	NUT, M6		6					W	
		(B=MXXXXX)									
7	1	172B03-19780	PIPE ASSY		1						
8	2	172B06-18700	O-RING		2						
10	1	26014-080162	BOLT, M8X 16		4						
11	1	26014-080202	BOLT, M8X 20		4						
12	1	26014-080252	BOLT, M8X 25		2						
13	1	26106-060252	BOLT, M6X 25 PLATED		1						

N:Old ◄Yes/No► New, Q:Old ◄No/Yes► New, R:Old ◄Yes/Yes► New, S:Old ◄No/No► New, W:Add, Z:Discontinued, F:Interchangeable by set, K:Q'ty Change

Copyright (C) YANMAR CO., LTD. All RightsReserved.

Fig.36. HEATER(UNIT)

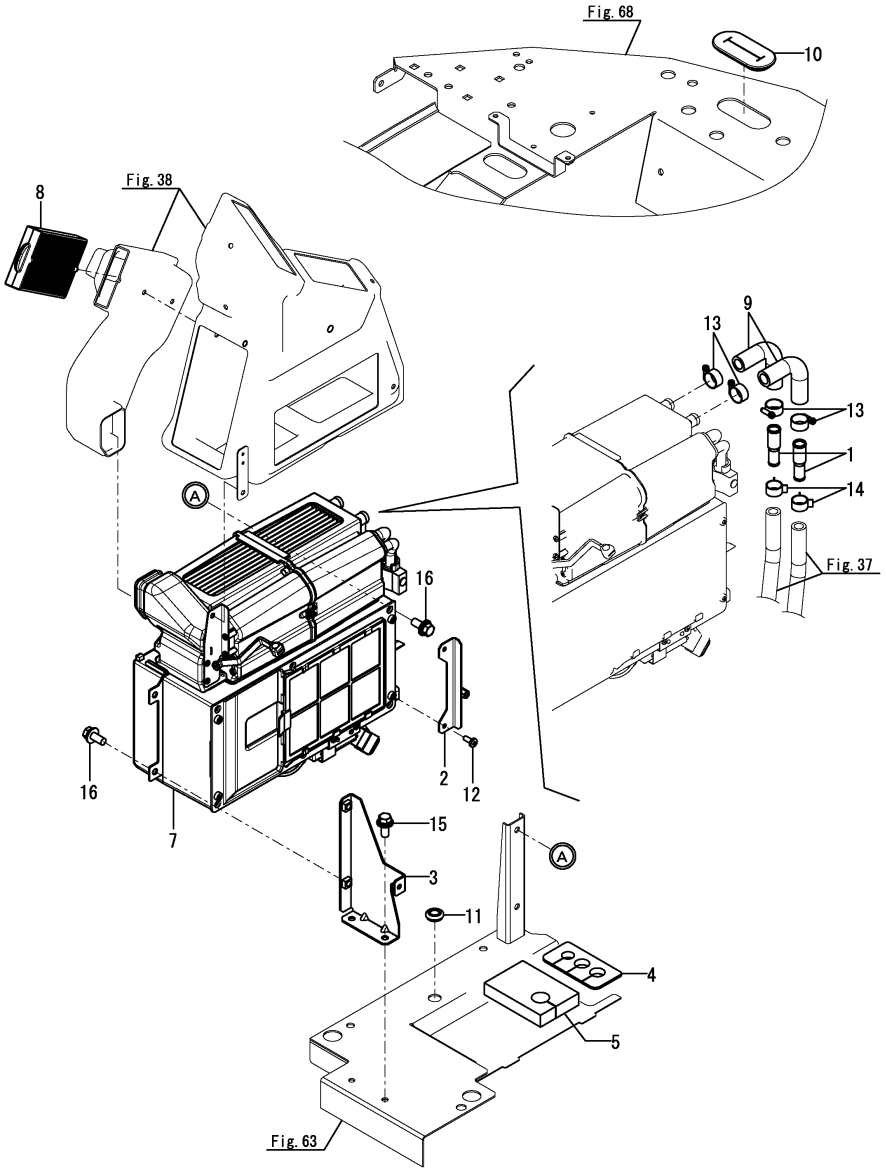

(A)=VIO35-6A P(US)
(B)=VIO35-6A C(US)
(C)=
(D)=
(E)=
(F)=

No.	Lev.	Parts No.	Description	Q'ty (A)	(B)	(C)	(D)	(E)	(F)	I	R
1	1	172455-17930	JOINT, HOSE		2						
2	1	172B03-18310	STAY ASSY		1						
3	1	172B03-18350	BRACKET ASSY, AC F		1						
4	1	172B03-18560	GROMMET		1						
5	1	172B03-18580	SPONGE		1						
7	1	172B03-17600	HEATER ASSY		1						1
8	1	172B06-18420	FILTER, AIR		1						
9	1	172B03-19920	HOSE, HEATER ELBOW		2						
10	1	172B03-63450	GROMMET		1						
11	1	172183-76210	GROMMET		1						
12	1	22877-500120	SCREW, 5X12		2						
13	1	23001-022000	CLAMP, HOSE 22		4						
14	1	23080-018000	CLAMP, 18		2						
15	1	26014-080202	BOLT, M8X 20		2						
16	1	26014-080202	BOLT, M8X 20		4						

Remarks
(1)Inner parts are shown in Fig.150(36A).

N:Old $\xleftarrow[\text{No}]{\text{Yes}}$ New, Q:Old $\xleftarrow[\text{Yes}]{\text{No}}$ New, R:Old $\xleftarrow[\text{Yes}]{\text{Yes}}$ New, S:Old $\xleftarrow[\text{No}]{\text{No}}$ New, W:Add, Z:Discontinued, F:Interchangeable by set, K:Q'ty Change

Copyright (C) YANMAR CO., LTD. All RightsReserved.

Fig.150. (36A)HEATER(UNIT INNETR PARTS)

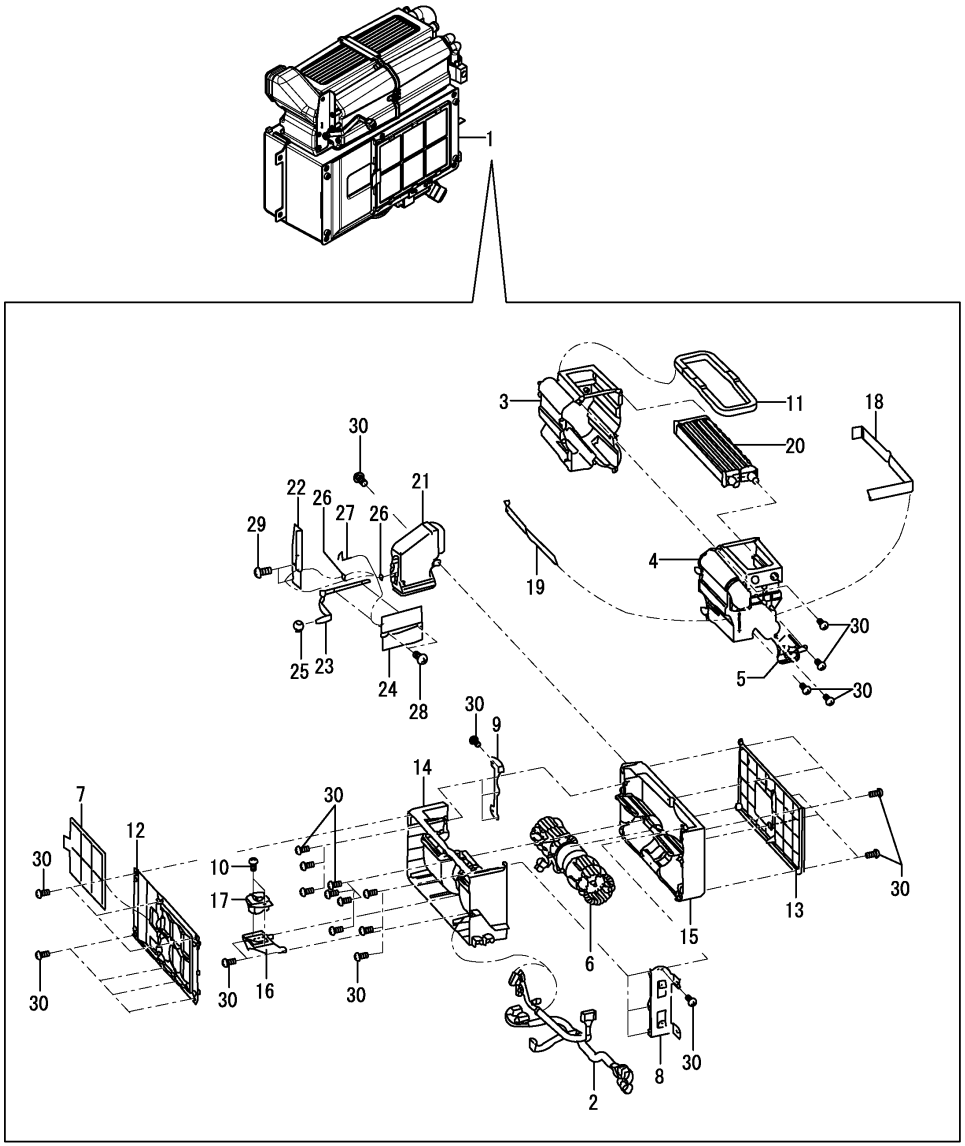

(A)=VIO35-6A P(US)
(B)=VIO35-6A C(US)
(C)=
(D)=
(E)=
(F)=

No.	Lev.	Parts No.	Description	Q'ty (A)	(B)	(C)	(D)	(E)	(F)	I	R
1	1	172B03-17600	HEATER ASSY		1						
2	2	172B03-17610	HARNESS ASSY, HEATER		1						
3	2	172B03-17620	CASE, UPPER FEMALE		1						
4	2	172B03-17630	CASE, UPPER MALE		1						
5	2	172B03-17640	COVER, HEATER		1						
6	2	172B06-18970	MOTOR ASSY,BLOWER		1						
7	2	172B03-19120	FILTER, REC		1						
8	2	172B03-19130	BRACKET, 1		1						
9	2	172B03-19140	BRACKET, 2		1						
10	2	172B06-19150	SCREW, PAN HEAD		2						
11	2	172B03-19220	SEAL, OUTLET		1						
12	2	172B03-19230	COVER, FRONT		1						
13	2	172B03-19240	COVER, BACK		1						
14	2	172B03-19250	CASE ASSY, LOW FRONT		1						
15	2	172B03-19260	CASE ASSY, LOW BACK		1						
16	2	172B03-19270	MOUNT, RESISTOR		1						
17	2	172B03-19320	RESISTOR		1						
18	2	172B03-19370	SEAL, AC-UNIT 1		1						
19	2	172B03-19380	SEAL, AC-UNIT 2		1						
20	2	172B03-19440	HEATER ASSY		1						
21	2	172B03-19450	DUCT ASSY		1						
22	2	172B03-19460	BRACKET, DUCT		1						
23	2	172B03-19470	LEVER ASSY, DOOR		1						
24	2	172B03-19480	DOOR ASSY		1						
25	2	172B03-19490	KNOB		1						
26	2	172B03-19500	SPACER, C		2						
27	2	172B03-19510	SPRING		1						
28	2	172B03-19520	SCREW, 3X6		2						
29	2	172B03-19530	SCREW, 4X10		2						
30	2	172B03-19540	SCREW, 4X16		34						

N:Old $\xleftarrow[\text{No}]{\text{Yes}}$ New, Q:Old $\xleftarrow[\text{Yes}]{\text{No}}$ New, R:Old $\xleftarrow[\text{Yes}]{\text{Yes}}$ New, S:Old $\xleftarrow[\text{No}]{\text{No}}$ New, W:Add, Z:Discontinued, F:Interchangeable by set, K:Q'ty Change

Copyright (C) YANMAR CO., LTD. All RightsReserved.

Fig.37. HEATER(PIPING)

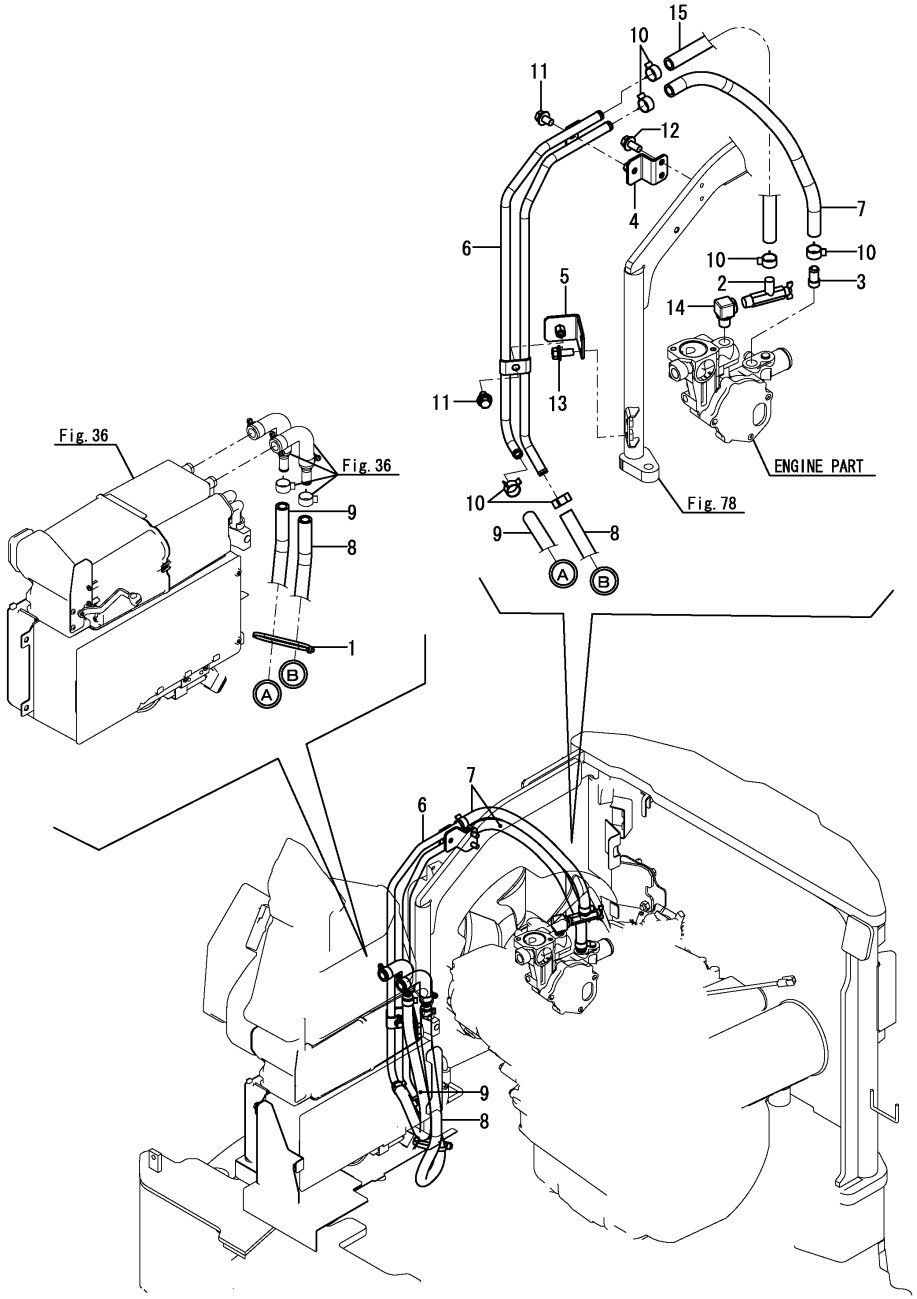

(A)=VIO35-6A P(US)
(B)=VIO35-6A C(US)
(C)=
(D)=
(E)=
(F)=

No.	Lev.	Parts No.	Description	Q'ty (A)	(B)	(C)	(D)	(E)	(F)	I	R
1	1	172126-11510	BAND		1						
2	1	172425-17630	VALVE ASSY, HEATER		1						
3	1	172124-17640	JOINT, PIPE		1						
4	1	172B03-18600	STAY ASSY, PIPE		1						
5	1	172B03-18640	STAY ASSY, PIPE		1						
6	1	172B03-19710	PIPE ASSY, HEATER		1						
7	1	172B03-19860	HOSE, HEATER 420		1						
8	1	172B03-19950	HOSE, HEATER 640		1						
9	1	172B03-19980	HOSE, HEATER IN		1						
10	1	23080-018000	CLAMP, 18		6						
11	1	26014-080162	BOLT, M8X 16		2						
12	1	26014-080202	BOLT, M8X 20		2						
13	1	26014-080202	BOLT, M8X 20		2						
14	1	933166-24240	ELBOW, SWIVEL JOINT		1						
15	1	172B03-19860	HOSE, HEATER 420		1						
15-1	1	172B03-19870	HOSE, HEATER 380		1					N	
		(B=M60540)									

N:Old $\frac{\text{Yes}}{\text{No}}$ New, Q:Old $\frac{\text{No}}{\text{Yes}}$ New, R:Old $\frac{\text{Yes}}{\text{Yes}}$ New, S:Old $\frac{\text{No}}{\text{No}}$ New, W:Add, Z:Discontinued, F:Interchangeable by set, K:Q'ty Change

Copyright (C) YANMAR CO., LTD. All RightsReserved.

Fig.38. DUCT(AIR CONDITIONER & HEATER)

(A)=VIO35-6A P(US)
(B)=VIO35-6A C(US)
(C)=
(D)=
(E)=
(F)=

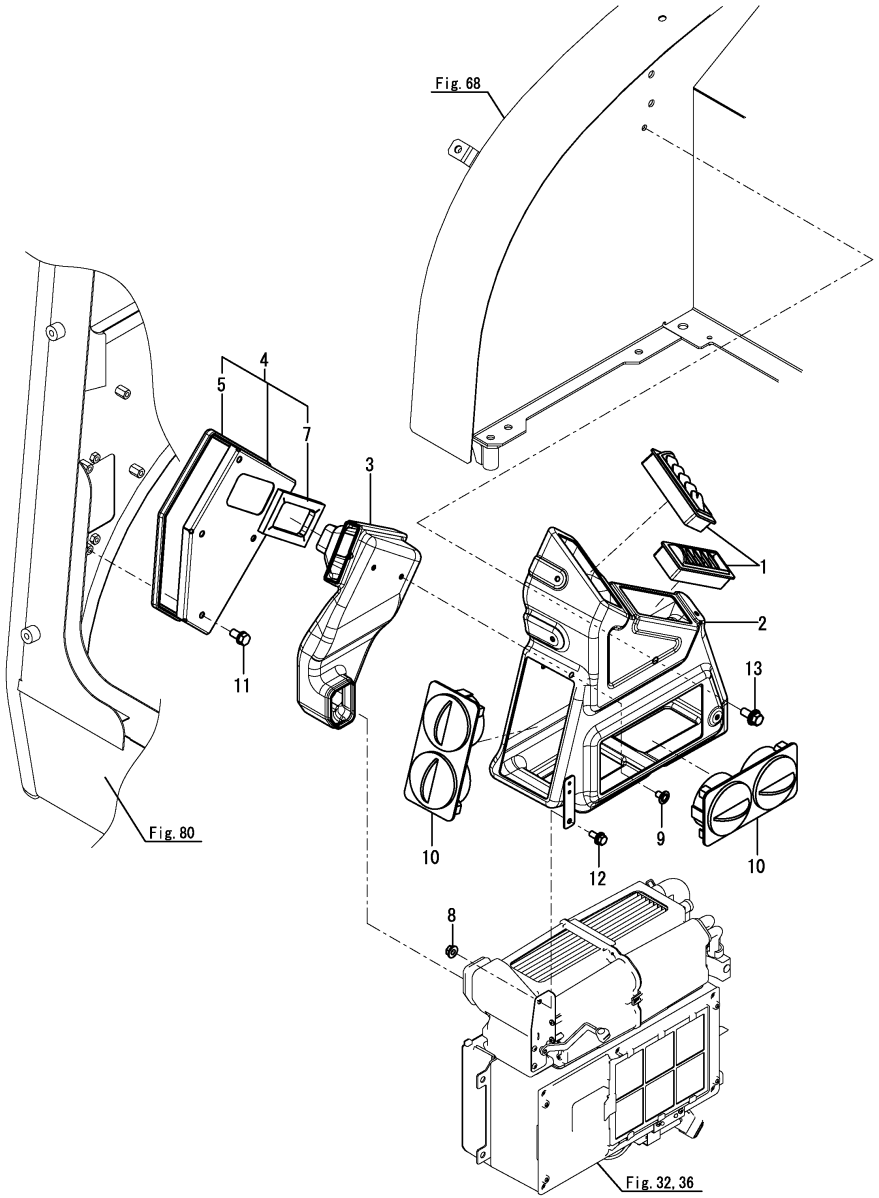

No.	Lev.	Parts No.	Description	Q'ty (A)	(B)	(C)	(D)	(E)	(F)	I	R
1	1	172458-17700	GRILLE		2						
2	1	172B03-18700	DUCT ASSY		1						
3	1	172B03-18740	DUCT		1						
4	1	172B03-18760	DUCT ASSY, INTAKE		1						
5	2	172A65-13290	TRIM		1						
7	2	172B03-18780	SEAL, DUCT		1						
8	1	194990-22130	NUT, M6		1						
9	1	1A8110-84210	RIVET		2						1
9-1	1	1A8060-84280	RIVET, PUSH		2					S	2
		(B=MAF001)									
10	1	1A7030-87411	GRILLE ASSY, FRONT		2						
11	1	26013-080162	BOLT, SPRING M8X 16		4						
12	1	26014-060162	BOLT, M6X 16		1						
13	1	26014-080202	BOLT, M8X 20		1						

Remarks
(1)Color = LIGHT GRAY.
(2)Color = BLACK.

N:Old $\frac{\text{Yes}}{\text{No}}$ New, Q:Old $\frac{\text{No}}{\text{Yes}}$ New, R:Old $\frac{\text{Yes}}{\text{Yes}}$ New, S:Old $\frac{\text{No}}{\text{No}}$ New, W:Add, Z:Discontinued, F:Interchangeable by set, K:Q'ty Change

Copyright (C) YANMAR CO., LTD. All RightsReserved.

Fig.39. SPROCKET

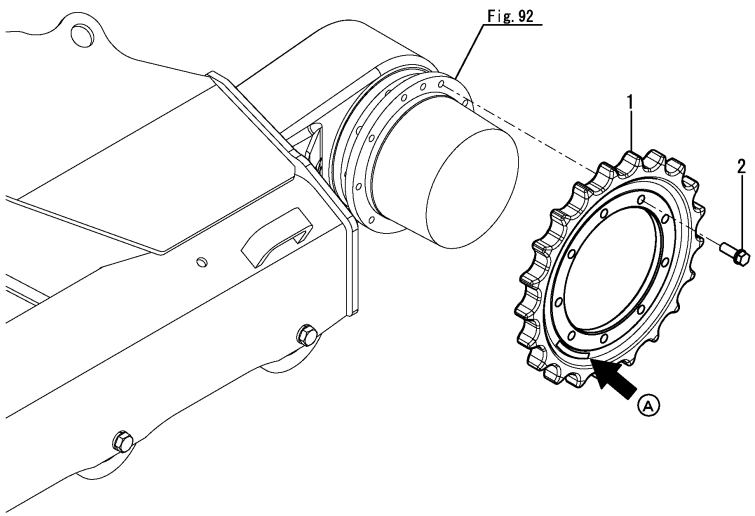

(A)=VIO35-6A P(US)
(B)=VIO35-6A C(US)
(C)=
(D)=
(E)=
(F)=

No.	Lev.	Parts No.	Description	Q'ty (A)	(B)	(C)	(D)	(E)	(F)	I	R
1	1	172141-29111	SPROCKET	2	2						
1-1	1	172141-29112	SPROCKET	2	2					N	
	(A=M61185)	(B=M61185)									
2	1	26013-120352	BOLT, SPRING M12X 35	18	18						

Remarks
* A : There is parts No..

N:Old $\xleftarrow[\text{No}]{\text{Yes}}$ New, Q:Old $\xleftarrow[\text{Yes}]{\text{No}}$ New, R:Old $\xleftarrow[\text{Yes}]{\text{Yes}}$ New, S:Old $\xleftarrow[\text{No}]{\text{No}}$ New, W:Add, Z:Discontinued, F:Interchangeable by set, K:Q'ty Change

Copyright (C) YANMAR CO., LTD. All RightsReserved.

Fig.40. IDLER & ADJUST(RUBBER CRAWLER SPEC.)

(A)=VIO35-6A P(US)
(B)=VIO35-6A C(US)
(C)=
(D)=
(E)=
(F)=

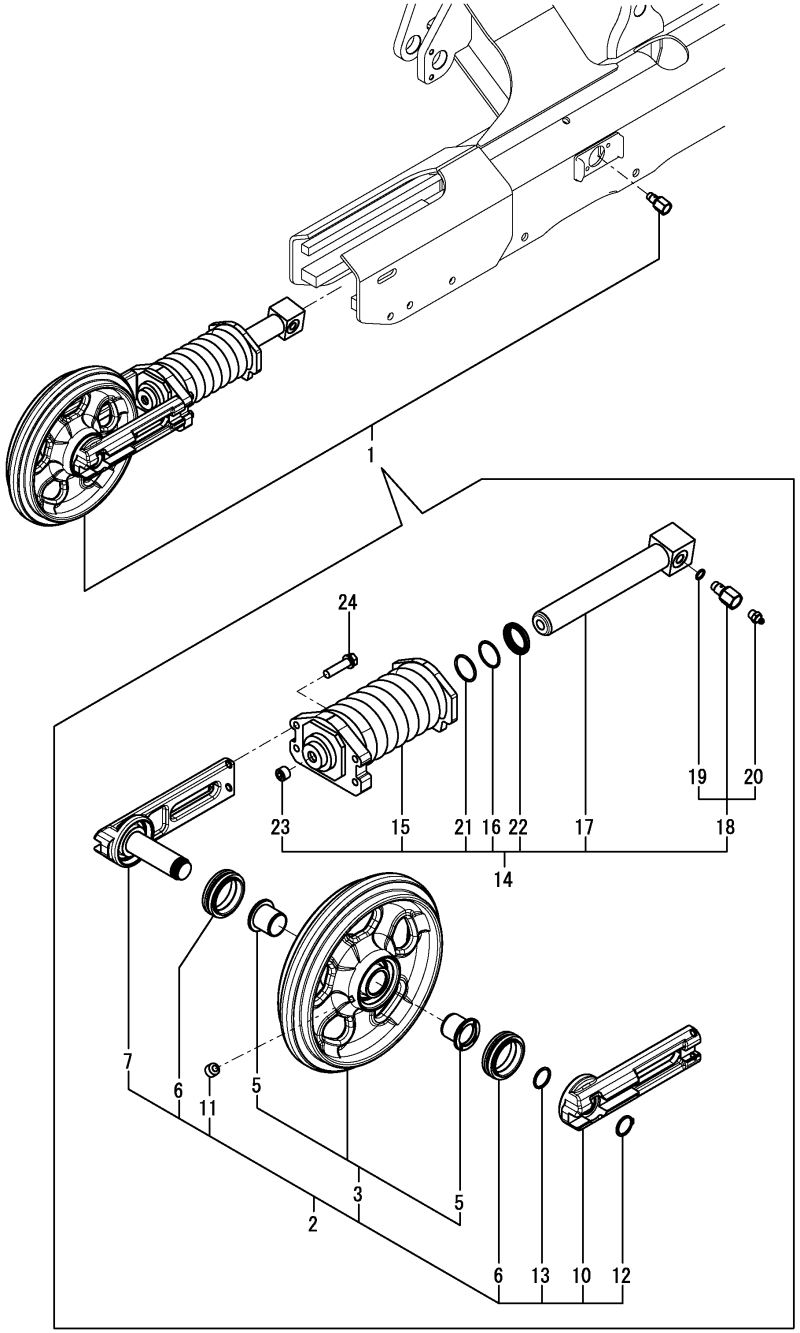

No.	Lev.	Parts No.	Description	Q'ty (A)	(B)	(C)	(D)	(E)	(F)	I	R
1	1	172B03-37100	IDLER ASSY, RUBBER	2	2						
2	2	172B03-37110	IDLER ASSY, RUBBER	2	2						
3	3	172458-37102	IDLER, 295	2	2						
5	4	172A77-37370	BUSH	4	4						
6	3	172458-37120	SEAL, FLOATING	4	4						
7	3	172458-37131	SHAFT ASSY, IDLER	2	2						
10	3	172458-37151	COVER, SEAL	2	2						
11	3	194630-42120	PLUG, PT1/8	2	2						
12	3	22242-000300	RING, 30	2	2						
13	3	24321-000300	O-RING, 1AG30.0	2	2						
14	2	172B03-37700	ADJUSTER ASSY	2	2						
15	3	172458-37700	SPRING ASSY, CRAWLER	2	2						
16	3	172460-37750	RING, BACK UP	2	2						
17	3	172B03-37780	PISTON ASSY, ADJUST	2	2						
18	3	172B03-37840	VALVE ASSY, NIPPLE	2	2						
19	4	172B03-37850	SEAL, SQARE	2	2						
20	4	24761-020000	NIPPLE, GREASE PT1/8	2	2						
21	3	24325-000400	O-RING, 1BG40.0	2	2						
22	3	933111-23600	SEAL, OIL	2	2						
23	3	933171-13691	PLUG	2	2						
24	2	26013-100402	BOLT, M10X 40	8	8						

N:Old $\xleftarrow[\text{No}]{\text{Yes}}$ New, Q:Old $\xleftarrow[\text{Yes}]{\text{No}}$ New, R:Old $\xleftarrow[\text{Yes}]{\text{Yes}}$ New, S:Old $\xleftarrow[\text{No}]{\text{No}}$ New, W:Add, Z:Discontinued, F:Interchangeable by set, K:Q'ty Change

Copyright (C) YANMAR CO., LTD. All RightsReserved.

Fig.41. IDLER & ADJUST(IRON CRAWLER SPEC.)

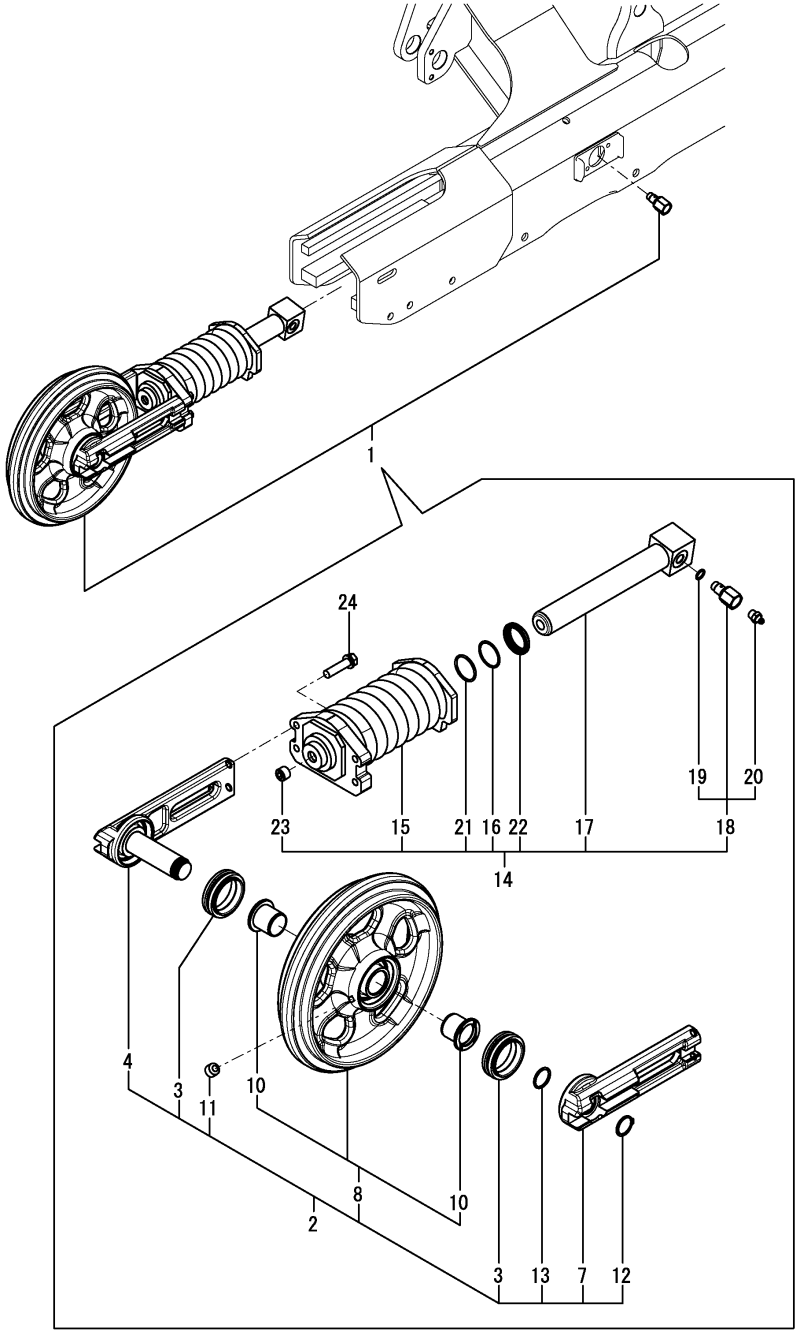

(A)=VIO35-6A P(US)
(B)=VIO35-6A C(US)
(C)=
(D)=
(E)=
(F)=

No.	Lev.	Parts No.	Description	Q'ty (A)	(B)	(C)	(D)	(E)	(F)	I	R
1	1	172B03-37120	IDLER ASSY, IRON	2	2						
2	2	172B03-37130	IDLER ASSY, IRON	2	2						
3	3	172458-37120	SEAL, FLOATING	4	4						
4	3	172458-37131	SHAFT ASSY, IDLER	2	2						
7	3	172458-37151	COVER, SEAL	2	2						
8	3	172458-37172	IDLER, 280	2	2						
10	4	172A77-37370	BUSH	4	4						
11	3	194630-42120	PLUG, PT1/8	2	2						
12	3	22242-000300	RING, 30	2	2						
13	3	24321-000300	O-RING, 1AG30.0	2	2						
14	2	172B03-37700	ADJUSTER ASSY	2	2						
15	3	172458-37700	SPRING ASSY, CRAWLER	2	2						
16	3	172460-37750	RING, BACK UP	2	2						
17	3	172B03-37780	PISTON ASSY, ADJUST	2	2						
18	3	172B03-37840	VALVE ASSY, NIPPLE	2	2						
19	4	172B03-37850	SEAL, SQARE	2	2						
20	4	24761-020000	NIPPLE, GREASE PT1/8	2	2						
21	3	24325-000400	O-RING, 1BG40.0	2	2						
22	3	933111-23600	SEAL, OIL	2	2						
23	3	933171-13691	PLUG	2	2						
24	2	26013-100402	BOLT, M10X 40	8	8						

N:Old $\frac{\text{Yes}}{\text{No}}$ New, Q:Old $\frac{\text{No}}{\text{Yes}}$ New, R:Old $\frac{\text{Yes}}{\text{Yes}}$ New, S:Old $\frac{\text{No}}{\text{No}}$ New, W:Add, Z:Discontinued, F:Interchangeable by set, K:Q'ty Change

Copyright (C) YANMAR CO., LTD. All RightsReserved.

Fig.42. TRACK ROLLER(Y SPEC.)(TO M61258)

(A)=VIO35-6A P(US) (D)=
(B)=VIO35-6A C(US) (E)=
(C)= (F)=

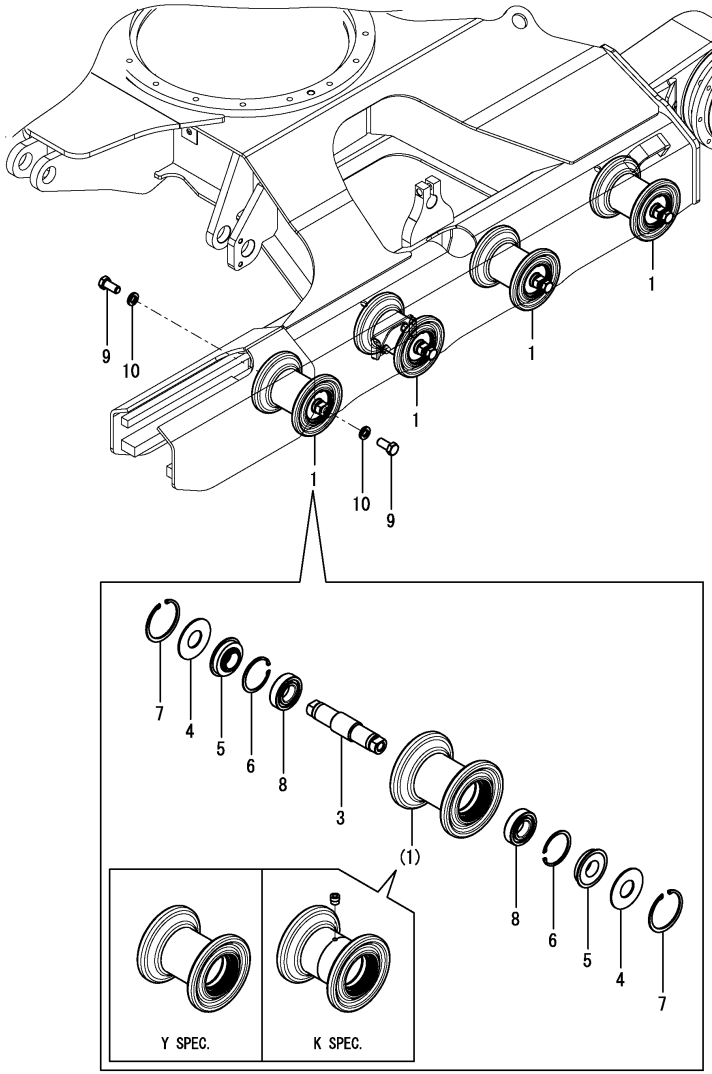

No.	Lev.	Parts No.	Description	Q'ty (A)	(B)	(C)	(D)	(E)	(F)	I	R
1	1	172441-37302	ROLLER ASSY,TRACK	8	8					Z	1
	(A=M61259)	(B=M61259)									
3	2	172422-37310	SHAFT, ROLLER	8	8						
4	2	172141-37320	SPACER	16	16						
5	2	1A1030-48250	SEAL,OIL QLF30621218	16	16						
6	2	22252-000620	RING, 62	16	16						
7	2	22252-000750	RING, 75	16	16						
8	2	933111-73800	BEARING, BALL	16	16						
9	1	172490-37320	BOLT	16	16						
10	1	22217-160000	WASHER, SPRING 16	16	16						

Remarks
(1)Replacement with Fig.154(42A) No.1.
The inner parts are not compatible.

N:Old $\xleftarrow[\text{No}]{\text{Yes}}$ New, Q:Old $\xleftarrow[\text{Yes}]{\text{No}}$ New, R:Old $\xleftarrow[\text{Yes}]{\text{Yes}}$ New, S:Old $\xleftarrow[\text{No}]{\text{No}}$ New, W:Add, Z:Discontinued, F:Interchangeable by set, K:Q'ty Change

Copyright (C) YANMAR CO., LTD. All RightsReserved.

Fig.189. (42A)TRACK ROLLER(K SPEC.)(FROM M61259)

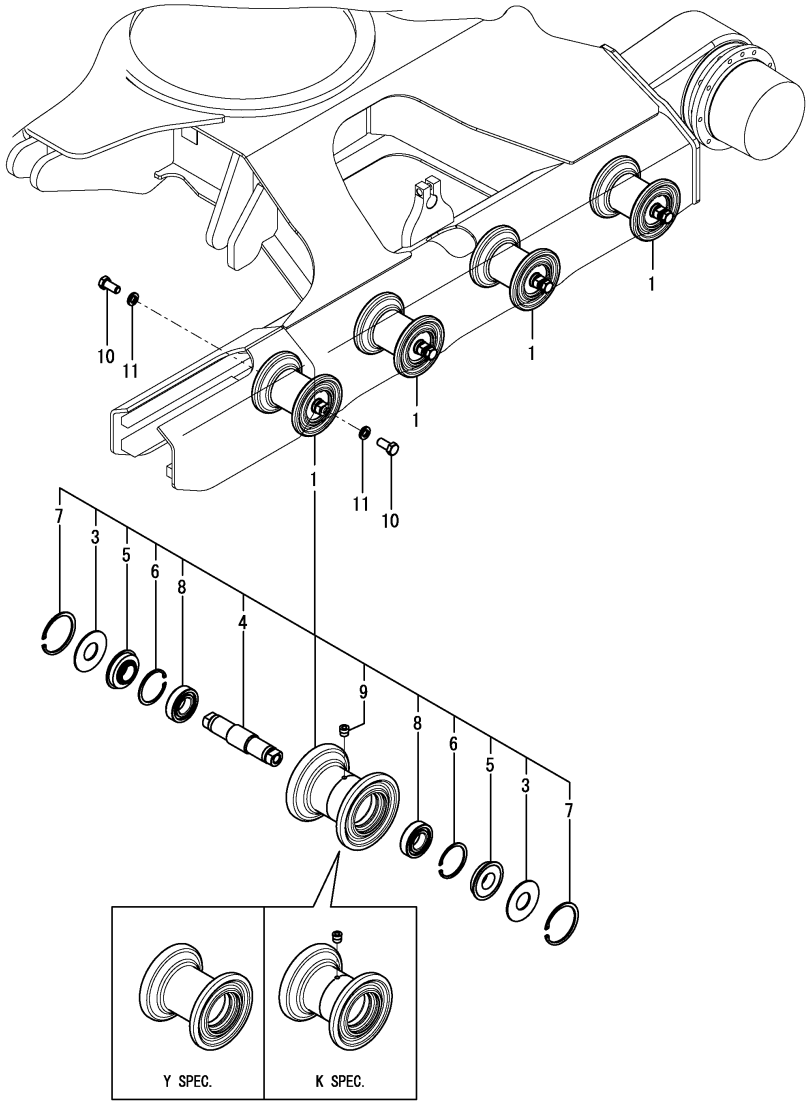

(A)=VIO35-6A P(US)
(B)=VIO35-6A C(US)
(C)=
(D)=
(E)=
(F)=

No.	Lev.	Parts No.	Description	Q'ty (A)	(B)	(C)	(D)	(E)	(F)	I	R
1	1	172B03-37300	ROLLER ASSY,LOWER	8	8					W	
	(A=M61259)	(B=M61259)									
3	2	172141-37320	SPACER	16	16						
4	2	172B03-37320	SHAFT	8	8						
5	2	1A1030-48250	SEAL,OIL QLF30621218	16	16						
6	2	22252-000620	RING, 62	16	16						
7	2	22252-000750	RING, 75	16	16						
8	2	24101-062064	BEARING, BALL 6206	16	16						
9	2	933171-13691	PLUG	8	8						
10	1	172490-37320	BOLT	16	16						
11	1	22217-160000	WASHER, SPRING 16	16	16						

Remarks
*Track roller(Y spec.) are shown in Fig.42.
The inner parts are not compatible.

N:Old $\frac{\text{Yes}}{\text{No}}$ New, Q:Old $\frac{\text{No}}{\text{Yes}}$ New, R:Old $\frac{\text{Yes}}{\text{Yes}}$ New, S:Old $\frac{\text{No}}{\text{No}}$ New, W:Add, Z:Discontinued, F:Interchangeable by set, K:Q'ty Change

Copyright (C) YANMAR CO., LTD. All RightsReserved.

Fig.43. CARRIER ROLLER

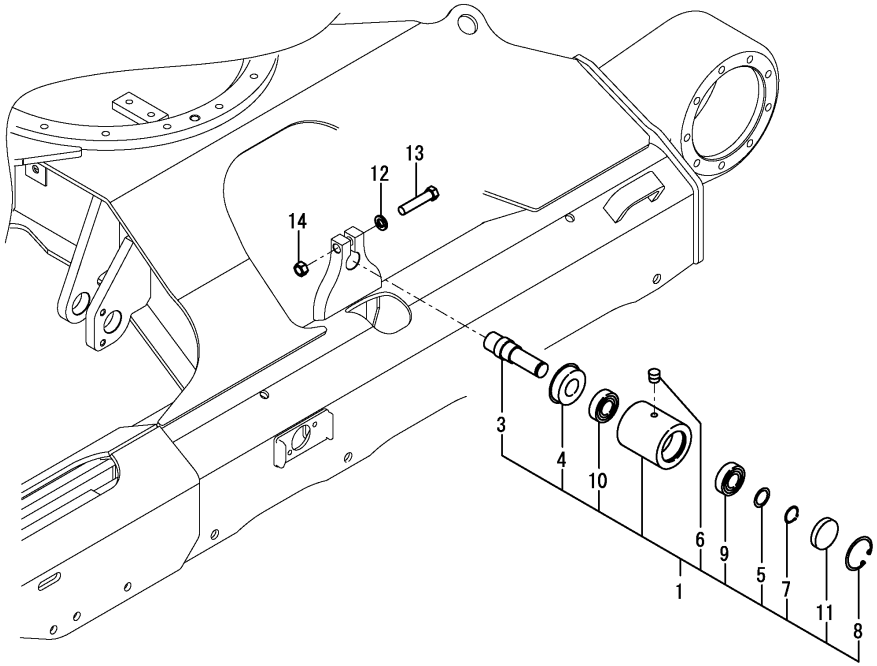

(A)=VIO35-6A P(US)
(B)=VIO35-6A C(US)
(C)=
(D)=
(E)=
(F)=

No.	Lev.	Parts No.	Description	Q'ty (A)	(B)	(C)	(D)	(E)	(F)	I	R
1	1	172458-37500-2	ROLLER ASSY, CARRIER	2	2						
3	2	172458-37570	SHAFT	2	2						
4	2	172458-37580	SEAL, OIL	2	2						
5	2	172458-37590	COLLAR	2	2						
6	2	194630-42120	PLUG, PT1/8	2	2						
7	2	22242-000250	RING, 25	2	2						
8	2	22252-000521	RING, 52	2	2						
9	2	24101-062054	BEARING, BALL 6205	2	2						
10	2	24102-062054	BEARING, BALL 6205U	2	2						
11	2	27260-520000	PLUG, 52	2	2						
12	1	22217-140000	WASHER, SPRING 14	2	2						
13	1	26116-140652	BOLT, M14X 65 PLATED	2	2						
14	1	26716-140002	NUT, M14	2	2						

N:Old ◄Yes/No► New, Q:Old ◄No/Yes► New, R:Old ◄Yes/Yes► New, S:Old ◄No/No► New, W:Add, Z:Discontinued, F:Interchangeable by set, K:Q'ty Change

Copyright (C) YANMAR CO., LTD. All RightsReserved.

Fig.44. CRAWLER

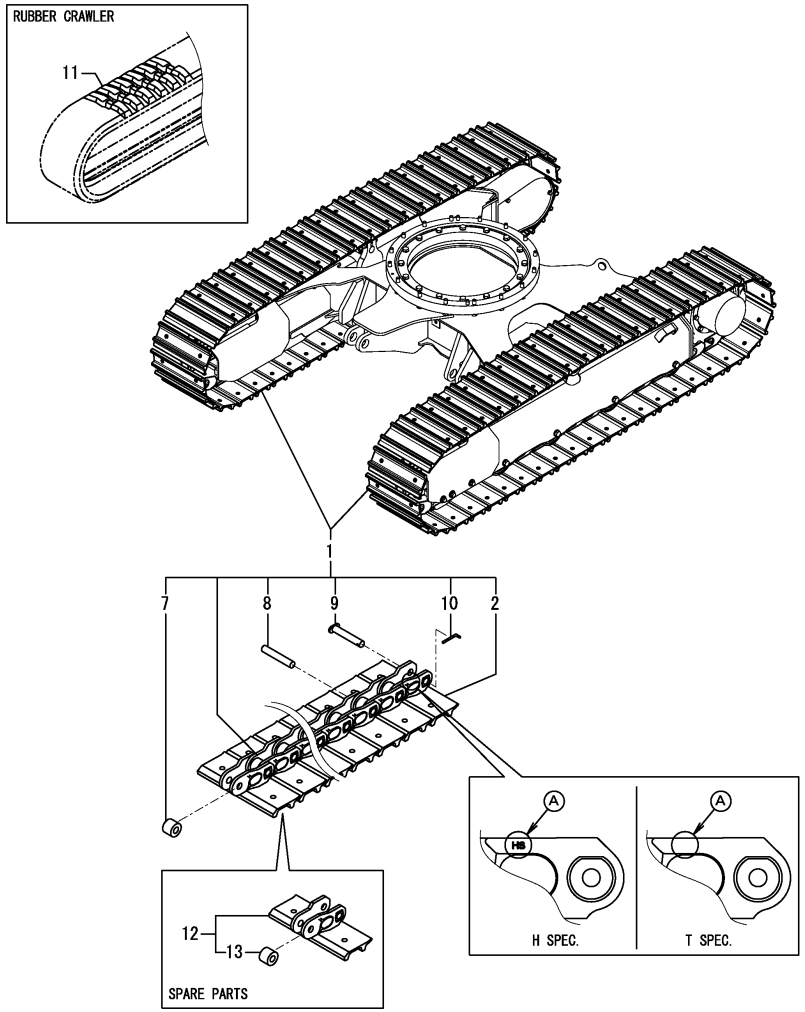

(A)=VIO35-6A P(US) (D)=
(B)=VIO35-6A C(US) (E)=
(C)= (F)=

No.	Lev.	Parts No.	Description	Q'ty (A)	(B)	(C)	(D)	(E)	(F)	I	R
1	1	172B03-38100	SHOE ASSY, TRACK 300	2	2					Z	1
	(A=M61870)	(B=M61870)									
2	2	172B03-38110	PLATE, SHOE 300	88	88						
7	2	172A85-38200	BUSH, TRACK	88	88						
8	2	172A85-38210	PIN, TRACK	86	86						
9	2	172A85-38220	PIN, MASTER	2	2						
10	2	172A85-38230	PIN, CLAMPING	2	2						
11	1	172B03-38600	CRAWLER, RUBBER 300	2	2						
12	1	172B03-38300	TRACK, MASTER 300	1	1					W	
	(A=*2012.11.)	(B=*2012.11.)									
13	2	172A85-38200	BUSH, TRACK	1	1						

Remarks
(1)H specification. : Interchangeable by Fig.197(44A) No.1 T specification.
The inner parts are not compatible.
H specification. : Letters HS are stamped in A part.
T specification. : Letters HS are not stamped in A part.

N:Old ◄Yes/No► New, Q:Old ◄No/Yes► New, R:Old ◄Yes/Yes► New, S:Old ◄No/No► New, W:Add, Z:Discontinued, F:Interchangeable by set, K:Q'ty Change

Copyright (C) YANMAR CO., LTD. All RightsReserved.

Fig.197. (44A)CRAWLER(T SPEC.)

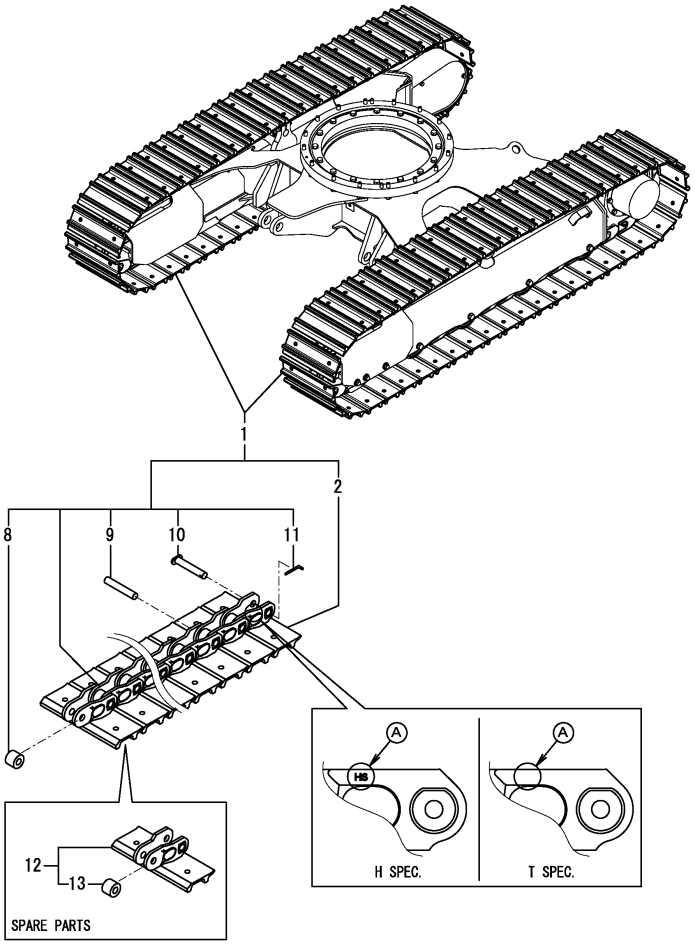

Remarks
* Iron crawler (H specification) are shown in Fig.44.
The inner parts are not compatible.
H specification. : Letters HS are stamped in A part.
T specification. : Letters HS are not stamped in A part.

(A)=VIO35-6A P(US) (D)=
(B)=VIO35-6A C(US) (E)=
(C)= (F)=

No.	Lev.	Parts No.	Description	Q'ty (A)	(B)	(C)	(D)	(E)	(F)	I	R
1	1	172B03-38400	SHOE ASSY, TRACK 300	1	1					W	
	(A=M61870)	(B=M61870)									
2	2	172B03-38410	SHOE, TRACK 300	44	44						
8	3	172458-38201	BUSH, TRUCK	44	44						
9	3	172458-38210	PIN, TRUCK	43	43						
10	3	172458-38220	PIN, MASTER	1	1						
11	3	172458-38230	PIN, STOP	1	1						
12	1	172B03-38500	TRACK, MASTER 300	1	1						
13	2	172458-38201	BUSH, TRUCK	1	1						

N:Old ◄Yes/No► New, Q:Old ◄No/Yes► New, R:Old ◄Yes/Yes► New, S:Old ◄No/No► New, W:Add, Z:Discontinued, F:Interchangeable by set, K:Q'ty Change

Copyright (C) YANMAR CO., LTD. All RightsReserved.

Fig.45. MOUNT(VALVE)

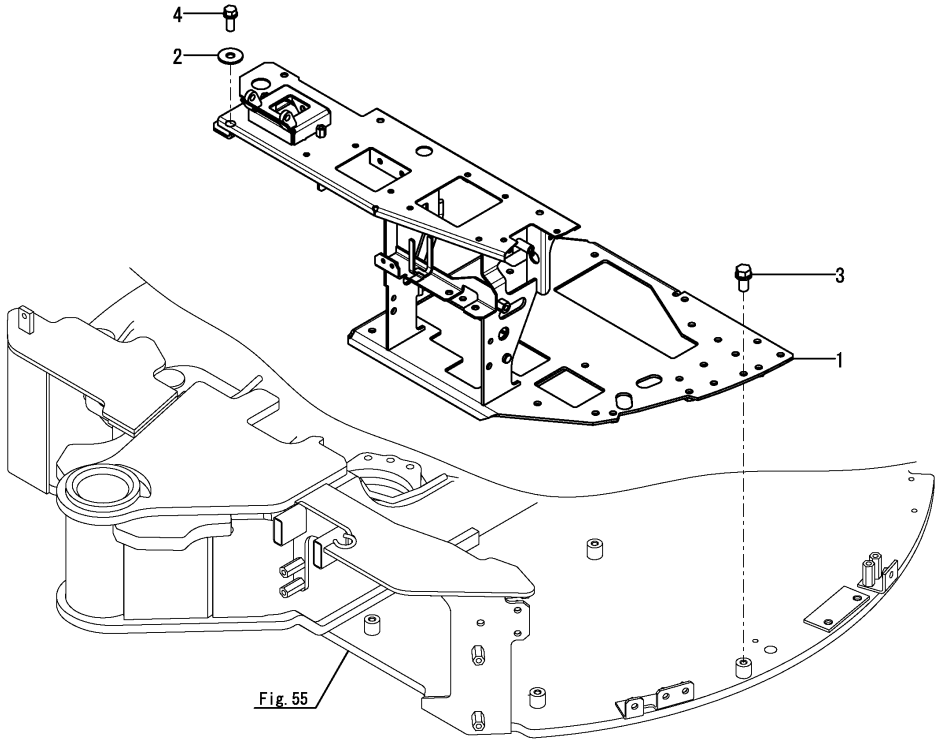

(A)=VIO35-6A P(US)
(B)=VIO35-6A C(US)
(C)=
(D)=
(E)=
(F)=

No.	Lev.	Parts No.	Description	Q'ty (A)	(B)	(C)	(D)	(E)	(F)	I	R
1	1	172B03-45600	MOUNT ASSY,LINK	1	1						
2	1	22157-100000	WASHER, 10	2	2						
3	1	26013-100202	BOLT, M10X 20	4	4						
4	1	26013-100252	BOLT, M10X 25	2	2						

N:Old $\frac{\text{Yes}}{\text{No}}$ New, Q:Old $\frac{\text{No}}{\text{Yes}}$ New, R:Old $\frac{\text{Yes}}{\text{Yes}}$ New, S:Old $\frac{\text{No}}{\text{No}}$ New, W:Add, Z:Discontinued, F:Interchangeable by set, K:Q'ty Change

Copyright (C) YANMAR CO., LTD. All RightsReserved.

Fig.46. TRAVEL LEVER(FIXED TYPE)

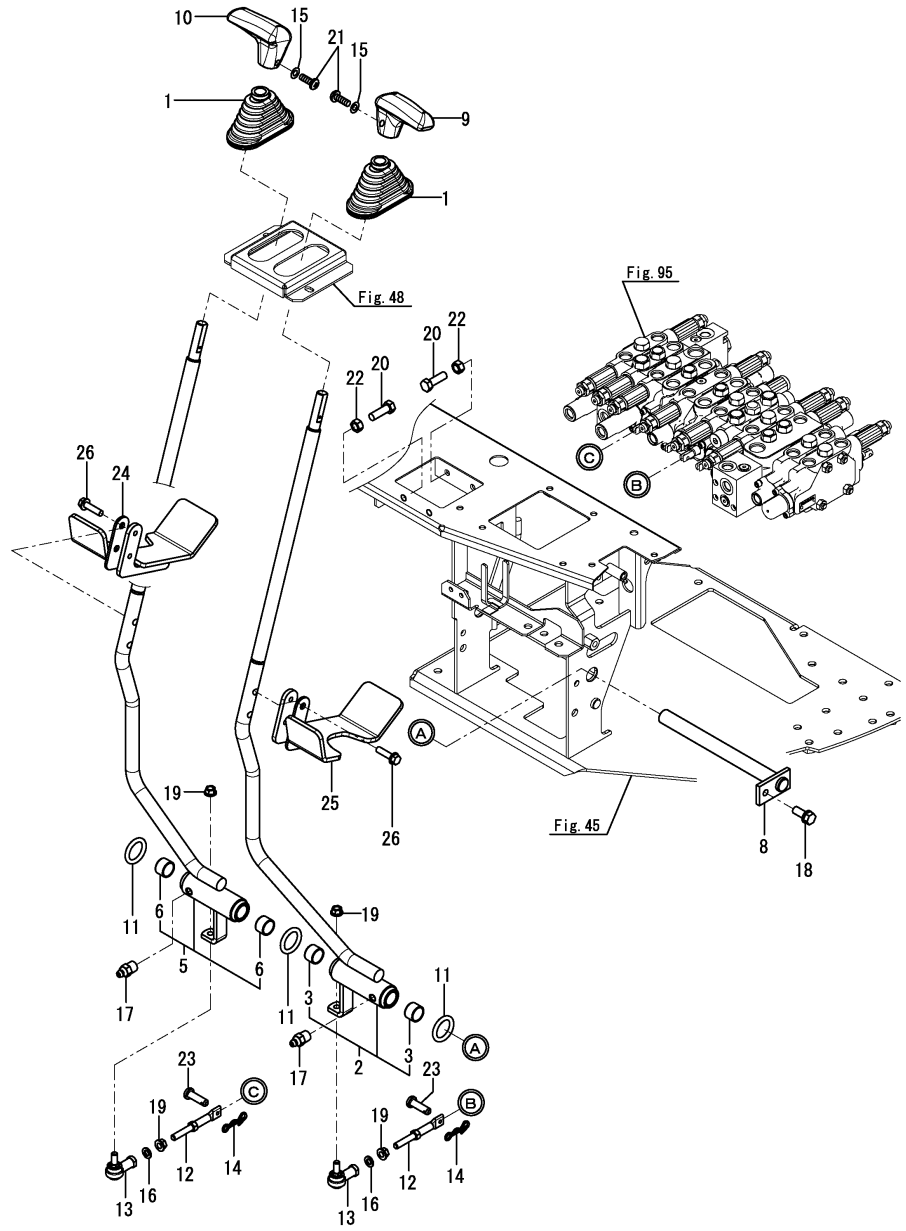

(A)=VIO35-6A P(US)
(B)=VIO35-6A C(US)
(C)=
(D)=
(E)=
(F)=

No.	Lev.	Parts No.	Description	Q'ty (A)	(B)	(C)	(D)	(E)	(F)	I	R
1	1	172141-41340	BOOT	2	2						
2	1	172B03-45100	LEVER ASSY, TRACK L	1	1						1
3	2	172141-41370	BUSH	2	2						
5	1	172B03-45150	LEVER ASSY, TRACK R	1	1						1
6	2	172141-41370	BUSH	2	2						
8	1	172B03-45400	SHAFT ASSY	1	1						
9	1	172187-45870	GRIP, DRIVE	1	1						
10	1	172187-45880	GRIP, DRIVE	1	1						
11	1	172124-46200	O-RING	3	3						
12	1	172124-46340	ROD ASSY, SPOOL	2	2						
13	1	172122-46590	ELBOW	2	2						
14	1	1C6281-52310	PIN, SNAP 6	2	2						
15	1	22117-040000	WASHER, 4	2	2						
16	1	22117-080000	WASHER, 8	2	2						
17	1	24761-020000	NIPPLE, GREASE PT1/8	2	2						
18	1	26013-080202	BOLT, SPRING M8X 20	1	1						
19	1	26051-080002	NUT, M8	4	4						
20	1	26116-080304	BOLT, M8X 30 PLATED	4	4						
21	1	26587-040122	SCREW, M4X12	2	2						
22	1	26716-080002	NUT, M8	4	4						
23	1	933110-54100	PIN	2	2						
24	1	172B03-44201	PEDAL ASSY, TRACK R	1	1						
25	1	172B03-44231	PEDAL ASSY, TRACK L	1	1						
26	1	26106-080302	BOLT, M8X 30 PLATED	4	4						

Remarks
(1)Folding type travel pedal are shown in Fig.198(46A).

N:Old $\frac{\text{Yes}}{\text{No}}$ New, Q:Old $\frac{\text{No}}{\text{Yes}}$ New, R:Old $\frac{\text{Yes}}{\text{Yes}}$ New, S:Old $\frac{\text{No}}{\text{No}}$ New, W:Add, Z:Discontinued, F:Interchangeable by set, K:Q'ty Change

Copyright (C) YANMAR CO., LTD. All RightsReserved.

Fig.198. (46A)TRAVEL PEDAL(FOLDING TYPE)

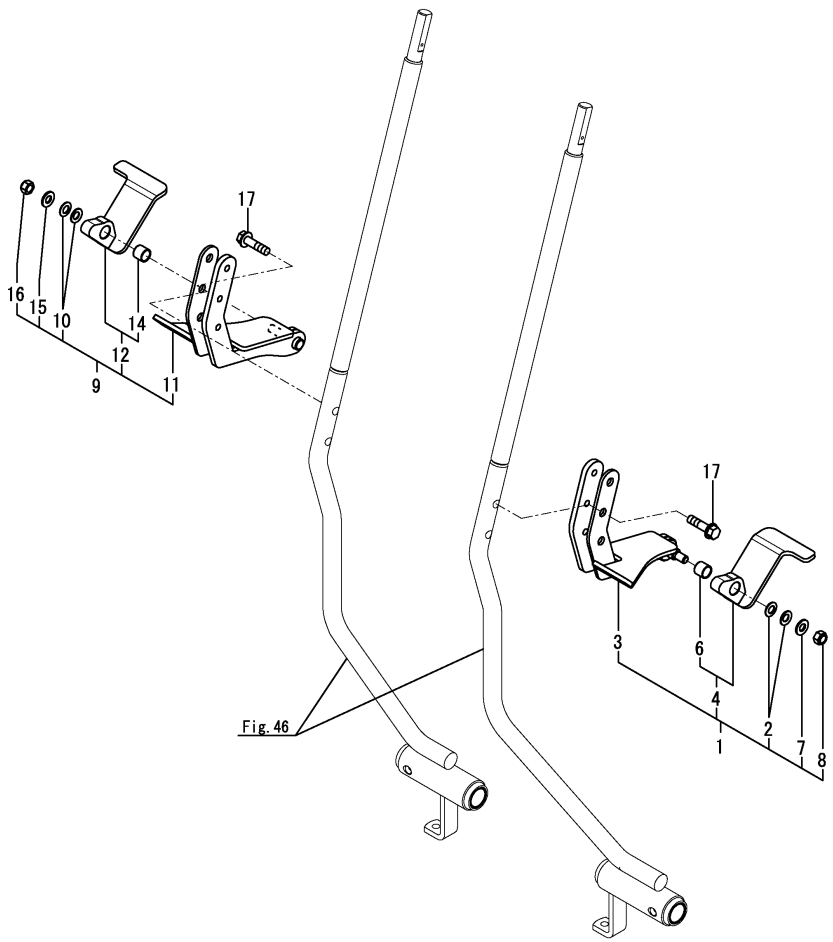

(A)=VIO35-6A P(US)
(B)=VIO35-6A C(US)
(C)=
(D)=
(E)=
(F)=

No.	Lev.	Parts No.	Description	Q'ty (A)	(B)	(C)	(D)	(E)	(F)	I	R
1	1	172B03-44600	PEDAL ASSY, TRACK L	1	1						
2	2	172068-28490	SPRING	2	2						
3	2	172B03-44610	PEDAL ASSY, TRACK FL	1	1						
4	2	172B03-44650	PEDAL ASSY, TRACK RL	1	1						
6	3	172110-45050	BUSH	1	1						
7	2	22137-080000	WASHER, 8	1	1						
8	2	26347-080002	NUT, M8	1	1						
9	1	172B03-44700	PEDAL ASSY, TRACK R	1	1						
10	2	172068-28490	SPRING	2	2						
11	2	172B03-44710	PEDAL ASSY, TRACK FR	1	1						
12	2	172B03-44750	PEDAL ASSY, TRACK RR	1	1						
14	3	172110-45050	BUSH	1	1						
15	2	22137-080000	WASHER, 8	1	1						
16	2	26347-080002	NUT, M8	1	1						
17	1	26106-080302	BOLT, M8X 30 PLATED	4	4						

Remarks
* Fixed type travel pedal are shown in Fig.46.

N:Old $\xleftarrow[\text{No}]{\text{Yes}}$ New, Q:Old $\xleftarrow[\text{Yes}]{\text{No}}$ New, R:Old $\xleftarrow[\text{Yes}]{\text{Yes}}$ New, S:Old $\xleftarrow[\text{No}]{\text{No}}$ New, W:Add, Z:Discontinued, F:Interchangeable by set, K:Q'ty Change

Copyright (C) YANMAR CO., LTD. All RightsReserved.

Fig.47. SWING PEDAL

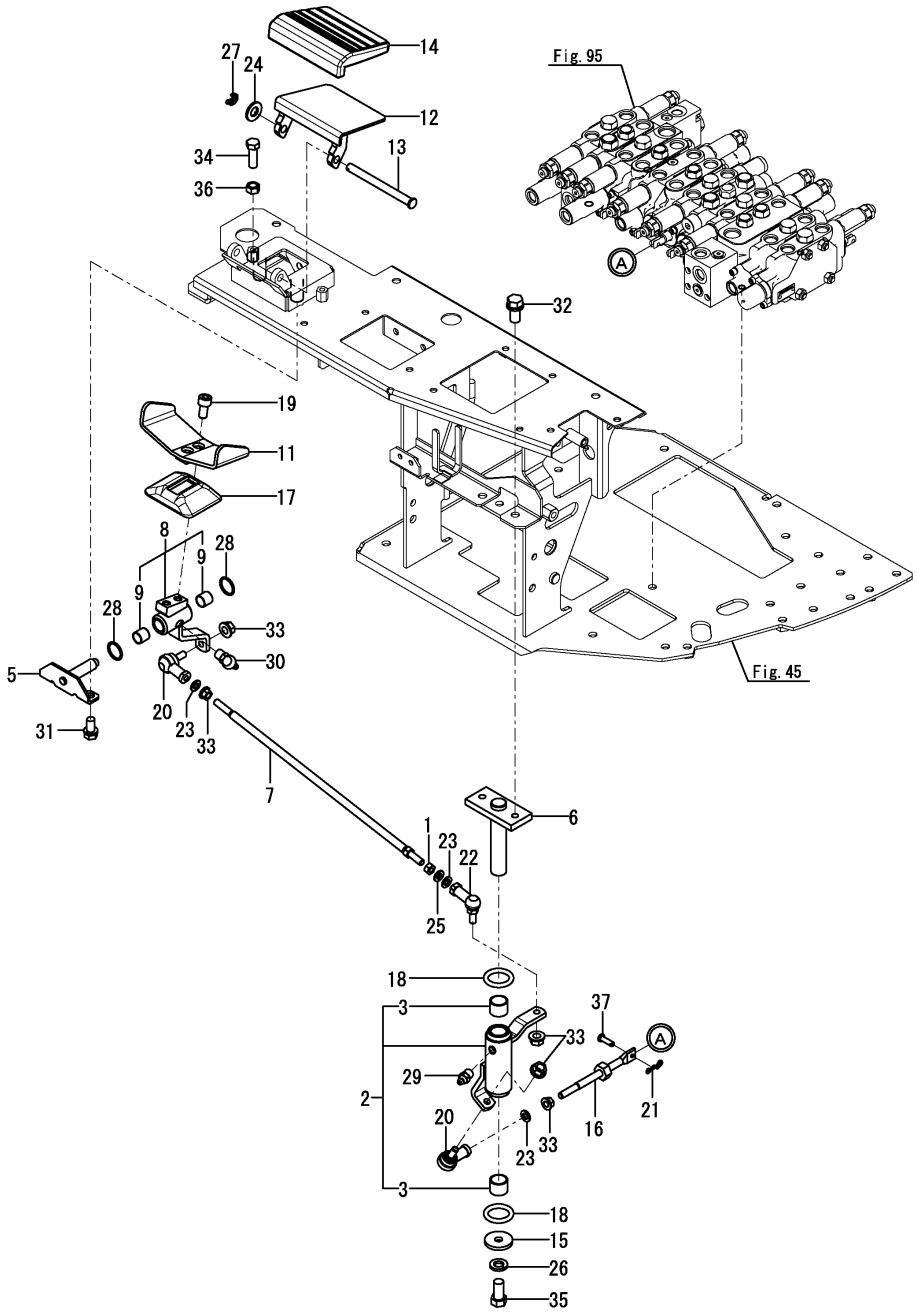

(A)=VIO35-6A P(US)
(B)=VIO35-6A C(US)
(C)=
(D)=
(E)=
(F)=

No.	Lev.	Parts No.	Description	Q'ty (A)	(B)	(C)	(D)	(E)	(F)	I	R
1	1	194200-37780	NUT, M8	1	1						
2	1	172B03-45200	LINK ASSY, SWING	1	1						
3	2	172141-41370	BUSH	2	2						
5	1	172458-45230-1	SHAFT, PEDAL	1	1						
6	1	172B03-45250	BRACKET, SWING	1	1						
7	1	172B03-45300	ROD ASSY, 420	1	1						
8	1	172B03-45320	LINK ASSY, PEDAL	1	1						
9	2	172141-41360	BUSH	2	2						
11	1	172458-45521-1	PEDAL, SWING	1	1						
12	1	172458-45540-1	COVER, PEDAL	1	1						
13	1	172187-45651	SHAFT	1	1						
14	1	172187-45760	PAD	1	1						
15	1	1A1040-45890	WASHER, 10X36X4.5	1	1						
16	1	172823-45940	ROD ASSY	1	1						
17	1	172157-45990	BOOT, PEDAL	1	1						
18	1	172124-46200	O-RING	2	2						
19	1	172165-46340	BOLT	2	2						
20	1	172122-46590	ELBOW	2	2						
21	1	1C6281-52310	PIN, SNAP 6	1	1						
22	1	1E6740-64200	BALL, LINK	1	1						
23	1	22117-080000	WASHER, 8	3	3						
24	1	22137-100000	WASHER, 10	1	1						
25	1	22217-080000	WASHER, SPRING 8	1	1						
26	1	22217-100000	WASHER, SPRING 10	1	1						
27	1	22417-250200	PIN, COTTER 2.5X20	1	1						
28	1	24311-000210	O-RING, 1AP21.0	2	2						
29	1	24761-020000	NIPPLE, GREASE PT1/8	1	1						
30	1	24761-040000	NIPPLE, GREASE B	1	1						
31	1	26013-080162	BOLT, M8X 16	2	2						
32	1	26013-100202	BOLT, M10X 20	2	2						
33	1	26051-080002	NUT, M8	5	5						
34	1	26116-080254	BOLT, M8X 25 PLATED	2	2						
35	1	26116-100202	BOLT, M10X 20 PLATED	1	1						
36	1	26716-080002	NUT, M8	2	2						
37	1	933110-54100	PIN	1	1						

N:Old $\xleftrightarrow[\text{No}]{\text{Yes}}$ New, Q:Old $\xleftrightarrow[\text{Yes}]{\text{No}}$ New, R:Old $\xleftrightarrow[\text{Yes}]{\text{Yes}}$ New, S:Old $\xleftrightarrow[\text{No}]{\text{No}}$ New, W:Add, Z:Discontinued, F:Interchangeable by set, K:Q'ty Change

Copyright (C) YANMAR CO., LTD. All RightsReserved.

Fig.48. PEDAL COVER

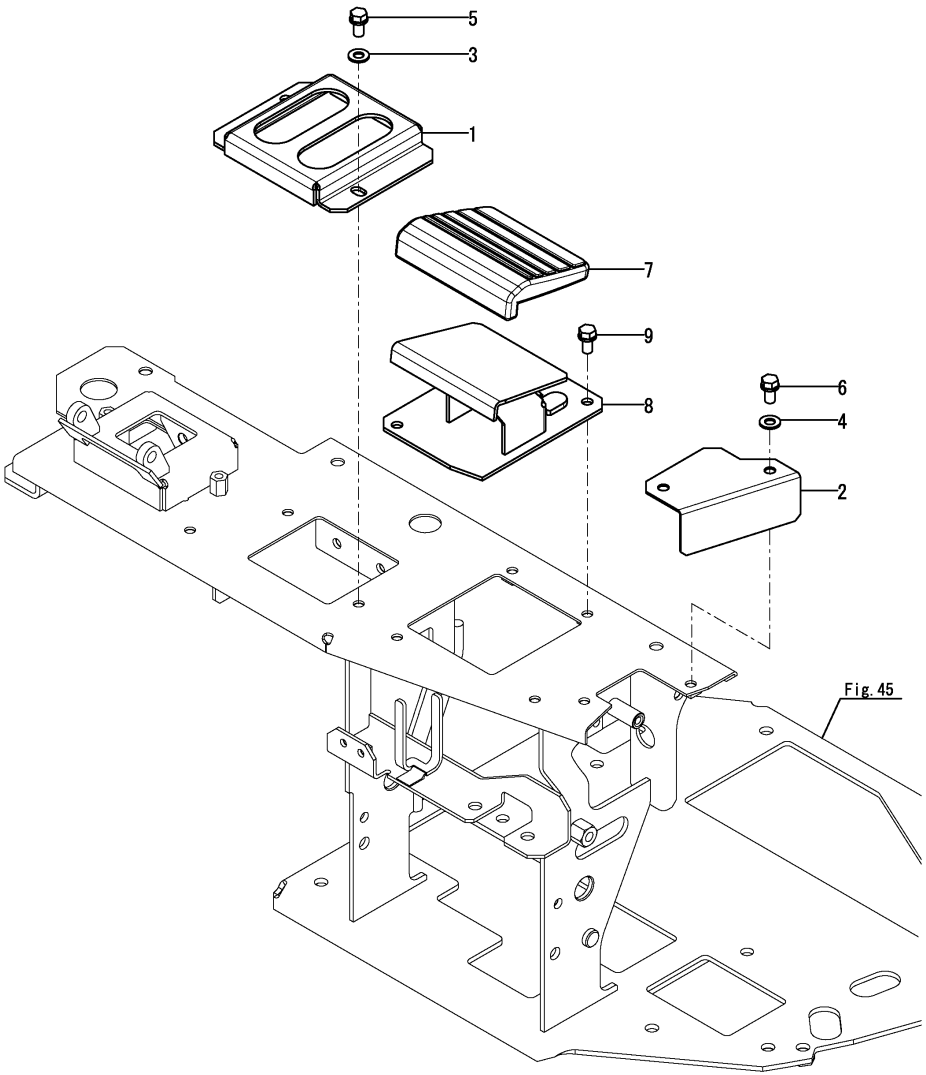

(A)=VIO35-6A P(US) (D)=
(B)=VIO35-6A C(US) (E)=
(C)= (F)=

No.	Lev.	Parts No.	Description	Q'ty (A)	(B)	(C)	(D)	(E)	(F)	I	R
1	1	172458-45510-1	BRACKET, BOOT	1	1						
2	1	172B03-45580	COVER, NO 2ND	1	1						
3	1	22137-080000	WASHER, 8	2	2						
4	1	22137-080000	WASHER, 8	2	2						
5	1	26013-080162	BOLT, M8X 16	2	2						
6	1	26013-080162	BOLT, M8X 16	2	2						
7	1	172187-45760	PAD	1	1						
8	1	172B03-46810	COVER ASSY	1	1						
9	1	26013-080162	BOLT, M8X 16	3	3						

N:Old $\xleftrightarrow[\text{No}]{\text{Yes}}$ New, Q:Old $\xleftrightarrow[\text{Yes}]{\text{No}}$ New, R:Old $\xleftrightarrow[\text{Yes}]{\text{Yes}}$ New, S:Old $\xleftrightarrow[\text{No}]{\text{No}}$ New, W:Add, Z:Discontinued, F:Interchangeable by set, K:Q'ty Change

Copyright (C) YANMAR CO., LTD. All RightsReserved.

Fig.49. BLADE LEVER

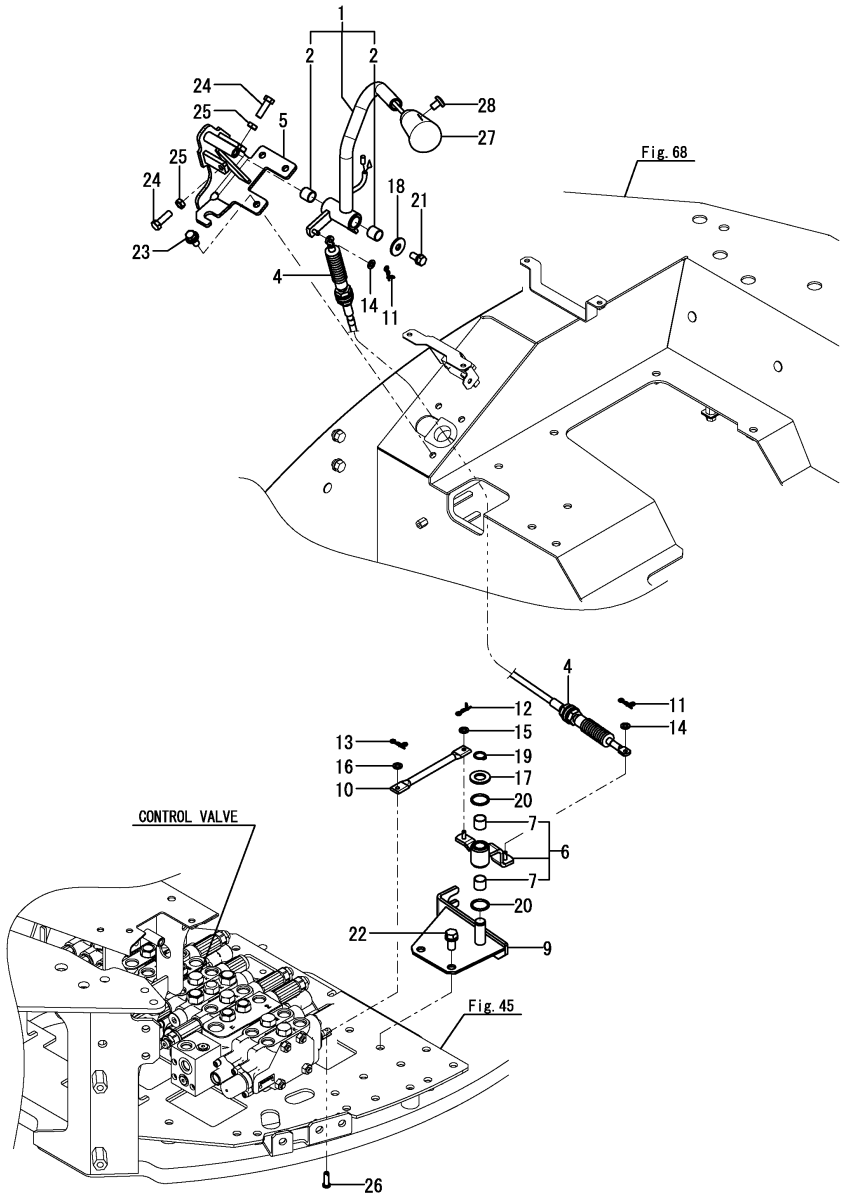

(A)=VIO35-6A P(US) (D)=
(B)=VIO35-6A C(US) (E)=
(C)= (F)=

No.	Lev.	Parts No.	Description	Q'ty (A)	(B)	(C)	(D)	(E)	(F)	I	R
1	1	172B03-45450	LEVER ASSY, BLADE EX	1	1						
2	2	172141-41360	BUSH	2	2						
4	1	172B03-45800	CABLE, BLADE	1	1						
5	1	172B03-45850	BRACKET ASSY, BLADE	1	1						
6	1	172B03-45900	BOSS ASSY, LINK	1	1						
7	2	172141-41360	BUSH	2	2						
9	1	172B03-45950	SHAFT ASSY, LINK	1	1						
10	1	172B03-45990	ROD, 130	1	1						
11	1	1C6281-52310-1	PIN, SNAP 6	2	2						
12	1	1C6281-52310-1	PIN, SNAP 6	1	1						
13	1	1C6281-52310-1	PIN, SNAP 6	1	1						
14	1	22137-050000	WASHER, 5	2	2						
15	1	22137-050000	WASHER, 5	1	1						
16	1	22137-050000	WASHER, 5	1	1						
17	1	22137-140000	WASHER, 14	1	1						
18	1	22157-080000	WASHER, 8	1	1						
19	1	22242-000140	RING, 14	1	1						
20	1	24311-000210	O-RING, 1AP21.0	2	2						
21	1	26013-080162	BOLT, M8X 16	1	1						
22	1	26013-100202	BOLT, M10X 20	2	2						
23	1	26014-080202	BOLT, M8X 20	3	3						
24	1	26116-080252	BOLT, M8X 25 PLATED	2	2						
25	1	26756-080002	NUT, LOCK M8	2	2						
26	1	933110-54100	PIN	1	1						
27	1	172B03-17500	KNOB ASSY,BLADE SW	1	1						
28	1	26587-040062	SCREW, M4X 6	1	1						

Remarks
* Not applied for angle blade specification.

N:Old ◄Yes/No► New, Q:Old ◄No/Yes► New, R:Old ◄Yes/Yes► New, S:Old ◄No/No► New, W:Add, Z:Discontinued, F:Interchangeable by set, K:Q'ty Change

Copyright (C) YANMAR CO., LTD. All RightsReserved.

Fig.159. (49A)CONTROL EQUIPMENT(BLADE LEVER)(ANGLE BLADE SPEC.)

(A)=VIO35-6A P(US)
(B)=VIO35-6A C(US)
(C)=
(D)=
(E)=
(F)=

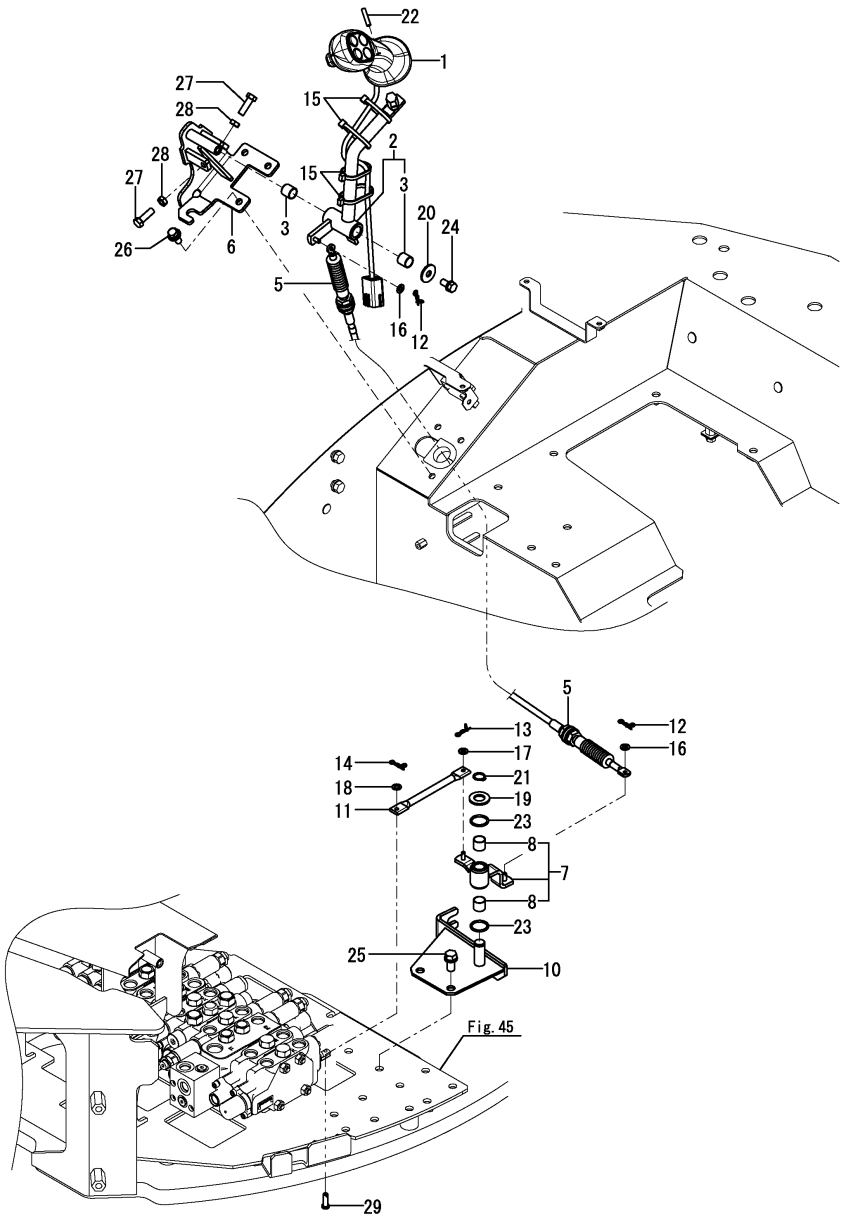

No.	Lev.	Parts No.	Description	Q'ty (A)	(B)	(C)	(D)	(E)	(F)	I	R
1	1	172B05-45350	GRIP, ANGLE BLADE	1	1						
2	1	172B05-45450	LEVER ASSY, ANGLE	1	1						
3	2	172141-41360	BUSH	2	2						
5	1	172B03-45800	CABLE, BLADE	1	1						
6	1	172B03-45850	BRACKET ASSY, BLADE	1	1						
7	1	172B03-45900	BOSS ASSY, LINK	1	1						
8	2	172141-41360	BUSH	2	2						
10	1	172B03-45950	SHAFT ASSY, LINK	1	1						
11	1	172B03-45990	ROD, 130	1	1						
12	1	1C6281-52310	PIN, SNAP 6	2	2						
13	1	1C6281-52310	PIN, SNAP 6	1	1						
14	1	1C6281-52310	PIN, SNAP 6	1	1						
15	1	194202-56460	BAND, 200	4	4						
16	1	22137-050000	WASHER, 5	2	2						
17	1	22137-050000	WASHER, 5	1	1						
18	1	22137-050000	WASHER, 5	1	1						
19	1	22137-140000	WASHER, 14	1	1						
20	1	22157-080000	WASHER, 8	1	1						
21	1	22242-000140	RING, 14	1	1						
22	1	22351-050025	PIN, SPRING 5.0X25	1	1						
23	1	24311-000210	O-RING, 1AP21.0	2	2						
24	1	26013-080162	BOLT, M8X 16	1	1						
25	1	26013-100202	BOLT, M10X 20	2	2						
26	1	26014-080202	BOLT, M8X 20	3	3						
27	1	26116-080252	BOLT, M8X 25 PLATED	2	2						
28	1	26756-080002	NUT, LOCK M8	2	2						
29	1	933110-54100	PIN	1	1						

Remarks
* Exclusive figure for angle blade specification.

N:Old $\frac{\text{Yes}}{\text{No}}$ New, Q:Old $\frac{\text{No}}{\text{Yes}}$ New, R:Old $\frac{\text{Yes}}{\text{Yes}}$ New, S:Old $\frac{\text{No}}{\text{No}}$ New, W:Add, Z:Discontinued, F:Interchangeable by set, K:Q'ty Change

Copyright (C) YANMAR CO., LTD. All RightsReserved.

Fig.50. ARMREST

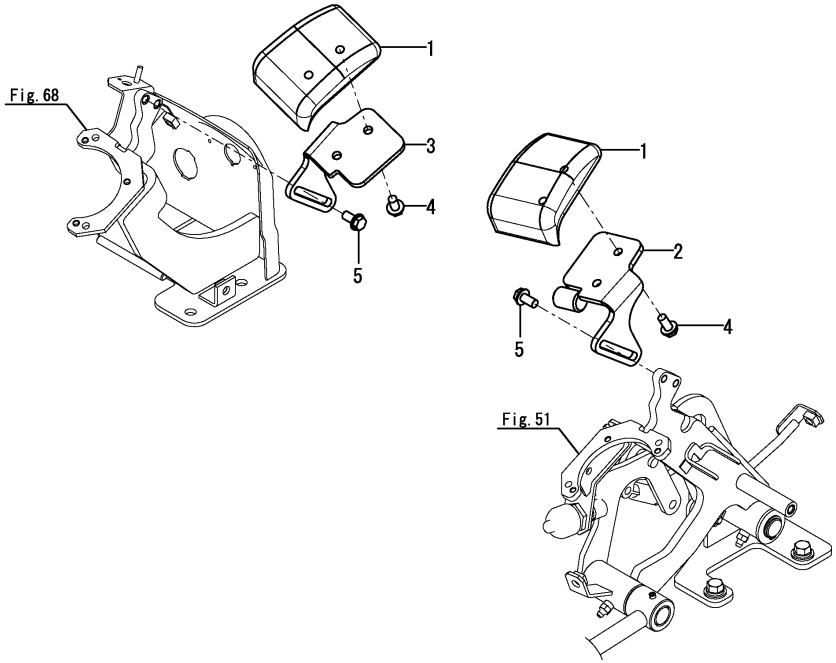

(A)=VIO35-6A P(US)
(B)=VIO35-6A C(US)
(C)=
(D)=
(E)=
(F)=

No.	Lev.	Parts No.	Description	Q'ty (A)	(B)	(C)	(D)	(E)	(F)	I	R
1	1	172441-44320	ARMREST	2	2						
2	1	172A46-46500	GUIDE ASSY	1	1						
3	1	172A46-46530	PLATE, GUIDE	1	1						
4	1	172519-63240	BOLT	4	4						
5	1	172519-63240	BOLT	4	4						

N:Old $\xleftrightarrow[\text{No}]{\text{Yes}}$ New, Q:Old $\xleftrightarrow[\text{Yes}]{\text{No}}$ New, R:Old $\xleftrightarrow[\text{Yes}]{\text{Yes}}$ New, S:Old $\xleftrightarrow[\text{No}]{\text{No}}$ New, W:Add, Z:Discontinued, F:Interchangeable by set, K:Q'ty Change

Copyright (C) YANMAR CO., LTD. All RightsReserved.

Fig.51. LOCK LEVER & STAND

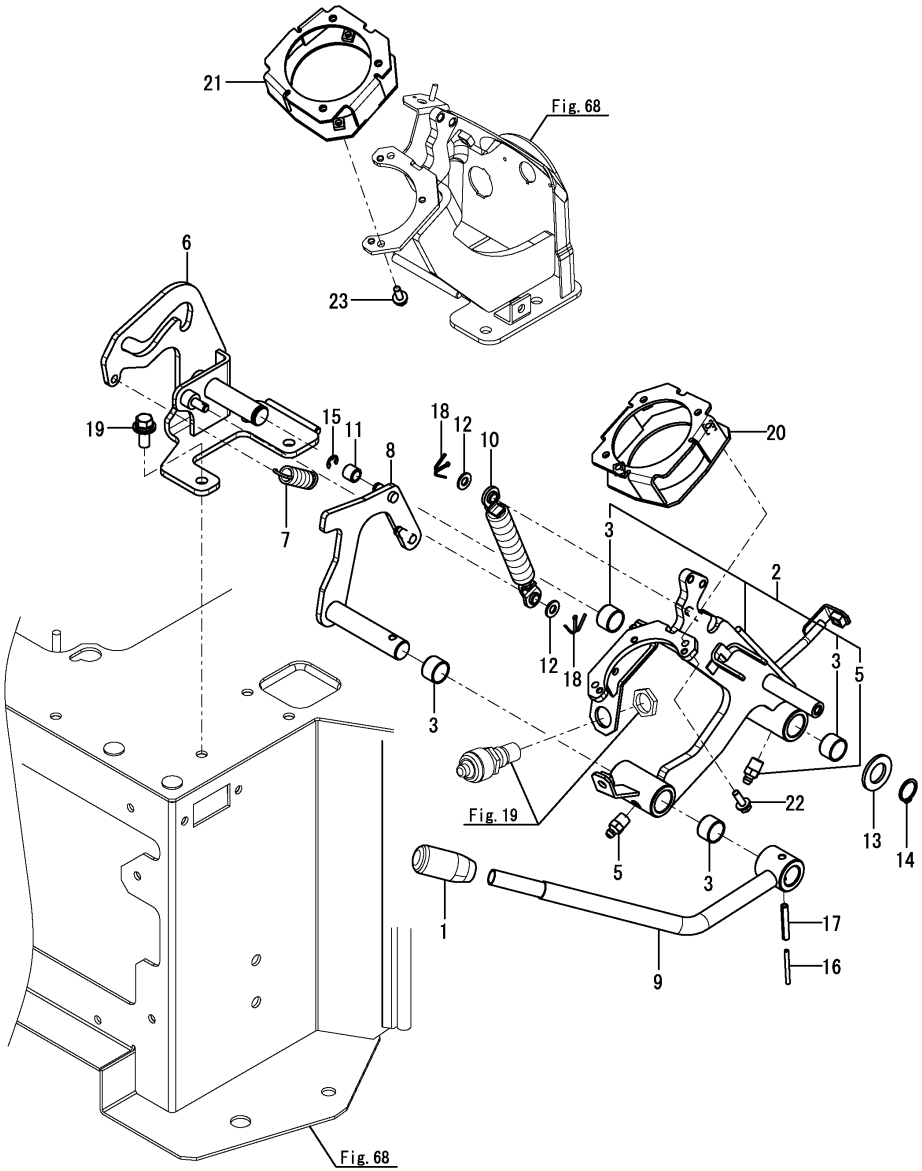

(A)=VIO35-6A P(US) (D)=
(B)=VIO35-6A C(US) (E)=
(C)= (F)=

No.	Lev.	Parts No.	Description	Q'ty (A)	(B)	(C)	(D)	(E)	(F)	I	R
1	1	172A77-46050	GRIP	1	1						
2	1	172B03-46100	STAND ASSY, LEVER	1	1						
3	2	172141-41370	BUSH	4	4						
5	2	24761-020000	NIPPLE, GREASE PT1/8	2	2						
6	1	172B03-46200	BASE ASSY, LEVER L	1	1						
7	1	172A69-46270	SPRING	1	1						
8	1	172B03-46310	ROD ASSY, GUIDE	1	1						
9	1	172B03-46350	LEVER ASSY, LOCK L	1	1						
10	1	172455-46890	SPRING, GAS	1	1						
11	1	172165-47550	BUSH	1	1						
12	1	22137-080000	WASHER, 8	2	2						
13	1	22137-200000	WASHER, 20	1	1						
14	1	22242-000200	RING, 20	1	1						
15	1	22272-000070	RING, E- 7	1	1						
16	1	22351-035040	PIN, SPRING 3.5X40	1	1						
17	1	22351-060040	PIN, SPRING 6.0X40	1	1						
18	1	22417-200200	PIN, COTTER 2.0X20	2	2						
19	1	26014-100252	BOLT, M10X 25	3	3						
20	1	172B03-46010	SPACER ASSY, L	1	1						
21	1	172B03-46060	SPACER ASSY, R	1	1						
22	1	26014-060202	BOLT, M6X 20	2	2						
23	1	26014-060202	BOLT, M6X 20	2	2						

N:Old $\overset{\text{Yes}}{\underset{\text{No}}{\leftrightarrows}}$ New, Q:Old $\overset{\text{No}}{\underset{\text{Yes}}{\leftrightarrows}}$ New, R:Old $\overset{\text{Yes}}{\underset{\text{Yes}}{\leftrightarrows}}$ New, S:Old $\overset{\text{No}}{\underset{\text{No}}{\leftrightarrows}}$ New, W:Add, Z:Discontinued, F:Interchangeable by set, K:Q'ty Change

Copyright (C) YANMAR CO., LTD. All RightsReserved.

Fig.52. TRAVEL FRAME

(A)=VIO35-6A P(US) (D)=
(B)=VIO35-6A C(US) (E)=
(C)= (F)=

No.	Lev.	Parts No.	Description	Q'ty (A)	(B)	(C)	(D)	(E)	(F)	I	R
1	1	172458-50480-2	COVER, FRAME	2	2						
2	1	172B03-50600	FRAME ASSY,LOWER1740	1	1						
3	1	26106-100122	BOLT, M10X 12 PLATED	4	4						
4	1	172141-50890	GROMMET	1	1						1

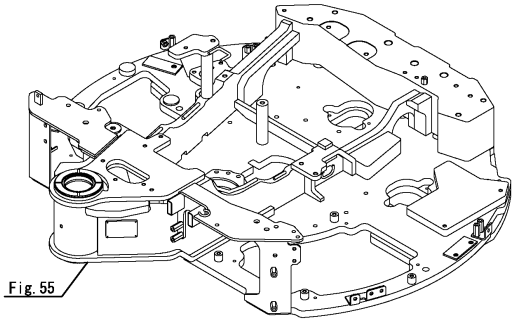

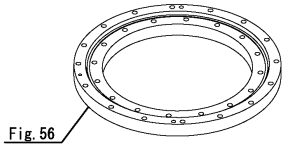

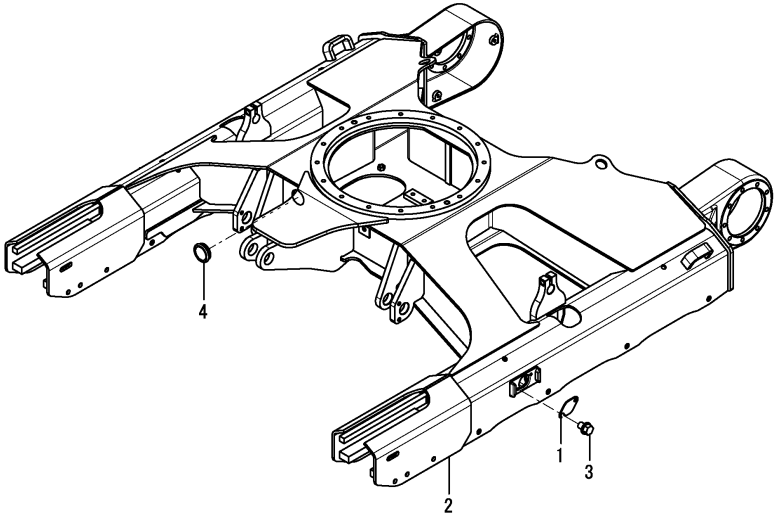

Remarks
(1)Not applied for angle blade specification.

N:Old $\xleftarrow[\text{No}]{\text{Yes}}$ New, Q:Old $\xleftarrow[\text{Yes}]{\text{No}}$ New, R:Old $\xleftarrow[\text{Yes}]{\text{Yes}}$ New, S:Old $\xleftarrow[\text{No}]{\text{No}}$ New, W:Add, Z:Discontinued, F:Interchangeable by set, K:Q'ty Change

Copyright (C) YANMAR CO., LTD. All RightsReserved.

Fig.53. CRAWLER GUARD

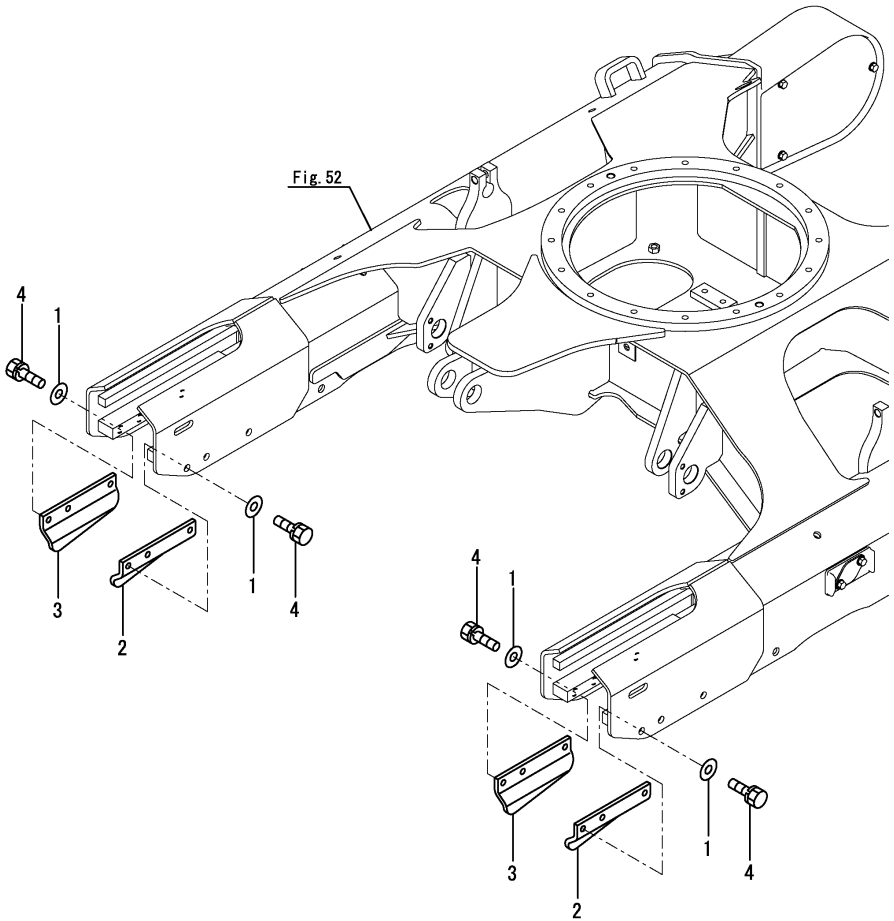

(A)=VIO35-6A P(US)
(B)=VIO35-6A C(US)
(C)=
(D)=
(E)=
(F)=

No.	Lev.	Parts No.	Description	Q'ty (A)	(B)	(C)	(D)	(E)	(F)	I	R
1	1	172730-05250	WASHER	12	12						
2	1	172458-50800-2	PLATE, GUARD	2	2						
3	1	172458-50810-2	PLATE, GUARD	2	2						
4	1	26013-120252	BOLT, M12X 25	12	12						

N:Old ◄Yes/No► New, Q:Old ◄No/Yes► New, R:Old ◄Yes/Yes► New, S:Old ◄No/No► New, W:Add, Z:Discontinued, F:Interchangeable by set, K:Q'ty Change

Copyright (C) YANMAR CO., LTD. All RightsReserved.

Fig.54. COUNTER WEIGHT

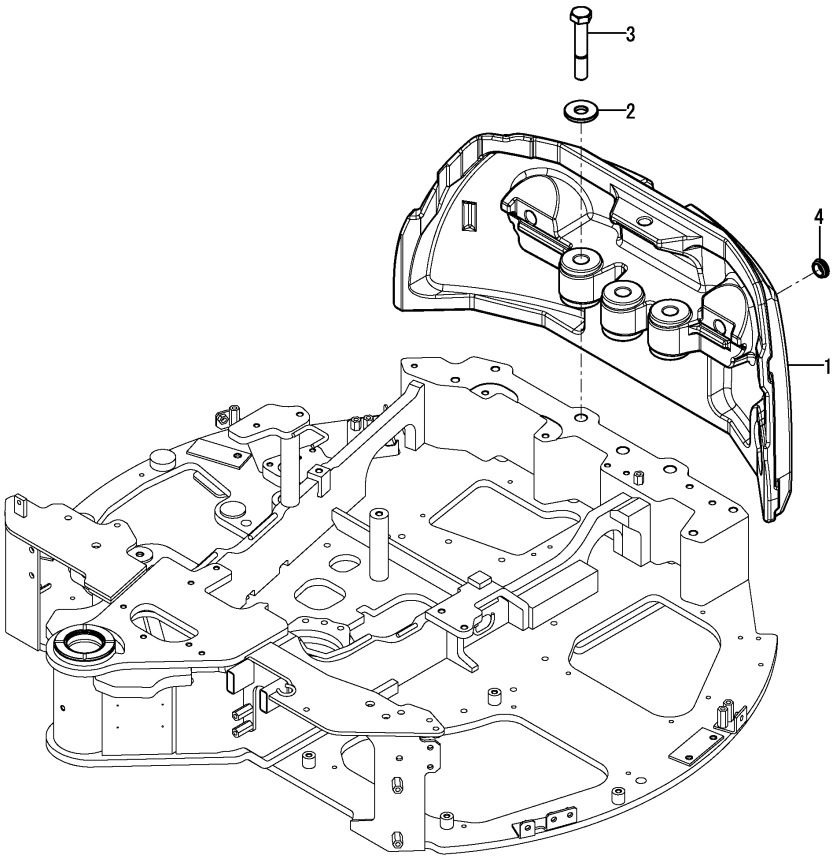

(A)=VIO35-6A P(US)
(B)=VIO35-6A C(US)
(C)=
(D)=
(E)=
(F)=

No.	Lev.	Parts No.	Description	Q'ty (A)	(B)	(C)	(D)	(E)	(F)	I	R
1	1	172B02-53310	WEIGHT, COUNTER	1	1						
2	1	172187-53321	WASHER	3	3						
3	1	172455-53331	BOLT	3	3						
4	1	172456-53700	GROMMET	2	2						

N:Old ◄Yes/No► New, Q:Old ◄No/Yes► New, R:Old ◄Yes/Yes► New, S:Old ◄No/No► New, W:Add, Z:Discontinued, F:Interchangeable by set, K:Q'ty Change

Copyright (C) YANMAR CO., LTD. All RightsReserved.

Fig.55. TURNING FRAME

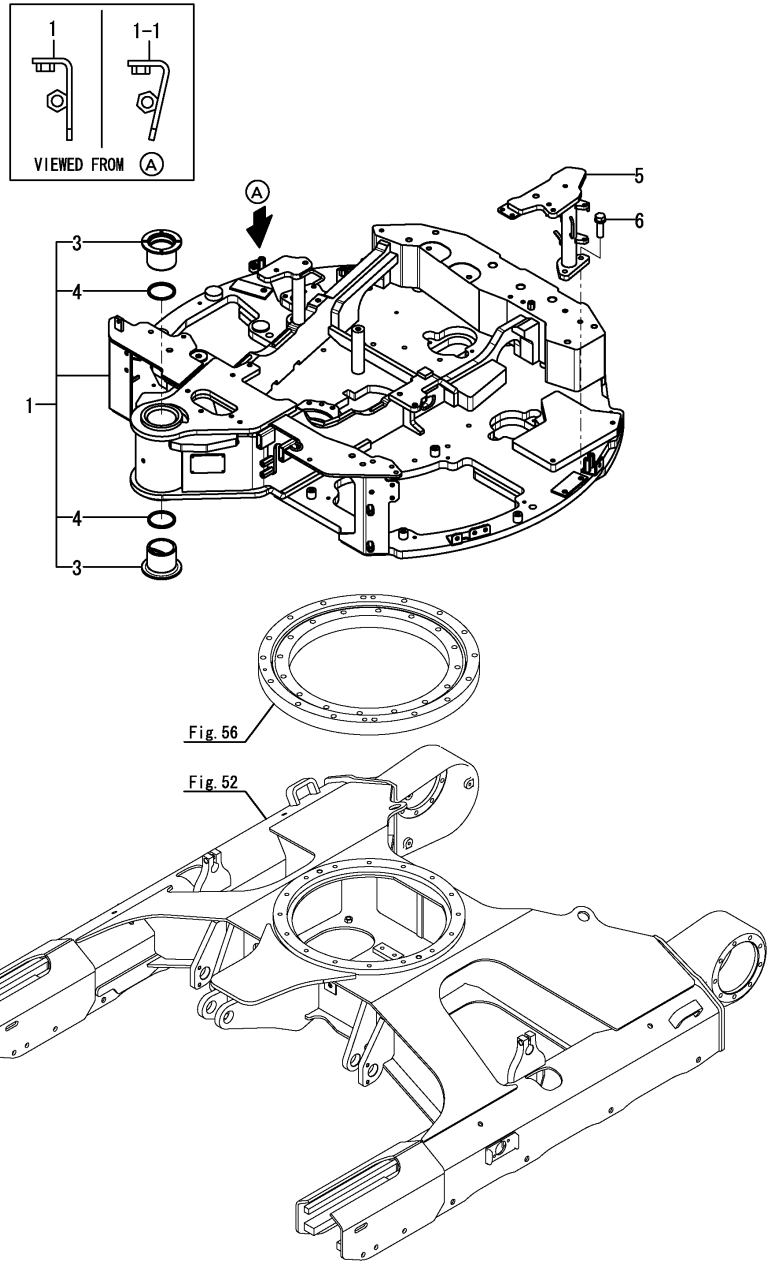

(A)=VIO35-6A P(US) (D)=
(B)=VIO35-6A C(US) (E)=
(C)= (F)=

No.	Lev.	Parts No.	Description	Q'ty (A)	(B)	(C)	(D)	(E)	(F)	I	R
1	1	172B03-54090	FRAME ASSY, TURNING	1	1						
1-1	1	172B03-54091	FRAME ASSY, TURNING	1	1					S	
	(A=MZZZZZ)	(B=MZZZZZ)									
3	2	172B03-54710	BUSH, 90X85	2	2						
4	2	172455-81380	SEAL, DUST 90X105X6	2	2						
5	1	172B03-54800	MOUNT ASSY, FRAME	1	1						
6	1	26013-120402	BOLT, M12X 40	2	2						

N:Old $\xleftarrow[\text{No}]{\text{Yes}}$ New, Q:Old $\xleftarrow[\text{Yes}]{\text{No}}$ New, R:Old $\xleftarrow[\text{Yes}]{\text{Yes}}$ New, S:Old $\xleftarrow[\text{No}]{\text{No}}$ New, W:Add, Z:Discontinued, F:Interchangeable by set, K:Q'ty Change

Copyright (C) YANMAR CO., LTD. All RightsReserved.

Fig.56. TURNING BEARING

(A)=VIO35-6A P(US)
(B)=VIO35-6A C(US)
(C)=
(D)=
(E)=
(F)=

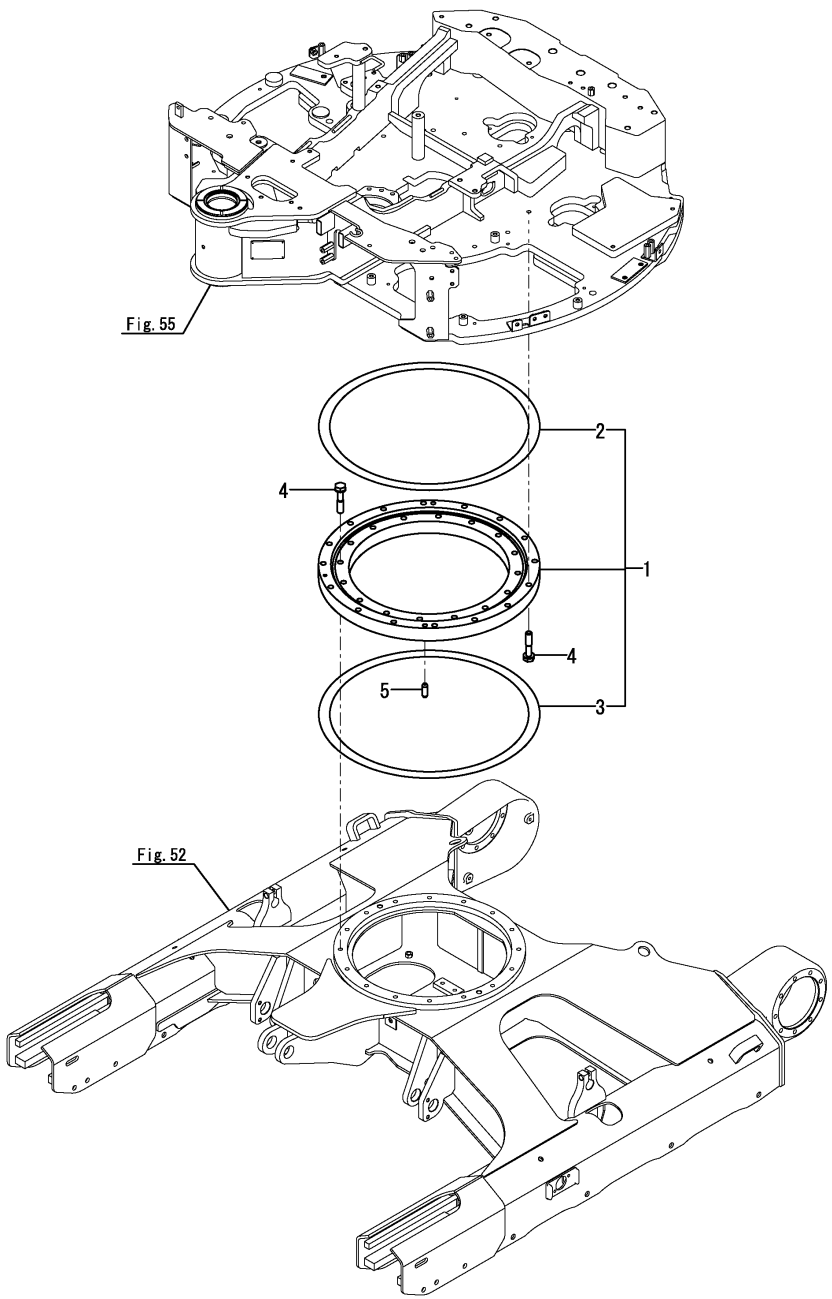

No.	Lev.	Parts No.	Description	Q'ty (A)	(B)	(C)	(D)	(E)	(F)	I	R
1	1	172458-57600-2	BEARING, TURNING	1	1						
2	2	172122-57630	SEAL, SWING	1	1						
3	2	172122-57640	SEAL, SWING	1	1						
4	1	172A46-57610	BOLT	32	32						
5	1	172122-57620	PIN, PARALLEL	4	4						

N:Old $\frac{\text{Yes}}{\text{No}}$ New, Q:Old $\frac{\text{No}}{\text{Yes}}$ New, R:Old $\frac{\text{Yes}}{\text{Yes}}$ New, S:Old $\frac{\text{No}}{\text{No}}$ New, W:Add, Z:Discontinued, F:Interchangeable by set, K:Q'ty Change

Copyright (C) YANMAR CO., LTD. All RightsReserved.

Fig.57. COVER(MULTI)

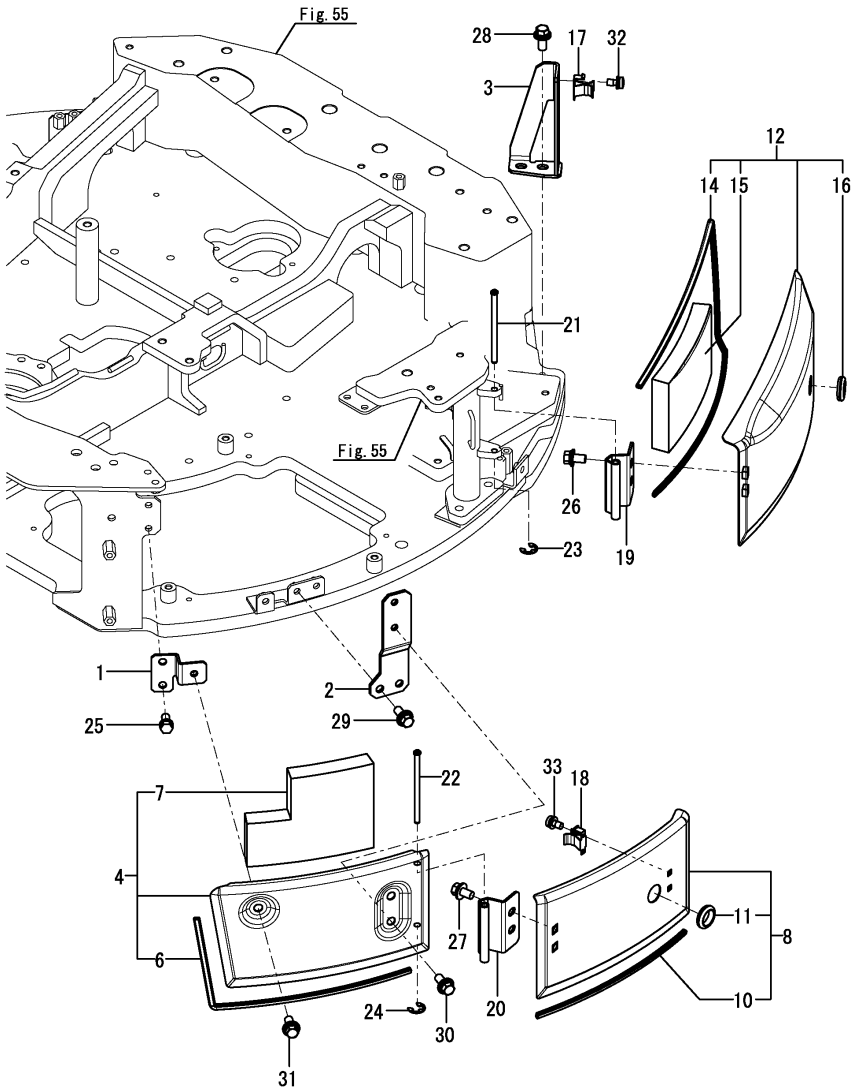

(A)=VIO35-6A P(US)
(B)=VIO35-6A C(US)
(C)=
(D)=
(E)=
(F)=

No.	Lev.	Parts No.	Description	Q'ty (A)	(B)	(C)	(D)	(E)	(F)	I	R
1	1	172B03-61050	STAY ASSY, MULTI	1	1						
2	1	172B03-61070	STAY ASSY, MULTI	1	1						
3	1	172B03-61090	STAY, HOLDER	1	1						
4	1	172B03-61200	COVER ASSY, MULTI	1	1						
6	2	172B03-61450	SEAL, MULTI	1	1						
7	2	172B03-61480	SPONGE	1	1						
8	1	172B03-61230	COVER ASSY, MULTI	1	1						
10	2	172B03-61460	SEAL, MULTI	1	1						
11	2	172137-66230	GROMMET	1	1						
12	1	172B03-61260	COVER ASSY, MULTI	1	1						
14	2	172B03-61470	SEAL, MULTI	1	1						
15	2	172B03-61490	SPONGE	1	1						
16	2	172137-66230	GROMMET	1	1						
17	1	198220-61480	HOLDER, ROD	1	1						
18	1	198220-61480	HOLDER, ROD	1	1						
19	1	172B03-61540	HINGE ASSY,MULTI	1	1						
20	1	172B03-61540	HINGE ASSY,MULTI	1	1						
21	1	172448-65490	SHAFT, HINGE	1	1						
22	1	172448-65490	SHAFT, HINGE	1	1						
23	1	22272-000070	RING, E- 7	1	1						
24	1	22272-000070	RING, E- 7	1	1						
25	1	26013-100202	BOLT, M10X 20	2	2						
26	1	26014-100202	BOLT, M10X 20	2	2						
27	1	26014-100202	BOLT, M10X 20	2	2						
28	1	26014-100252	BOLT, M10X 25	2	2						
29	1	26014-100252	BOLT, M10X 25	2	2						
30	1	26014-100252	BOLT, M10X 25	2	2						
31	1	26014-100252	BOLT, M10X 25	1	1						
32	1	26023-050102	SCREW, M5X10	2	2						
33	1	26023-050102	SCREW, M5X10	2	2						

N:Old $\frac{\text{Yes}}{\text{No}}$ New, Q:Old $\frac{\text{No}}{\text{Yes}}$ New, R:Old $\frac{\text{Yes}}{\text{Yes}}$ New, S:Old $\frac{\text{No}}{\text{No}}$ New, W:Add, Z:Discontinued, F:Interchangeable by set, K:Q'ty Change

Copyright (C) YANMAR CO., LTD. All RightsReserved.

Fig.58. UPPER COVER

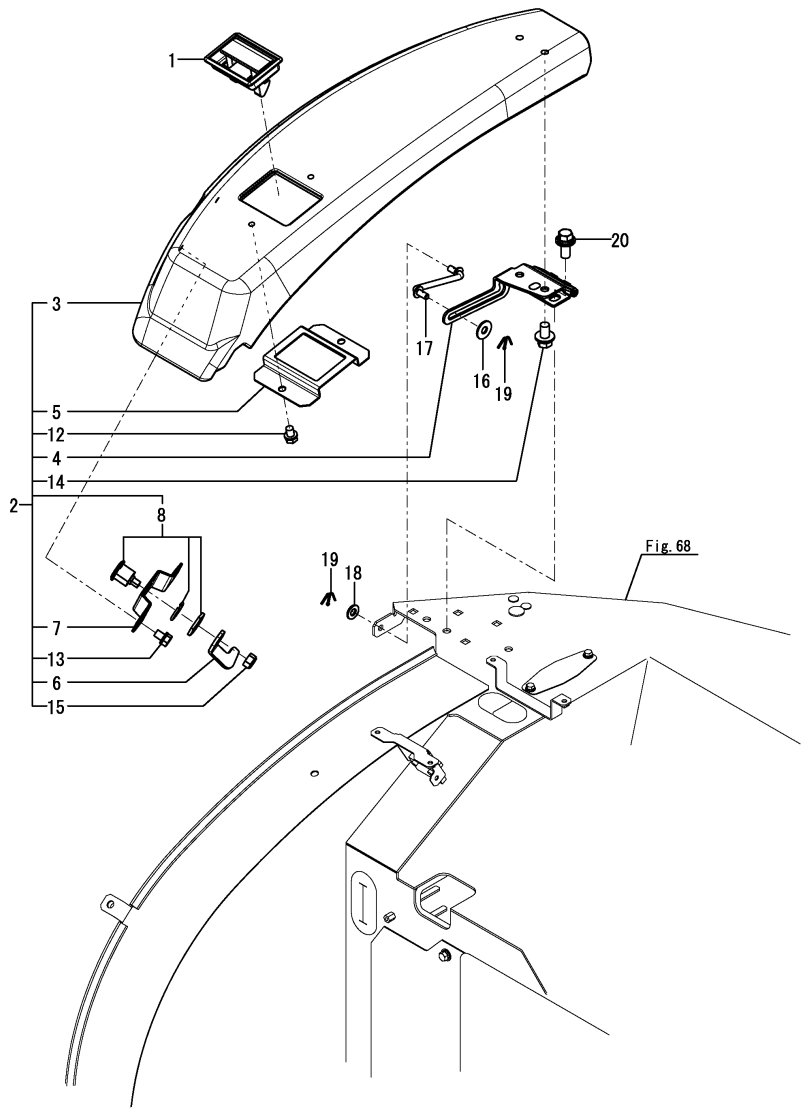

(A)=VIO35-6A P(US) (D)=
(B)=VIO35-6A C(US) (E)=
(C)= (F)=

No.	Lev.	Parts No.	Description	Q'ty (A)	(B)	(C)	(D)	(E)	(F)	I	R
1	1	172187-61421	HANDLE, LOCK	1	1						1
1-1	1	172B02-69040	HANDLE,LOCK BLACK	1	1					S	2
	(A=MAF001)	(B=MAF001)									
2	1	172B03-61810	COVER ASSY	1	1						
3	2	172B03-61820	COVER	1	1						
4	2	172B03-61830	HINGE ASSY,COVER B	1	1						
5	2	172A46-61940	STAY, CATCH	1	1						
6	2	172B03-61950	STAY, KEY	1	1						
7	2	172B03-61960	LOCK,PLATE	1	1						
8	2	172B03-66170	CYLINDER ASSY, KEY	1	1						
12	2	26013-080122	BOLT, SPRING M8X 12	2	2						
13	2	26013-080122	BOLT, SPRING M8X 12	2	2						
14	2	26014-100202	BOLT, M10X 20	2	2						
15	2	26347-100002	NUT, M10	1	1						
16	1	1A1380-62160	WASHER, BELT COVER	1	1						
17	1	172444-65190	ROD ASSY, STOPPER	1	1						
18	1	22137-080000	WASHER, 8	1	1						
19	1	22417-200200	PIN, COTTER 2.0X20	2	2						
20	1	26014-100252	BOLT, M10X 25	2	2						

Remarks
(1)Color = DARK OLIVE GRAY.
(2)Color = BLACK.

N:Old $\overset{\text{Yes}}{\underset{\text{No}}{\leftrightarrow}}$ New, Q:Old $\overset{\text{No}}{\underset{\text{Yes}}{\leftrightarrow}}$ New, R:Old $\overset{\text{Yes}}{\underset{\text{Yes}}{\leftrightarrow}}$ New, S:Old $\overset{\text{No}}{\underset{\text{No}}{\leftrightarrow}}$ New, W:Add, Z:Discontinued, F:Interchangeable by set, K:Q'ty Change

Copyright (C) YANMAR CO., LTD. All RightsReserved.

Fig.59. COVER(TURNING FRAME)

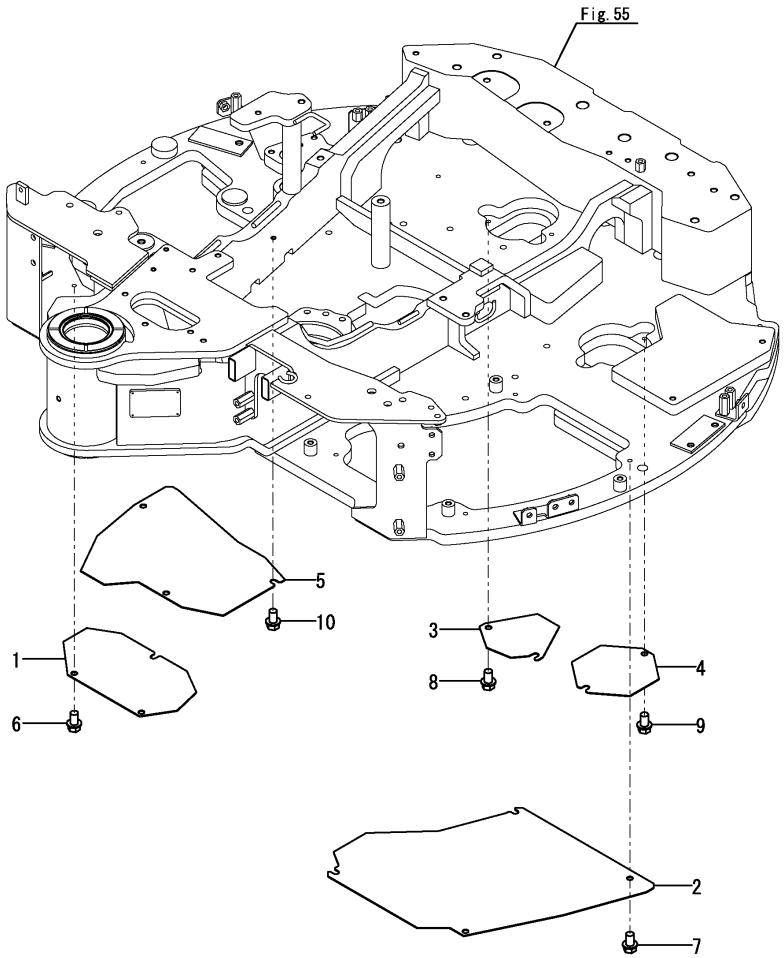

(A)=VIO35-6A P(US)
(B)=VIO35-6A C(US)
(C)=
(D)=
(E)=
(F)=

No.	Lev.	Parts No.	Description	Q'ty (A)	(B)	(C)	(D)	(E)	(F)	I	R
1	1	172B03-61400	COVER, FUEL	1	1						
2	1	172B03-61410	COVER, VALVE STAND	1	1						
3	1	172B03-61420	COVER, OIL SUMP	1	1						
4	1	172B03-61430	COVER, PUMP	1	1						
5	1	172B03-61440	COVER, RESERVOIR	1	1						
6	1	26106-100162	BOLT, M10X 16 PLATED	3	3						
7	1	26106-100162	BOLT, M10X 16 PLATED	4	4						
8	1	26106-100162	BOLT, M10X 16 PLATED	2	2						
9	1	26106-100162	BOLT, M10X 16 PLATED	2	2						
10	1	26106-100162	BOLT, M10X 16 PLATED	3	3						

N:Old $\frac{\text{Yes}}{\text{No}}$ New, Q:Old $\frac{\text{No}}{\text{Yes}}$ New, R:Old $\frac{\text{Yes}}{\text{Yes}}$ New, S:Old $\frac{\text{No}}{\text{No}}$ New, W:Add, Z:Discontinued, F:Interchangeable by set, K:Q'ty Change

Copyright (C) YANMAR CO., LTD. All RightsReserved.

Fig.60. COVER(TRAVEL FRAME)

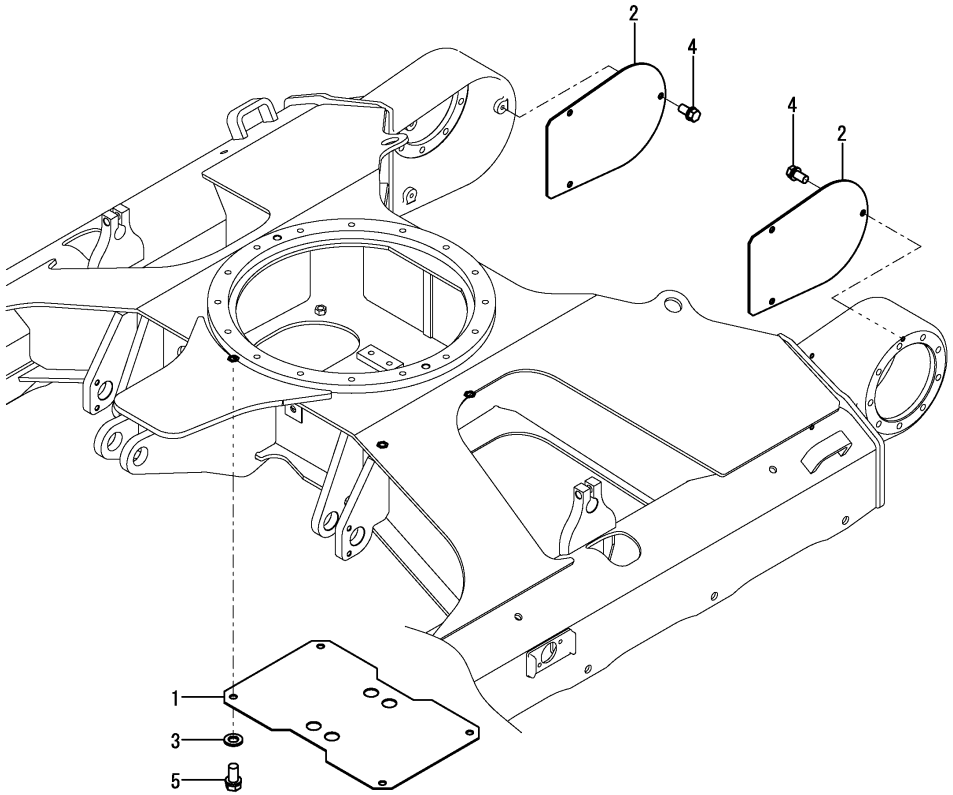

(A)=VIO35-6A P(US)
(B)=VIO35-6A C(US)
(C)=
(D)=
(E)=
(F)=

No.	Lev.	Parts No.	Description	Q'ty (A)	(B)	(C)	(D)	(E)	(F)	I	R
1	1	172B03-50760	COVER	1	1						
2	1	172A46-61460	COVER, TRAVEL	2	2						
3	1	22137-120000	WASHER, 12	4	4						
4	1	26013-100202	BOLT, M10X 20	6	6						
5	1	26013-120252	BOLT, M12X 25	4	4						

N:Old $\xleftarrow[\text{No}]{\text{Yes}}$ New, Q:Old $\xleftarrow[\text{Yes}]{\text{No}}$ New, R:Old $\xleftarrow[\text{Yes}]{\text{Yes}}$ New, S:Old $\xleftarrow[\text{No}]{\text{No}}$ New, W:Add, Z:Discontinued, F:Interchangeable by set, K:Q'ty Change

Copyright (C) YANMAR CO., LTD. All RightsReserved.

Fig.61. GUARD(FRAME)

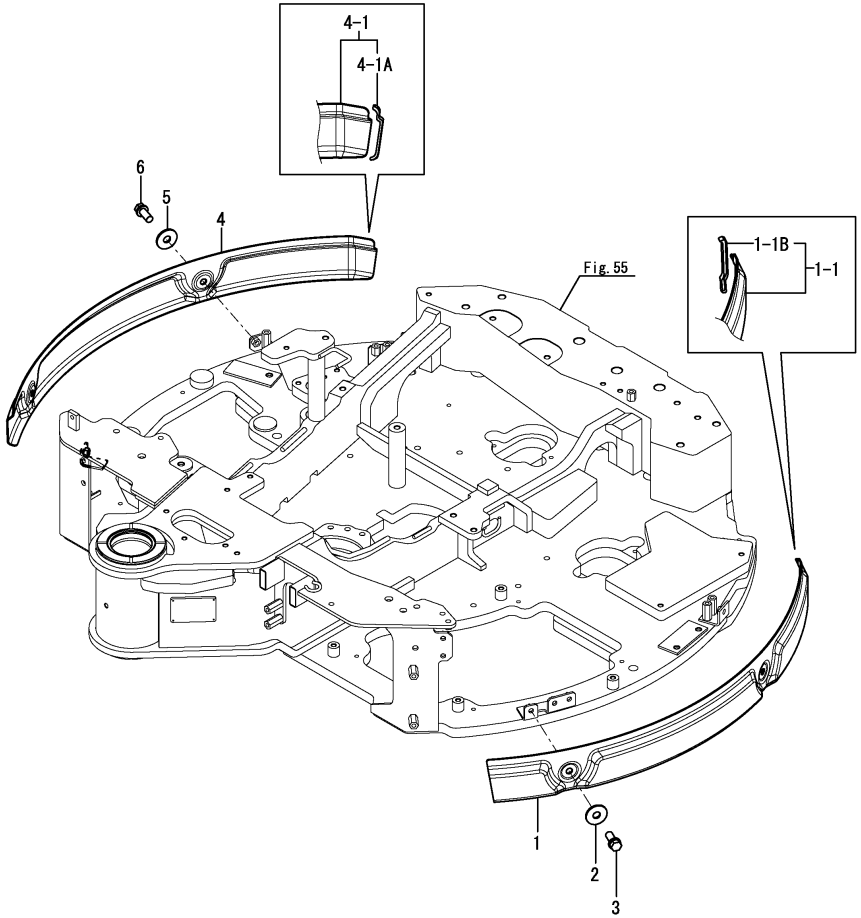

(A)=VIO35-6A P(US) (D)=
(B)=VIO35-6A C(US) (E)=
(C)= (F)=

No.	Lev.	Parts No.	Description	Q'ty (A)	(B)	(C)	(D)	(E)	(F)	I	R
1	1	172B03-61020	GUARD, FRAME	1	1						1
1-1	1	172B03-61010	GUARD ASSY, FRAME L	1	1					N	1
	(A=M60711)	(B=M60711)									
1-1B	2	172434-61170	TRIM	1	1					W	
	(A=M60711)	(B=M60711)									
1A	1	172437-03352	LABEL, CYLINDER	1	1						3
2	1	22157-100000	WASHER, 10	2	2						
3	1	26013-100252	BOLT, M10X 25	2	2						
4	1	172B03-61120	GUARD, FRAME	1	1						2
4-1	1	172B03-61110	GUARD ASSY, FRAME R	1	1					N	2
	(A=M60711)	(B=M60711)									
4-1A	2	172444-17620	SEAL	1	1					W	
	(A=M60711)	(B=M60711)									
4A	1	172437-03352	LABEL, CYLINDER	1	1						3
5	1	22157-100000	WASHER, 10	2	2						
6	1	26013-100252	BOLT, M10X 25	2	2						

Remarks
(1)Attach the No.1A label to this part.
(2)Attach the No.4A label to this part.
(3)Label is not illustrated.

N:Old $\frac{\text{Yes}}{\text{No}}$ New, Q:Old $\frac{\text{No}}{\text{Yes}}$ New, R:Old $\frac{\text{Yes}}{\text{Yes}}$ New, S:Old $\frac{\text{No}}{\text{No}}$ New, W:Add, Z:Discontinued, F:Interchangeable by set, K:Q'ty Change

Copyright (C) YANMAR CO., LTD. All RightsReserved.

Fig.62. COVER(FRAME FRONT)

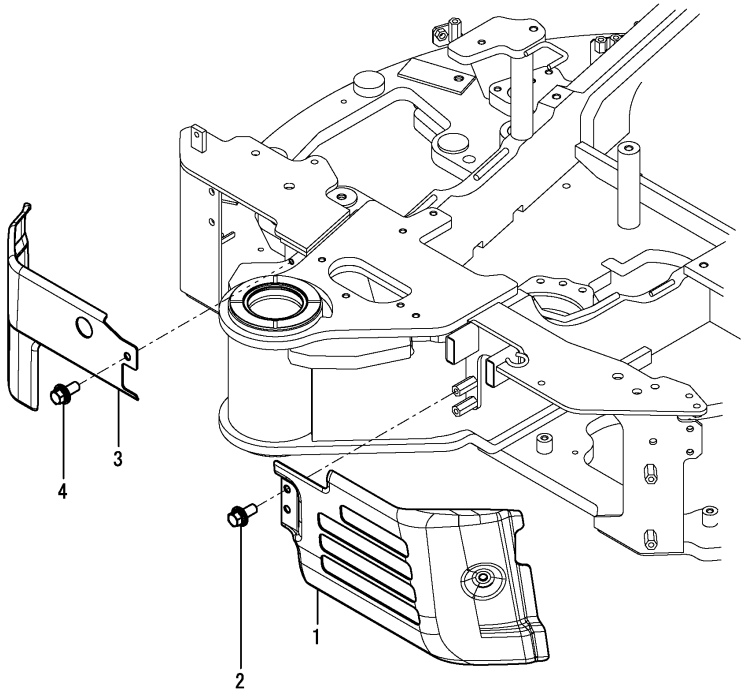

(A)=VIO35-6A P(US)
(B)=VIO35-6A C(US)
(C)=
(D)=
(E)=
(F)=

No.	Lev.	Parts No.	Description	Q'ty (A)	(B)	(C)	(D)	(E)	(F)	I	R
1	1	172B03-61320	COVER	1	1						
2	1	26014-100252	BOLT, M10X 25	3	3						
3	1	172B03-61380	COVER	1	1						
4	1	26014-100252	BOLT, M10X 25	2	2						

N:Old $\overset{\text{Yes}}{\underset{\text{No}}{\leftrightarrows}}$ New, Q:Old $\overset{\text{No}}{\underset{\text{Yes}}{\leftrightarrows}}$ New, R:Old $\overset{\text{Yes}}{\underset{\text{Yes}}{\leftrightarrows}}$ New, S:Old $\overset{\text{No}}{\underset{\text{No}}{\leftrightarrows}}$ New, W:Add, Z:Discontinued, F:Interchangeable by set, K:Q'ty Change

Copyright (C) YANMAR CO., LTD. All RightsReserved.

Fig.63. STEP(CABIN)

(A)=VIO35-6A P(US)
(B)=VIO35-6A C(US)
(C)=
(D)=
(E)=
(F)=

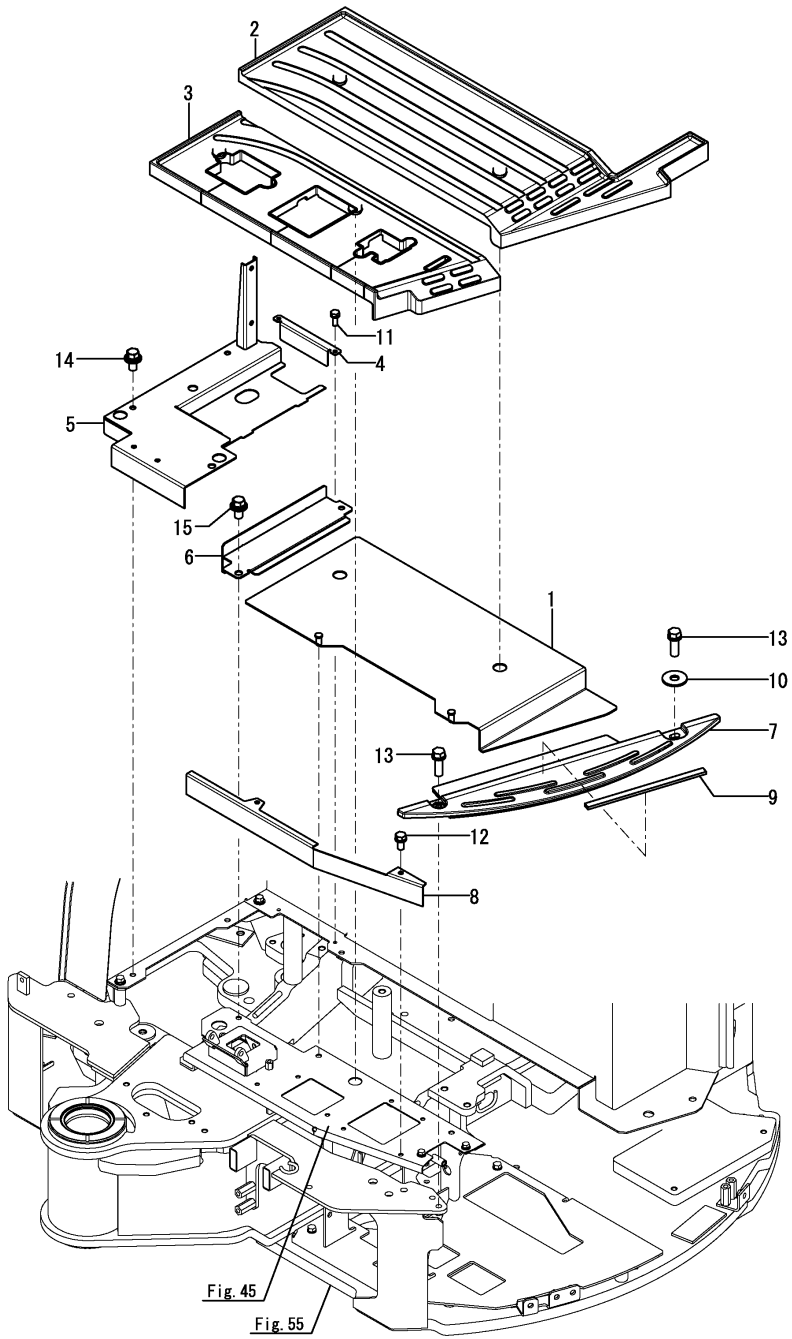

No.	Lev.	Parts No.	Description	Q'ty (A)	(B)	(C)	(D)	(E)	(F)	I	R
1	1	172B03-62050	STEP ASSY		1						
2	1	172B03-62150	FLOOR MAT, A CAB		1						
3	1	172B03-62170	FLOOR MAT, B CAB EX		1						
4	1	172B03-62240	PLATE, PARTITION		1						
5	1	172B03-62251	STEP ASSY		1						
6	1	172B03-62350	COVER ASSY, STEP		1						
7	1	172B03-62520	STEP, NON SLIP		1						
8	1	172B03-62750	COVER		1						
9	1	172538-68450	SHEET, NON SLIP		1						
10	1	22157-100000	WASHER, 10		1						
11	1	26013-060162	BOLT, M6X 16		2						
12	1	26013-080162	BOLT, M8X 16		2						
13	1	26013-100302	BOLT, M10X 30		2						
14	1	26014-100202	BOLT, M10X 20		3						
15	1	26014-100202	BOLT, M10X 20		2						

N:Old ◄Yes/No► New, Q:Old ◄No/Yes► New, R:Old ◄Yes/Yes► New, S:Old ◄No/No► New, W:Add, Z:Discontinued, F:Interchangeable by set, K:Q'ty Change

Copyright (C) YANMAR CO., LTD. All RightsReserved.

Fig.64. STEP(CANOPY)

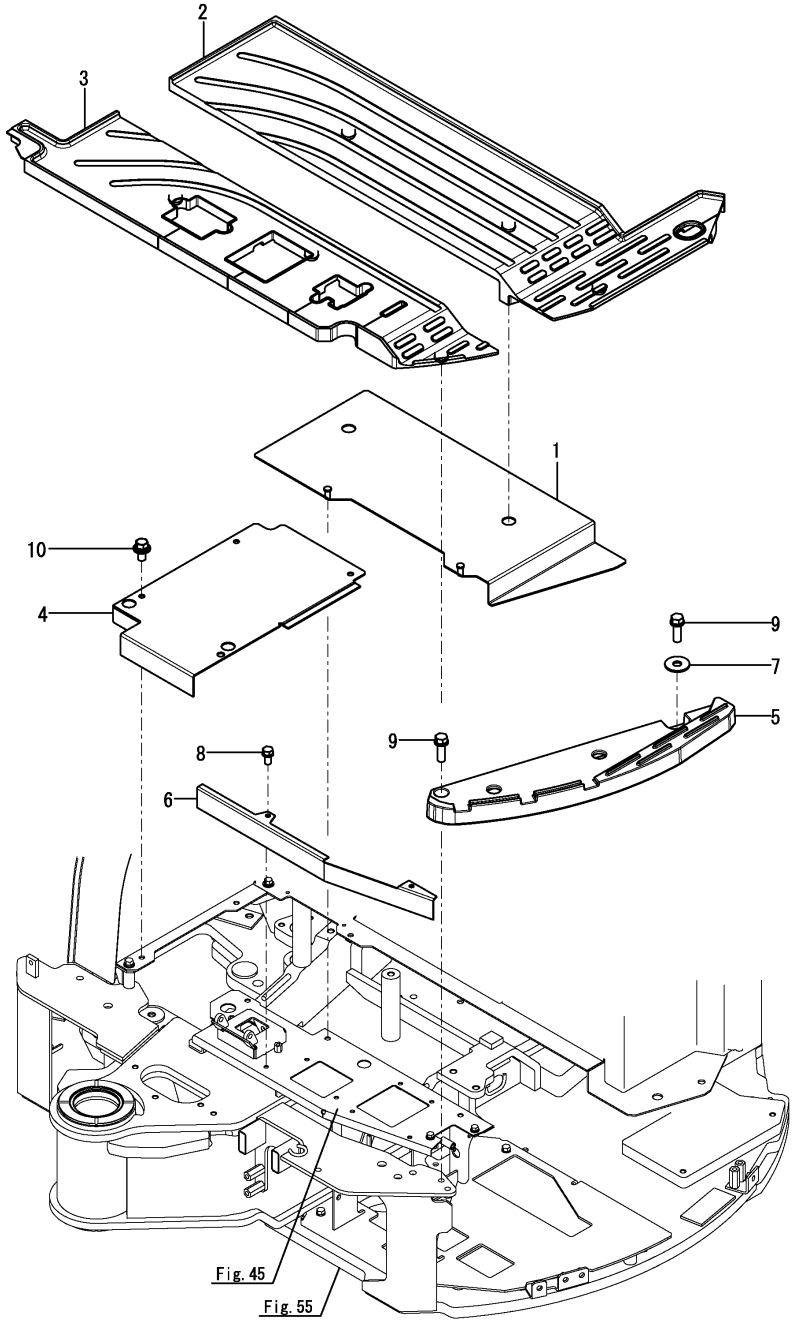

(A)=VIO35-6A P(US)
(B)=VIO35-6A C(US)
(C)=
(D)=
(E)=
(F)=

No.	Lev.	Parts No.	Description	Q'ty (A)	(B)	(C)	(D)	(E)	(F)	I	R
1	1	172B03-62050	STEP ASSY	1							
2	1	172B03-62100	FLOOR MAT, A P	1							
3	1	172B03-62140	FLOOR MAT, B 4P EX	1							
4	1	172B03-62300	STEP ASSY, R 4P	1							
5	1	172B03-62500	STEP, NON SLIP	1							
6	1	172B03-62750	COVER	1							
7	1	22157-100000	WASHER, 10	1							
8	1	26013-080162	BOLT, M8X 16	2							
9	1	26013-100302	BOLT, M10X 30	2							
10	1	26014-100202	BOLT, M10X 20	4							

N:Old $\frac{\text{Yes}}{\text{No}}$ New, Q:Old $\frac{\text{No}}{\text{Yes}}$ New, R:Old $\frac{\text{Yes}}{\text{Yes}}$ New, S:Old $\frac{\text{No}}{\text{No}}$ New, W:Add, Z:Discontinued, F:Interchangeable by set, K:Q'ty Change

Copyright (C) YANMAR CO., LTD. All RightsReserved.

Fig.65. COVER(LEVER)

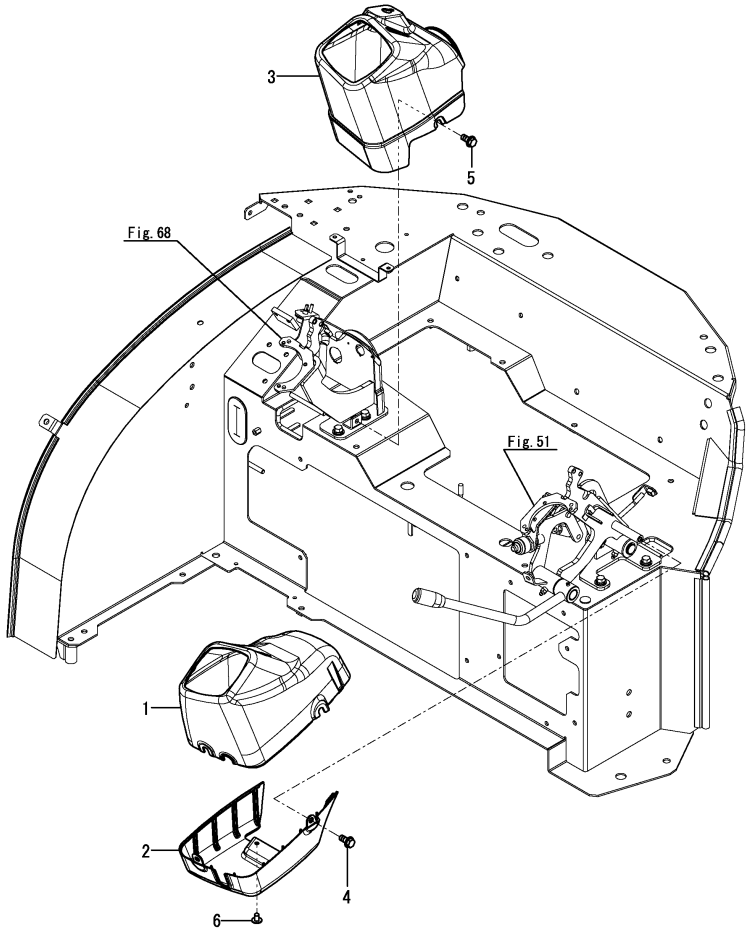

Remarks
(1)Color = WORM GRAY.
(2)Color = DARK OLIVE GRAY.
(3)Color = LIGHT GRAY.
(4)Color = PANTONE 425C.
(5)Color = BLACK.

(A)=VIO35-6A P(US) (D)=
(B)=VIO35-6A C(US) (E)=
(C)= (F)=

No.	Lev.	Parts No.	Description	Q'ty (A)	(B)	(C)	(D)	(E)	(F)	I	R
1	1	172B03-63110	COVER, LEVER	1	1						1
1-1	1	172B03-63610	COVER, LEVER L UP D	1	1					S	4
	(A=MAF001)	(B=MAF001)									
2	1	172B03-63120	COVER, LEVER	1	1						2
2-1	1	172B03-63620	COVER, LEVER L LOW D	1	1					S	4
	(A=MAF001)	(B=MAF001)									
3	1	172B03-63130	COVER, LEVER	1	1						1
3-1	1	172B03-63630	COVER, LEVER R D	1	1					S	4
	(A=MAF001)	(B=MAF001)									
4	1	172519-63240	BOLT	3	3						
5	1	172519-63240	BOLT	2	2						
6	1	1A8110-84210	RIVET	1	1					W	3
	(A=M60502)	(B=M60502)									
6-1	1	1A8060-84280	RIVET, PUSH	1	1					S	5
	(A=MAF001)	(B=MAF001)									

N:Old $\frac{\text{Yes}}{\text{No}}$ New, Q:Old $\frac{\text{No}}{\text{Yes}}$ New, R:Old $\frac{\text{Yes}}{\text{Yes}}$ New, S:Old $\frac{\text{No}}{\text{No}}$ New, W:Add, Z:Discontinued, F:Interchangeable by set, K:Q'ty Change

Copyright (C) YANMAR CO., LTD. All RightsReserved.

Fig.66. COVER(MONITOR)(CANOPY)

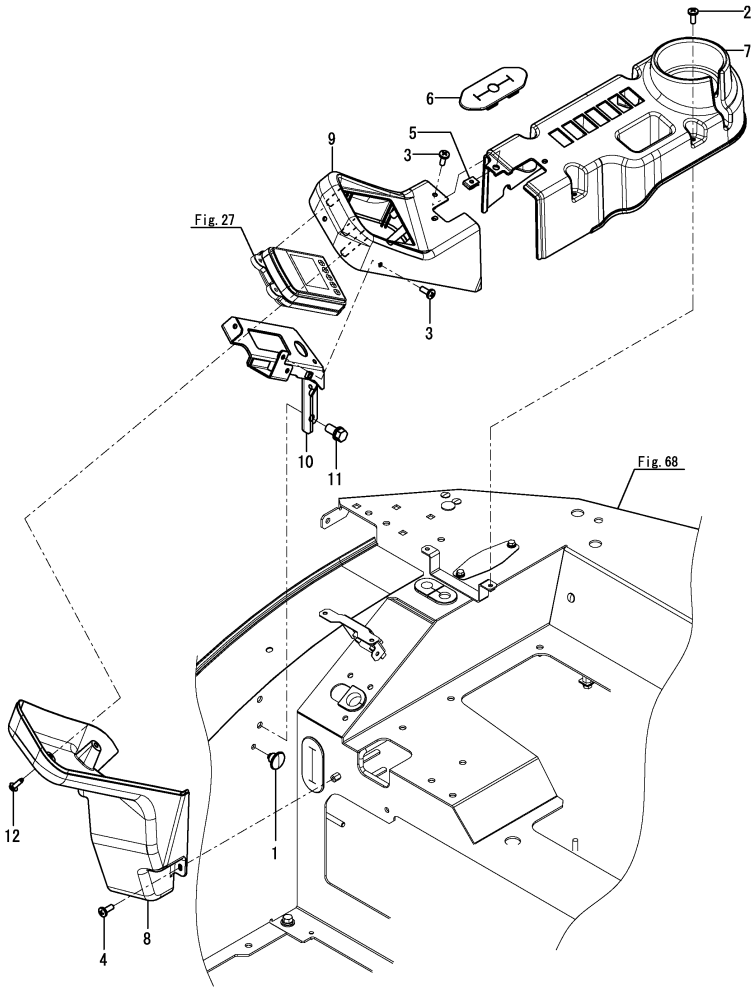

(A)=VIO35-6A P(US) (D)=
(B)=VIO35-6A C(US) (E)=
(C)= (F)=

No.	Lev.	Parts No.	Description	Q'ty (A)	(B)	(C)	(D)	(E)	(F)	I	R
1	1	172444-17660	CLIP, TREE	1							
2	1	172137-46210	SCREW	4							
3	1	172137-46210	SCREW	3							
4	1	172137-46210	SCREW	1							
5	1	198071-61890	NUT, SPEED M6	1							
6	1	172B03-63050	GROMMET	1							
7	1	172B03-63210	COVER, SWITCH	1							1
7-1	1	172B03-63710	COVER, SWITCH P D	1						S	1
	(A=MAF001)										
7A	1	172437-03391	LABEL, RADIATOR	1							2
8	1	172B03-63220	COVER, PANEL	1							3
8-1	1	172B03-63720	COVER, I/P LOW-P D	1						S	5
	(A=MAF001)										
9	1	172B03-63270	COVER, PANEL	1							4
9-1	1	172B04-63770	COVER, I/P UP-P D	1						S	6
	(A=MAF001)										
10	1	172B03-63500	STAY ASSY, PANEL	1							
10-1	1	172B03-63501	STAY ASSY, INPANE	1						N	
	(A=M62091)										
11	1	26013-100202	BOLT, SPRING M10X 20	2							
12	1	26476-050142	SCREW, TAPPING M5X14	2							

Remarks
(1)Attach the No.7A label to this part.
No.7 : Color = WORM GRAY.
No.7-1 : Color = PANTONE 425C.
(2)Label is not illustrated.
(3)Color = DARK OLIVE GRAY.
(4)Color = WORM GRAY.
(5)Color = NAVY GRAY.
(6)Color = PANTONE 425C.

N:Old $\overset{\text{Yes}}{\underset{\text{No}}{\leftrightarrow}}$ New, Q:Old $\overset{\text{No}}{\underset{\text{Yes}}{\leftrightarrow}}$ New, R:Old $\overset{\text{Yes}}{\underset{\text{Yes}}{\leftrightarrow}}$ New, S:Old $\overset{\text{No}}{\underset{\text{No}}{\leftrightarrow}}$ New, W:Add, Z:Discontinued, F:Interchangeable by set, K:Q'ty Change

Copyright (C) YANMAR CO., LTD. All RightsReserved.

Fig.67. COVER(MONITOR)(CABIN)

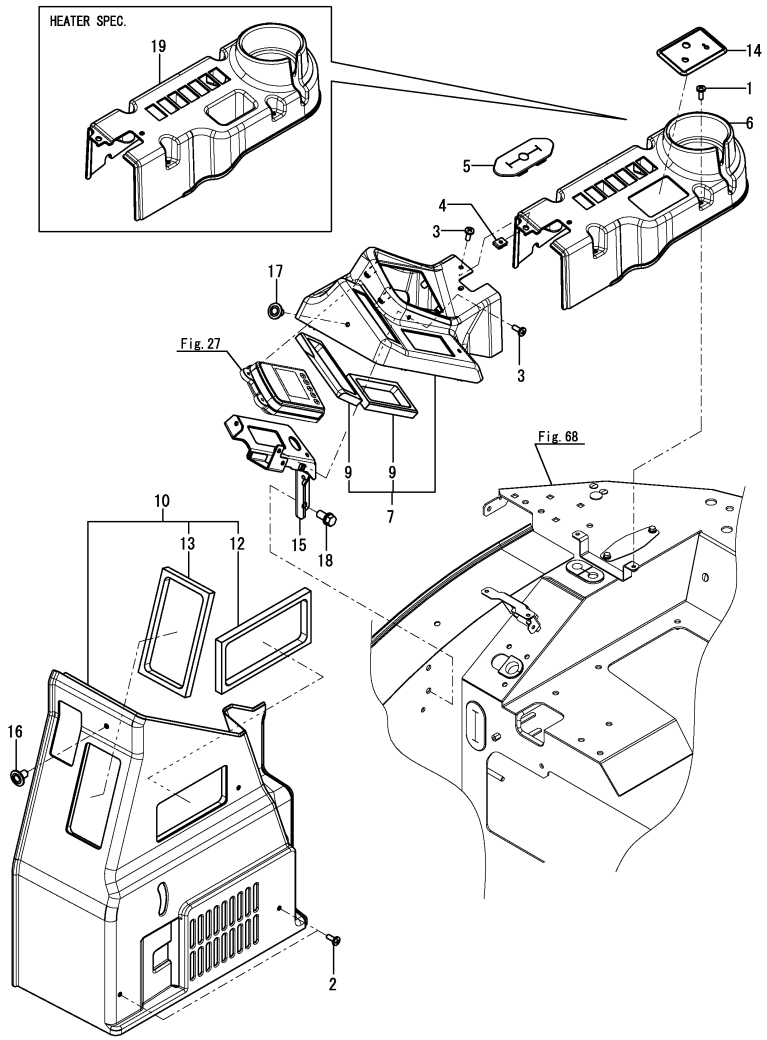

(A)=VIO35-6A P(US) (D)=
(B)=VIO35-6A C(US) (E)=
(C)= (F)=

No.	Lev.	Parts No.	Description	Q'ty (A)	(B)	(C)	(D)	(E)	(F)	I	R
1	1	172137-46210	SCREW		4						
2	1	172137-46210	SCREW		2						
3	1	172137-46210	SCREW		2						
4	1	198071-61890	NUT, SPEED M6		1						
5	1	172B03-63050	GROMMET		1						
6	1	172B03-63200	COVER, SWITCH		1						3
6-1	1	172B03-63700	COVER, SWITCH C D		1					S	5
		(B=MAF001)									
7	1	172B03-63250	COVER ASSY, PANEL		1						3
7-1	1	172B03-63750	COVER ASSY, I/P C D		1					S	5
		(B=MAF001)									
9	2	172B03-63290	SEAL, DUCT		2						
10	1	172B03-63300	COVER ASSY		1						1
10-1	1	172B03-63650	COVER ASSY, AC D		1					S	1
		(B=MAF001)									
12	2	172B03-63320	SEAL, DUCT		1						
13	2	1A7470-87320	SEAL, DUCT SIDE		1						
13A	1	172437-03302	LABEL, MANUAL		1						2
14	1	172B03-63340	PANEL, AC		1						
14-1	1	172B03-63670	PANEL, AC D		1					S	5
		(B=MAF001)									
15	1	172B03-63500	STAY ASSY, PANEL		1						
15-1	1	172B03-63501	STAY ASSY, INPANE		1					N	
		(B=M62091)									
16	1	1A8110-84210	RIVET		2						4
16-1	1	1A8060-84280	RIVET, PUSH		2					S	6
		(B=MAF001)									
17	1	1A8110-84210	RIVET		2						4
17-1	1	1A8060-84280	RIVET, PUSH		2					S	6
		(B=MAF001)									
18	1	26013-100202	BOLT, SPRING M10X 20		2						
19	1	172B03-63210	COVER, SWITCH		1						3
19-1	1	172B03-63710	COVER, SWITCH P D		1					S	5
		(B=MAF001)									

Remarks
(1)Attach the No.13A label to this part.
No.10 : Color = DARK OLIVE GRAY.
No.10-1 : Color = NAVY GRAY.
(2)Label is not illustrated.
(3)Color = WORM GRAY.
(4)Color = LIGHT GRAY.
(5)Color = PANTONE 425C.
(6)Color = BLACK.

N:Old ←Yes/No→ New, Q:Old ←No/Yes→ New, R:Old ←Yes/Yes→ New, S:Old ←No/No→ New, W:Add, Z:Discontinued, F:Interchangeable by set, K:Q'ty Change

Copyright (C) YANMAR CO., LTD. All RightsReserved.

Fig.68. SEAT MOUNT

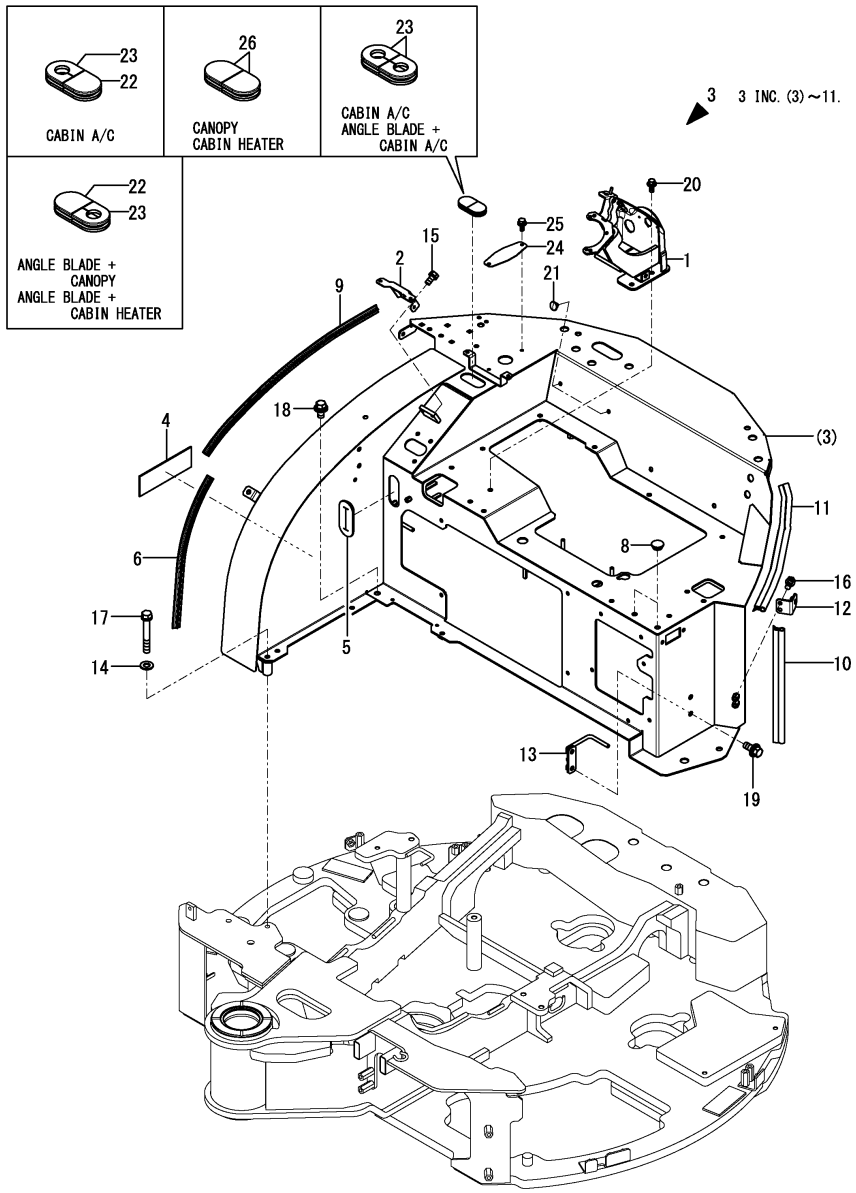

(A)=VIO35-6A P(US)
(B)=VIO35-6A C(US)
(C)=
(D)=
(E)=
(F)=

No.	Lev.	Parts No.	Description	Q'ty (A)	(B)	(C)	(D)	(E)	(F)	I	R
1	1	172B03-46400	STAND ASSY, LEVER	1	1						
2	1	172B03-63400	STAY ASSY, COVER	1	1						
3	1	172B03-64200	MOUNT ASSY, SEAT	1	1						1
4	2	172446-62910	PLATE, RUBBER	1	1						
5	2	172B03-63450	GROMMET	1	1						
6	2	172B03-64190	RUBBER, SEAL 420	1	1						
8	2	172187-64900	PLUG	2	2						
9	2	172538-65320	RUBBER, SEAL 625	1	1						
10	2	172164-66480	RUBBER 340, SEAL	1	1						
11	2	172164-66640	RUBBER, SEAL	1	1						
11A	1	172437-03302	LABEL, MANUAL	1							2
12	1	172B03-64450	STAY ASSY, BONNET	1	1						
13	1	172B03-78050	GUIDE ASSY, HOSE	1	1						
14	1	22137-100000	WASHER, 10	1	1						
15	1	26013-080162	BOLT, SPRING M8X 16	2	2						
16	1	26013-080162	BOLT, SPRING M8X 16	2	2						
17	1	26013-100702	BOLT, SPRING M10X 70	1	1						
18	1	26014-100202	BOLT, M10X 20	1	1						
19	1	26014-100252	BOLT, M10X 25	2	2						
20	1	26014-100252	BOLT, M10X 25	3	3						
21	1	172444-17660	CLIP, TREE	2	2						
22	1	172165-62830	GROMMET	1	1						
23	1	172491-62830	GROMMET	1	1						
24	1	172B03-64990	PLATE, COVER	1	1						
25	1	26014-060162	BOLT, M6X 16	2	2						
26	1	172165-62830	GROMMET	2	2						

Remarks
(1)Attach the No.11A(Canopy specification) label to this part.
(2)Label is not illustrated.

N:Old $\xleftrightarrow[\text{No}]{\text{Yes}}$ New, Q:Old $\xleftrightarrow[\text{Yes}]{\text{No}}$ New, R:Old $\xleftrightarrow[\text{Yes}]{\text{Yes}}$ New, S:Old $\xleftrightarrow[\text{No}]{\text{No}}$ New, W:Add, Z:Discontinued, F:Interchangeable by set, K:Q'ty Change

Copyright (C) YANMAR CO., LTD. All RightsReserved.

Fig.69. SEAT MOUNT(COVER)

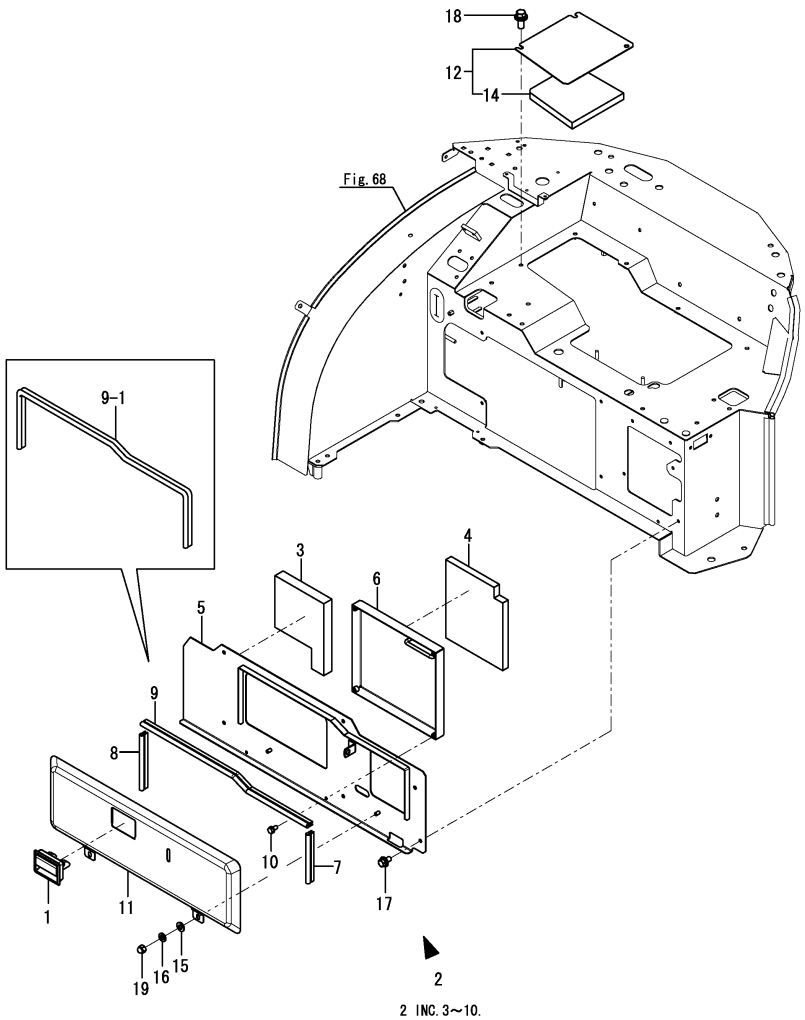

(A)=VIO35-6A P(US) (D)=
(B)=VIO35-6A C(US) (E)=
(C)= (F)=

No.	Lev.	Parts No.	Description	Q'ty (A)	(B)	(C)	(D)	(E)	(F)	I	R
1	1	172187-61421	HANDLE, LOCK	1	1						4
1-1	1	172B02-69040	HANDLE,LOCK BLACK	1	1					S	5
	(A=MAF001)	(B=MAF001)									
2	1	172B03-64500	COVER ASSY, MANUAL	1	1						
3	2	172B03-64070	SPONGE	1	1						
4	2	172B03-64080	SPONGE	1	1						
5	2	172B03-64510	COVER ASSY, MANUAL	1	1						
6	2	172B03-64570	BOX ASSY, MANUAL	1	1						
7	2	172B03-64680	SEAL, 155	1	1					Z	
	(A=M61208)	(B=M61208)									
8	2	172B03-64690	SEAL, 175	1	1					Z	
	(A=M61208)	(B=M61208)									
9	2	172A64-64910	SEAL, 600	1	1						
9-1	2	172458-65070	SEAL	1	1					N	
	(A=M61208)	(B=M61208)									
10	2	26013-060122	BOLT, SPRING M6X 12	4	4						
11	1	172B03-64600	COVER ASSY, MANUAL	1	1						1
11A	1	172472-03141	LABEL, SUPPORT	1	1						3
11B	1	172B03-03410	LABEL,SEAT TILT UP	1	1						3
11C	1	172437-03432	LABEL, STEERING	1	1						3
11D	1	172437-03601	LABEL, 2-WAY US	1	1						3
12	1	172B03-64650	COVER ASSY, ENGINE	1	1						2
14	2	172B03-64670	SPONGE	1	1						
14A	1	172437-03312	LABEL, SLOPE	1	1						3
14B	1	172437-03471	LABEL, LEVER LOCK	1	1						3
15	1	22137-080000	WASHER, 8	2	2						
16	1	22217-080000	WASHER, SPRING 8	2	2						
17	1	26014-080162	BOLT, M8X 16	6	6						
18	1	26014-100252	BOLT, M10X 25	2	2						
19	1	26657-080002	NUT, CAP M8	2	2						

Remarks
(1)Attach the No.11A, 11B, 11C & 11D label to this part.
(2)Attach the No.14A & 14B label to this part.
(3)Label is not illustrated.
(4)Color = DARK OLIVE GRAY.
(5)Color = BLACK.

N:Old $\xleftarrow[\text{No}]{\text{Yes}}$ New, Q:Old $\xleftarrow[\text{Yes}]{\text{No}}$ New, R:Old $\xleftarrow[\text{Yes}]{\text{Yes}}$ New, S:Old $\xleftarrow[\text{No}]{\text{No}}$ New, W:Add, Z:Discontinued, F:Interchangeable by set, K:Q'ty Change

Copyright (C) YANMAR CO., LTD. All RightsReserved.

Fig.70. SEAT

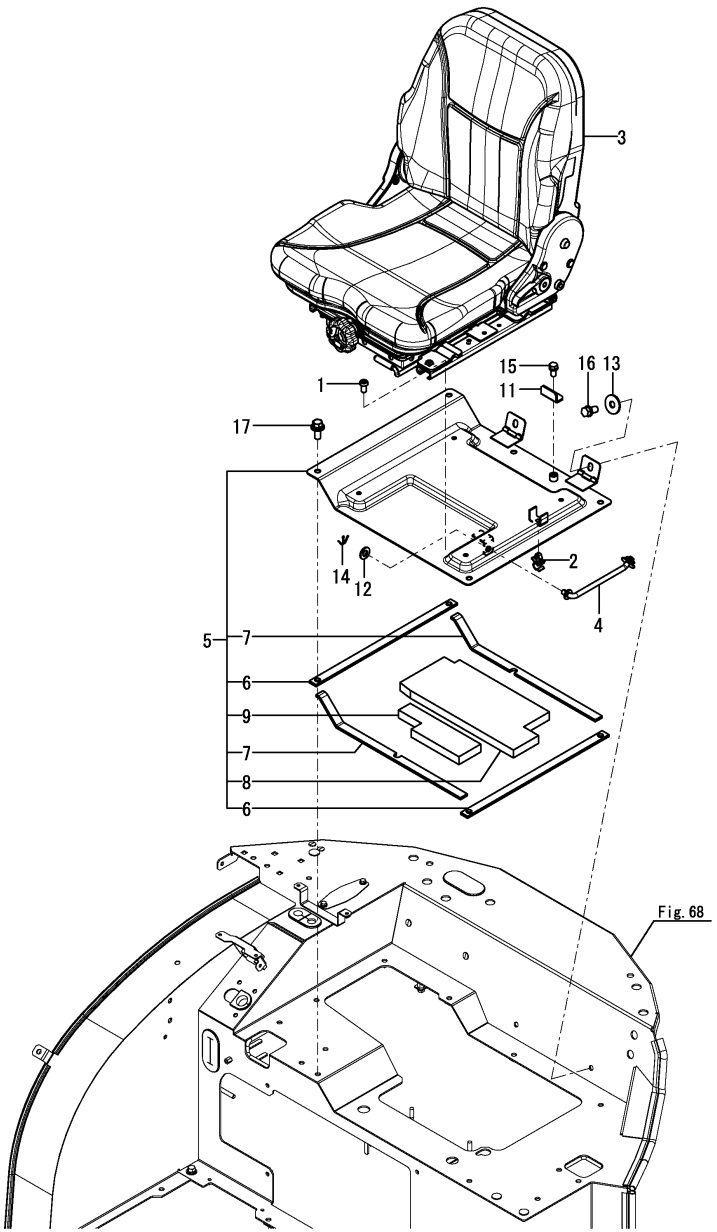

(A)=VIO35-6A P(US)
(B)=VIO35-6A C(US)
(C)=
(D)=
(E)=
(F)=

No.	Lev.	Parts No.	Description	Q'ty (A)	(B)	(C)	(D)	(E)	(F)	I	R
1	1	172455-61710	BOLT M 8X 16	4	4						
2	1	1A7610-62250	HOLDER, ROD 10	1	1						
3	1	172B02-64800	SEAT ASSY,SUS	1	1						1
4	1	172B03-64830	ROD ASSY, STOPPER	1	1						
5	1	172B03-64850	PLATE ASSY, SEAT SUS	1	1						
6	2	172B03-64010	SEAL, SEAT	2	2						
7	2	172B03-64020	SEAL, SEAT	2	2						
8	2	172B03-64030	SPONGE, SEAT SUS A	1	1						
9	2	172B03-64040	SPONGE, SEAT SUS B	1	1						
11	1	172B03-64960	PLATE, STOPPER	1	1						
12	1	22137-100000	WASHER, 10	1	1						
13	1	22157-100000	WASHER, 10	2	2						
14	1	22417-200200	PIN, COTTER 2.0X20	1	1						
15	1	26013-080162	BOLT, M8X 16	1	1						
16	1	26013-100202	BOLT, M10X 20	2	2						
17	1	26014-100252	BOLT, M10X 25	5	5						

Remarks
(1)Inner parts are shown in Fig.71.

N:Old $\frac{\text{Yes}}{\text{No}}$ New, Q:Old $\frac{\text{No}}{\text{Yes}}$ New, R:Old $\frac{\text{Yes}}{\text{Yes}}$ New, S:Old $\frac{\text{No}}{\text{No}}$ New, W:Add, Z:Discontinued, F:Interchangeable by set, K:Q'ty Change

Copyright (C) YANMAR CO., LTD. All RightsReserved.

Fig.71. SEAT(INNER PARTS)

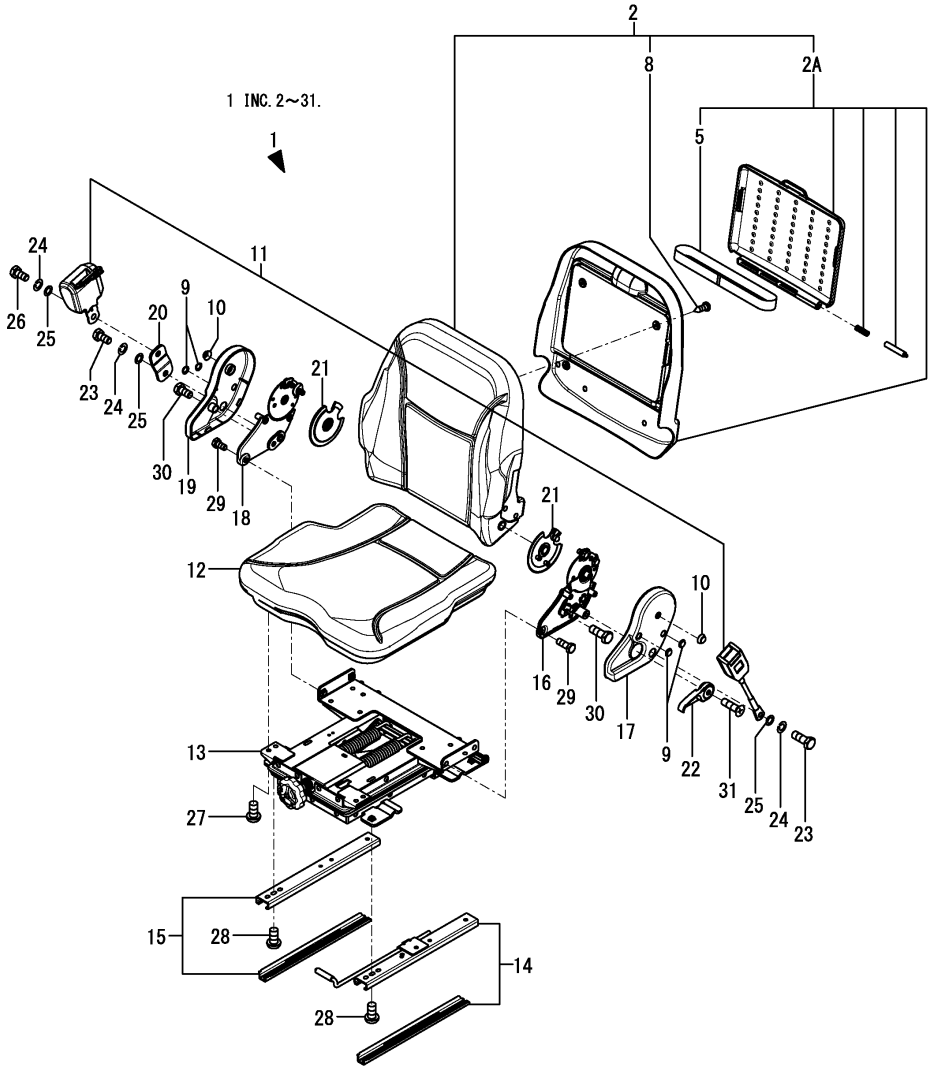

(A)=VIO35-6A P(US) (D)=
(B)=VIO35-6A C(US) (E)=
(C)= (F)=

No.	Lev.	Parts No.	Description	Q'ty (A)	(B)	(C)	(D)	(E)	(F)	I	R
1	1	172B02-64800	SEAT ASSY,SUS	1	1						
2	2	172B02-64210	SEAT ASSY, BACK	1	1						
2A	3	172B02-64270	BOX ASSY,MANUAL	1	1					W	
	(A=*2017.04.)	(B=*2017.04.)									
5	4	172A89-64950	BAND	1	1						
8	3	22859-500160	SCREW, 5X16	4	4						
8-1	3	22859-500200	SCREW, 5.0 X 20	4	4					N	
	(A=*2017.04.)	(B=*2017.04.)									
9	2	172B02-64250	CAP	4	4						
10	2	172B02-64260	CAP	2	2						
11	2	172A89-64740	BELT ASSY, SEAT	1	1						
12	2	172A89-64780	SEAT, CUSHION	1	1						
13	2	172A89-64790	SEAT, SPRING	1	1						
14	2	172A89-64800	RAIL ASSY	1	1						
15	2	172A89-64810	RAIL ASSY	1	1						
16	2	172A89-64820	HINGE ASSY	1	1						
17	2	172A89-64830	COVER	1	1						
18	2	172A89-64840	HINGE ASSY	1	1						
19	2	172A89-64850	COVER	1	1						
20	2	172A89-64860	BRACKET ASSY	1	1						
21	2	172A89-64870	COVER	2	2						
22	2	172A89-64880	LEVER	1	1						
23	2	172A89-64890	BOLT	2	2						
24	2	172A89-64900	SPRING	3	3						
25	2	172A89-64910	WASHER	3	3						
26	2	172A89-64920	BOLT	1	1						
27	2	26106-080162	BOLT, M8X 16 PLATED	4	4						
28	2	26106-080162	BOLT, M8X 16 PLATED	4	4						
29	2	26106-100162	BOLT, M10X 16 PLATED	6	6						
30	2	26106-100252	BOLT, M10X 25 PLATED	2	2						
31	2	26559-050202	SCREW, M5X20	1	1						

N:Old $\xleftarrow[\text{No}]{\text{Yes}}$ New, Q:Old $\xleftarrow[\text{Yes}]{\text{No}}$ New, R:Old $\xleftarrow[\text{Yes}]{\text{Yes}}$ New, S:Old $\xleftarrow[\text{No}]{\text{No}}$ New, W:Add, Z:Discontinued, F:Interchangeable by set, K:Q'ty Change

Copyright (C) YANMAR CO., LTD. All RightsReserved.

Fig.72. HANDRAIL

(A)=VIO35-6A P(US)
(B)=VIO35-6A C(US)
(C)=
(D)=
(E)=
(F)=

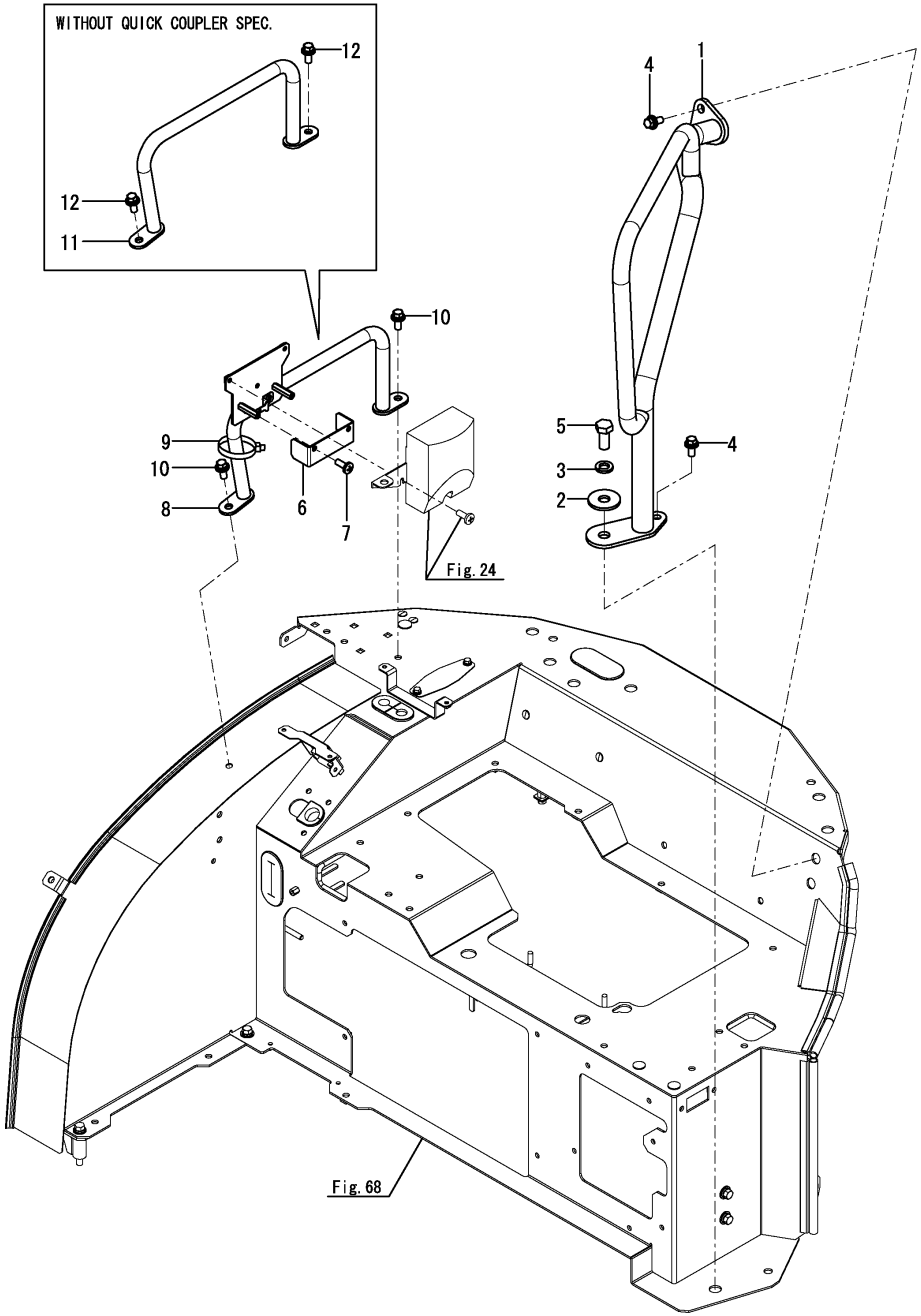

No.	Lev.	Parts No.	Description	Q'ty (A)	(B)	(C)	(D)	(E)	(F)	I	R
1	1	172B03-64700	HANDRAIL ASSY	1							
2	1	22157-160000	WASHER, 16	1							
3	1	22217-160000	WASHER, SPRING 16	1							
4	1	26014-100252	BOLT, M10X 25	3							
5	1	26116-160352	BOLT, M16X 35 PLATED	1							
6	1	172B03-17990	COVER, CONNECTOR	1							
7	1	172137-46210	SCREW	2							
8	1	172B03-64780	HANDRAIL ASSY	1							
9	1	172122-79940	CLIP, HOSE	1							
10	1	26014-100252	BOLT, M10X 25	2							
11	1	172B03-64750	HANDRAIL ASSY, R	1							
12	1	26014-100252	BOLT, M10X 25	2							

N:Old $\xleftarrow[\text{No}]{\text{Yes}}$ New, Q:Old $\xleftarrow[\text{Yes}]{\text{No}}$ New, R:Old $\xleftarrow[\text{Yes}]{\text{Yes}}$ New, S:Old $\xleftarrow[\text{No}]{\text{No}}$ New, W:Add, Z:Discontinued, F:Interchangeable by set, K:Q'ty Change

Copyright (C) YANMAR CO., LTD. All RightsReserved.

Fig.73. BONNET(REAR)

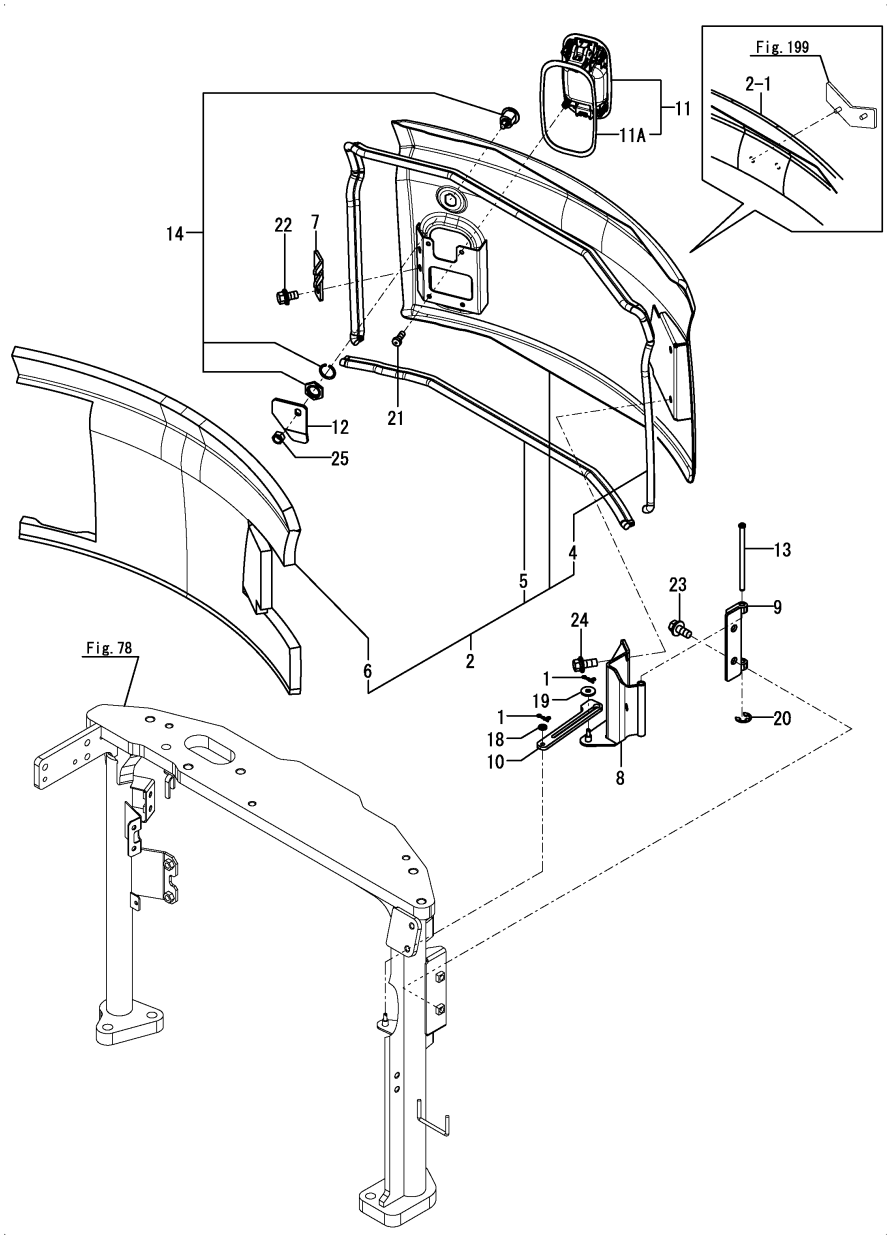

(A)=VIO35-6A P(US) (D)=
(B)=VIO35-6A C(US) (E)=
(C)= (F)=

No.	Lev.	Parts No.	Description	Q'ty (A)	(B)	(C)	(D)	(E)	(F)	I	R
1	1	1C6281-52310-1	PIN, SNAP 6	2	2						
2	1	172B03-65100	BONNET ASSY, A	1	1						1
2-1	1	172B02-65100	BONNET ASSY, A-FY	1	1					S	
	(A=MAF001)	(B=MAF001)									
4	2	172B03-65320	SEAL, 1625	1	1						
5	2	172B03-65330	SEAL, 735	1	1						
6	2	172B03-65340	SPONGE	1	1						
6A	1	172437-03381	LABEL, SWING AREA	1	1						2
6B	1	172437-03402	LABEL, ENGINE COVER	1	1						2
6C	1	172A36-03411	LABEL, ENGINE ROOM	1	1						2
7	1	172B03-65170	GUIDE, BONNET	1	1						
8	1	172B03-65200	HINGE ASSY,B	1	1						
9	1	172B03-65250	HINGE ASSY,A	1	1						
10	1	172B03-65290	GUIDE, LOCK	1	1						
11	1	172B03-65310	HANDLE, LOCK	1	1						
11A	2	172B02-65350	SEAL	1	1					W	
	(A=M60588)	(B=M60588)									
12	1	172B03-65391	PLATE,KEY LOCK	1	1						
13	1	172448-65490	SHAFT, HINGE	1	1						
14	1	172B03-66170	CYLINDER ASSY, KEY	1	1						
18	1	22117-060000	WASHER, 6	1	1						
19	1	22157-060000	WASHER, 6	1	1						
20	1	22272-000070	RING, E- 7	1	1						
21	1	22857-600160	SCREW, 6X16	4	4						
22	1	26014-100202	BOLT, M10X 20	2	2						
23	1	26014-100252	BOLT, M10X 25	2	2						
24	1	26014-100252	BOLT, M10X 25	2	2						
25	1	26347-100002	NUT, M10	1	1						

Remarks
(1)Attach the No.6A, 6B & 6C label to this part.
(2)Label is not illustrated.

N:Old $\overset{\text{Yes}}{\underset{\text{No}}{\leftrightarrow}}$ New, Q:Old $\overset{\text{No}}{\underset{\text{Yes}}{\leftrightarrow}}$ New, R:Old $\overset{\text{Yes}}{\underset{\text{Yes}}{\leftrightarrow}}$ New, S:Old $\overset{\text{No}}{\underset{\text{No}}{\leftrightarrow}}$ New, W:Add, Z:Discontinued, F:Interchangeable by set, K:Q'ty Change

Copyright (C) YANMAR CO., LTD. All RightsReserved.

Fig.74. BONNET(FRONT)

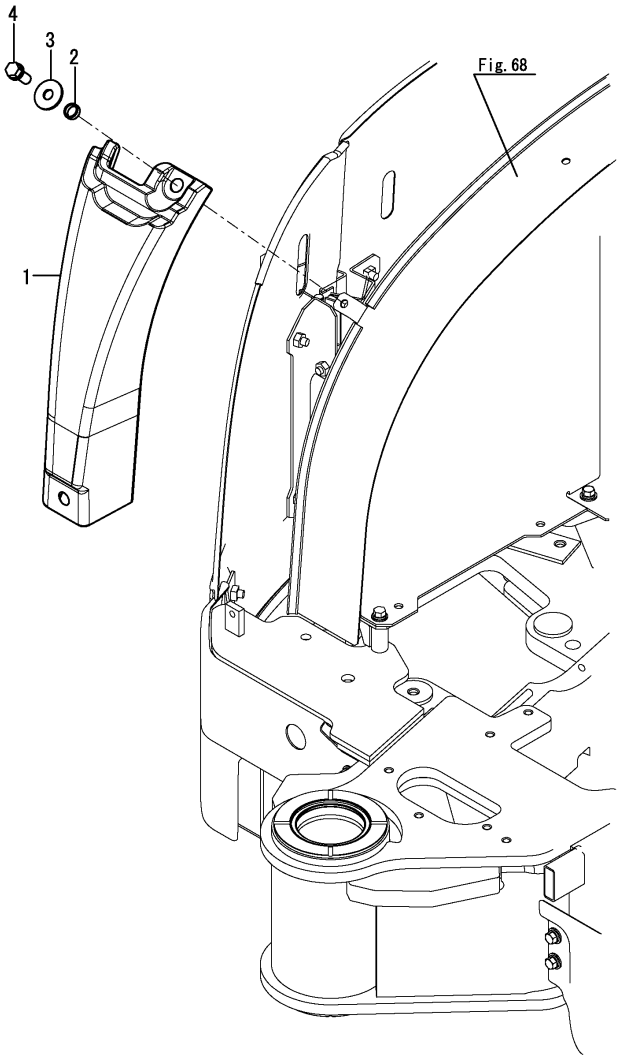

(A)=VIO35-6A P(US)
(B)=VIO35-6A C(US)
(C)=
(D)=
(E)=
(F)=

No.	Lev.	Parts No.	Description	Q'ty (A)	(B)	(C)	(D)	(E)	(F)	I	R
1	1	172B03-65410	BONNET, B BLACK	1	1						
2	1	172A47-65550	COLLAR	2	2						
3	1	22157-100000	WASHER, 10	2	2						
4	1	26013-100252	BOLT, M10X 25	2	2						

N:Old $\frac{\text{Yes}}{\text{No}}$ New, Q:Old $\frac{\text{No}}{\text{Yes}}$ New, R:Old $\frac{\text{Yes}}{\text{Yes}}$ New, S:Old $\frac{\text{No}}{\text{No}}$ New, W:Add, Z:Discontinued, F:Interchangeable by set, K:Q'ty Change

Copyright (C) YANMAR CO., LTD. All RightsReserved.

Fig.75. BONNET(LEFT)

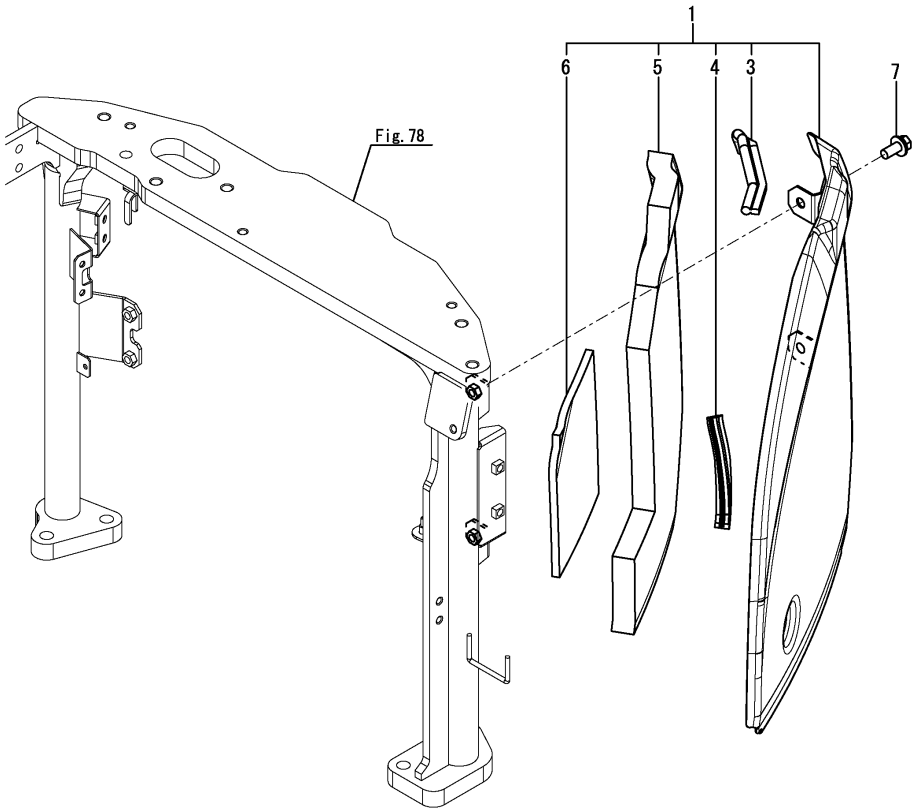

(A)=VIO35-6A P(US)
(B)=VIO35-6A C(US)
(C)=
(D)=
(E)=
(F)=

No.	Lev.	Parts No.	Description	Q'ty (A)	(B)	(C)	(D)	(E)	(F)	I	R
1	1	172B03-65600	BONNET ASSY, L	1	1						
3	2	172B03-65650	SEAL, 220	1	1						
4	2	172B03-65660	SEAL, 175	1	1						
5	2	172B03-65670	SPONGE	1	1						
6	2	172B03-65680	SPONGE	1	1						
7	1	26014-100252	BOLT, M10X 25	3	3						

N:Old $\overset{\text{Yes}}{\underset{\text{No}}{\rightleftarrows}}$ New, Q:Old $\overset{\text{No}}{\underset{\text{Yes}}{\rightleftarrows}}$ New, R:Old $\overset{\text{Yes}}{\underset{\text{Yes}}{\rightleftarrows}}$ New, S:Old $\overset{\text{No}}{\underset{\text{No}}{\rightleftarrows}}$ New, W:Add, Z:Discontinued, F:Interchangeable by set, K:Q'ty Change

Copyright (C) YANMAR CO., LTD. All RightsReserved.

Fig.76. BONNET(RIGHT)

(A)=VIO35-6A P(US)
(B)=VIO35-6A C(US)
(C)=
(D)=
(E)=
(F)=

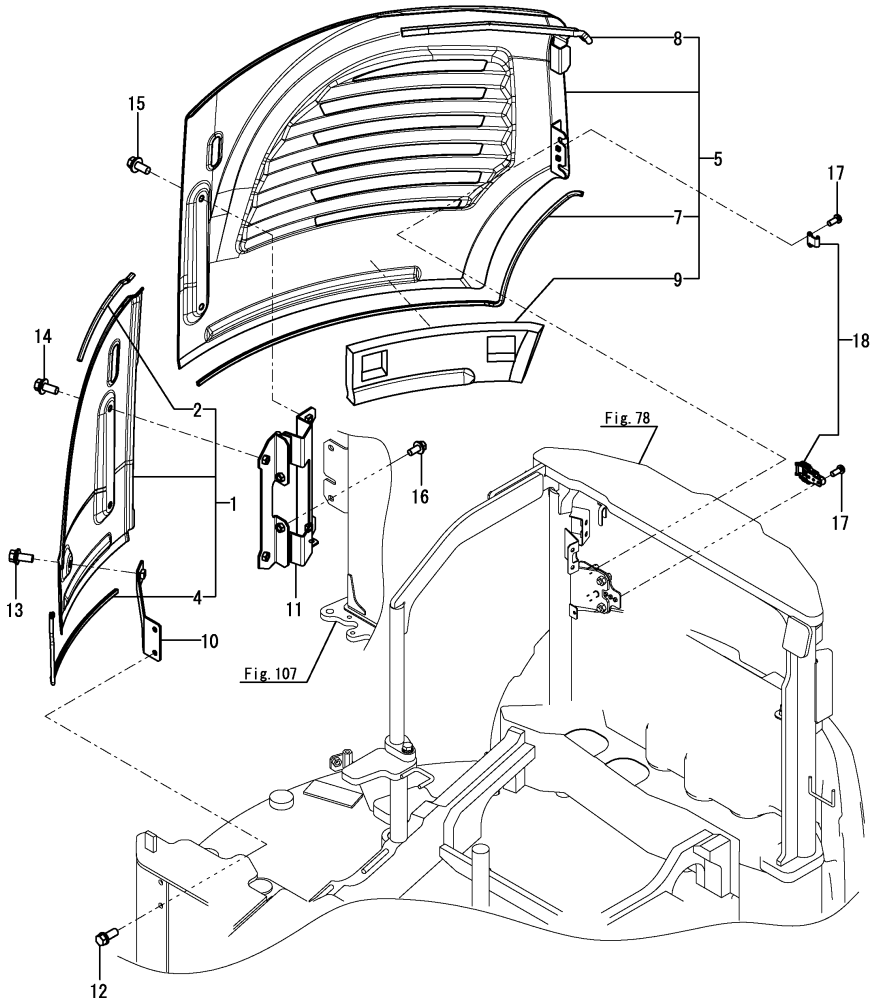

No.	Lev.	Parts No.	Description	Q'ty (A)	(B)	(C)	(D)	(E)	(F)	I	R
1	1	172B03-65800	BONNET ASSY,R FR	1	1						
2	2	172434-61200	TRIM, 245	1	1						
4	2	172B03-65870	SEAL, 585	1	1						
5	1	172B03-65820	BONNET ASSY,R RR	1	1						1
7	2	172B03-65880	SEAL, 1105	1	1						
8	2	172B03-65890	SEAL, 400	1	1						
9	2	172B03-65940	SPONGE	1	1						
9A	1	172437-03322	LABEL, RESEVOIR	1	1						2
10	1	172B03-65900	STAY ASSY, BONNET	1	1						
11	1	172B03-65950	HINGE ASSY, BON. R	1	1						
12	1	26013-100252	BOLT, M10X 25	2	2						
13	1	26014-100252	BOLT, M10X 25	1	1						
14	1	26014-100252	BOLT, M10X 25	2	2						
15	1	26014-100252	BOLT, M10X 25	2	2						
16	1	26014-100252	BOLT, M10X 25	2	2						
17	1	26557-050122	SCREW, M5X12	5	5						
18	1	933171-18750	CLIP, CATCH	1	1						

Remarks
(1)Attach the No.9A label to this part.
(2)Label is not illustrated.

N:Old $\frac{\text{Yes}}{\text{No}}$ New, Q:Old $\frac{\text{No}}{\text{Yes}}$ New, R:Old $\frac{\text{Yes}}{\text{Yes}}$ New, S:Old $\frac{\text{No}}{\text{No}}$ New, W:Add, Z:Discontinued, F:Interchangeable by set, K:Q'ty Change

Copyright (C) YANMAR CO., LTD. All RightsReserved.

Fig.77. CANOPY

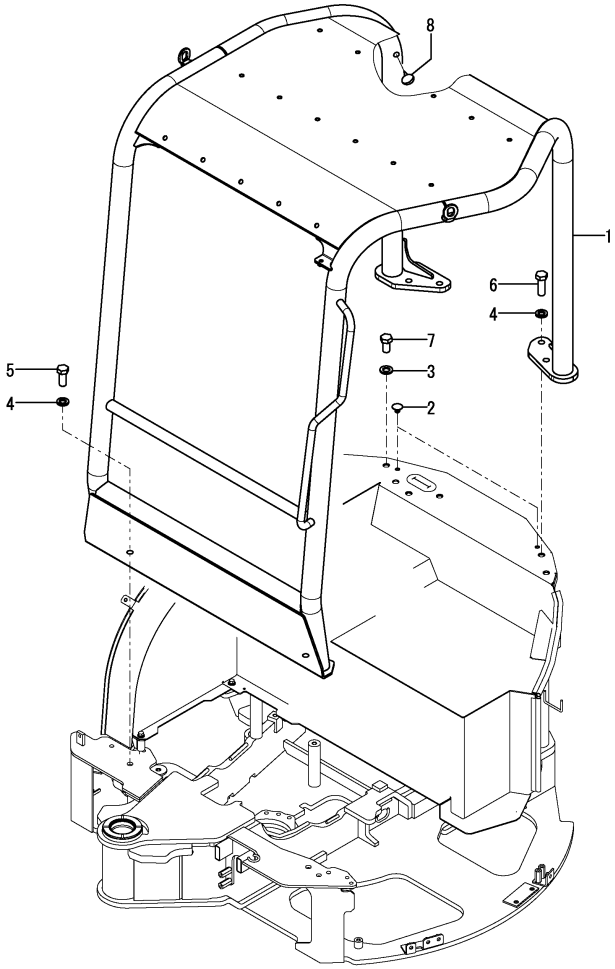

(A)=VIO35-6A P(US) (D)=
(B)=VIO35-6A C(US) (E)=
(C)= (F)=

No.	Lev.	Parts No.	Description	Q'ty (A)	(B)	(C)	(D)	(E)	(F)	I	R
1	1	172B03-66300	CANOPY ASSY, ROPS	1							1
1A	1	172437-03343	LABEL, TRANSPORT	1							2
1B	1	172437-03372	LABEL, NEUTRAL	1							2
1C	1	172437-03432	LABEL, STEERING	1							2
1D	1	172437-03451	LABEL, SEAT BELT	1							2
1E	1	172B03-03480	LABEL,LIFT EX	1							2
1F	1	172437-03441	LABEL, ROPS	1							2
1G	1	172472-03241	LABEL, PINUS	1							2
1H	1	172B03-04400	LABEL,WARNING HITCH	1							2
1I	1	172B03-04410	LABEL,SAND US	1							2
1J	1	172A79-03220	LABEL,WARNING ANGLE	1							2
1K	1	172B03-03680	LABEL,LIFT ANGLE	1							2
2	1	172176-68210	CLIP, TREE	2							
3	1	22137-160000	WASHER, 16	1							
4	1	22217-160000	WASHER, SPRING 16	6							
5	1	26076-160402	BOLT, 10.916X 40	2							
6	1	26076-160502	BOLT, 10.916X 50	4							
7	1	26116-160302	BOLT, M16X 30 PLATED	1							
8	1	1E8080-78890	PLUG, 14	1							

Remarks
(1)Standard blade specification:
Attach the No.1A, 1B, 1C, 1D, 1E, 1F, 1G, 1H & 1I label to this part.
Angle blade specification:
Attach the No.1A, 1B, 1C, 1D, 1F, 1G, 1H, 1I, 1J & 1K label to this part.
(2)Label is not illustrated.

N:Old $\frac{\text{Yes}}{\text{No}}$ New, Q:Old $\frac{\text{No}}{\text{Yes}}$ New, R:Old $\frac{\text{Yes}}{\text{Yes}}$ New, S:Old $\frac{\text{No}}{\text{No}}$ New, W:Add, Z:Discontinued, F:Interchangeable by set, K:Q'ty Change

Copyright (C) YANMAR CO., LTD. All RightsReserved.

Fig.78. MOUNT

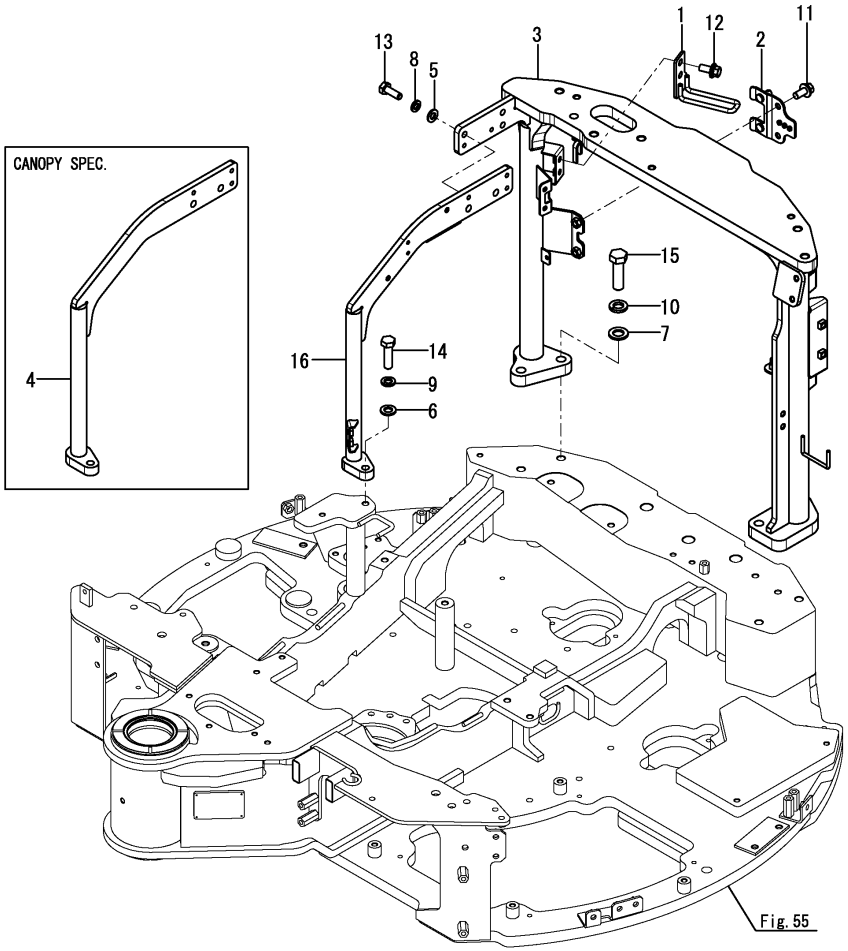

(A)=VIO35-6A P(US)
(B)=VIO35-6A C(US)
(C)=
(D)=
(E)=
(F)=

No.	Lev.	Parts No.	Description	Q'ty (A)	(B)	(C)	(D)	(E)	(F)	I	R
1	1	172B03-65350	CATCH ASSY, BONNET	1	1						
2	1	172B03-65920	BRACKET ASSY,BON.R	1	1						
3	1	172B03-67510	MOUNT ASSY,A CANOPY	1	1						
4	1	172B03-67810	MOUNT ASSY,B CANOPY	1							
5	1	22137-100000	WASHER, 10	3	3						
6	1	22137-120000	WASHER, 12	1	1						
7	1	22137-160000	WASHER, 16	4	4						
8	1	22217-100000	WASHER, SPRING 10	3	3						
9	1	22217-120000	WASHER, SPRING 12	1	1						
10	1	22217-160000	WASHER, SPRING 16	4	4						
11	1	26014-100252	BOLT, M10X 25	2	2						
12	1	26014-100252	BOLT, M10X 25	2	2						
13	1	26076-100302	BOLT, 10.910X 30	3	3						
14	1	26076-120452	BOLT, 10.912X 45	1	1						
15	1	26076-160552	BOLT, 10.916X 55	4	4						
16	1	172B03-67910	MOUNT ASSY,B CABIN		1						

N:Old $\xleftarrow[\text{No}]{\text{Yes}}$ New, Q:Old $\xleftarrow[\text{Yes}]{\text{No}}$ New, R:Old $\xleftarrow[\text{Yes}]{\text{Yes}}$ New, S:Old $\xleftarrow[\text{No}]{\text{No}}$ New, W:Add, Z:Discontinued, F:Interchangeable by set, K:Q'ty Change

Copyright (C) YANMAR CO., LTD. All RightsReserved.

Fig.79. WINDOW WASHER

(A)=VIO35-6A P(US)
(B)=VIO35-6A C(US)
(C)=
(D)=
(E)=
(F)=

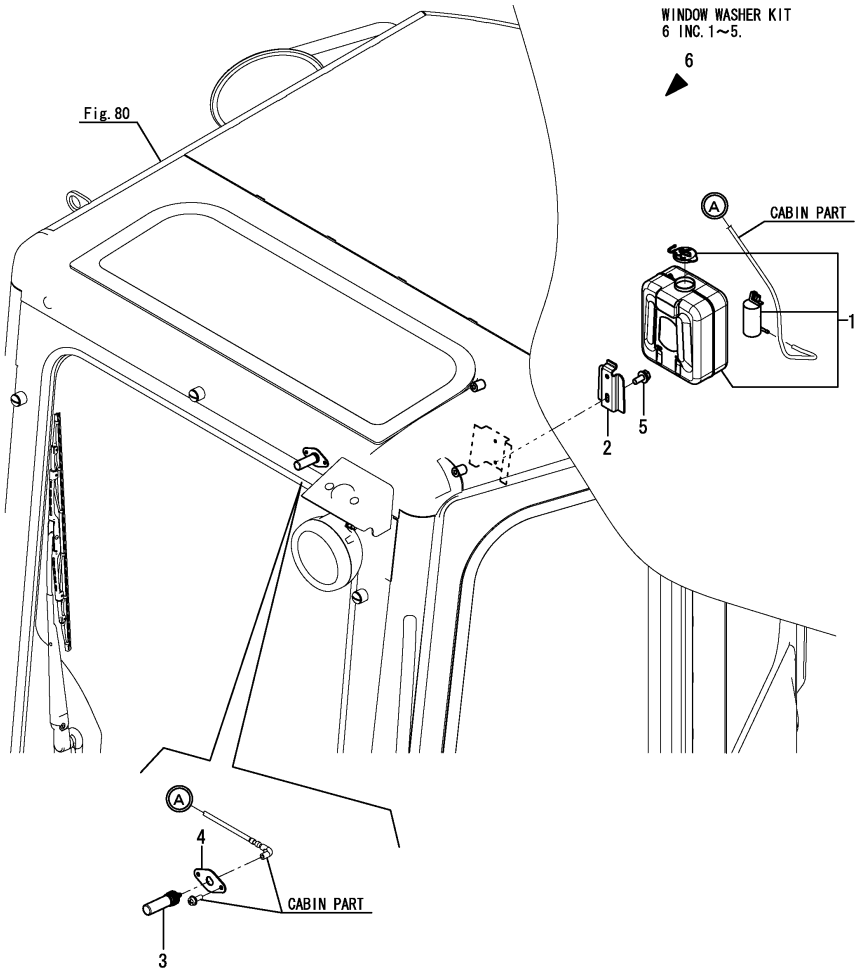

No.	Lev.	Parts No.	Description	Q'ty (A)	(B)	(C)	(D)	(E)	(F)	I	R
1	1	172472-17611	TANK ASSY, WASHER		1						
2	1	120147-44810	BRACKET		1						
3	1	172538-66510	NOZZLE, WASHER		1						
4	1	172B02-67910	PLATE, NOZZLE		1						
5	1	26014-060162	BOLT, M6X 16		2						
6	1	172B02-08100	TANK KIT,WASHER		1					W	1

(B=MXXXXX)

Remarks
(1)Refer No.6 includes No.5 from No.1.

N:Old $\frac{\text{Yes}}{\text{No}}$ New, Q:Old $\frac{\text{No}}{\text{Yes}}$ New, R:Old $\frac{\text{Yes}}{\text{Yes}}$ New, S:Old $\frac{\text{No}}{\text{No}}$ New, W:Add, Z:Discontinued, F:Interchangeable by set, K:Q'ty Change

Copyright (C) YANMAR CO., LTD. All RightsReserved.

Fig.80. CABIN(BODY)

(A)=VIO35-6A P(US)
(B)=VIO35-6A C(US)
(C)=
(D)=
(E)=
(F)=

CABIN ASSY
Fig. 80 Ref. No. 1
INC. Fig. 140～147.

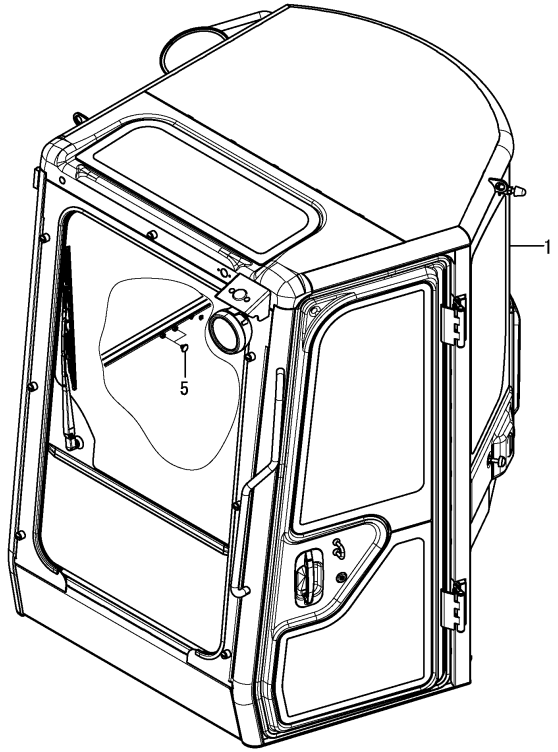

No.	Lev.	Parts No.	Description	Q'ty (A)	(B)	(C)	(D)	(E)	(F)	I	R
1	1	172B02-68000	CABIN ASSY		1						1
1-1	1	172B02-68001	CABIN ASSY		1					N	1
		(B=MZZZZZ)									
1-2	1	172B02-68002	CABIN ASSY		1					R	1
		(B=*2014.06)									
4A	1	172437-03391	LABEL, RADIATOR		1						2
4B	1	172437-03551	LABEL, WINDOW US		1						2
5	1	172444-17660	CLIP, TREE		2						3

Remarks
(1)Attach the No.4A & 4B label to this part.
(2)Label is not illustrated.
(3)Not applied for quick coupler specification.

N:Old $\xleftrightarrow[\text{No}]{\text{Yes}}$ New, Q:Old $\xleftrightarrow[\text{Yes}]{\text{No}}$ New, R:Old $\xleftrightarrow[\text{Yes}]{\text{Yes}}$ New, S:Old $\xleftrightarrow[\text{No}]{\text{No}}$ New, W:Add, Z:Discontinued, F:Interchangeable by set, K:Q'ty Change

Copyright (C) YANMAR CO., LTD. All RightsReserved.

Fig.140. (80A)CABIN(DOOR)(1)

(A)=VIO35-6A P(US)
(B)=VIO35-6A C(US)
(C)=
(D)=
(E)=
(F)=

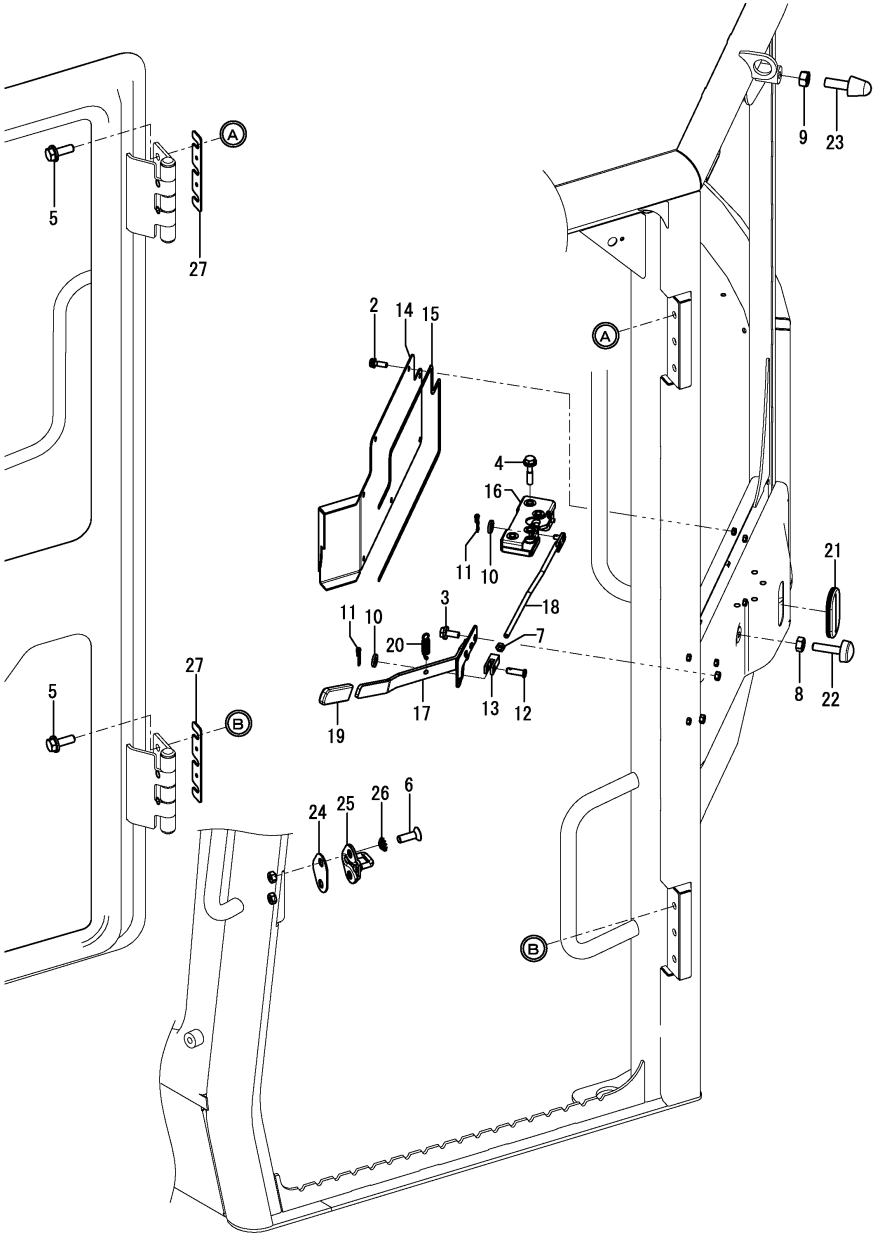

No.	Lev.	Parts No.	Description	Q'ty (A)	(B)	(C)	(D)	(E)	(F)	I	R
2	3	172B02-67100	SCREW, SEMS 5X16 B		7						
3	3	172B02-67160	BOLT, SEMS 6X16		2						
4	3	172B02-67180	BOLT, SEMS 6X30		4						
5	3	172B02-67210	BOLT, SEMS 8X20		6						
6	3	172B02-67390	SCREW, SOCKET 8X25		2						
7	3	172B02-67410	NUT, M6		1						
8	3	172B02-67430	NUT, M10		1						
9	3	172B02-67440	NUT, M12		1						
10	3	172B02-67550	WASHER, 6		2						
11	3	172B02-67620	PIN, SNAP 6		2						
12	3	172B02-67670	PIN, FLAT HEAD 6X20		1						
13	3	172B02-67710	YOKE, 6		1						
14	3	172B02-69610	COVER, CAB L		1						
15	3	172B02-69620	SEAL, COVER L		1						
16	3	172B02-69630	CATCH ASSY, DOOR		1						
17	3	172B02-69640	LEVER ASSY, DOOR		1						
18	3	172B02-69650	ROD ASSY, OPEN LOCK		1						
19	3	172B02-69660	COVER, LEVER		1						
20	3	172B02-69670	SPRING, LOCK LEVER		1						
21	3	172B02-69680	GROMMET, CATCH		1						
22	3	172B02-69690	STOPPER, DOOR		1						
23	3	172B02-69700	STOPPER, DOOR		1						
24	3	172B02-69850	SHIM, STRIKER DOOR		1						
25	3	172B02-69860	STRIKER, DOOR		1						
26	3	172B02-69870	WASHER, TOOTHED LOCK		2						
27	3	172B02-69970	SHIM, HINGE DOOR		2						

Remarks
* Cabin assy is shown in Fig.80.

N:Old $\xleftrightarrow[\text{No}]{\text{Yes}}$ New, Q:Old $\xleftrightarrow[\text{Yes}]{\text{No}}$ New, R:Old $\xleftrightarrow[\text{Yes}]{\text{Yes}}$ New, S:Old $\xleftrightarrow[\text{No}]{\text{No}}$ New, W:Add, Z:Discontinued, F:Interchangeable by set, K:Q'ty Change

Copyright (C) YANMAR CO., LTD. All RightsReserved.

Fig.141. (80B)CABIN(DOOR)(2)

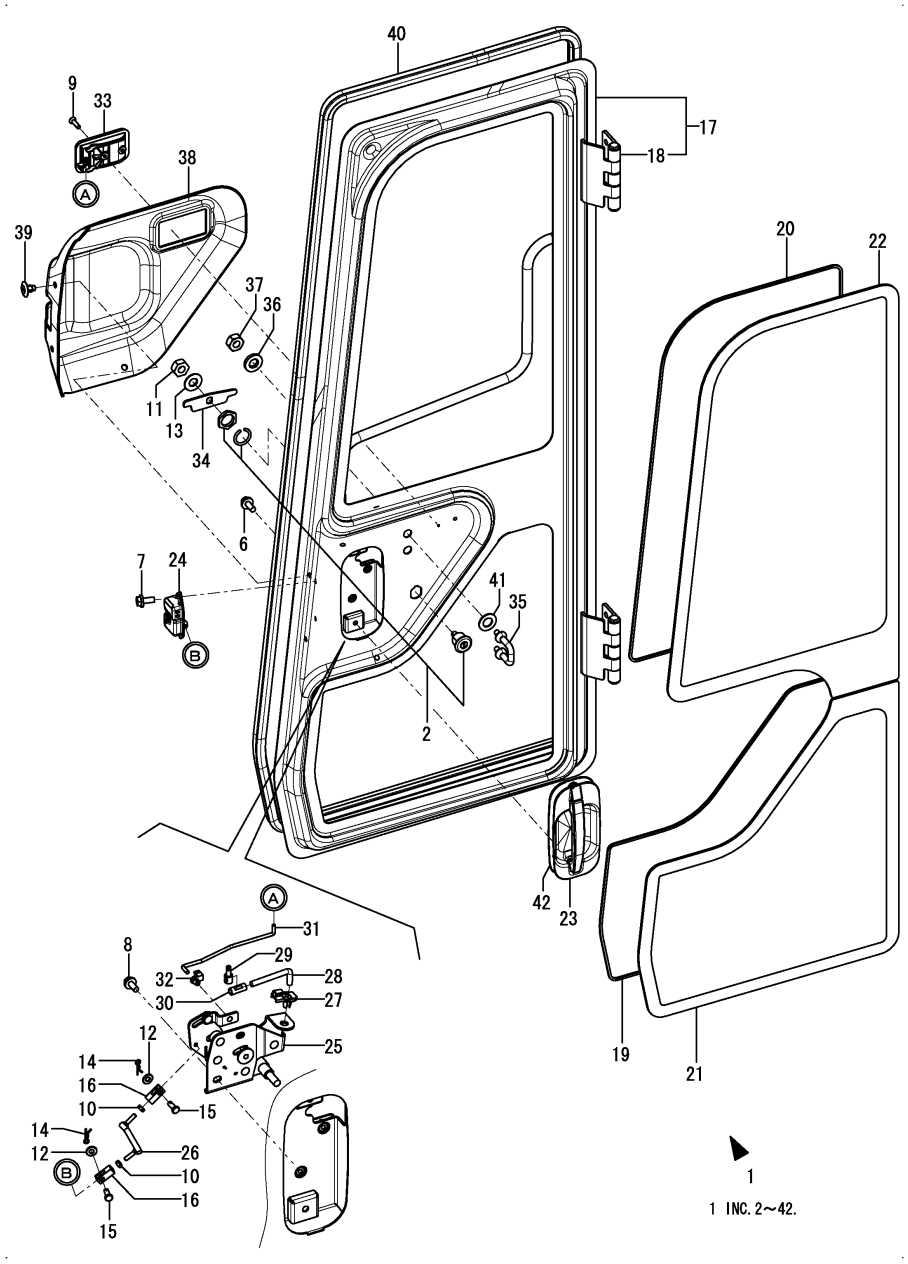

(A)=VIO35-6A P(US)
(B)=VIO35-6A C(US)
(C)=
(D)=
(E)=
(F)=

No.	Lev.	Parts No.	Description	Q'ty (A)	(B)	(C)	(D)	(E)	(F)	I	R
1	3	172B02-68200	DOOR ASSY, CABIN		1						
2	4	172B03-66170	CYLINDER ASSY, KEY		1						
6	4	172B02-67150	BOLT, SEMS 6X12		2						
7	4	172B02-67160	BOLT, SEMS 6X16		2						
8	4	172B02-67160	BOLT, SEMS 6X16		2						
9	4	172B02-67350	SCREW, FLAT 4X14 B		1						
10	4	172B02-67400	NUT, M4		2						
11	4	172B02-67430	NUT, M10		1						
12	4	172B02-67500	WASHER, 4		2						
13	4	172B02-67530	WASHER, 10		1						
14	4	172B02-67600	PIN, SNAP 4		2						
15	4	172B02-67650	PIN, FLAT HEAD 4X12		2						
16	4	172B02-67700	YOKE, 4		2						
17	4	172B02-68210	FRAME ASSY, DOOR		1						
18	5	172B02-68220	HINGE, DOOR		2						
19	4	172B02-68230	DAM, 1800		1						
20	4	172B02-68240	DAM, 2150		1						
21	4	172B02-68250	GLASS, DOOR LOW		1						
22	4	172B02-68260	GLASS, DOOR UP		1						
23	4	172B02-68270	HANDLE ASSY,OUTER		1						
24	4	172B02-68280	LOCK ASSY, DOOR		1						
25	4	172B02-68290	CONTROLLER ASSY,RMT		1						
26	4	172B02-68300	ROD ASSY, LINK LOCK		1						
27	4	172B02-68310	CLIP, ROD 6		1						
28	4	172B02-68320	ROD ASSY, LINK O/H		1						
29	4	172B02-68330	PIN, REGULATE		1						
30	4	172B02-68340	TUBE, ROD 6		1						
31	4	172B02-68350	ROD, LINK I/H-R/M		1						
32	4	172B02-68360	CLIP, ROD 3.5		1						
33	4	172B02-68370	HANDLE, DOOR INNER		1						
34	4	172B02-68380	PLATE, KEY LOCK DOOR		1						
35	4	172B02-68390	STRIKER ASSY, DOOR		1						
36	4	172B02-68400	WASHER, 10 BK		2						
37	4	172B02-68410	NUT, M10 BK		2						
38	4	172B02-68420	COVER, DOOR INNER		1						
39	4	172B02-68430	RIVET, 8		4						
40	4	172B02-68440	SEAL, DOOR		1						
41	4	172B02-68450	WASHER, SEAL 12		2						
42	4	172B02-69620	SEAL, COVER L		1						

Remarks
* Cabin assy is shown in Fig.80.

N:Old $\xleftrightarrow[\text{No}]{\text{Yes}}$ New, Q:Old $\xleftrightarrow[\text{Yes}]{\text{No}}$ New, R:Old $\xleftrightarrow[\text{Yes}]{\text{Yes}}$ New, S:Old $\xleftrightarrow[\text{No}]{\text{No}}$ New, W:Add, Z:Discontinued, F:Interchangeable by set, K:Q'ty Change

Copyright (C) YANMAR CO., LTD. All RightsReserved.

Fig.142. (80C)CABIN(FRONT WINDOW)(1)

(A)=VIO35-6A P(US)
(B)=VIO35-6A C(US)
(C)=
(D)=
(E)=
(F)=

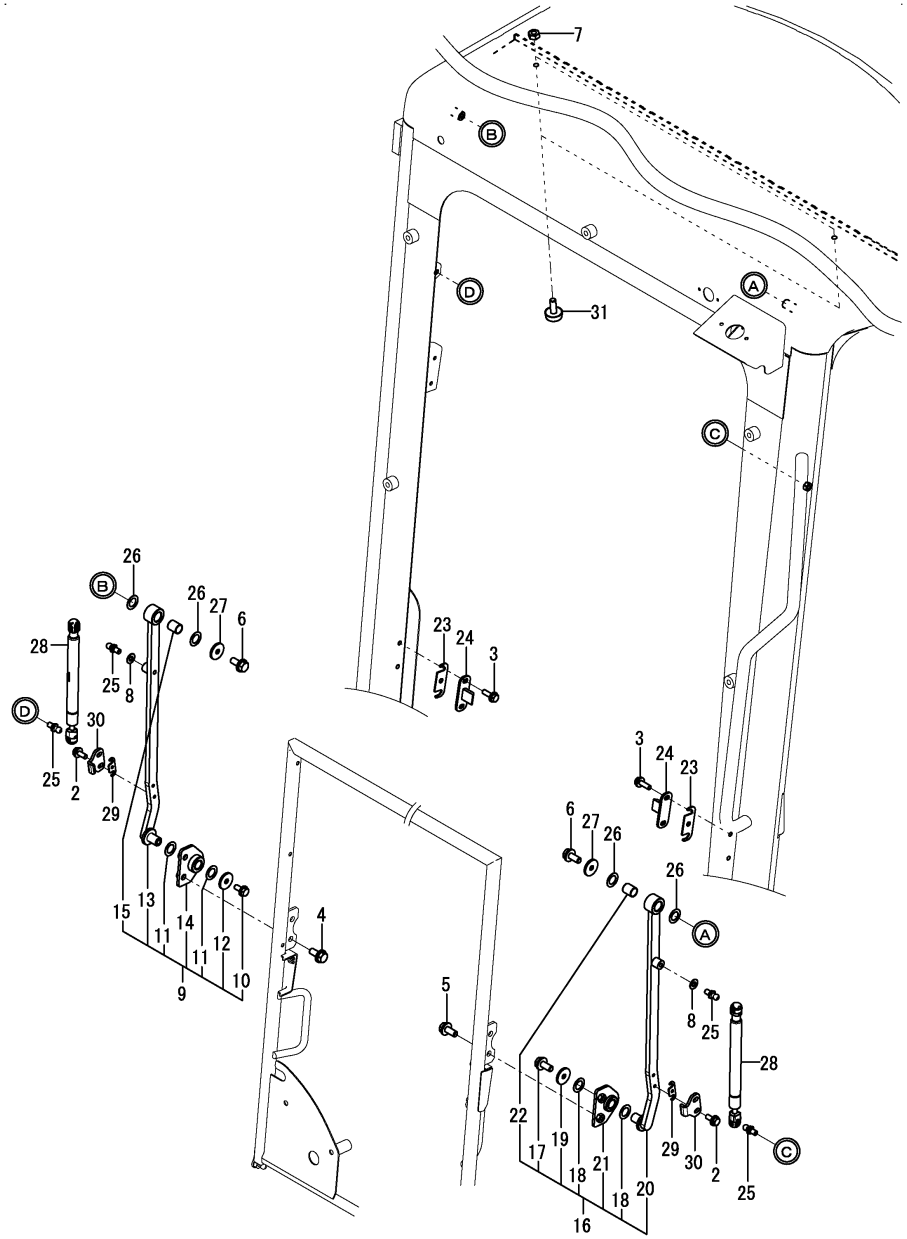

No.	Lev.	Parts No.	Description	Q'ty (A)	(B)	(C)	(D)	(E)	(F)	I	R
2	3	172B02-67250	BOLT, SEMS 6X16 B		4						
3	3	172B02-67260	BOLT, SEMS 6X20 B		4						
4	3	172B02-67280	BOLT, SEMS 8X20 B		2						
5	3	172B02-67280	BOLT, SEMS 8X20 B		2						
6	3	172B02-67280	BOLT, SEMS 8X20 B		2						
7	3	172B02-67430	NUT, M10		2						
8	3	172B02-67520	WASHER, 8		2						
9	3	172B02-69120	ARM ASSY, R F/W		1						
10	4	172B02-67280	BOLT, SEMS 8X20 B		1						
11	4	172B02-69170	WASHER, THRUST 16		2						
12	4	172B02-69180	WASHER, 8.5X30X3.2		1						
13	4	172B02-69260	ARM ASSY, R		1						
14	4	172B02-69280	BRACKET ASSY, ARM		1						
15	4	172B02-69290	BUSH, 17X20		1						
16	3	172B02-69130	ARM ASSY, L F/W		1						
17	4	172B02-67280	BOLT, SEMS 8X20 B		1						
18	4	172B02-69170	WASHER, THRUST 16		2						
19	4	172B02-69180	WASHER, 8.5X30X3.2		1						
20	4	172B02-69270	ARM ASSY, L		1						
21	4	172B02-69280	BRACKET ASSY, ARM		1						
22	4	172B02-69290	BUSH, 17X20		1						
23	3	172B02-69140	SHIM, LOCK PLATE		2						
24	3	172B02-69150	STRIKER ASSY, F/W		2						
25	3	172B02-69160	BALL, STUD		4						
26	3	172B02-69170	WASHER, THRUST 16		4						
27	3	172B02-69180	WASHER, 8.5X30X3.2		2						
28	3	172B02-69190	SPRING, GAS FRONT G		2						
29	3	172B02-69200	SHIM, STRIKER ARM		2						
30	3	172B02-69210	STRIKER, ARM		2						
31	3	172B02-69220	STOPPER, F/W		2						

Remarks
* Cabin assy is shown in Fig.80.

N:Old $\xleftarrow[\text{No}]{\text{Yes}}$ New, Q:Old $\xleftarrow[\text{Yes}]{\text{No}}$ New, R:Old $\xleftarrow[\text{Yes}]{\text{Yes}}$ New, S:Old $\xleftarrow[\text{No}]{\text{No}}$ New, W:Add, Z:Discontinued, F:Interchangeable by set, K:Q'ty Change

Copyright (C) YANMAR CO., LTD. All RightsReserved.

Fig.143. (80D)CABIN(FRONT WINDOW)(2)

(A)=VIO35-6A P(US)
(B)=VIO35-6A C(US)
(C)=
(D)=
(E)=
(F)=

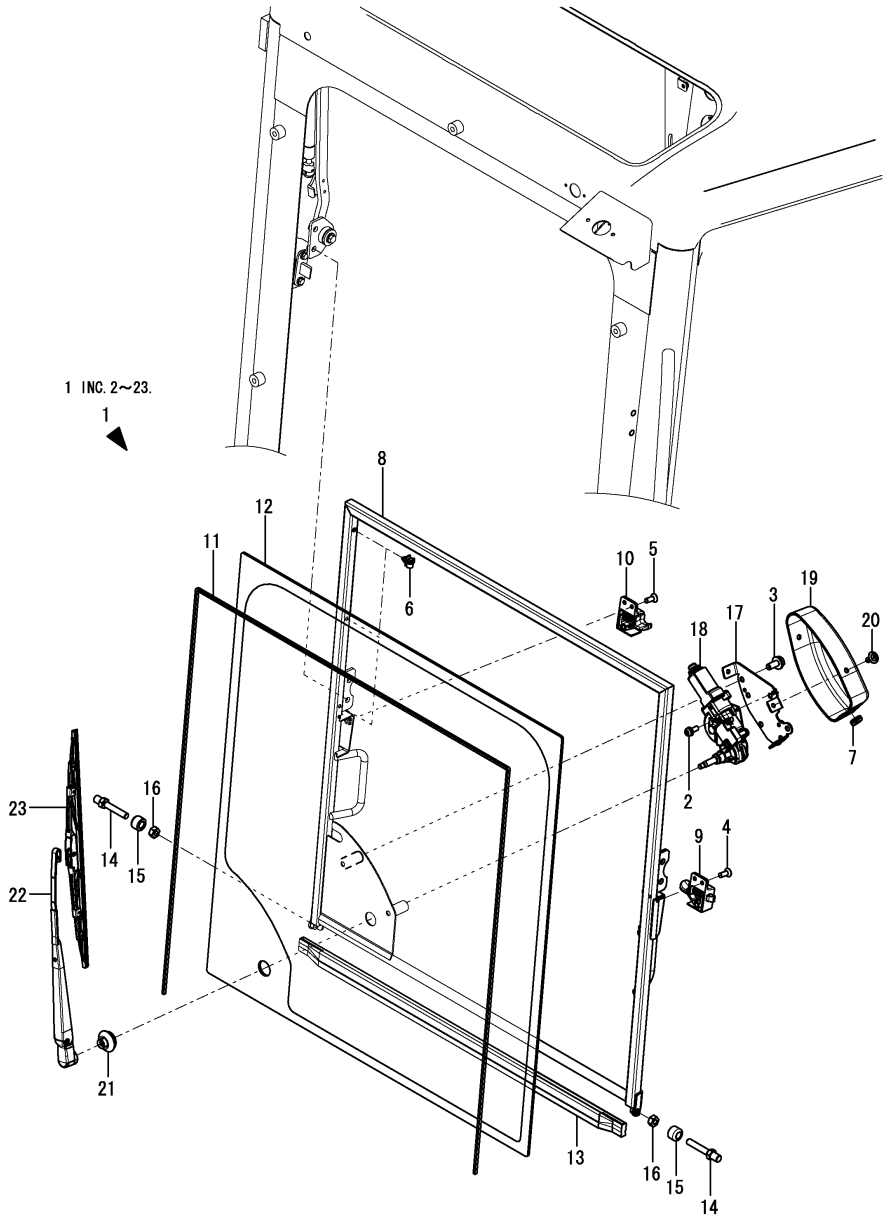

No.	Lev.	Parts No.	Description	Q'ty (A)	(B)	(C)	(D)	(E)	(F)	I	R
1	3	172B02-68500	WINDOW ASSY, FRONT		1						
2	4	172B02-67020	SCREW, SEMS 5X12		3						
3	4	172B02-67200	BOLT, SEMS 8X16		2						
4	4	172B02-67380	SCREW, SOCKET 6X16		2						
5	4	172B02-67380	SCREW, SOCKET 6X16		2						
6	4	172B02-67870	CLAMP, CABLE 5		3						
7	4	172B02-67950	CAP, 10		1						
8	4	172B02-68510	FRAME ASSY, FRONT		1						
9	4	172B02-68520	LOCK ASSY, L F/W		1						
10	4	172B02-68530	LOCK ASSY, R F/W		1						
11	4	172B02-68540	DAM, 2450		1						
12	4	172B02-68550	GLASS, FRONT UP		1						
13	4	172B02-68560	SEAL, FRONT GLASS		1						
14	4	172B02-68570	BOLT, ROLLER		2						
15	4	172B02-68580	ROLLER, 18X13		2						
16	4	172B02-68590	NUT, M8 BK		2						
17	4	172B02-68600	BRACKET ASSY,W-MOTOR		1						
18	4	172B02-68610	MOTOR, WIPER		1						
19	4	172B02-68620	COVER, WIPER MOTOR		1						
20	4	172B02-68630	RIVET, 7		3						
21	4	172B02-68640	CAP, WIPER		1						
22	4	172B02-68650	ARM, WIPER		1						
23	4	172B02-68660	BLADE, WIPER		1						

Remarks
* Cabin assy is shown in Fig.80.

N:Old $\frac{\text{Yes}}{\text{No}}$ New, Q:Old $\frac{\text{No}}{\text{Yes}}$ New, R:Old $\frac{\text{Yes}}{\text{Yes}}$ New, S:Old $\frac{\text{No}}{\text{No}}$ New, W:Add, Z:Discontinued, F:Interchangeable by set, K:Q'ty Change

Copyright (C) YANMAR CO., LTD. All RightsReserved.

Fig.144. (80E)CABIN(GLASS)

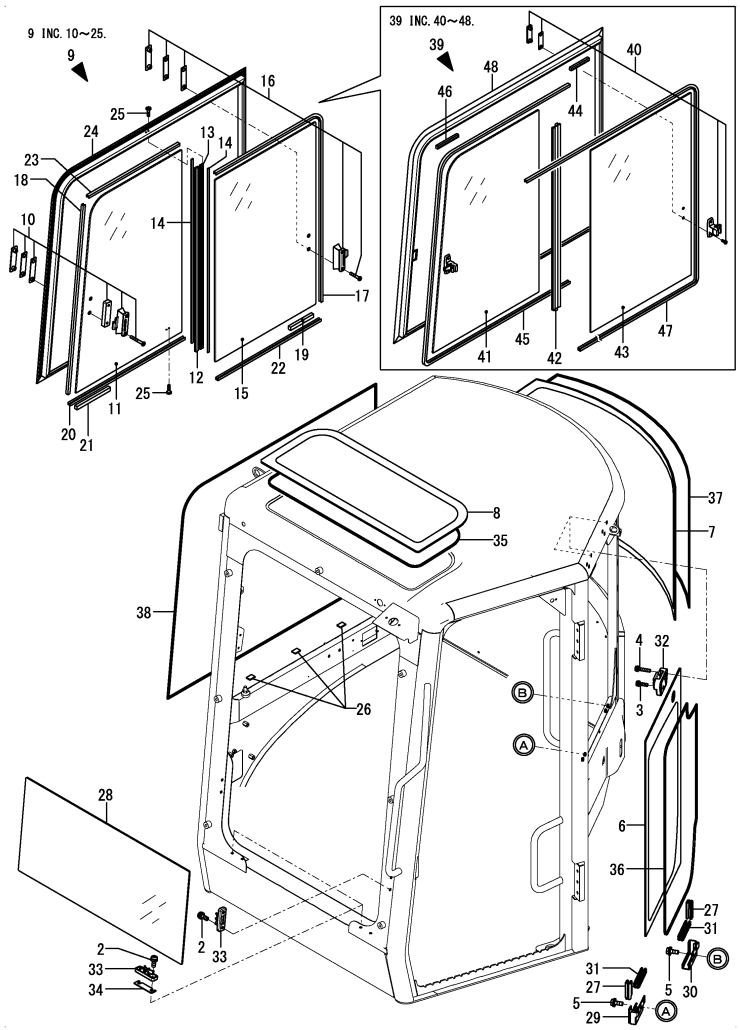

(A)=VIO35-6A P(US)
(B)=VIO35-6A C(US)
(C)=
(D)=
(E)=
(F)=

No.	Lev.	Parts No.	Description	Q'ty (A)	(B)	(C)	(D)	(E)	(F)	I	R
2	3	172B02-67060	SCREW, SEMS 6X16		8						
3	3	172B02-67120	SCREW, SEMS 6X20 B		2						
4	3	172B02-67140	SCREW, SEMS 6X30 B		4						
5	3	172B02-67250	BOLT, SEMS 6X16 B		4						
6	3	172B02-69230	GLASS, SIDE L		1						
7	3	172B02-69240	GLASS, REAR		1						1
8	3	172B02-69250	ROOF, POLYCARBONATE		1						
9	3	172B02-69300	SASH ASSY		1					Z	4
		(B=M61352)									
10	4	172B02-69310	LOCK ASSY, SASH 37		1					Z	
		(B=M61352)									
11	4	172B02-69320	GLASS, SASH FRONT		1					Z	
		(B=M61352)									
12	4	172B02-69330	RUBBER, SASH		1					Z	
		(B=M61352)									
13	4	172B02-69340	BAR, CENTER		1					Z	
		(B=M61352)									
14	4	172B02-69350	SEAL, SASH		2					Z	
		(B=M61352)									
15	4	172B02-69360	GLASS, SASH REAR		1					Z	2
		(B=M61352)									
16	4	172B02-69370	LOCK ASSY, SASH 26		1					Z	
		(B=M61352)									
17	4	172B02-69380	GLASSRUN, 1612		1					Z	
		(B=M61352)									
18	4	172B02-69390	GLASSRUN, 752		1					Z	
		(B=M61352)									
19	4	172B02-69400	STOPPER, SASH A		1					Z	
		(B=M61352)									
20	4	172B02-69410	GLASSRUN, 844		1					Z	
		(B=M61352)									
21	4	172B02-69420	STOPPER, SASH B		1					Z	
		(B=M61352)									
22	4	172B02-69430	GLASSRUN, 784		1					Z	
		(B=M61352)									
23	4	172B02-69440	GLASSRUN, 809		1					Z	
		(B=M61352)									
24	4	172B02-69450	FRAME ASSY, SASH		1					Z	
		(B=M61352)									
25	4	26557-030122	SCREW, M3X12		4					Z	
		(B=M61352)									
26	3	172B02-69460	SHEET, STOPPER		3						
27	3	172B02-69490	GLASSRUN, 40		2						
28	3	172B02-69500	GLASS, FRONT LOWER		1						
29	3	172B02-69510	HOLDER ASSY, GLASS R		1						
30	3	172B02-69520	HOLDER ASSY, GLASS L		1						
31	3	172B02-69530	GLASSRUN, 80		2						
32	3	172B02-69540	HOLDER, GLASS		2						
33	3	172B02-69550	SEAT, GLASS		4						
34	3	172B02-69560	SHIM, SEAT GLASS		2						
35	3	172B02-69570	DAM, 1900		1						

Remarks
* Cabin assy is shown in Fig.80.
(1)Standard blade specification:
Attach the No.49A label to this part.
Angle blade specification:
Attach the No.49B label to this part.
(2)Standard blade specification:
Attach the No.50A, 50B, 50C, 50D & 50E label to this part.
Angle blade specification:
Attach the No.50A, 50B, 50C, 50D, 50E & 50F label to this part.
(3)Label is not illustrated.
(4)Interchangeable by No.39.

N:Old $\xleftrightarrow[\text{No}]{\text{Yes}}$ New, Q:Old $\xleftrightarrow[\text{Yes}]{\text{No}}$ New, R:Old $\xleftrightarrow[\text{Yes}]{\text{Yes}}$ New, S:Old $\xleftrightarrow[\text{No}]{\text{No}}$ New, W:Add, Z:Discontinued, F:Interchangeable by set, K:Q'ty Change

++ CONTINUE ++

Copyright (C) YANMAR CO., LTD. All RightsReserved.

Fig.144. (80E)CABIN(GLASS)

(A)=VIO35-6A P(US)
(B)=VIO35-6A C(US)
(C)=
(D)=
(E)=
(F)=

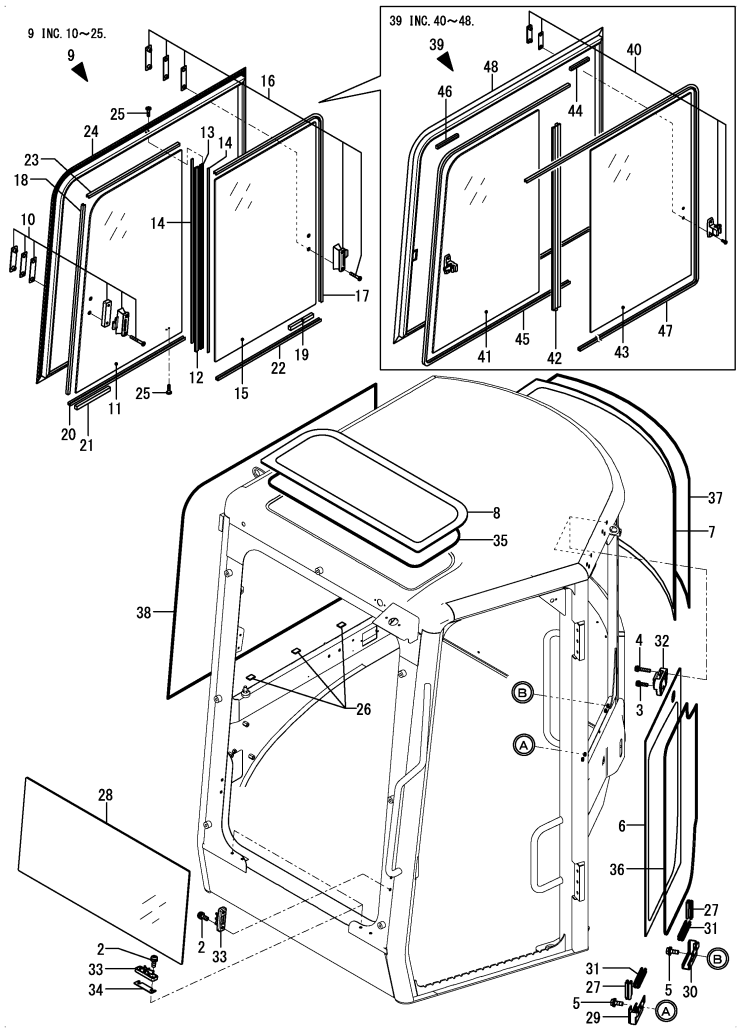

No.	Lev.	Parts No.	Description	Q'ty (A)	(B)	(C)	(D)	(E)	(F)	I	R
36	3	172B02-69580	DAM, 2300		1						
37	3	172B02-69590	DAM, 2900		1						
38	3	172B02-69600	DAM, 3550		1						
39	3	172B02-69301	SASH ASSY		1					W	
		(B=M61352)									
40	4	172B02-69311	LOCK ASSY, SASH 28		2						
41	4	172B02-69321	GLASS, SASH FRONT		1						
42	4	172B02-69351	SEAL, SASH		1						
43	4	172B02-69361	GLASS, SASH REAR		1						2
44	4	172B02-69401	STOPPER, SASH A		1						
45	4	172B02-69411	GLASSRUN, 2471		1						
46	4	172B02-69421	STOPPER, SASH B		1						
47	4	172B02-69431	GLASSRUN, 2500		1						
48	4	172B02-69451	FRAME ASSY, SASH		1						
49A	1	172B03-03480	LABEL,LIFT EX		1						3
49B	1	172B03-03680	LABEL,LIFT ANGLE		1						3
50A	1	172437-03343	LABEL, TRANSPORT		1						3
50B	1	172437-03372	LABEL, NEUTRAL		1						3
50C	1	172472-03241	LABEL, PINUS		1						3
50D	1	172B03-04400	LABEL,WARNING HITCH		1						3
50E	1	172B03-04410	LABEL,SAND US		1						3
50F	1	172A79-03220	LABEL,WARNING ANGLE		1						3

Remarks
* Cabin assy is shown in Fig.80.
(1)Standard blade specification:
Attach the No.49A label to this part.
Angle blade specification:
Attach the No.49B label to this part.
(2)Standard blade specification:
Attach the No.50A, 50B, 50C, 50D & 50E label to this part.
Angle blade specification:
Attach the No.50A, 50B, 50C, 50D, 50E & 50F label to this part.
(3)Label is not illustrated.
(4)Interchangeable by No.39.

N:Old ◄Yes/No► New, Q:Old ◄No/Yes► New, R:Old ◄Yes/Yes► New, S:Old ◄No/No► New, W:Add, Z:Discontinued, F:Interchangeable by set, K:Q'ty Change

Copyright (C) YANMAR CO., LTD. All RightsReserved.

Fig.145. (80F)CABIN(REAR COVER)

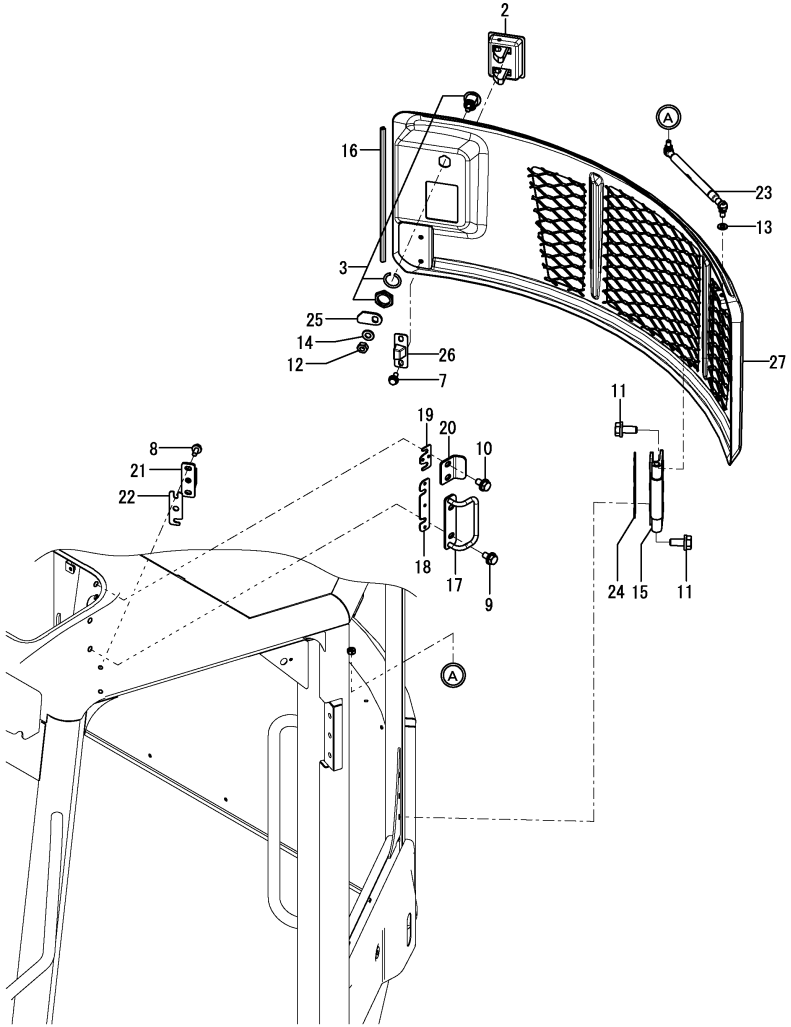

Remarks
* Cabin assy is shown in Fig.80.
(1)Attach the No.28A label to this part.
(2)Label is not illustrated.
(3)Color = DARK OLIVE GRAY.
(4)Color = BLACK.

(A)=VIO35-6A P(US) (D)=
(B)=VIO35-6A C(US) (E)=
(C)= (F)=

No.	Lev.	Parts No.	Description	Q'ty (A)	(B)	(C)	(D)	(E)	(F)	I	R
2	3	172187-61421	HANDLE,LOCK		1						3
2-1	3	172B02-69040	HANDLE,LOCK BLACK		1					S	4
		(B=MAF001)									
3	3	172B03-66170	CYLINDER ASSY, KEY		1						
7	3	172B02-67160	BOLT, SEMS 6X16		2						
8	3	172B02-67170	BOLT, SEMS 6X20		2						
9	3	172B02-67200	BOLT, SEMS 8X16		2						
10	3	172B02-67200	BOLT, SEMS 8X16		2						
11	3	172B02-67230	BOLT, SEMS 10X25		6						
12	3	172B02-67430	NUT, M10		1						
13	3	172B02-67520	WASHER, 8		1						
14	3	172B02-67530	WASHER, 10		1						
15	3	172527-68980	HINGE, DOOR		1						
16	3	172B02-69010	TRIM, REAR COVER		1						
17	3	172B02-69710	CATCH ASSY, COVER R		1						
18	3	172B02-69720	SHIM, CATCH R COVER		1						
19	3	172B02-69730	SHIM, LOCK PLATE		1						
20	3	172B02-69740	PLATE, LOCK		1						
21	3	172B02-69750	CATCH, DOVE TAIL B		1						
22	3	172B02-69760	SHIM, DOVE TAIL		1						
23	3	172B02-69770	SPRING, GAS REAR COV		1						
24	3	172B02-69780	SHIM, HINGE REAR		1						
25	3	172B02-69790	PLATE, KEY LOCK		1						
26	3	172B02-69800	CATCH, DOVE TAIL A		1						
27	3	172B02-69810	COVER ASSY, REAR		1						1
28A	1	172B03-03420	LABEL,WARNING A/C US		1						2

N:Old $\xleftarrow[\text{No}]{\text{Yes}}$ New, Q:Old $\xleftarrow[\text{Yes}]{\text{No}}$ New, R:Old $\xleftarrow[\text{Yes}]{\text{Yes}}$ New, S:Old $\xleftarrow[\text{No}]{\text{No}}$ New, W:Add, Z:Discontinued, F:Interchangeable by set, K:Q'ty Change

Copyright (C) YANMAR CO., LTD. All RightsReserved.

Fig.146. (80G)CABIN(ELECTRIC PARTS)

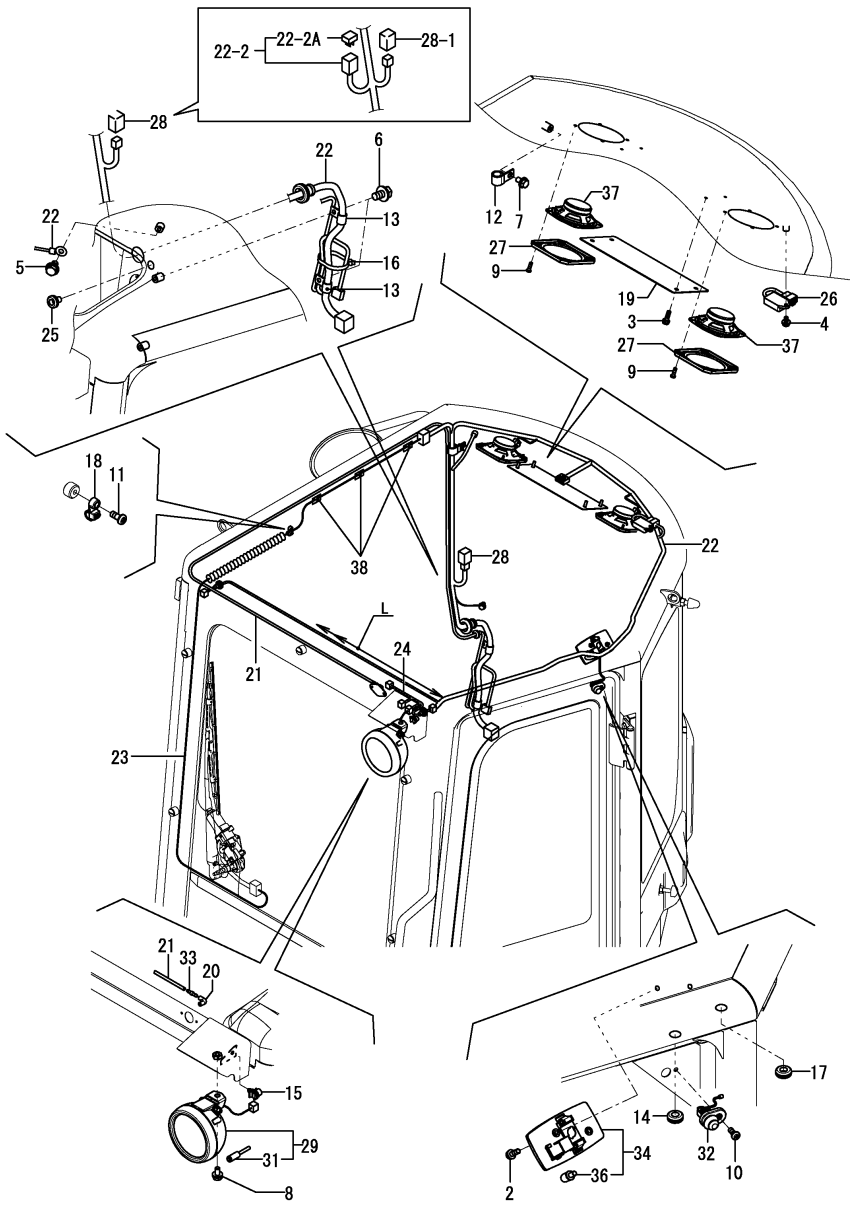

(A)=VIO35-6A P(US)
(B)=VIO35-6A C(US)
(C)=
(D)=
(E)=
(F)=

No.	Lev.	Parts No.	Description	Q'ty (A)	(B)	(C)	(D)	(E)	(F)	I	R
2	3	172B02-67040	SCREW, SEMS 5X16		2						
3	3	172B02-67120	SCREW, SEMS 6X20 B		4						
4	3	172B02-67150	BOLT, SEMS 6X12		1						
5	3	172B02-67190	BOLT, SEMS 8X12		1						
6	3	172B02-67200	BOLT, SEMS 8X16		2						
7	3	172B02-67200	BOLT, SEMS 8X16		1						
8	3	172B02-67290	BOLT, SEMS 10X20 B		1						
9	3	172B02-67300	SCREW, PAN 4X12 B		8						
10	3	172B02-67310	SCREW, PAN 5X12 B		1						
11	3	172B02-67310	SCREW, PAN 5X12 B		1						
12	3	172B02-67750	CLIP, HOSE 14		1						
13	3	172B02-67760	CLIP, HOSE 17		2						
14	3	172B02-67800	GROMMET, 10		1						
15	3	172B02-67850	CLAMP, CABLE 3		1						
16	3	172B02-67870	CLAMP, CABLE 5		1						
17	3	172B02-67950	CAP, 10		1						
18	3	172B02-68750	CLIP, HARNESS		1						
19	3	172B02-68820	COVER, RADIO LESS		1						
20	3	172B02-68850	JOINT, WASHER		1						
21	3	172B02-68860	HOSE, WASHER		1						
22	3	172B02-69100	HARNESS, CAB MAIN		1						
22-1	3	172B02-69101	HARNESS, CAB MAIN		1					S	1
		(B=MZZZZZ)									
22-2	3	172B02-69102	HARNESS, CAB MAIN		1					N	
		(B=*2014.06)									
22-2A	4	172648-16600	DIODE, 1.5-2P		1					W	
		(B=*2014.06)									
23	3	172B02-69110	HARNESS, WIPER MOTOR		1						
24	3	172B02-69980	HARNESS, WORK LAMP		1						
25	3	172B02-69990	GROMMET, 15X 21X 8		1						
26	3	128300-77920	TIMER		1						
27	3	1E9535-79420	COVER, SPEAKER		2						
28	3	1E6910-82500	RELAY, CA-1A		1						
28-1	3	172B02-17160	RELAY,CA A TYPE		1					S	2
		(B=*2014.06)									
29	3	1A7611-86251	LAMP, WORK F 55W		1						
31	4	1A7611-86270	BULB, 12V-55W		1						
32	3	198463-86440	SWITCH, DOOR LAMP		1						
33	3	198153-86670	VALVE, WASHER		1						
33-1	3	172B02-68870	VALVE, CHECK WASHER		1					R	
		(B=MZZZZZ)									
34	3	1A7470-86750	LAMP ASSY, ROOM		1						
36	4	1A7470-86770	BULB, 12V/5W		1						
37	3	1A8110-86920	SPEAKER		2						
38	3	933169-15231	STEP		3						

Remarks
* Cabin assy is shown in Fig.80.
(1)L=No.22 : 1,100mm, No.22-1 : 1,200mm.
(2)Body color = No.28 : RED, No.28-1 : BLACK.

N:Old ◄Yes/No► New, Q:Old ◄No/Yes► New, R:Old ◄Yes/Yes► New, S:Old ◄No/No► New, W:Add, Z:Discontinued, F:Interchangeable by set, K:Q'ty Change

Copyright (C) YANMAR CO., LTD. All RightsReserved.

Fig.147. (80H)CABIN(ACCESSORY)

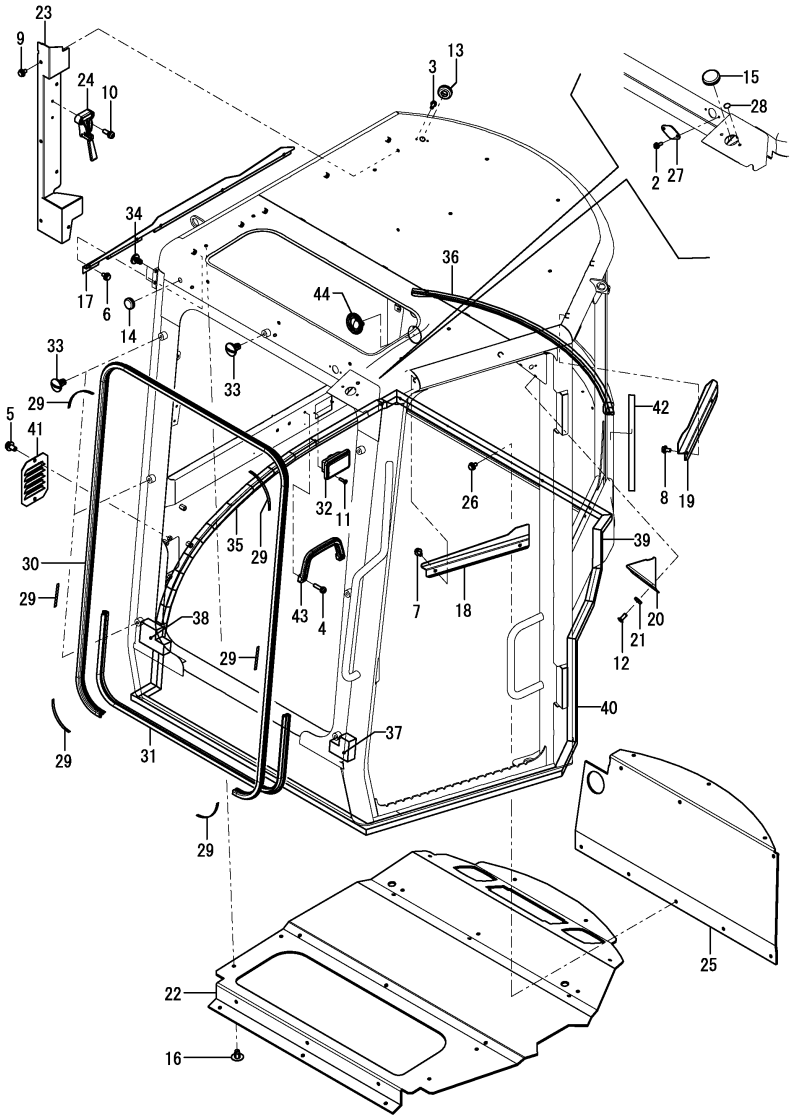

(A)=VIO35-6A P(US)
(B)=VIO35-6A C(US)
(C)=
(D)=
(E)=
(F)=

No.	Lev.	Parts No.	Description	Q'ty (A)	(B)	(C)	(D)	(E)	(F)	I	R
2	3	172B02-67080	SCREW, SEMS 4X12 B		2						
3	3	172B02-67090	SCREW, SEMS 4X16 B		2						
4	3	172B02-67130	SCREW, SEMS 6X25 B		2						
5	3	172B02-67200	BOLT, SEMS 8X16		2						
6	3	172B02-67240	BOLT, SEMS 6X12 B		5						
7	3	172B02-67240	BOLT, SEMS 6X12 B		2						
8	3	172B02-67240	BOLT, SEMS 6X12 B		2						
9	3	172B02-67240	BOLT, SEMS 6X12 B		6						
10	3	172B02-67320	SCREW, PAN 5X16 B		2						
11	3	172B02-67340	SCREW, FLAT 4X16		2						
12	3	172B02-67360	SCREW, ROUND 6X16		2						
13	3	172B02-67950	CAP, 10		1						
14	3	172B02-67950	CAP, 10		1						
14-1	3	172B02-67970	CAP, 16		1					S	
		(B=M60735)									
15	3	172B02-67960	CAP, 25		1						
16	3	172B02-68430	RIVET, 8		23						
17	3	172B02-68700	COVER, CAB TOP R		1						
18	3	172B02-68710	COVER, CAB TOP LF		1						
19	3	172B02-68720	COVER, CAB TOP LR		1						
20	3	172B02-68730	COVER, DOOR SWITCH		1						
21	3	172B02-68740	WASHER, 6 DRESSING		2						
22	3	172B02-68760	PAD, ROOF		1						
23	3	172B02-68780	COVER ASSY, HARNESS		1						1
24	3	172B02-68790	HAMMER		1						
25	3	172B02-68800	PAD, REAR		1						
26	3	172B02-68810	CLIP, TREE 6		11						
27	3	172B02-68840	PLATE, NOZZLE LESS		1						
28	3	172B02-68880	SEAL, 14 GRAY		2						
29	3	172B02-68890	TAPE, BUTYL		6						
30	3	172B02-69820	SEAL, 3450		1						
31	3	172B02-69830	SEAL, 1570		1						
32	3	172B02-69840	ASHTRAY		1						3
32-1	3	172B02-69841	ASHTRAY, BLACK		1					S	4
		(B=MAF001)									
33	3	172B02-69880	PLUG, M10		7						
34	3	172B02-69880	PLUG, M10		2						
35	3	172B02-69890	SEAL, CABIN 1360		1						
36	3	172B02-69900	SEAL, 950		1						
37	3	172B02-69910	SEAL, FRONT R		1						
38	3	172B02-69920	SEAL, FRONT L		1						
39	3	172B02-69930	SEAL, CABIN 500		1						
40	3	172B02-69940	SEAL, CABIN 430		1						
41	3	172B02-69950	LOUVER		1						
42	3	172B02-69960	TAPE, REAR COVER		1						
43	3	198094-82540	GRIP		1						3
43-1	3	172B02-69030	GRIP, BLACK		1					S	4
		(B=MAF001)									
44	3	198268-82820	VALVE, DOOR		1						
44-1	3	172B02-69020	GROMMET, VALVE		1					N	
		(B=M60830)									

Remarks
* Cabin assy is shown in Fig.80.
(1)Attach the No.45A & 45B label to this part.
(2)Label is not illustrated.
(3)Color = GRAY.
(4)Color = BLACK.

N:Old $\xleftrightarrow[\text{No}]{\text{Yes}}$ New, Q:Old $\xleftrightarrow[\text{Yes}]{\text{No}}$ New, R:Old $\xleftrightarrow[\text{Yes}]{\text{Yes}}$ New, S:Old $\xleftrightarrow[\text{No}]{\text{No}}$ New, W:Add, Z:Discontinued, F:Interchangeable by set, K:Q'ty Change

++ CONTINUE ++

Copyright (C) YANMAR CO., LTD. All RightsReserved.

Fig.147. (80H)CABIN(ACCESSORY)

(A)=VIO35-6A P(US)
(B)=VIO35-6A C(US)
(C)=
(D)=
(E)=
(F)=

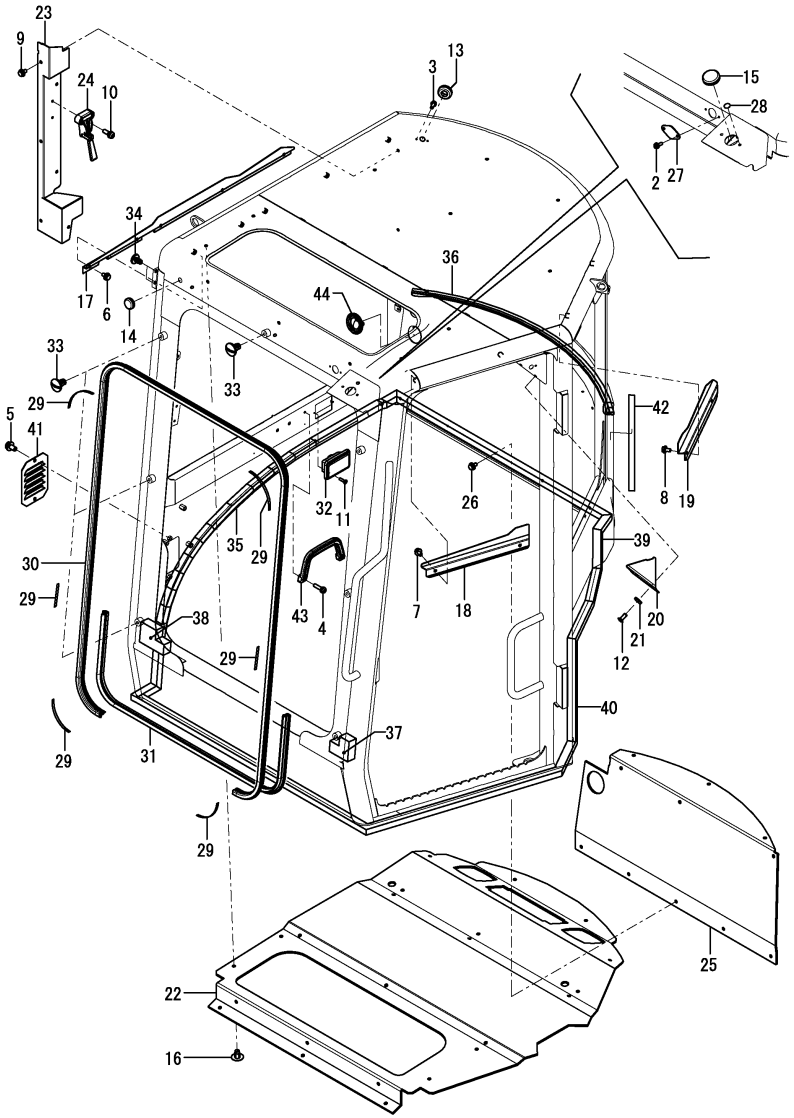

No.	Lev.	Parts No.	Description	Q'ty (A)	(B)	(C)	(D)	(E)	(F)	I	R
45A	1	172437-03451	LABEL, SEAT BELT		1						2
45B	1	172437-03441	LABEL, ROPS		1						2

Remarks
* Cabin assy is shown in Fig.80.
(1)Attach the No.45A & 45B label to this part.
(2)Label is not illustrated.
(3)Color = GRAY.
(4)Color = BLACK.

N:Old ◄Yes/No► New, Q:Old ◄No/Yes► New, R:Old ◄Yes/Yes► New, S:Old ◄No/No► New, W:Add, Z:Discontinued, F:Interchangeable by set, K:Q'ty Change

Copyright (C) YANMAR CO., LTD. All RightsReserved.

Fig.81. REARVIEW MIRROR

(A)=VIO35-6A P(US)
(B)=VIO35-6A C(US)
(C)=
(D)=
(E)=
(F)=

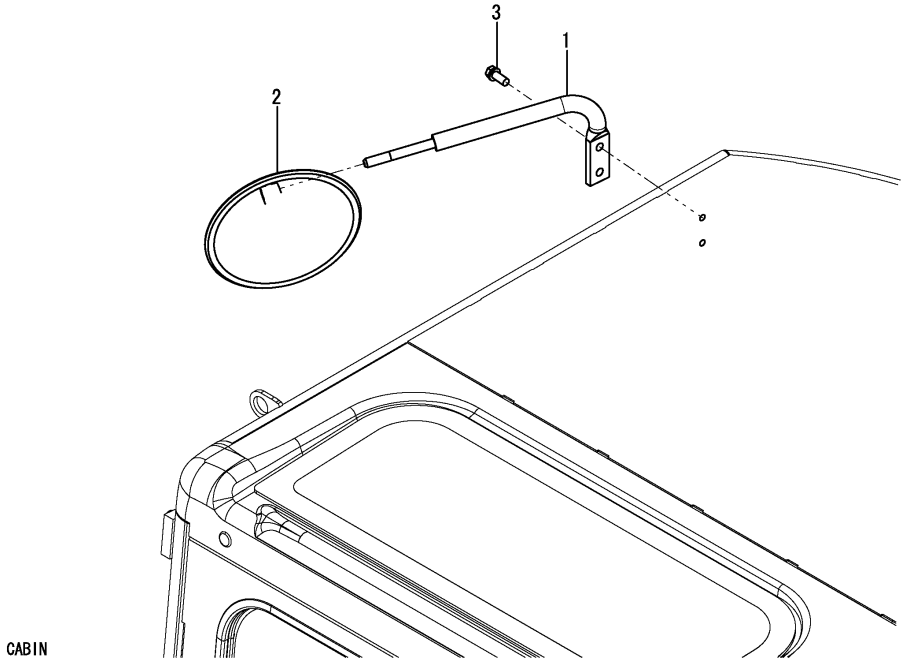

CANOPY

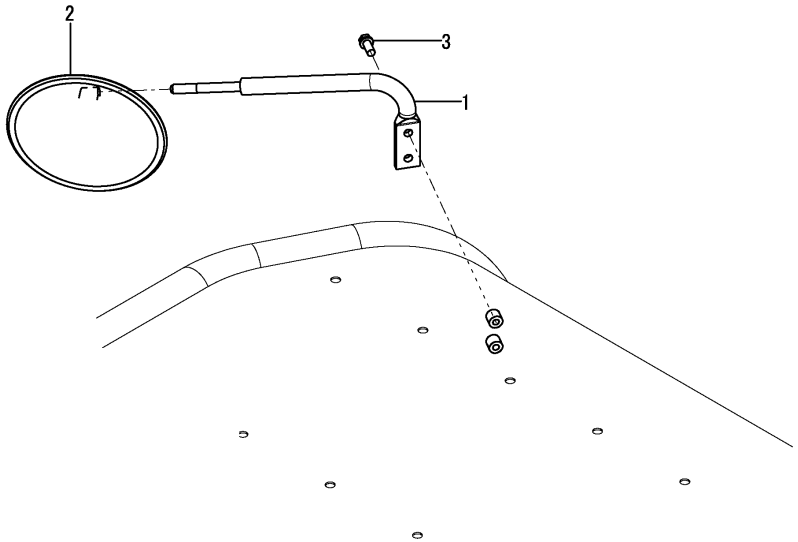

No.	Lev.	Parts No.	Description	Q'ty (A)	(B)	(C)	(D)	(E)	(F)	I	R
1	1	172A25-68301-2	BRACKET ASSY_MIRROR	1	1						
2	1	172A25-68500	MIRROR, REARVIEW	1	1						
3	1	26013-100252	BOLT, M10X 25	2	2						

N:Old $\frac{\text{Yes}}{\text{No}}$ New, Q:Old $\frac{\text{No}}{\text{Yes}}$ New, R:Old $\frac{\text{Yes}}{\text{Yes}}$ New, S:Old $\frac{\text{No}}{\text{No}}$ New, W:Add, Z:Discontinued, F:Interchangeable by set, K:Q'ty Change

Copyright (C) YANMAR CO., LTD. All RightsReserved.

Fig.82. MOUNT(CABIN)

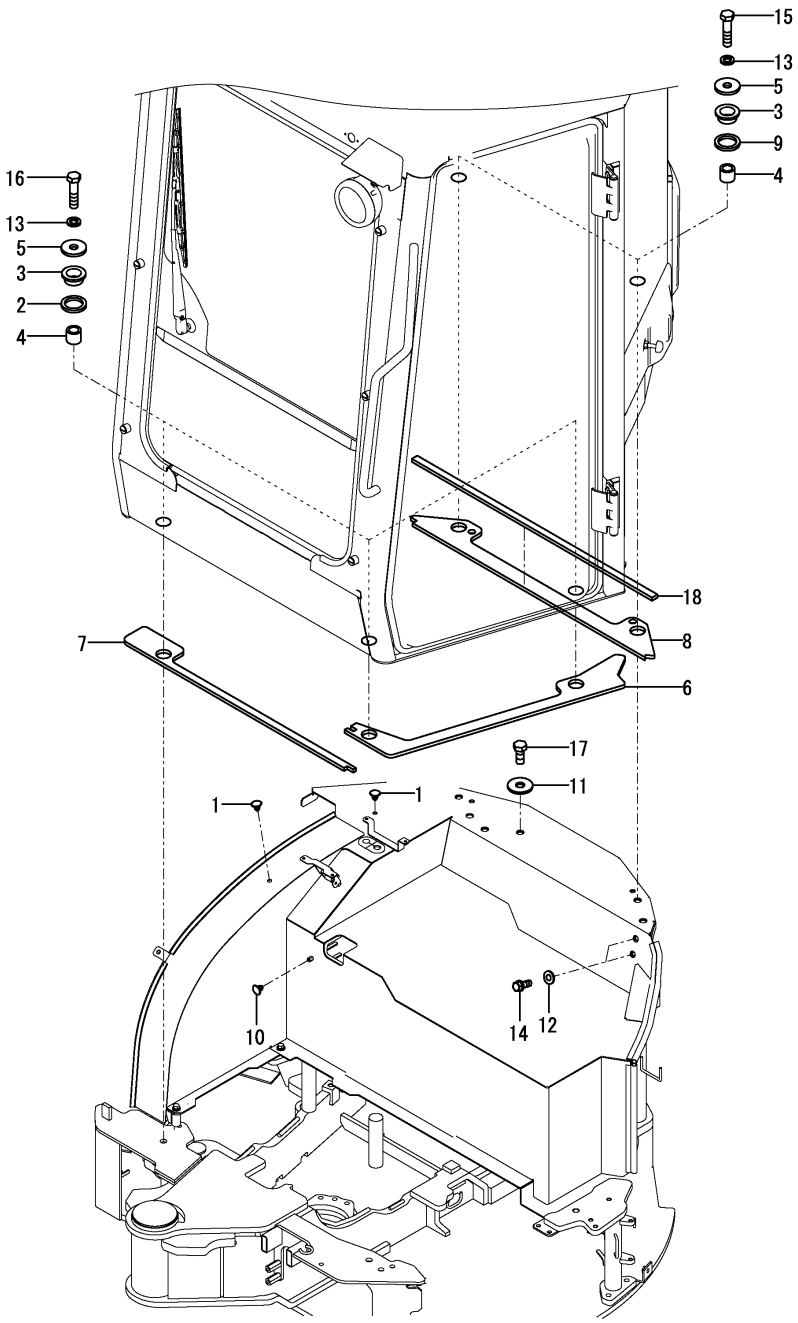

(A)=VIO35-6A P(US)
(B)=VIO35-6A C(US)
(C)=
(D)=
(E)=
(F)=

No.	Lev.	Parts No.	Description	Q'ty (A)	(B)	(C)	(D)	(E)	(F)	I	R
1	1	172122-17190	CLIP, TREE		2						
2	1	172A47-68860	WASHER		3						
3	1	172A47-68870	GROMMET		5						
4	1	172A47-68880	COLLAR		5						
5	1	172A47-68890	WASHER		5						
6	1	172B02-68900	PAD, CAB SIDE		1						
7	1	172B02-68910	PAD, CAB FRONT		1						
8	1	172B02-68920	PAD, CAB REAR		1						
9	1	172B02-68940	WASHER, 39X52X3.2		2						
10	1	183341-91800	CLIP, TREE 5		1						
11	1	22137-160000	WASHER, 16		1						
12	1	22157-100000	WASHER, 10		2						
13	1	22217-160000	WASHER, SPRING 16		5						
14	1	26013-100252	BOLT, SPRING M10X 25		2						
14-1	1	26013-100162	BOLT, SPRING M10X 16		2					N	
		(B=*2013.06.)									
15	1	26076-160552	BOLT, 10.916X 55		2						
16	1	26076-160702	BOLT, 10.916X 70		3						
17	1	26116-160302	BOLT, M16X 30 PLATED		1						
18	1	172B02-68930	SEAL, 10X20X880		1					W	
		(B=M62077)									

N:Old ◄Yes/No► New, Q:Old ◄No/Yes► New, R:Old ◄Yes/Yes► New, S:Old ◄No/No► New, W:Add, Z:Discontinued, F:Interchangeable by set, K:Q'ty Change

Copyright (C) YANMAR CO., LTD. All RightsReserved.

Fig.83. BOX(CABINE HEATER SPEC.)

(A)=VIO35-6A P(US)
(B)=VIO35-6A C(US)
(C)=
(D)=
(E)=
(F)=

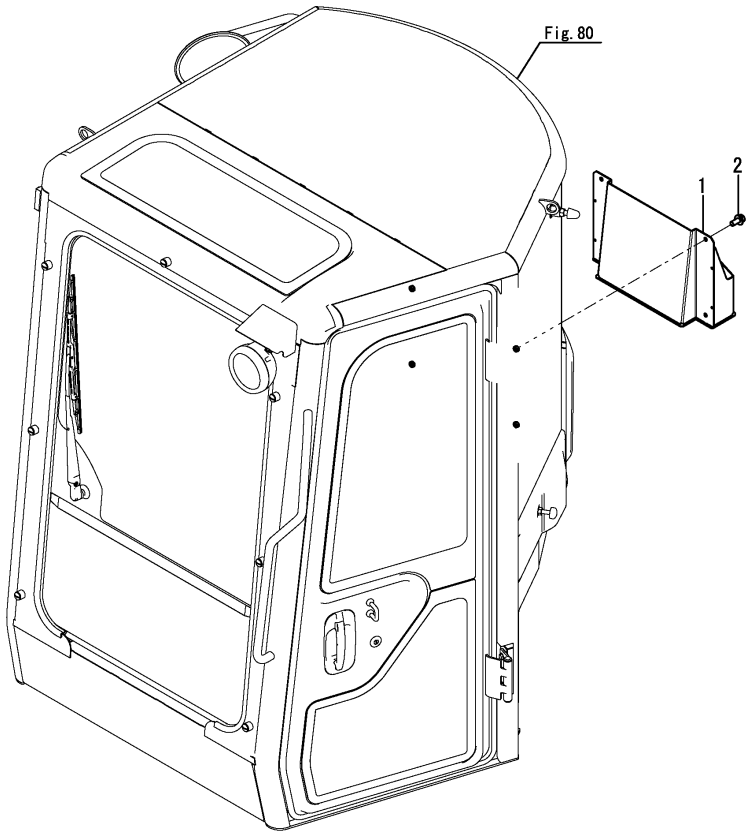

No.	Lev.	Parts No.	Description	Q'ty (A)	(B)	(C)	(D)	(E)	(F)	I	R
1	1	172B02-68950	BOX ASSY		1						
2	1	26014-080202	BOLT, M8X 20		4						

N:Old $\xleftrightarrow[\text{No}]{\text{Yes}}$ New, Q:Old $\xleftrightarrow[\text{Yes}]{\text{No}}$ New, R:Old $\xleftrightarrow[\text{Yes}]{\text{Yes}}$ New, S:Old $\xleftrightarrow[\text{No}]{\text{No}}$ New, W:Add, Z:Discontinued, F:Interchangeable by set, K:Q'ty Change

Copyright (C) YANMAR CO., LTD. All RightsReserved.

Fig.84. HYDRAULIC PUMP MOUNT

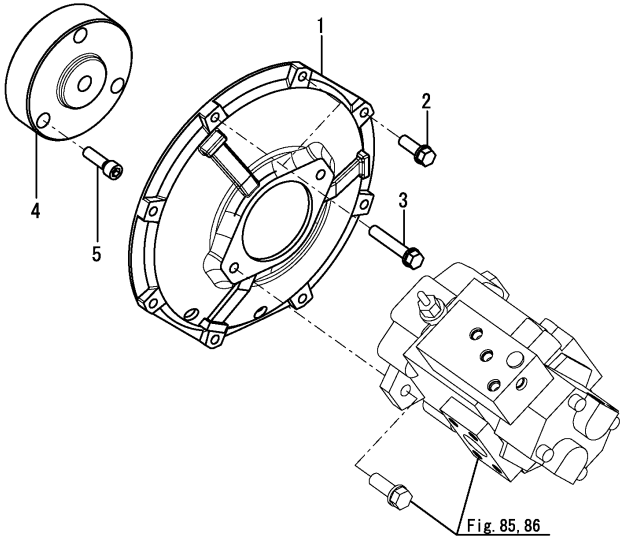

(A)=VIO35-6A P(US)
(B)=VIO35-6A C(US)
(C)=
(D)=
(E)=
(F)=

No.	Lev.	Parts No.	Description	Q'ty (A)	(B)	(C)	(D)	(E)	(F)	I	R
1	1	172168-71101-4	COVER, FLYWHEEL	1	1						
2	1	26013-100302	BOLT, M10X 30	6	6						
3	1	26013-100502	BOLT, M10X 50	2	2						
4	1	172165-71200	COUPLING	1	1						
5	1	26450-120402	BOLT, M12X 40	3	3						

N:Old $\overset{\text{Yes}}{\underset{\text{No}}{\leftrightarrows}}$ New, Q:Old $\overset{\text{No}}{\underset{\text{Yes}}{\leftrightarrows}}$ New, R:Old $\overset{\text{Yes}}{\underset{\text{Yes}}{\leftrightarrows}}$ New, S:Old $\overset{\text{No}}{\underset{\text{No}}{\leftrightarrows}}$ New, W:Add, Z:Discontinued, F:Interchangeable by set, K:Q'ty Change

Copyright (C) YANMAR CO., LTD. All RightsReserved.

Fig.85. HYDRAULIC PUMP(QUICK COUPLER SPEC.)

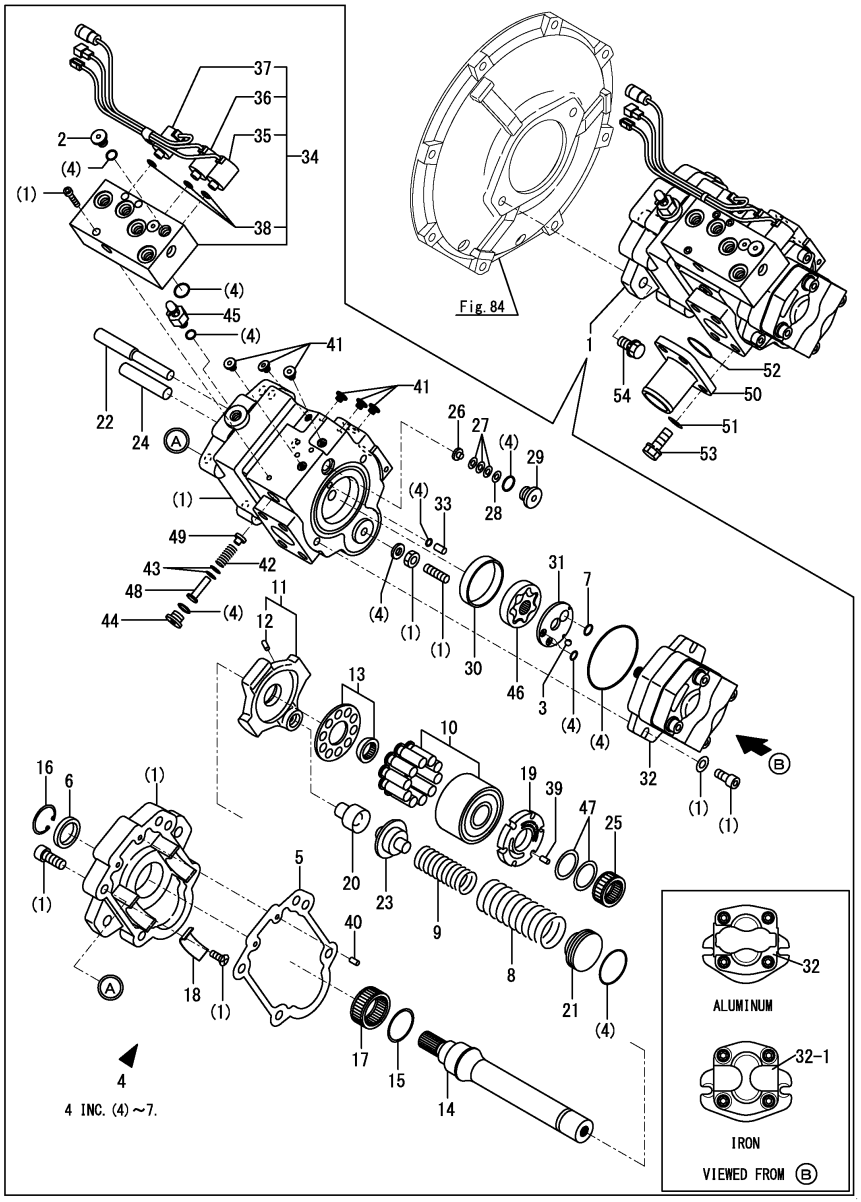

(A)=VIO35-6A P(US) (D)=
(B)=VIO35-6A C(US) (E)=
(C)= (F)=

No.	Lev.	Parts No.	Description	Q'ty (A)	(B)	(C)	(D)	(E)	(F)	I	R
1	1	172A46-73100	PUMP ASSY	1	1						
2	2	172148-70301	PLUG	1	1						
3	2	172122-70350	BALL, STEEL	1	1						
4	2	172460-73111	SEAL SET	1	1						
5	3	172460-73170	GASKET	1	1						
6	3	172460-73190	SEAL, OIL	1	1						
7	3	172460-73400	O-RING	1	1						
8	2	172461-73110	SPRING	1	1						
9	2	172A46-73110	SPRING	1	1						
10	2	172460-73121	BLOCK KIT, CYLINDER	1	1						
11	2	172A46-73120	PLATE, SWASH	1	1						
12	3	172312-74790	ORIFICE	1	1						
13	2	172460-73130	RETAINER KIT	1	1						
14	2	172460-73150	SHAFT	1	1						
15	2	172460-73160	WASHER, THRUST	1	1						
16	2	172460-73180	RING, SNAP	1	1						
17	2	172460-73200	BEARING, NEEDLE	1	1						
18	2	172460-73210	BUSH	2	2						
19	2	172460-73231	PLATE, VALVE	1	1						
20	2	172460-73240	HOLDER	1	1						
21	2	172461-73270	SEAT, SPRING	1	1						
22	2	172460-73280	PIN	1	1						
23	2	172176-73290	SEAT, SPRING	1	1						
24	2	172460-73290	PIN	1	1						
25	2	172460-73330	BEARING, NEEDLE	1	1						
26	2	172460-73340	STOPPER	1	1						
27	2	172460-73350	SPRING, DISK	3	3						
28	2	172460-73360	WASHER	1	1						
29	2	172460-73370	PLUG	1	1						
30	2	172460-73380	BUSH	1	1						
31	2	172460-73390	PLATE	1	1						
32	2	172460-73410	PUMP, GEAR	1	1						
32-1	2	172A46-73200	REPAIR KIT,GEAR PUMP	1	1					N	
	(A=FROM 1ST)	(B=FROM 1ST)									
33	2	172460-73420	PIN	1	1						
34	2	172960-73430	VALVE	1	1						
35	3	172460-73900	VALVE, SOLENOID	1	1						1
36	3	172460-73910	VALVE, SOLENOID	1	1						2
37	3	172460-73920	VALVE, SOLENOID	1	1						3
38	3	24352-190110	O-RING, 219011	3	3						
39	2	172122-73480	PIN	1	1						
40	2	172122-73480	PIN	2	2						
41	2	172452-73480	PLUG	6	6						
42	2	172176-73560	SPRING	1	1						
43	2	172176-73590	SHIM	2	2						
44	2	172176-73600	PLUG	1	1						
45	2	172176-73690	BREEDER, AIR	1	1						
46	2	172176-73880	PUMP ASSY, TROCHOID	1	1						
47	2	172176-73910	WASHER, THRUST	2	2						
48	2	172176-73930	PIN	1	1						
49	2	172176-73940	POPPET	1	1						

Remarks
(1)For safety lock.
(2)For second gear traveling.
(3)For quick coupler.

N:Old $\overset{\text{Yes}}{\underset{\text{No}}{\leftrightarrow}}$ New, Q:Old $\overset{\text{No}}{\underset{\text{Yes}}{\leftrightarrow}}$ New, R:Old $\overset{\text{Yes}}{\underset{\text{Yes}}{\leftrightarrow}}$ New, S:Old $\overset{\text{No}}{\underset{\text{No}}{\leftrightarrow}}$ New, W:Add, Z:Discontinued, F:Interchangeable by set, K:Q'ty Change

++ CONTINUE ++

Copyright (C) YANMAR CO., LTD. All RightsReserved.

Fig.85. HYDRAULIC PUMP(QUICK COUPLER SPEC.)

(A)=VIO35-6A P(US)
(B)=VIO35-6A C(US)
(C)=
(D)=
(E)=
(F)=

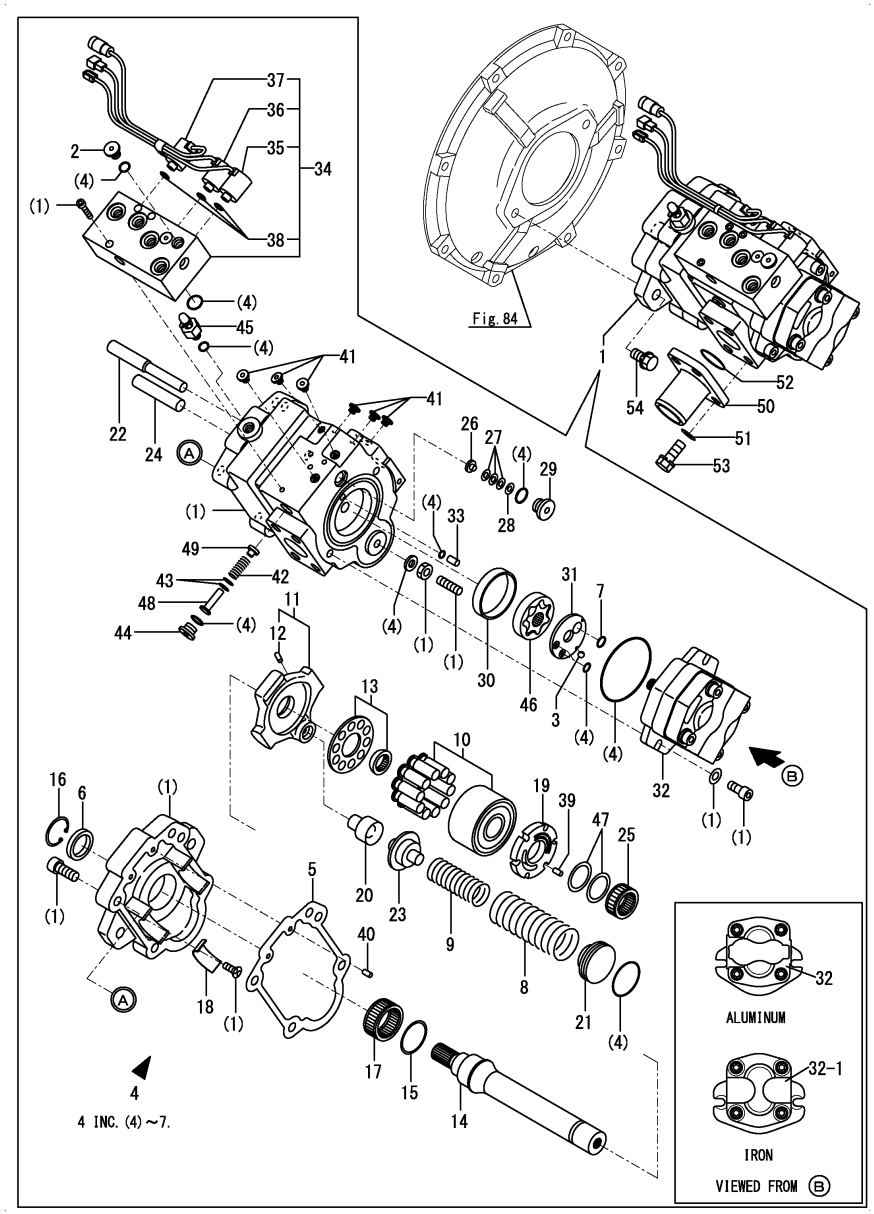

No.	Lev.	Parts No.	Description	Q'ty (A)	(B)	(C)	(D)	(E)	(F)	I	R
50	1	172165-76860	FLANGE	1	1						
51	1	22117-120000	WASHER, 12	4	4						
52	1	24321-000450	O-RING, 1AG45.0	1	1						
53	1	26013-120302	BOLT, SPRING M12X 30	4	4						
54	1	26013-120352	BOLT, SPRING M12X 35	2	2						

Remarks
(1)For safety lock.
(2)For second gear traveling.
(3)For quick coupler.

N:Old $\frac{\text{Yes}}{\text{No}}$ New, Q:Old $\frac{\text{No}}{\text{Yes}}$ New, R:Old $\frac{\text{Yes}}{\text{Yes}}$ New, S:Old $\frac{\text{No}}{\text{No}}$ New, W:Add, Z:Discontinued, F:Interchangeable by set, K:Q'ty Change

Copyright (C) YANMAR CO., LTD. All RightsReserved.

Fig.86. HYDRAULIC PUMP(ESS SPEC.)

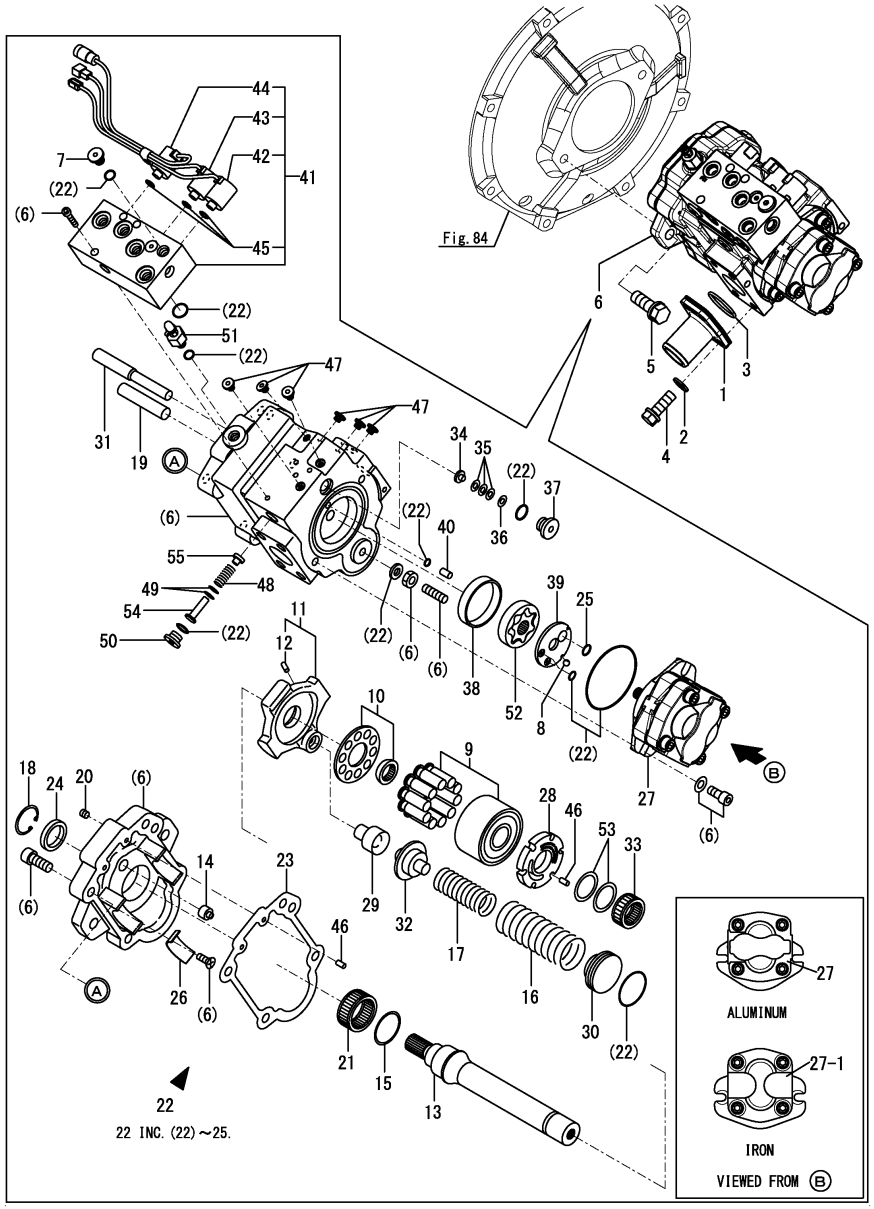

(A)=VIO35-6A P(US)
(B)=VIO35-6A C(US)
(C)=
(D)=
(E)=
(F)=

No.	Lev.	Parts No.	Description	Q'ty (A)	(B)	(C)	(D)	(E)	(F)	I	R
1	1	172165-76860	FLANGE		1						
2	1	22117-120000	WASHER, 12		4						
3	1	24321-000450	O-RING, 1AG45.0		1						
4	1	26013-120302	BOLT, SPRING M12X 30		4						
5	1	26013-120352	BOLT, SPRING M12X 35		2						
6	1	172B03-73100	PUMP ASSY,AIRCON		1						
7	2	172148-70301	PLUG		1						
8	2	172122-70350	BALL, STEEL		1						
9	2	172460-73121	BLOCK KIT, CYLINDER		1						
10	2	172460-73130	RETAINER KIT		1						
11	2	172460-73140	PLATE, SWASH		1						
12	3	172312-74790	ORIFICE		1						
13	2	172460-73150	SHAFT		1						
14	2	172B03-73150	STOPPER		1						
15	2	172460-73160	WASHER, THRUST		1						
16	2	172B03-73160	SPRING		1						
17	2	172B03-73170	SPRING		1						
18	2	172460-73180	RING, SNAP		1						
19	2	172B03-73180	PIN		1						
20	2	172B03-73190	PLUG, M5X0.8		2						
21	2	172460-73200	BEARING, NEEDLE		1						
22	2	172B03-73200	SEAL KIT, PUMP AC		1						
23	3	172460-73170	GASKET		1						
24	3	172460-73190	SEAL, OIL		1						
25	3	172460-73400	O-RING		1						
26	2	172460-73210	BUSH		2						
27	2	172B03-73210	PUMP ASSY, GEAR		1						
27-1	2	172B03-73211	PUMP ASSY, GEAR (B=M61043)		1					S	
28	2	172460-73231	PLATE, VALVE		1						
29	2	172460-73240	HOLDER		1						
30	2	172461-73270	SEAT, SPRING		1						
31	2	172460-73280	PIN		1						
32	2	172176-73290	SEAT, SPRING		1						
33	2	172460-73330	BEARING, NEEDLE		1						
34	2	172460-73340	STOPPER		1						
35	2	172460-73350	SPRING, DISK		3						
36	2	172460-73360	WASHER		1						
37	2	172460-73370	PLUG		1						
38	2	172460-73380	BUSH		1						
39	2	172460-73390	PLATE		1						
40	2	172460-73420	PIN		1						
41	2	172960-73431	VALVE, S/A		1						
42	3	172460-73900	VALVE, SOLENOID		1						1
43	3	172460-73910	VALVE, SOLENOID		1						2
44	3	172460-73920	VALVE, SOLENOID		1						3
45	3	24352-190110	O-RING, 219011		3						
46	2	172122-73480	PIN		5						
47	2	172452-73480	PLUG		6						
48	2	172176-73560	SPRING		1						
49	2	172176-73590	SHIM		2						

N:Old $\overset{\text{Yes}}{\underset{\text{No}}{\leftrightarrow}}$ New, Q:Old $\overset{\text{No}}{\underset{\text{Yes}}{\leftrightarrow}}$ New, R:Old $\overset{\text{Yes}}{\underset{\text{Yes}}{\leftrightarrow}}$ New, S:Old $\overset{\text{No}}{\underset{\text{No}}{\leftrightarrow}}$ New, W:Add, Z:Discontinued, F:Interchangeable by set, K:Q'ty Change

Remarks
(1)For safety lock.
(2)For second gear traveling.
(3)For quick coupler

++ CONTINUE ++

Copyright (C) YANMAR CO., LTD. All RightsReserved.

Fig.86. HYDRAULIC PUMP(ESS SPEC.)

(A)=VIO35-6A P(US) (D)=
(B)=VIO35-6A C(US) (E)=
(C)= (F)=

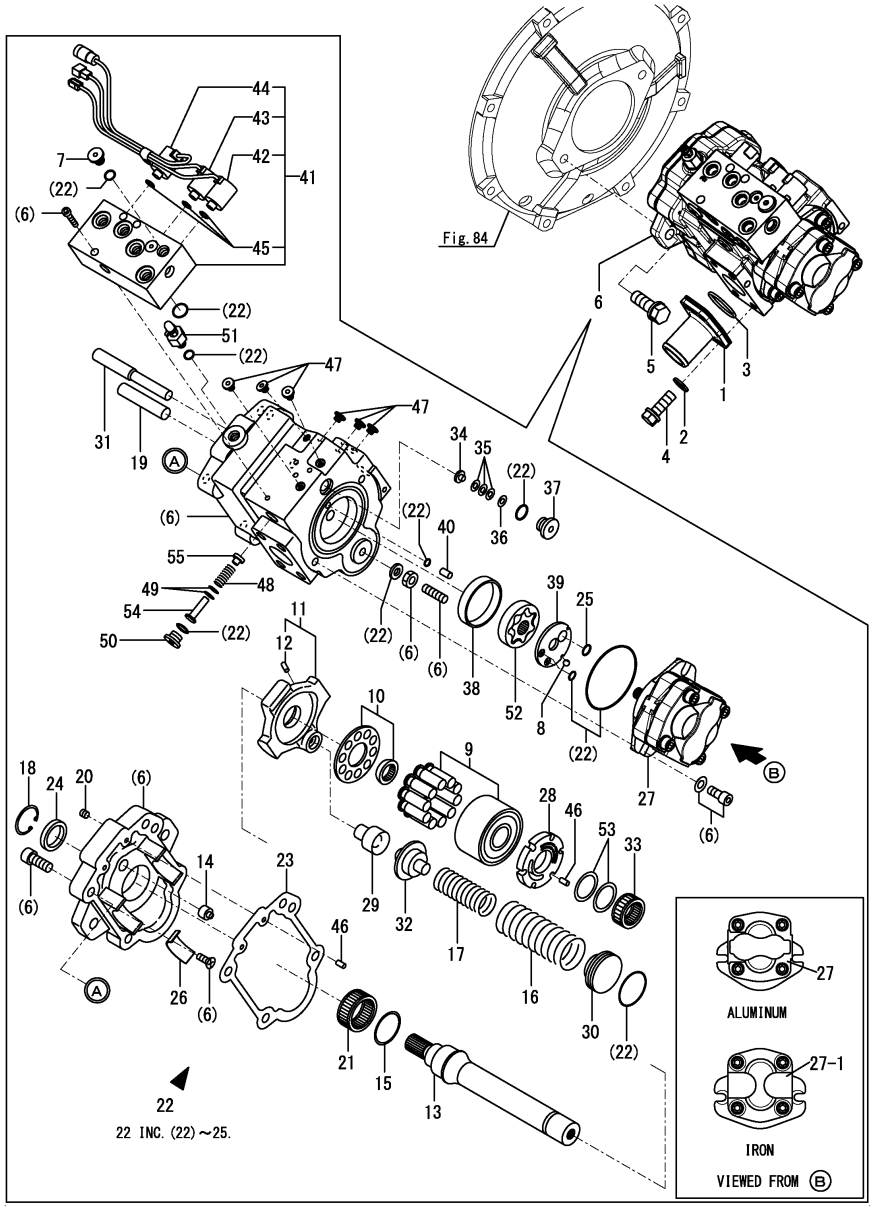

No.	Lev.	Parts No.	Description	Q'ty (A)	(B)	(C)	(D)	(E)	(F)	I	R
50	2	172176-73600	PLUG		1						
51	2	172176-73690	BREEDER, AIR		1						
52	2	172176-73880	PUMP ASSY, TROCHOID		1						
53	2	172176-73910	WASHER, THRUST		2						
54	2	172176-73930	PIN		1						
55	2	172176-73940	POPPET		1						

Remarks
(1)For safety lock.
(2)For second gear traveling.
(3)For quick coupler

N:Old $\frac{\text{Yes}}{\text{No}}$ New, Q:Old $\frac{\text{No}}{\text{Yes}}$ New, R:Old $\frac{\text{Yes}}{\text{Yes}}$ New, S:Old $\frac{\text{No}}{\text{No}}$ New, W:Add, Z:Discontinued, F:Interchangeable by set, K:Q'ty Change

Copyright (C) YANMAR CO., LTD. All RightsReserved.

Fig.160. (86A)HYDRAULIC PUMP(STANDARD SPEC.)

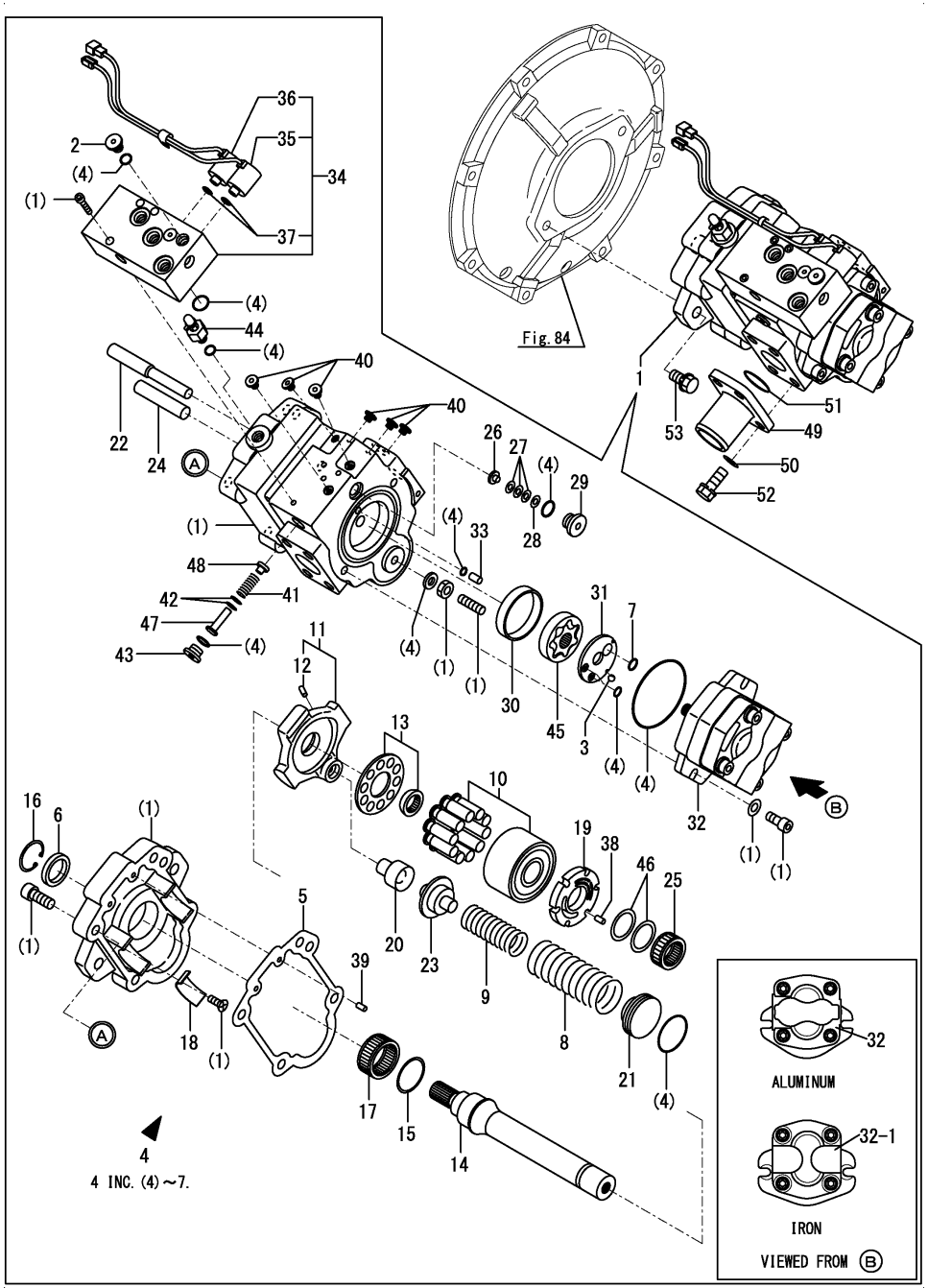

(A)=VIO35-6A P(US) (D)=
(B)=VIO35-6A C(US) (E)=
(C)= (F)=

No.	Lev.	Parts No.	Description	Q'ty (A)	(B)	(C)	(D)	(E)	(F)	I	R
1	1	172A51-73100	PUMP ASSY	1	1						
2	2	172148-70301	PLUG	1	1						
3	2	172122-70350	BALL, STEEL	1	1						
4	2	172460-73111	SEAL SET	1	1						
5	3	172460-73170	GASKET	1	1						
6	3	172460-73190	SEAL, OIL	1	1						
7	3	172460-73400	O-RING	1	1						
8	2	172461-73110	SPRING	1	1						
9	2	172A46-73110	SPRING	1	1						
10	2	172460-73121	BLOCK KIT, CYLINDER	1	1						
11	2	172A46-73120	PLATE, SWASH	1	1						
12	3	172312-74790	ORIFICE	1	1						
13	2	172460-73130	RETAINER KIT	1	1						
14	2	172460-73150	SHAFT	1	1						
15	2	172460-73160	WASHER, THRUST	1	1						
16	2	172460-73180	RING, SNAP	1	1						
17	2	172460-73200	BEARING, NEEDLE	1	1						
18	2	172460-73210	BUSH	2	2						
19	2	172460-73231	PLATE, VALVE	1	1						
20	2	172460-73240	HOLDER	1	1						
21	2	172461-73270	SEAT, SPRING	1	1						
22	2	172460-73280	PIN	1	1						
23	2	172176-73290	SEAT, SPRING	1	1						
24	2	172460-73290	PIN	1	1						
25	2	172460-73330	BEARING, NEEDLE	1	1						
26	2	172460-73340	STOPPER	1	1						
27	2	172460-73350	SPRING, DISK	3	3						
28	2	172460-73360	WASHER	1	1						
29	2	172460-73370	PLUG	1	1						
30	2	172460-73380	BUSH	1	1						
31	2	172460-73390	PLATE	1	1						
32	2	172460-73410	PUMP, GEAR	1	1						
32-1	2	172A46-73200	REPAIR KIT,GEAR PUMP	1	1						N
	(A=FROM 1ST)	(B=FROM 1ST)									
33	2	172460-73420	PIN	1	1						
34	2	172460-73431	VALVE, S/A	1	1						
35	3	172460-73900	VALVE, SOLENOID	1	1						
36	3	172460-73910	VALVE, SOLENOID	1	1						
37	3	24352-190110	O-RING, 219011	2	2						
38	2	172122-73480	PIN	1	1						
39	2	172122-73480	PIN	2	2						
40	2	172452-73480	PLUG	6	6						
41	2	172176-73560	SPRING	1	1						
42	2	172176-73590	SHIM	2	2						
43	2	172176-73600	PLUG	1	1						
44	2	172176-73690	BREEDER, AIR	1	1						
45	2	172176-73880	PUMP ASSY, TROCHOID	1	1						
46	2	172176-73910	WASHER, THRUST	2	2						
47	2	172176-73930	PIN	1	1						
48	2	172176-73940	POPPET	1	1						
49	1	172165-76860	FLANGE	1	1						

N:Old $\overset{\text{Yes}}{\underset{\text{No}}{\leftrightarrow}}$ New, Q:Old $\overset{\text{No}}{\underset{\text{Yes}}{\leftrightarrow}}$ New, R:Old $\overset{\text{Yes}}{\underset{\text{Yes}}{\leftrightarrow}}$ New, S:Old $\overset{\text{No}}{\underset{\text{No}}{\leftrightarrow}}$ New, W:Add, Z:Discontinued, F:Interchangeable by set, K:Q'ty Change

++ CONTINUE ++

Copyright (C) YANMAR CO., LTD. All RightsReserved.

Fig.160. (86A)HYDRAULIC PUMP(STANDARD SPEC.)

(A)=VIO35-6A P(US)
(B)=VIO35-6A C(US)
(C)=
(D)=
(E)=
(F)=

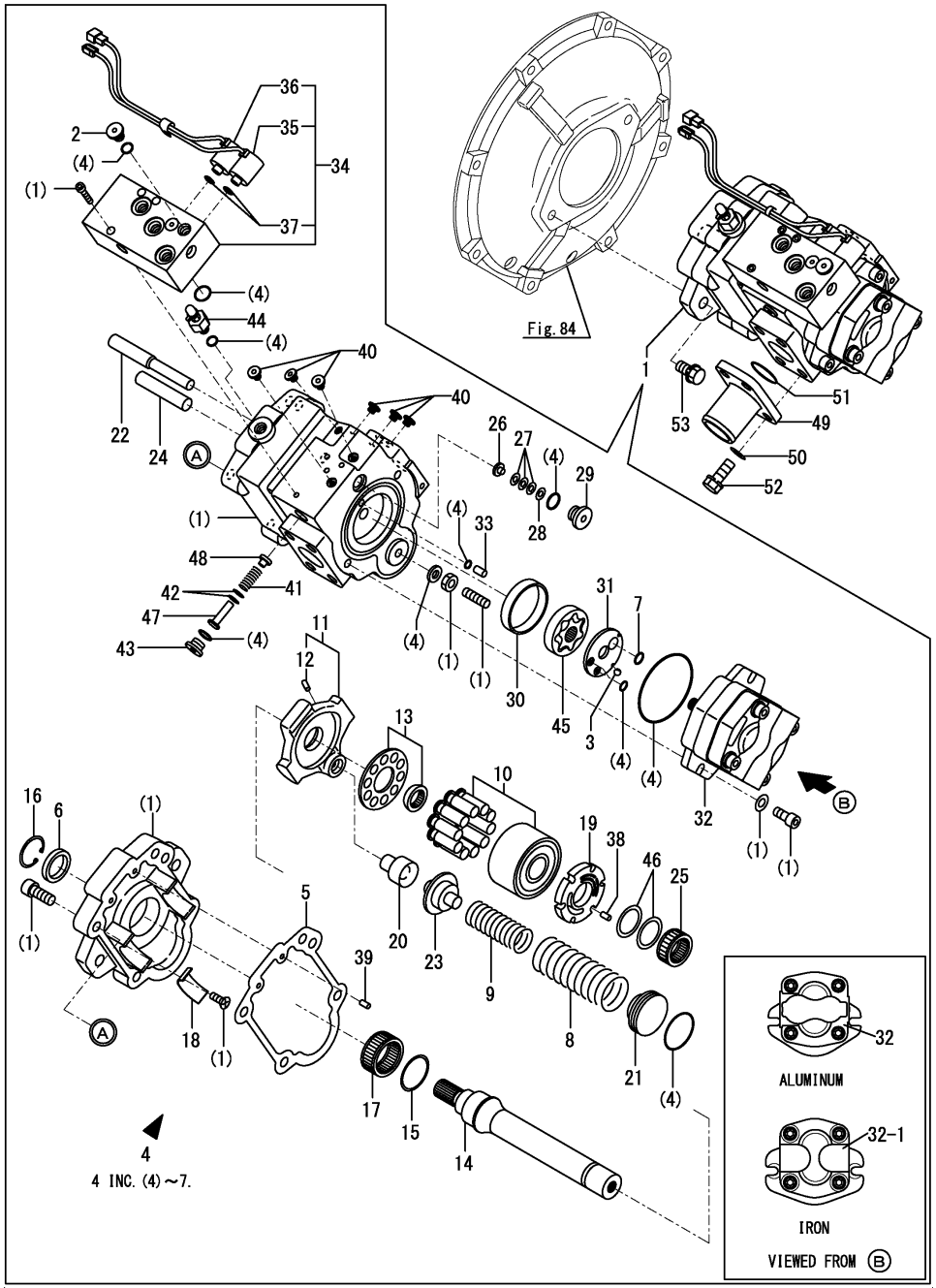

No.	Lev.	Parts No.	Description	Q'ty (A)	(B)	(C)	(D)	(E)	(F)	I	R
50	1	22117-120000	WASHER, 12	4	4						
51	1	24321-000450	O-RING, 1AG45.0	1	1						
52	1	26013-120302	BOLT, SPRING M12X 30	4	4						
53	1	26013-120352	BOLT, SPRING M12X 35	2	2						

N:Old ←Yes/No→ New, Q:Old ←No/Yes→ New, R:Old ←Yes/Yes→ New, S:Old ←No/No→ New, W:Add, Z:Discontinued, F:Interchangeable by set, K:Q'ty Change

Copyright (C) YANMAR CO., LTD. All RightsReserved.

Fig.87. BOOM CYLINDER(Y SPEC.)

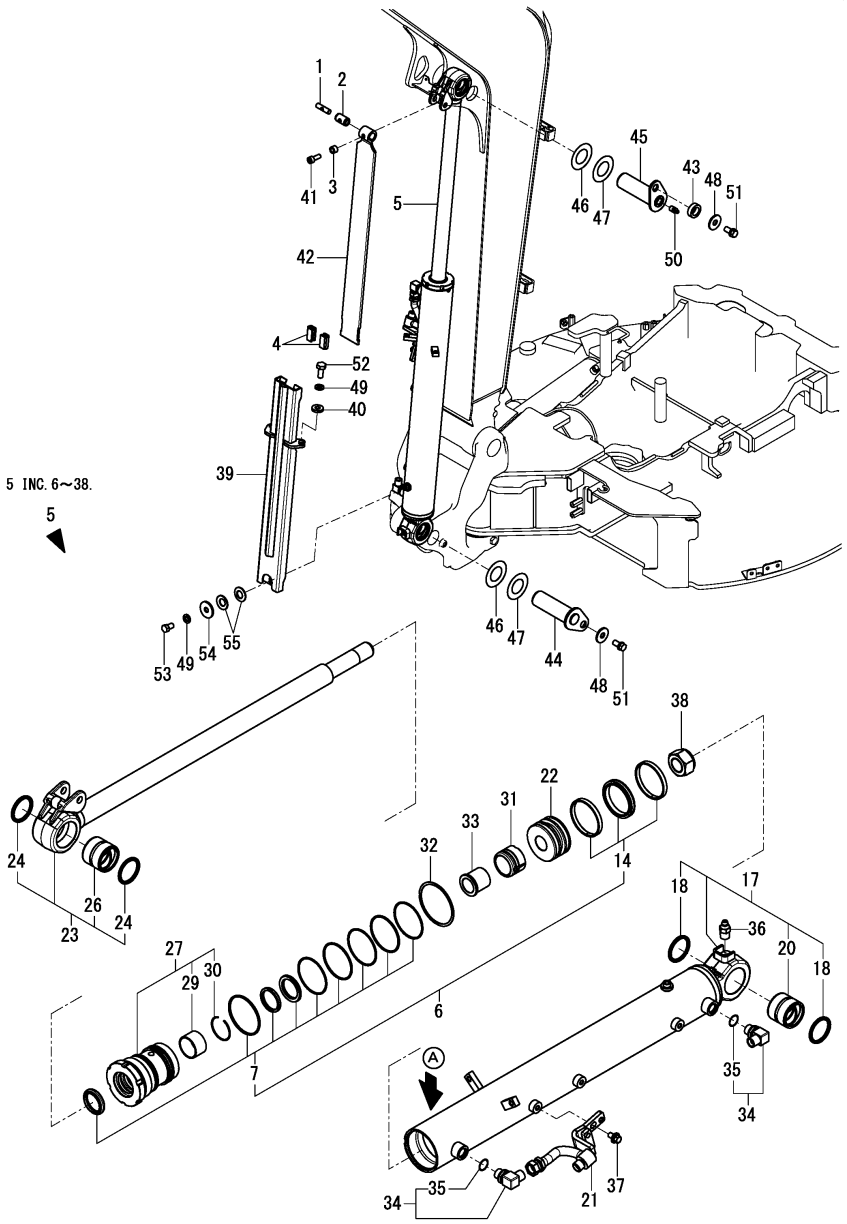

(A)=VIO35-6A P(US) (D)=
(B)=VIO35-6A C(US) (E)=
(C)= (F)=

No.	Lev.	Parts No.	Description	Q'ty (A)	(B)	(C)	(D)	(E)	(F)	I	R
1	1	172A23-72043	SHAFT	1	1						
2	1	172A23-72052	GROMMET	1	1						
3	1	172A46-72070	SPACER	1	1						
4	1	172A23-72081	GUIDE, SLIDE	2	2						
5	1	172B03-72101	CYLINDER ASSY, BOOM	1	1					Z	1
	(A=M61383)	(B=M61383)									
6	2	172B03-72010	SEAL SET, 85X45	1	1						
7	3	172B03-72020	SEAL SET, HEAD 85X45	1	1						
14	3	172B03-72270	SEAL SET, PISTON 85	1	1						
17	2	172B03-72111	TUBE ASSY, BOOM	1	1						
18	3	172448-54120	SEAL, DUST	2	2						
20	3	172B03-72291	BUSH, 50X60X50	1	1						
21	2	172B03-72151	PIPE ASSY, BOOM	1	1						
22	2	172B03-72180	PISTON, 85 33	1	1						
23	2	172B03-72200	ROD ASSY, BOOM	1	1						
24	3	172448-54120	SEAL, DUST	2	2						
26	3	172B03-72291	BUSH, 50X60X50	1	1						
27	2	172B03-72250	HEAD ASSY, 85 45	1	1						
29	3	24550-045300	BUSH, 45X30	1	1						
30	3	933111-26600	RING, SPRING	1	1						
31	2	172458-72260	PLUNGER, CUSHION	1	1						
32	2	172146-72270	WASHER, LOCK	1	1						
33	2	172458-72290	COLLAR, CUSHION	1	1						
34	2	172141-76900	CONNECTOR ASSY	2	2						
35	3	24315-000180	O-RING, 1BP18.0	2	2						
36	2	24761-020000	NIPPLE, GREASE PT1/8	1	1						
37	2	26013-100202	BOLT, M10X 20	1	1						
38	2	933111-20200	NUT	1	1						
39	1	172B03-72240	GUIDE ASSY, 747	1	1						
40	1	172A79-72570	WASHER	2	2						
41	1	172A47-72840	BOLT	1	1						
42	1	172A47-72881-N	PLATE, SLIDE	1	1						
43	1	172164-81670	SPACER	1	1						
44	1	172B03-81760	PIN ASSY,50X158 B	1	1						
45	1	172B03-81820	PIN ASSY,50X158 A	1	1						
46	1	172165-82520	SHIM	2	2						
47	1	172165-82530	SHIM	2	2						
48	1	22157-120000	WASHER, 12	2	2						
49	1	22217-100000	WASHER, SPRING 10	3	3						
50	1	24761-020000	NIPPLE, GREASE PT1/8	1	1						
51	1	26013-120252	BOLT, M12X 25	2	2						
52	1	26076-100252	BOLT, 10.910X 25	2	2						
53	1	26116-100162	BOLT, M10X 16 PLATED	1	1						
54	1	933147-03400	WASHER, BRAKE ARM	1	1						
55	1	933168-14170	SPRING	2	2						

Remarks
(1)A : no mark.
Replacement with Fig.191(87A) No1.

N:Old $\frac{\text{Yes}}{\text{No}}$ New, Q:Old $\frac{\text{No}}{\text{Yes}}$ New, R:Old $\frac{\text{Yes}}{\text{Yes}}$ New, S:Old $\frac{\text{No}}{\text{No}}$ New, W:Add, Z:Discontinued, F:Interchangeable by set, K:Q'ty Change

Copyright (C) YANMAR CO., LTD. All RightsReserved.

Fig.191. (87A)BOOM CYLINDER(K SPEC.)

(A)=VIO35-6A P(US) (D)=
(B)=VIO35-6A C(US) (E)=
(C)= (F)=

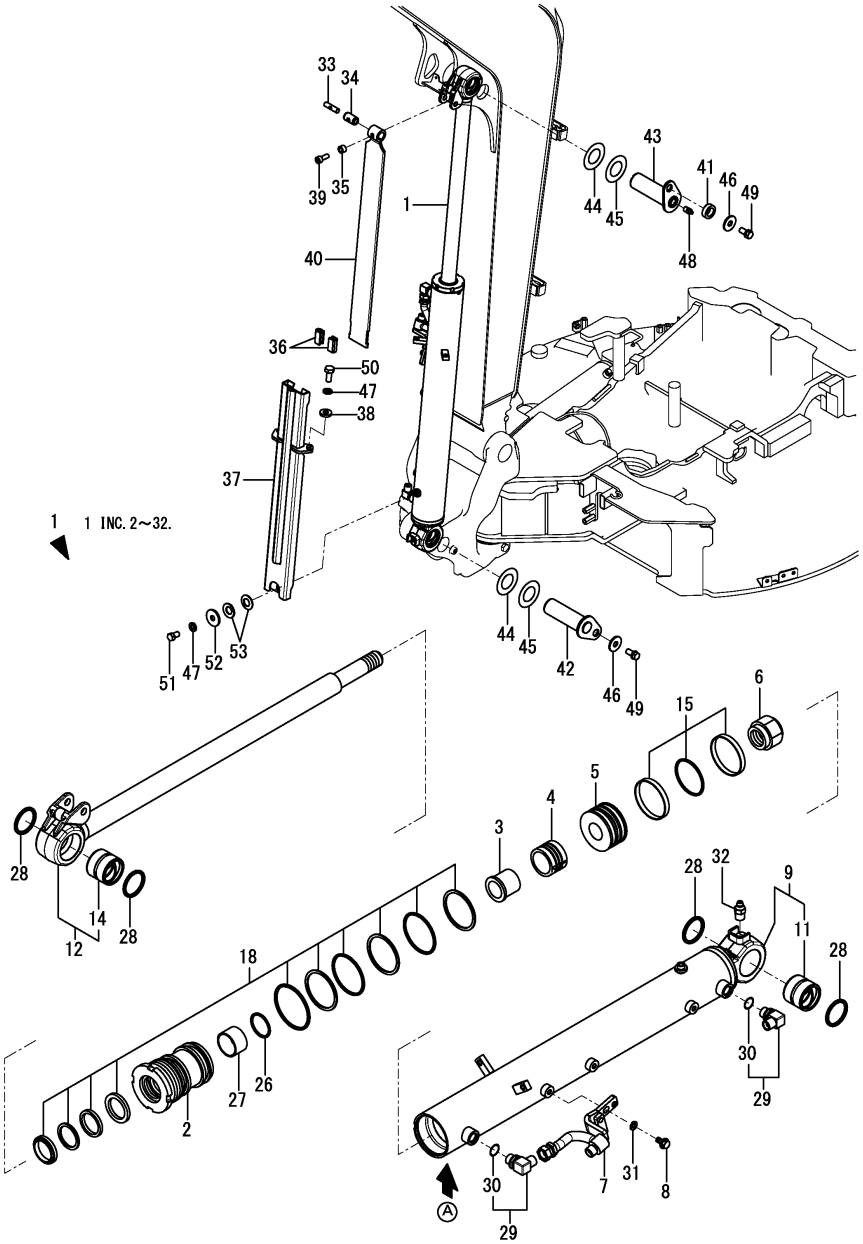

No.	Lev.	Parts No.	Description	Q'ty (A)	(B)	(C)	(D)	(E)	(F)	I	R
1	1	172B03-70100	CYLINDER ASSY, BOOM	1	1					W	
	(A=M61383)	(B=M61383)									
2	2	172B03-70140	HEAD	1	1						
3	2	172B03-70150	COLLAR	1	1						
4	2	172B03-70160	PLUNGER, CUSHION	1	1						
5	2	172B03-70170	PISTON	1	1						
6	2	172B03-70180	NUT, LOCK	1	1						
7	2	172B03-70240	PIPE ASSY	1	1						
8	2	172B03-70250	BOLT, 10 X 20	1	1						
9	2	172B03-70260	REPAIR KIT, TUBE AS	1	1						
11	3	172B03-70130	BUSH, PIN 50	1	1						
12	2	172B03-70270	REPAIR KIT, ROD AS	1	1						
14	3	172B03-70130	BUSH, PIN 50	1	1						
15	2	172B03-70280	SEAL KIT, PISTON	1	1						
18	2	172B03-70290	SEAL KIT, HEAD	1	1						
26	2	172B16-72460	CLIP	1	1						
27	2	172B16-72470	SLEEVE	1	1						
28	2	172B11-72560	SEAL, DUST PIN 50	4	4						
29	2	172141-76900	CONNECTOR ASSY	2	2						
30	3	24315-000180	O-RING, 1BP18.0	2	2						
31	2	22137-100000	WASHER, 10	1	1						
32	2	24761-020000	NIPPLE, GREASE PT1/8	1	1						
33	1	172A23-72043	SHAFT	1	1						
34	1	172A23-72052	GROMMET	1	1						
35	1	172A46-72070	SPACER	1	1						
36	1	172A23-72081	GUIDE, SLIDE	2	2						
37	1	172B03-72240	GUIDE ASSY, 747	1	1						
38	1	172A79-72570	WASHER	2	2						
39	1	172A47-72840	BOLT	1	1						
40	1	172A47-72881-N	PLATE, SLIDE	1	1						
41	1	172164-81670	SPACER	1	1						
42	1	172B03-81760	PIN ASSY,50X158 B	1	1						
43	1	172B03-81820	PIN ASSY,50X158 A	1	1						
44	1	172165-82520	SHIM	2	2						
45	1	172165-82530	SHIM	2	2						
46	1	22157-120000	WASHER, 12	2	2						
47	1	22217-100000	WASHER, SPRING 10	3	3						
48	1	24761-020000	NIPPLE, GREASE PT1/8	1	1						
49	1	26013-120252	BOLT, M12X 25	2	2						
50	1	26076-100252	BOLT, 10.910X 25	2	2						
51	1	26116-100162	BOLT, M10X 16 PLATED	1	1						
52	1	933147-03400	WASHER, BRAKE ARM	1	1						
53	1	933168-14170	SPRING	2	2						

Remarks
* A : There is serial No.(K1570XXX).

N:Old $\frac{\text{Yes}}{\text{No}}$ New, Q:Old $\frac{\text{No}}{\text{Yes}}$ New, R:Old $\frac{\text{Yes}}{\text{Yes}}$ New, S:Old $\frac{\text{No}}{\text{No}}$ New, W:Add, Z:Discontinued, F:Interchangeable by set, K:Q'ty Change

Copyright (C) YANMAR CO., LTD. All RightsReserved.

Fig.88. ARM CYLINDER(QUICK COUPLER SPEC.)(Y SPEC.)

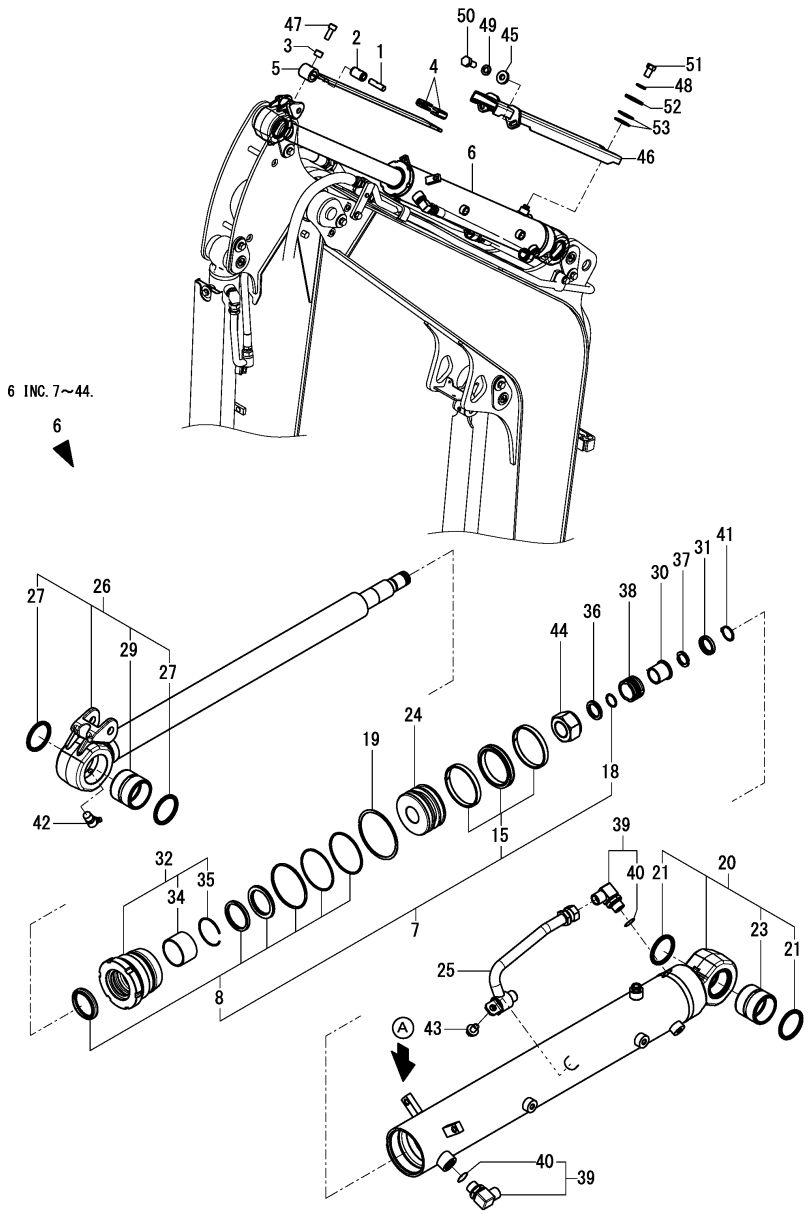

(A)=VIO35-6A P(US) (D)=
(B)=VIO35-6A C(US) (E)=
(C)= (F)=

No.	Lev.	Parts No.	Description	Q'ty (A)	(B)	(C)	(D)	(E)	(F)	I	R
1	1	172A23-72043	SHAFT	1	1						
2	1	172A23-72052	GROMMET	1	1						
3	1	172A46-72070	SPACER	1	1						
4	1	172A23-72081	GUIDE, SLIDE	2	2						
5	1	172B03-72340	PLATE, SLIDE 650	1	1						
6	1	172B03-72451	CYLINDER ASSY, ARM	1	1					Z	1
	(A=M61383)	(B=M61383)									
7	2	172B03-72030	SEAL SET, 85X50	1	1						
8	3	172B03-72040	SEAL SET, HEAD 85X50	1	1						
15	3	172B03-72270	SEAL SET, PISTON 85	1	1						
18	3	24315-000220	O-RING, 1BP22.0	1	1						
19	2	172146-72270	WASHER, LOCK	1	1						
20	2	172B03-72310	TUBE ASSY, ARM	1	1						
21	3	172448-54120	SEAL, DUST	2	2						
23	3	172151-72591	BUSH	1	1						
24	2	172B03-72370	PISTON, 85 33	1	1						
25	2	172B02-72400	PIPE ASSY, ARM	1	1						
26	2	172B03-72401	ROD ASSY, ARM	1	1						
27	3	172448-54120	SEAL, DUST	2	2						
29	3	172151-72591	BUSH	1	1						
30	2	172458-72460	COLLAR, CUSHION	1	1						
31	2	172458-72470	COVER, STOPPER	1	1						
32	2	172B03-72470	HEAD ASSY, 85 50 Q	1	1						
34	3	172151-72540	BUSH, ROD	1	1						
35	3	933125-94500	RING, SPRING	1	1						
36	2	172423-72530	SPACER	1	1						
37	2	172423-72540	STOPPER	2	2						
38	2	172460-72941	PLUNGER, CUSHION	1	1						
39	2	172141-76900	CONNECTOR ASSY	2	2						
40	3	24315-000180	O-RING, 1BP18.0	2	2						
41	2	22242-000260	RING, 26	1	1						
42	2	24761-040000	NIPPLE, GREASE B	1	1						
43	2	26014-100202	BOLT, M10X 20	1	1						
44	2	933111-20200	NUT	1	1						
45	1	172A79-72570	WASHER	2	2						
46	1	172B03-72670	GUIDE ASSY, 655	1	1						
47	1	172A47-72840	BOLT	1	1						
48	1	22217-100000	WASHER, SPRING 10	1	1						
49	1	22217-100000	WASHER, SPRING 10	2	2						
50	1	26076-100252	BOLT, 10.910X 25	2	2						
51	1	26116-100162	BOLT, M10X 16 PLATED	1	1						
52	1	933147-03400	WASHER, BRAKE ARM	1	1						
53	1	933168-14170	SPRING	2	2						

Remarks
(1)A : no mark.
Replacement with Fig.192(88A) No1.

N:Old $\frac{\text{Yes}}{\text{No}}$ New, Q:Old $\frac{\text{No}}{\text{Yes}}$ New, R:Old $\frac{\text{Yes}}{\text{Yes}}$ New, S:Old $\frac{\text{No}}{\text{No}}$ New, W:Add, Z:Discontinued, F:Interchangeable by set, K:Q'ty Change

Copyright (C) YANMAR CO., LTD. All RightsReserved.

Fig.192. (88A)ARM CYLINDER(QUICK COUPLER SPEC.)(K SPEC.)

(A)=VIO35-6A P(US) (D)=
(B)=VIO35-6A C(US) (E)=
(C)= (F)=

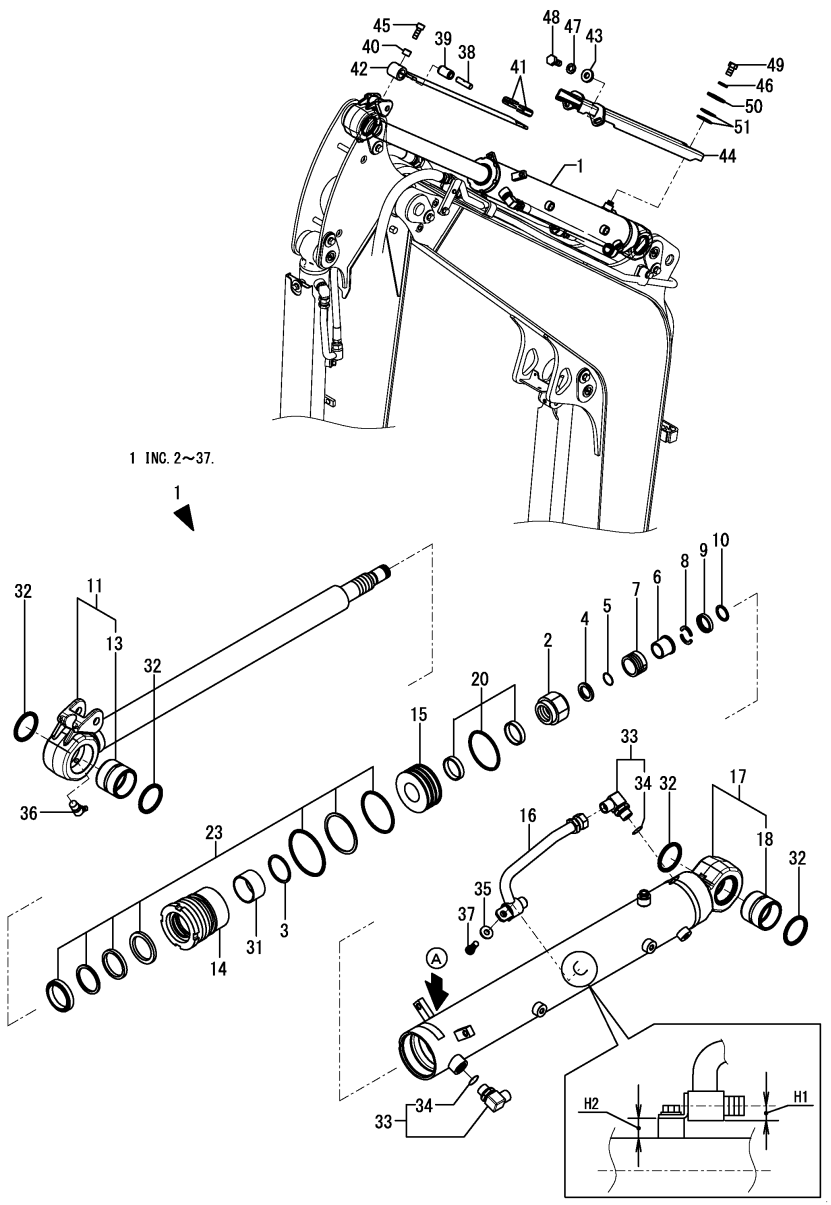

No.	Lev.	Parts No.	Description	Q'ty (A)	(B)	(C)	(D)	(E)	(F)	I	R
1	1	172B03-70900	CYLINDER ASSY,ARM Q	1	1					W	
	(A=M61383)	(B=M61383)									
2	2	172B03-70340	NUT, LOCK	1	1						
3	2	172B03-70370	RING, RETAINING	1	1						
4	2	172B03-70420	SPACER	1	1						
5	2	172B03-70430	O-RING, 1B P 22.0	1	1						
6	2	172B03-70440	COLLAR	1	1						
7	2	172B03-70450	PLUNGER, CUSHION	1	1						
8	2	172B03-70460	STOPPER	2	2						
9	2	172B03-70470	COVER	1	1						
10	2	172B03-70480	RING, RETAINING	1	1						
11	2	172B03-70490	REPAIR KIT, ROD AS	1	1						
13	3	172B03-70320	BUSH, PIN 50	1	1						
14	2	172B03-70920	HEAD	1	1						
15	2	172B03-70930	PISTON	1	1						
16	2	172B03-70960	PIPE ASSY	1	1						
16-1	2	172B03-70961	PIPE ASSY	1	1					S	1
	(A=M63260)	(B=M63260)									
17	2	172B03-70970	REPAIR KIT, TUBE AS	1	1						2
18	3	172B03-70320	BUSH, PIN 50	1	1						
20	2	172B03-70980	SEAL KIT, PISTON	1	1						
23	2	172B03-70990	SEAL KIT, HEAD	1	1						
31	2	172A66-72140	BEARING, SLEEVE	1	1						
32	2	172B11-72560	SEAL, DUST PIN 50	4	4						
33	2	172141-76900	CONNECTOR ASSY	2	2						
34	3	24315-000180	O-RING, 1BP18.0	2	2						
35	2	22137-100000	WASHER, 10	1	1						
36	2	24761-040000	NIPPLE, GREASE B	1	1						
37	2	26076-100162	BOLT, 10 X 16	1	1						
38	1	172A23-72043	SHAFT	1	1						
39	1	172A23-72052	GROMMET	1	1						
40	1	172A46-72070	SPACER	1	1						
41	1	172A23-72081	GUIDE, SLIDE	2	2						
42	1	172B03-72340	PLATE, SLIDE 650	1	1						
43	1	172A79-72570	WASHER	2	2						
44	1	172B03-72670	GUIDE ASSY, 655	1	1						
45	1	172A47-72840	BOLT	1	1						
46	1	22217-100000	WASHER, SPRING 10	1	1						
47	1	22217-100000	WASHER, SPRING 10	2	2						
48	1	26076-100252	BOLT, 10.910X 25	2	2						
49	1	26116-100162	BOLT, M10X 16 PLATED	1	1						
50	1	933147-03400	WASHER, BRAKE ARM	1	1						
51	1	933168-14170	SPRING	2	2						

Remarks
* A : There is serial No.(K1590XXX).
(1)H1=No.16 : 13.5mm, No.16-1 : 14mm.
(2)Up to M63259, H2=13.5mm. From M63260, H2=13.0mm.

N:Old ◄Yes/No► New, Q:Old ◄No/Yes► New, R:Old ◄Yes/Yes► New, S:Old ◄No/No► New, W:Add, Z:Discontinued, F:Interchangeable by set, K:Q'ty Change

Copyright (C) YANMAR CO., LTD. All RightsReserved.

Fig.161. (88B)ARM CYLINDER(STANDARD SPEC.)(Y SPEC.)

(A)=VIO35-6A P(US) (D)=
(B)=VIO35-6A C(US) (E)=
(C)= (F)=

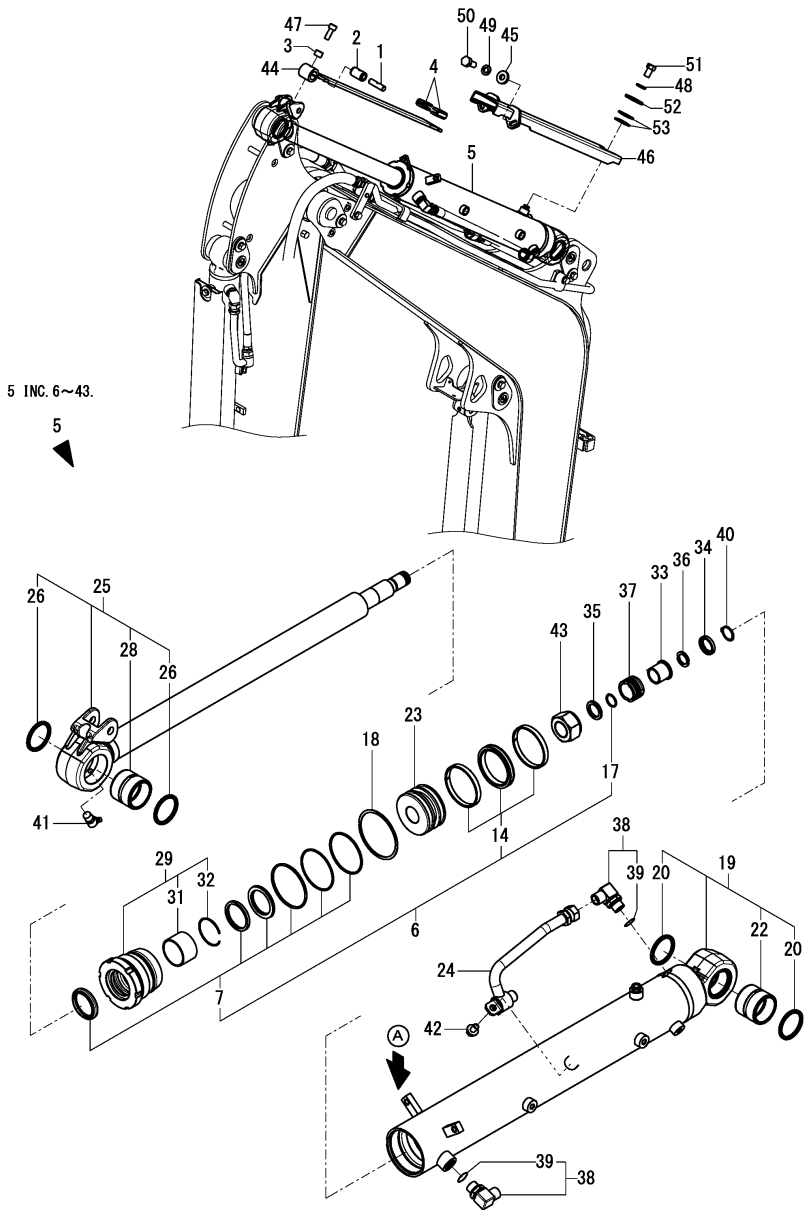

No.	Lev.	Parts No.	Description	Q'ty (A)	(B)	(C)	(D)	(E)	(F)	I	R
1	1	172A23-72043	SHAFT	1	1						
2	1	172A23-72052	GROMMET	1	1						
3	1	172A46-72070	SPACER	1	1						
4	1	172A23-72081	GUIDE, SLIDE	2	2						
5	1	172B03-72301	CYLINDER ASSY, ARM	1	1					Z	1
	(A=M61383)	(B=M61383)									
6	2	172B03-72030	SEAL SET, 85X50	1	1						
7	3	172B03-72040	SEAL SET, HEAD 85X50	1	1						
14	3	172B03-72270	SEAL SET, PISTON 85	1	1						
17	3	24315-000220	O-RING, 1BP22.0	1	1						
18	2	172146-72270	WASHER, LOCK	1	1						
19	2	172B03-72310	TUBE ASSY, ARM	1	1						
20	3	172448-54120	SEAL, DUST	2	2						
22	3	172151-72591	BUSH	1	1						
23	2	172B03-72370	PISTON, 85 33	1	1						
24	2	172B02-72400	PIPE ASSY, ARM	1	1						
25	2	172B03-72401	ROD ASSY, ARM	1	1						
26	3	172448-54120	SEAL, DUST	2	2						
28	3	172151-72591	BUSH	1	1						
29	2	172B03-72430	HEAD ASSY, 85 50	1	1						
31	3	172151-72540	BUSH, ROD	1	1						
32	3	933125-94500	RING, SPRING	1	1						
33	2	172458-72460	COLLAR, CUSHION	1	1						
34	2	172458-72470	COVER, STOPPER	1	1						
35	2	172423-72530	SPACER	1	1						
36	2	172423-72540	STOPPER	2	2						
37	2	172460-72941	PLUNGER, CUSHION	1	1						
38	2	172141-76900	CONNECTOR ASSY	2	2						
39	3	24315-000180	O-RING, 1BP18.0	2	2						
40	2	22242-000260	RING, 26	1	1						
41	2	24761-040000	NIPPLE, GREASE B	1	1						
42	2	26014-100202	BOLT, M10X 20	1	1						
43	2	933111-20200	NUT	1	1						
44	1	172B03-72340	PLATE, SLIDE 650	1	1						
45	1	172A79-72570	WASHER	2	2						
46	1	172B03-72670	GUIDE ASSY, 655	1	1						
47	1	172A47-72840	BOLT	1	1						
48	1	22217-100000	WASHER, SPRING 10	1	1						
49	1	22217-100000	WASHER, SPRING 10	2	2						
50	1	26076-100252	BOLT, 10.910X 25	2	2						
51	1	26116-100162	BOLT, M10X 16 PLATED	1	1						
52	1	933147-03400	WASHER, BRAKE ARM	1	1						
53	1	933168-14170	SPRING	2	2						

Remarks
(1)A : no mark.
Replacement with Fig.196(88C) No1.

N:Old $\frac{\text{Yes}}{\text{No}}$ New, Q:Old $\frac{\text{No}}{\text{Yes}}$ New, R:Old $\frac{\text{Yes}}{\text{Yes}}$ New, S:Old $\frac{\text{No}}{\text{No}}$ New, W:Add, Z:Discontinued, F:Interchangeable by set, K:Q'ty Change

Copyright (C) YANMAR CO., LTD. All RightsReserved.

Fig.196. (88C)ARM CYLINDER(STANDARD SPEC.)(K SPEC.)

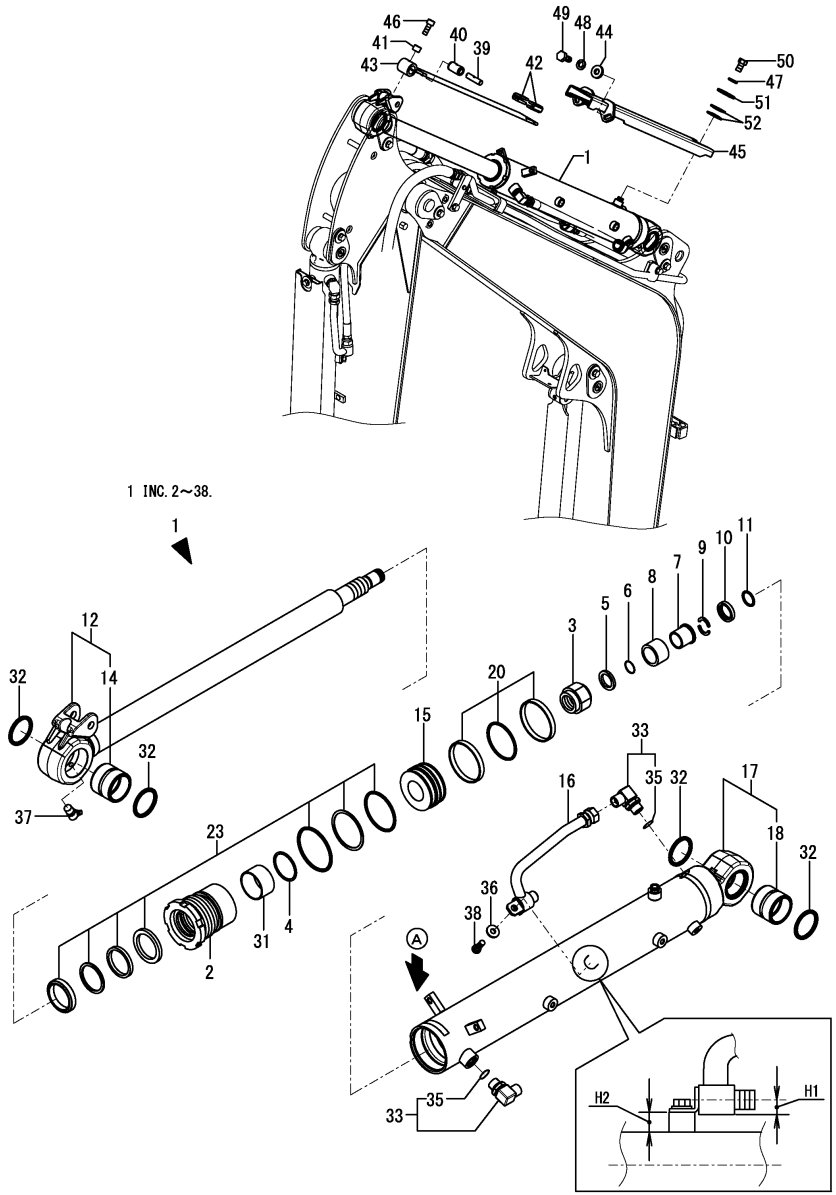

(A)=VIO35-6A P(US) (D)=
(B)=VIO35-6A C(US) (E)=
(C)= (F)=

No.	Lev.	Parts No.	Description	Q'ty (A)	(B)	(C)	(D)	(E)	(F)	I	R
1	1	172B03-70300	CYLINDER ASSY, ARM	1	1					W	
	(A=M61383)	(B=M61383)									
2	2	172B03-70330	HEAD	1	1						
3	2	172B03-70340	NUT, LOCK	1	1						
4	2	172B03-70370	RING, RETAINING	1	1						
5	2	172B03-70420	SPACER	1	1						
6	2	172B03-70430	O-RING, 1B P 22.0	1	1						
7	2	172B03-70440	COLLAR	1	1						
8	2	172B03-70450	PLUNGER, CUSHION	1	1						
9	2	172B03-70460	STOPPER	2	2						
10	2	172B03-70470	COVER	1	1						
11	2	172B03-70480	RING, RETAINING	1	1						
12	2	172B03-70490	REPAIR KIT, ROD AS	1	1						
14	3	172B03-70320	BUSH, PIN 50	1	1						
15	2	172B03-70930	PISTON	1	1						
16	2	172B03-70960	PIPE ASSY	1	1						
16-1	2	172B03-70961	PIPE ASSY	1	1					S	1
	(A=M63260)	(B=M63260)									
17	2	172B03-70970	REPAIR KIT, TUBE AS	1	1						2
18	3	172B03-70320	BUSH, PIN 50	1	1						
20	2	172B03-70980	SEAL KIT, PISTON	1	1						
23	2	172B03-70990	SEAL KIT, HEAD	1	1						
31	2	172A66-72140	BEARING, SLEEVE	1	1						
32	2	172B11-72560	SEAL, DUST PIN 50	4	4						
33	2	172141-76900	CONNECTOR ASSY	2	2						
35	3	24315-000180	O-RING, 1BP18.0	2	2						
36	2	22137-100000	WASHER, 10	1	1						
37	2	24761-040000	NIPPLE, GREASE B	1	1						
38	2	26076-100162	BOLT, 10 X 16	1	1						
39	1	172A23-72043	SHAFT	1	1						
40	1	172A23-72052	GROMMET	1	1						
41	1	172A46-72070	SPACER	1	1						
42	1	172A23-72081	GUIDE, SLIDE	2	2						
43	1	172B03-72340	PLATE, SLIDE 650	1	1						
44	1	172A79-72570	WASHER	2	2						
45	1	172B03-72670	GUIDE ASSY, 655	1	1						
46	1	172A47-72840	BOLT	1	1						
47	1	22217-100000	WASHER, SPRING 10	1	1						
48	1	22217-100000	WASHER, SPRING 10	2	2						
49	1	26076-100252	BOLT, 10.910X 25	2	2						
50	1	26116-100162	BOLT, M10X 16 PLATED	1	1						
51	1	933147-03400	WASHER, BRAKE ARM	1	1						
52	1	933168-14170	SPRING	2	2						

Remarks
* A : There is serial No.(K1580XXX).
(1)H1=No.16 : 13.5mm, No.16-1 : 14mm.
(2)Up to M63259, H2=13.5mm. From M63260, H2=13.0mm.

N:Old ←Yes/No→ New, Q:Old ←No/Yes→ New, R:Old ←Yes/Yes→ New, S:Old ←No/No→ New, W:Add, Z:Discontinued, F:Interchangeable by set, K:Q'ty Change

Copyright (C) YANMAR CO., LTD. All RightsReserved.

Fig.89. BUCKET CYLINDER(Y SPEC.)

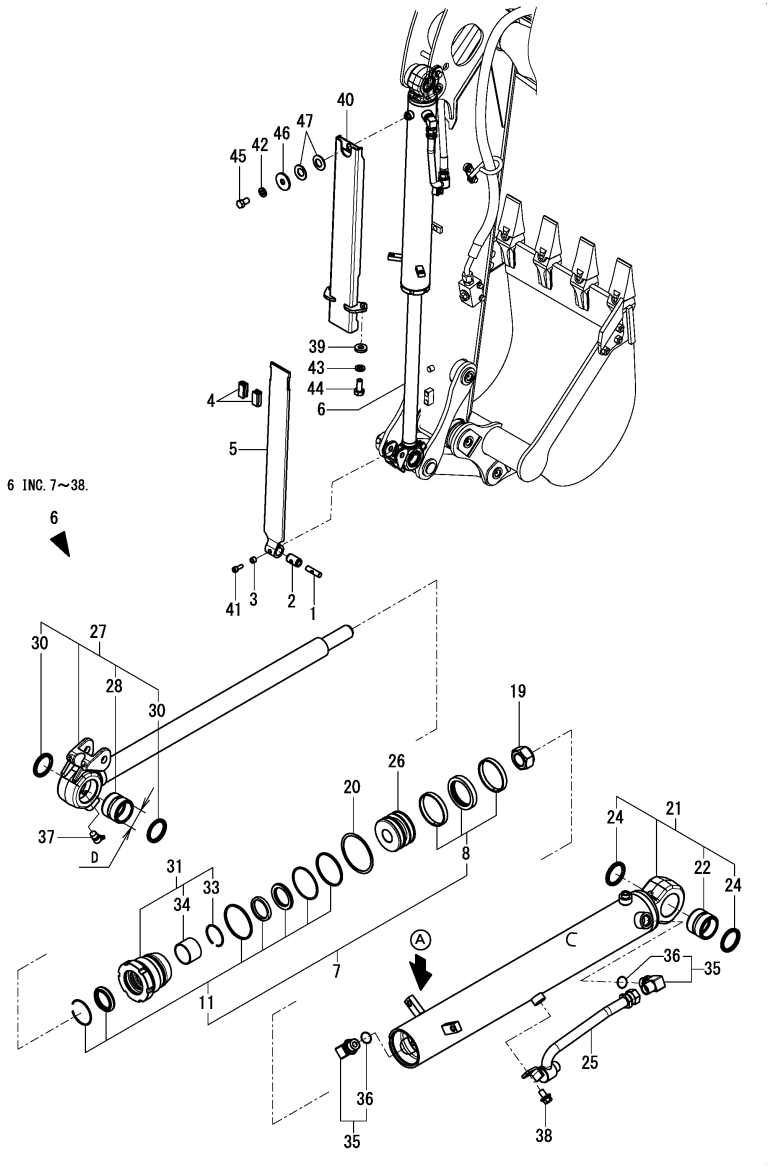

(A)=VIO35-6A P(US) (D)=
(B)=VIO35-6A C(US) (E)=
(C)= (F)=

No.	Lev.	Parts No.	Description	Q'ty (A)	(B)	(C)	(D)	(E)	(F)	I	R
1	1	172A23-72043	SHAFT	1	1						
2	1	172A23-72052	GROMMET	1	1						
3	1	172A46-72070	SPACER	1	1						
4	1	172A23-72081	GUIDE, SLIDE	2	2						
5	1	172B03-72340	PLATE, SLIDE 650	1	1						
6	1	172B03-72500	CYLINDER ASSY	1	1						
6-1	1	172B03-72501	CYLINDER ASSY,BUCKET	1	1					S	1
	(A=M60549)	(B=M60549)									
6-2	1	172B03-72501	CYLINDER ASSY,BUCKET	1	1					Z	2
	(A=M61383)	(B=M61383)									
7	2	172B03-72050	SEAL SET, 70X40	1	1						
8	3	172B03-72570	SEAL SET, PISTON 70	1	1						
11	3	172A46-72590	SEAL SET, HEAD	1	1						
19	2	172141-72250	NUT	1	1						
20	2	172141-72420	WASHER, LOCK	1	1						
21	2	172B03-72510	TUBE ASSY, BUCKET	1	1						
22	3	172165-72310	BUSH	1	1						
24	3	172448-72650	SEAL, DUST	2	2						
25	2	172B03-72550	PIPE ASSY, BUCKET	1	1						
26	2	172B03-72580	PISTON, 70 27	1	1						
27	2	172B03-72600	ROD ASSY, BUCKET	1	1						
27-1	2	172B03-72601	ROD ASSY, BUCKET	1	1					S	1
	(A=M60549)	(B=M60549)									
28	3	172165-72310	BUSH	1	1						
28-1	3	172168-72240	BUSH	1	1					S	1
	(A=M60549)	(B=M60549)									
30	3	172448-72650	SEAL, DUST	2	2						
30-1	3	172168-81270	SEAL, DUST	2	2					S	1
	(A=M60549)	(B=M60549)									
31	2	172B03-72650	HEAD ASSY, 70 40	1	1						
33	3	172141-73090	RING, SPRING	1	1						
34	3	24550-040300	BUSH, 40X30	1	1						
35	2	172141-76900	CONNECTOR ASSY	2	2						
36	3	24315-000180	O-RING, 1BP18.0	2	2						
37	2	24761-040000	NIPPLE, GREASE B	1	1						
38	2	26014-100202	BOLT, M10X 20	1	1						
39	1	172A79-72570	WASHER	2	2						
40	1	172B03-72670	GUIDE ASSY, 655	1	1						
41	1	172A47-72840	BOLT	1	1						
42	1	22217-100000	WASHER, SPRING 10	1	1						
43	1	22217-100000	WASHER, SPRING 10	2	2						
44	1	26076-100252	BOLT, 10.910X 25	2	2						
45	1	26116-100162	BOLT, M10X 16 PLATED	1	1						
46	1	933147-03400	WASHER, BRAKE ARM	1	1						
47	1	933168-14170	SPRING	2	2						

Remarks
(1)D=No.6, 27, 28, 30 : 40mm, No.6-1, 27-1, 28-1, 30-1 : 38mm.
Following machine is finished with remodeling at the time of factory shipment.
M60519, M60540, M60543, M60546.
(2)A : no mark.
Replacement with Fig.193(89A) No1.

N:Old $\overset{\text{Yes}}{\underset{\text{No}}{\leftrightarrow}}$ New, Q:Old $\overset{\text{No}}{\underset{\text{Yes}}{\leftrightarrow}}$ New, R:Old $\overset{\text{Yes}}{\underset{\text{Yes}}{\leftrightarrow}}$ New, S:Old $\overset{\text{No}}{\underset{\text{No}}{\leftrightarrow}}$ New, W:Add, Z:Discontinued, F:Interchangeable by set, K:Q'ty Change

Copyright (C) YANMAR CO., LTD. All RightsReserved.

Fig.193. (89A)BUCKET CYLINDER(K SPEC.)

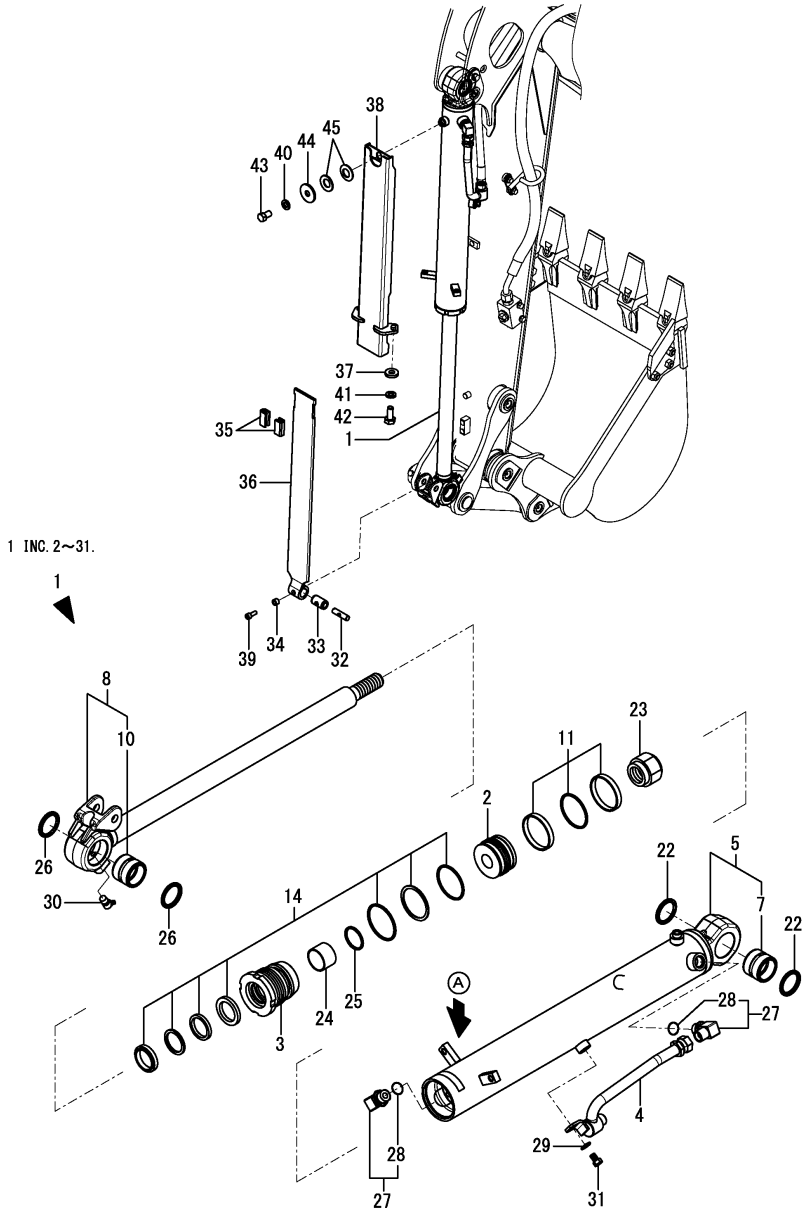

(A)=VIO35-6A P(US) (D)=
(B)=VIO35-6A C(US) (E)=
(C)= (F)=

No.	Lev.	Parts No.	Description	Q'ty (A)	(B)	(C)	(D)	(E)	(F)	I	R
1	1	172B03-70500	CYLINDER ASSY,BUCKET	1	1					W	
	(A=M61383)	(B=M61383)									
2	2	172B03-70530	PISTON	1	1						
3	2	172B03-70540	HEAD	1	1						
4	2	172B03-70620	PIPE ASSY	1	1						
5	2	172B03-70630	REPAIR KIT, TUBE AS	1	1						
7	3	172B16-72860	BUSH, PIN 40	1	1						
8	2	172B03-70640	REPAIR KIT, ROD AS	1	1						
10	3	172B16-72400	BUSH, PIN 38	1	1						
11	2	172B03-70650	SEAL KIT, PISTON	1	1						
14	2	172B03-70660	SEAL KIT, HEAD	1	1						
22	2	172B16-71200	SEAL, DUST PIN 40	2	2						
23	2	172B16-72090	NUT, LOCK	1	1						
24	2	172B16-72140	SLEEVE	1	1						
25	2	172B16-72150	RING, RETAINING	1	1						
26	2	172B16-72540	SEAL, DUST PIN 38	2	2						
27	2	172141-76900	CONNECTOR ASSY	2	2						
28	3	24315-000180	O-RING, 1BP18.0	2	2						
29	2	22137-100000	WASHER, 10	1	1						
30	2	24761-040000	NIPPLE, GREASE B	1	1						
31	2	26076-100162	BOLT, 10 X 16	1	1						
32	1	172A23-72043	SHAFT	1	1						
33	1	172A23-72052	GROMMET	1	1						
34	1	172A46-72070	SPACER	1	1						
35	1	172A23-72081	GUIDE, SLIDE	2	2						
36	1	172B03-72340	PLATE, SLIDE 650	1	1						
37	1	172A79-72570	WASHER	2	2						
38	1	172B03-72670	GUIDE ASSY, 655	1	1						
39	1	172A47-72840	BOLT	1	1						
40	1	22217-100000	WASHER, SPRING 10	1	1						
41	1	22217-100000	WASHER, SPRING 10	2	2						
42	1	26076-100252	BOLT, 10.910X 25	2	2						
43	1	26116-100162	BOLT, M10X 16 PLATED	1	1						
44	1	933147-03400	WASHER, BRAKE ARM	1	1						
45	1	933168-14170	SPRING	2	2						

Remarks
* A : There is serial No.(K1600XXX).

N:Old $\frac{\text{Yes}}{\text{No}}$ New, Q:Old $\frac{\text{No}}{\text{Yes}}$ New, R:Old $\frac{\text{Yes}}{\text{Yes}}$ New, S:Old $\frac{\text{No}}{\text{No}}$ New, W:Add, Z:Discontinued, F:Interchangeable by set, K:Q'ty Change

Copyright (C) YANMAR CO., LTD. All RightsReserved.

Fig.90. SWING CYLINDER(Y SPEC.)

(A)=VIO35-6A P(US) (D)=
(B)=VIO35-6A C(US) (E)=
(C)= (F)=

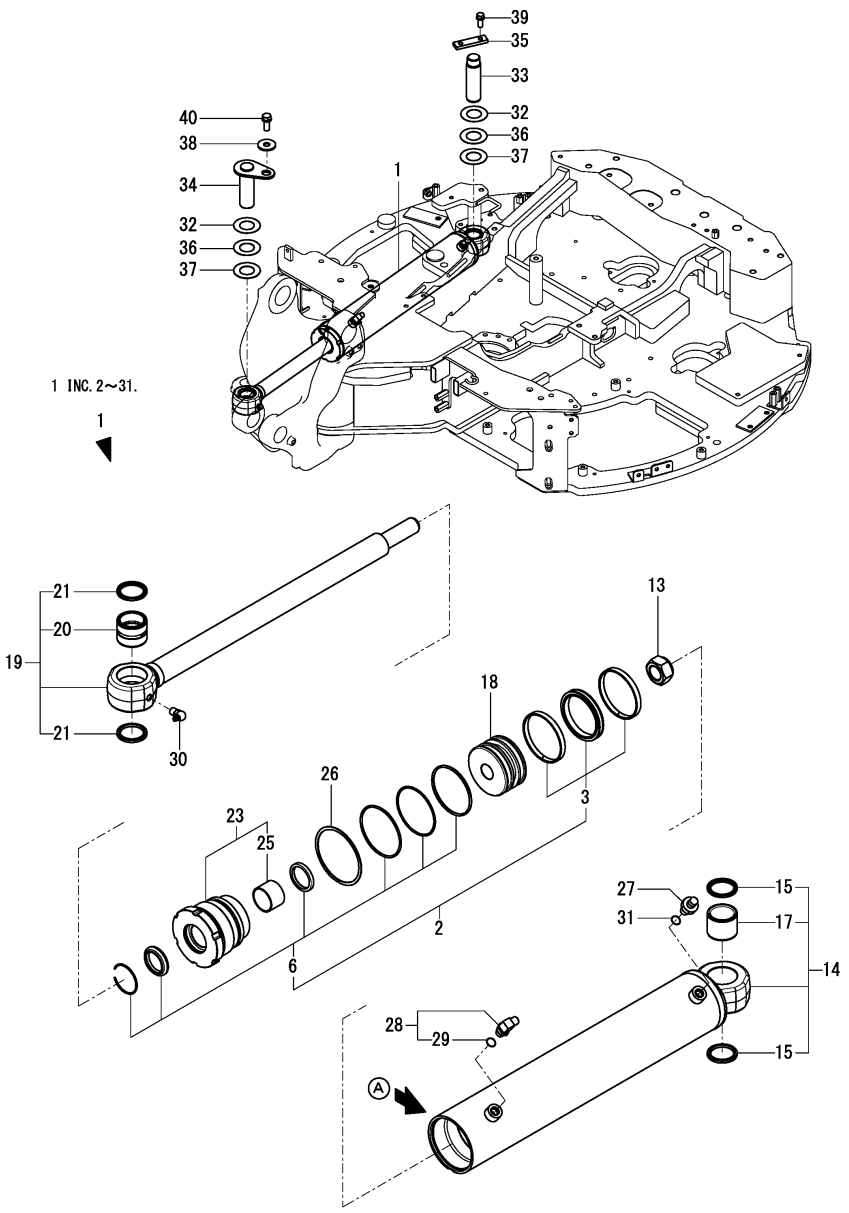

No.	Lev.	Parts No.	Description	Q'ty (A)	(B)	(C)	(D)	(E)	(F)	I	R
1	1	172B03-72700	CYLINDER ASSY, SWING	1	1					Z	1
	(A=M61383)	(B=M61383)									
2	2	172B03-72070	SEAL SET, 90X40	1	1						
3	3	172B03-72390	SEAL SET, PISTON 90	1	1						
6	3	172A46-72910	SEAL SET, HEAD	1	1						
13	2	172141-72250	NUT	1	1						
14	2	172B03-72710	TUBE ASSY, SWING	1	1						
15	3	172448-72650	SEAL, DUST	2	2						
17	3	172458-72740	BUSH	1	1						
18	2	172B03-72740	PISTON, 90 27	1	1						
19	2	172B03-72750	ROD ASSY, SWING	1	1						
20	3	172165-72310	BUSH	1	1						
21	3	172448-72650	SEAL, DUST	2	2						
23	2	172B03-72780	HEAD ASSY,SWING	1	1						
25	3	24550-040300	BUSH, 40X30	1	1						
26	2	172151-72870	WASHER, LOCK	1	1						
27	2	172123-76121	ADAPTER	1	1						
28	2	172141-76181	CONNECTOR ASSY, 02FF	1	1						
29	3	41851-000110	O-RING	1	1						
30	2	24761-050000	NIPPLE, GREASE C	1	1						
31	2	41851-000110	O-RING	1	1						
32	1	172A25-81900	SHIM	2	2						
33	1	172A46-81901	PIN	1	1						
34	1	172B03-81950	PIN ASSY, 40X122	1	1						
35	1	172A47-81980	PLATE, LOCK	1	1						
36	1	172165-82580	SHIM	2	2						
37	1	172165-82590	SHIM	2	2						
38	1	22157-120000	WASHER, 12	1	1						
39	1	26013-100252	BOLT, M10X 25	2	2						
40	1	26013-120302	BOLT, M12X 30	1	1						

Remarks
(1)A : no mark.
Replacement with Fig.194(90A) No1.

N:Old $\frac{\text{Yes}}{\text{No}}$ New, Q:Old $\frac{\text{No}}{\text{Yes}}$ New, R:Old $\frac{\text{Yes}}{\text{Yes}}$ New, S:Old $\frac{\text{No}}{\text{No}}$ New, W:Add, Z:Discontinued, F:Interchangeable by set, K:Q'ty Change

Copyright (C) YANMAR CO., LTD. All RightsReserved.

Fig.194. (90A)SWING CYLINDER(K SPEC.)

(A)=VIO35-6A P(US) (D)=
(B)=VIO35-6A C(US) (E)=
(C)= (F)=

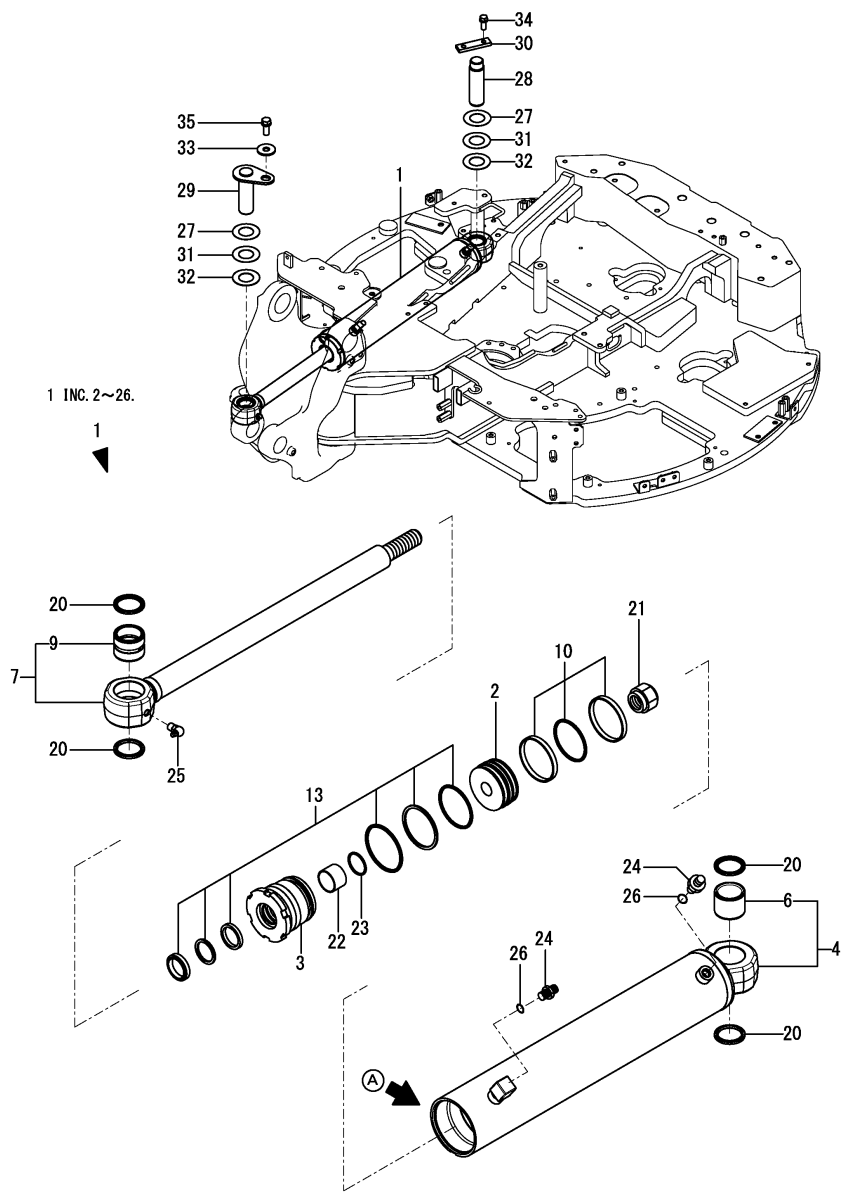

No.	Lev.	Parts No.	Description	Q'ty (A)	(B)	(C)	(D)	(E)	(F)	I	R
1	1	172B03-70700	CYLINDER ASSY, SWING	1	1					W	
	(A=M61383)	(B=M61383)									
2	2	172B03-70730	PISTON	1	1						
3	2	172B03-70740	HEAD	1	1						
4	2	172B03-70760	REPAIR KIT, TUBE AS	1	1						
6	3	172458-72740	BUSH	1	1						
6-1	3	172458-72741	BUSH, 40X40SO	1	1					N	
	(A=*2016.03.)	(B=*2016.03.)									
6-2	3	172B03-70870	BUSH, 40X40SO	1	1					N	
	(A=M62815)	(B=M62815)									
7	2	172B03-70770	REPAIR KIT, ROD AS	1	1						
9	3	172B16-72860	BUSH, PIN 40	1	1						
10	2	172B03-70780	SEAL KIT, PISTON	1	1						
13	2	172B03-70790	SEAL KIT, HEAD	1	1						
20	2	172B16-71200	SEAL, DUST PIN 40	4	4						
21	2	172B16-72090	NUT, LOCK	1	1						
22	2	172B16-72140	SLEEVE	1	1						
23	2	172B16-72150	RING, RETAINING	1	1						
24	2	172123-76121	ADAPTER	2	2						
25	2	24761-050000	NIPPLE, GREASE C	1	1						
26	2	41851-000110	O-RING	2	2						
27	1	172A25-81900	SHIM	2	2						
28	1	172A46-81901	PIN	1	1						
29	1	172B03-81950	PIN ASSY, 40X122	1	1						
30	1	172A47-81980	PLATE, LOCK	1	1						
31	1	172165-82580	SHIM	2	2						
32	1	172165-82590	SHIM	2	2						
33	1	22157-120000	WASHER, 12	1	1						
34	1	26013-100252	BOLT, SPRING M10X 25	2	2						
35	1	26013-120302	BOLT, SPRING M12X 30	1	1						

Remarks
* A : There is serial No.(K1611XXX).

N:Old $\frac{\text{Yes}}{\text{No}}$ New, Q:Old $\frac{\text{No}}{\text{Yes}}$ New, R:Old $\frac{\text{Yes}}{\text{Yes}}$ New, S:Old $\frac{\text{No}}{\text{No}}$ New, W:Add, Z:Discontinued, F:Interchangeable by set, K:Q'ty Change

Copyright (C) YANMAR CO., LTD. All RightsReserved.

Fig.91. BLADE CYLINDER(Y SPEC.)

(A)=VIO35-6A P(US)
(B)=VIO35-6A C(US)
(C)=
(D)=
(E)=
(F)=

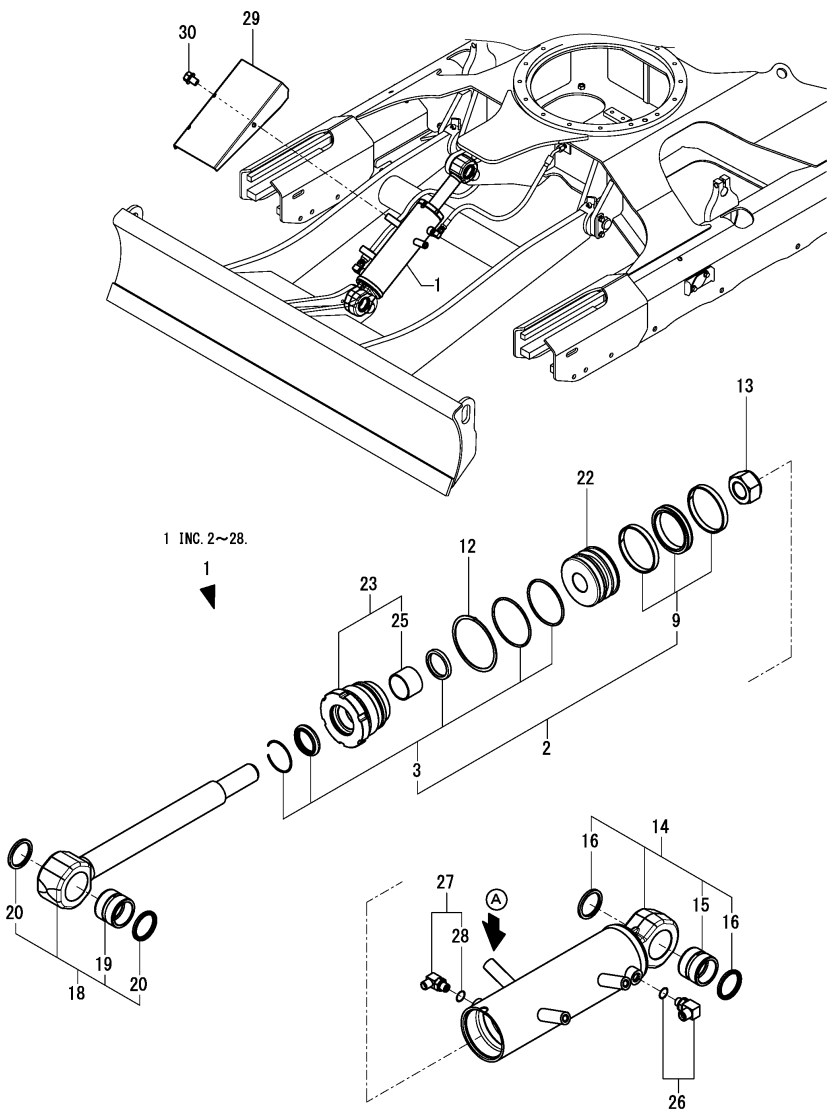

No.	Lev.	Parts No.	Description	Q'ty (A)	(B)	(C)	(D)	(E)	(F)	I	R
1	1	172B03-72800	CYLINDER ASSY, BLADE	1	1					Z	1
	(A=M61383)	(B=M61383)									
2	2	172B03-72080	SEAL SET, 80X40	1	1						
3	3	172458-72050	SEAL SET, HEAD	1	1						
9	3	172B03-72930	SEAL SET, PISTON 80	1	1						
12	2	172142-72260	WASHER, LOCK	1	1						
13	2	172175-72550	NUT	1	1						
14	2	172B03-72810	TUBE ASSY, BLADE	1	1						
15	3	172168-72410	BUSH	1	1						
16	3	172448-72650	SEAL, DUST	2	2						
18	2	172B03-72850	ROD ASSY, BLADE	1	1						
19	3	172168-72410	BUSH	1	1						
20	3	172448-72650	SEAL, DUST	2	2						
22	2	172B03-72880	PISTON, 80 30	1	1						
23	2	172B03-72950	HEAD ASSY, 80 40	1	1						
25	3	24550-040300	BUSH, 40X30	1	1						
26	2	172173-76121	CONNECTOR ASSY	1	1						
27	2	172141-76181	CONNECTOR ASSY, 02FF	1	1						
28	3	41851-000110	O-RING	1	1						
29	1	172B03-72900	COVER ASSY, BLADE	1	1						
30	1	26106-100122	BOLT, M10X 12 PLATED	3	3						

Remarks
* Not applied for angle blade specification.
(1)A : no mark.
Replacement with Fig.195(91A) No1.

N:Old $\frac{\text{Yes}}{\text{No}}$ New, Q:Old $\frac{\text{No}}{\text{Yes}}$ New, R:Old $\frac{\text{Yes}}{\text{Yes}}$ New, S:Old $\frac{\text{No}}{\text{No}}$ New, W:Add, Z:Discontinued, F:Interchangeable by set, K:Q'ty Change

Copyright (C) YANMAR CO., LTD. All RightsReserved.

Fig.195. (91A)BLADE CYLINDER(K SPEC.)

(A)=VIO35-6A P(US)
(B)=VIO35-6A C(US)
(C)=
(D)=
(E)=
(F)=

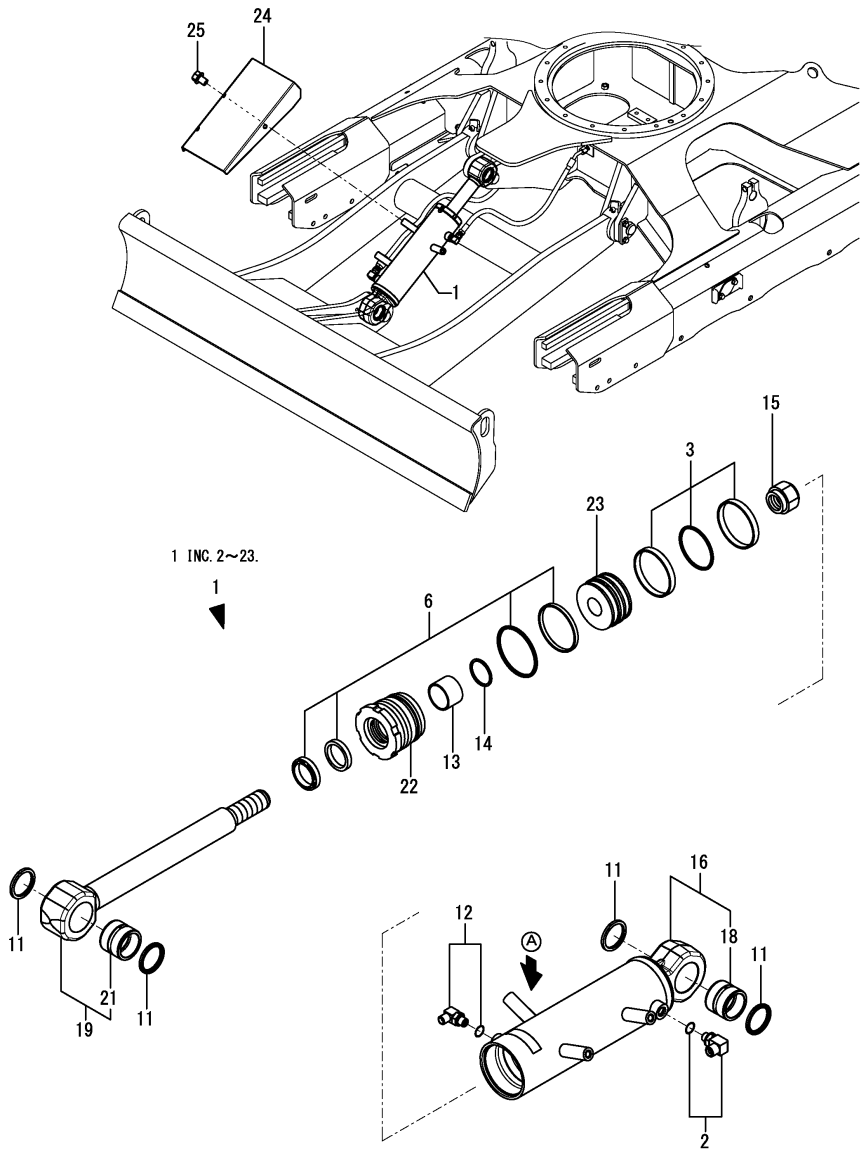

No.	Lev.	Parts No.	Description	Q'ty (A)	(B)	(C)	(D)	(E)	(F)	I	R
1	1	172B03-70800	CYLINDER ASSY, BLADE	1	1					W	
	(A=M61383)	(B=M61383)									
2	2	172B03-70840	CONNECTOR ASSY, 3/8L	1	1						
3	2	172B03-70850	SEAL KIT, PISTON	1	1						
6	2	172B03-70860	SEAL KIT, HEAD	1	1						
11	2	172B16-71200	SEAL, DUST PIN 40	4	4						
12	2	172B16-71210	ELBOW ASSY, 90 G1/4	1	1						
13	2	172B16-72140	SLEEVE	1	1						
14	2	172B16-72150	RING, RETAINING	1	1						
15	2	172B16-72430	NUT, LOCK	1	1						
16	2	172B16-72750	REPAIR KIT, TUBE AS	1	1						
18	3	172B16-72860	BUSH, PIN 40	1	1						
19	2	172B16-72760	REPAIR KIT, ROD AS	1	1						
21	3	172B16-72860	BUSH, PIN 40	1	1						
22	2	172B16-72870	HEAD	1	1						
23	2	172B16-72880	PISTON	1	1						
24	1	172B03-72900	COVER ASSY, BLADE	1	1						
25	1	26106-100122	BOLT, M10X 12 PLATED	3	3						

Remarks
* A : There is serial No.(K1621XXX).

N:Old ←Yes/No→ New, Q:Old ←No/Yes→ New, R:Old ←Yes/Yes→ New, S:Old ←No/No→ New, W:Add, Z:Discontinued, F:Interchangeable by set, K:Q'ty Change

Copyright (C) YANMAR CO., LTD. All RightsReserved.

Fig.162. (91B)BLADE CYLINDER(ANGLE BLADE SPEC.)

(A)=VIO35-6A P(US)
(B)=VIO35-6A C(US)
(C)=
(D)=
(E)=
(F)=

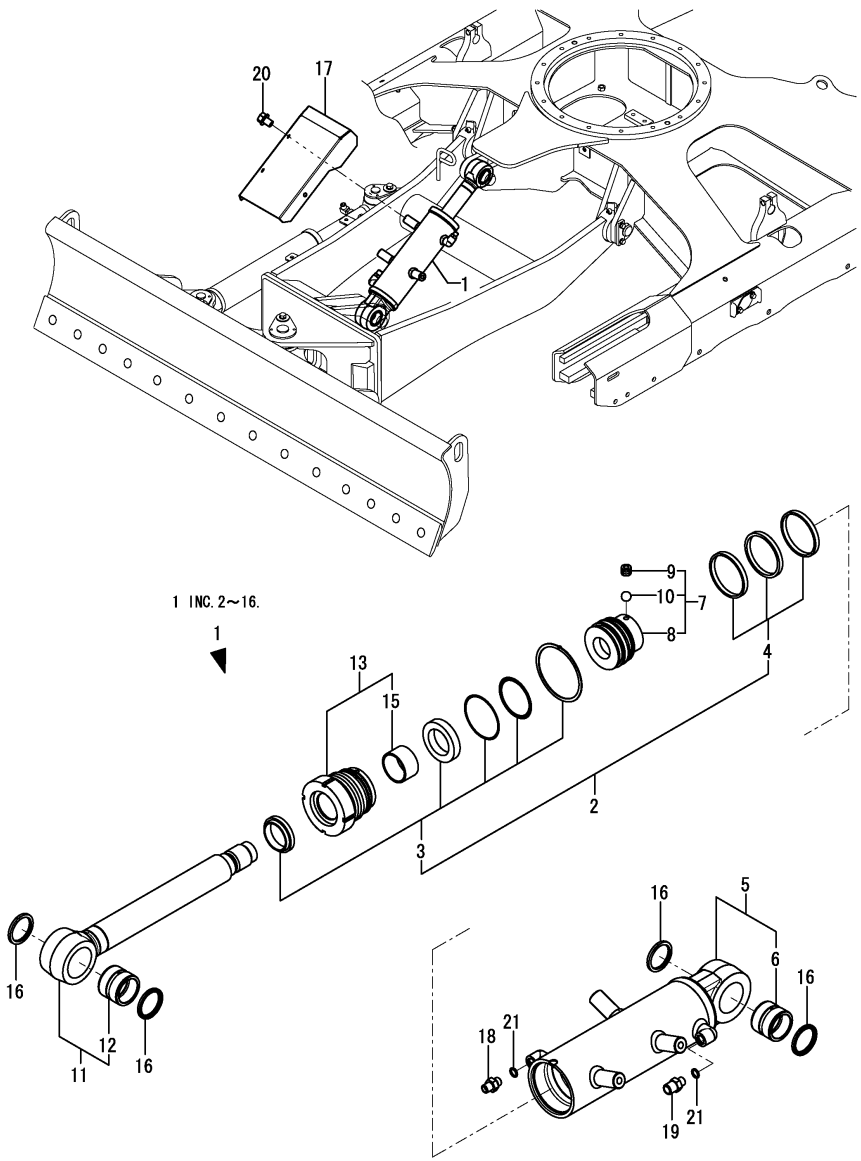

No.	Lev.	Parts No.	Description	Q'ty (A)	(B)	(C)	(D)	(E)	(F)	I	R
1	1	172B03-71800	CYLINDER ASSY,BLADEA	1	1						
2	2	172B03-71010	SEAL KIT, CYL.85X45	1	1						
3	3	172B03-71020	SEAL SET, HEAD 85X45	1	1						
4	3	172A79-72090	SEAL SET, PISTON	1	1						
5	2	172B03-71810	TUBE ASSY, BLADE ANG	1	1						
6	3	172B03-71820	BUSH, 40X50X40	1	1						
7	2	172B03-71830	PISTON ASSY	1	1						
8	3	172B03-71840	PISTON	1	1						
9	3	172A79-72870	SCREW,M8	1	1						
10	3	24190-070002	BALL, STEEL 7/32	1	1						
11	2	172B03-71850	ROD ASSY, BLADE ANG	1	1						
12	3	172B03-71820	BUSH, 40X50X40	1	1						
13	2	172B03-71870	HEAD ASSY, 85 45	1	1						
15	3	172B04-72270	BUSH, 45	1	1						
16	2	172B04-72770	SEAL,DUST 40	4	4						
17	1	172B03-71950	COVER ASSY,BLADE A	1	1						
18	1	172123-76121	ADAPTER	1	1						
19	1	172638-76190	CONNECTOR,PF1/4PF3/8	1	1						
20	1	26106-100122	BOLT, M10X 12 PLATED	3	3						
21	1	41851-000110	O-RING	2	2						

Remarks
* Exclusive figure for angle blade specification.

N:Old ←Yes/No→ New, Q:Old ←No/Yes→ New, R:Old ←Yes/Yes→ New, S:Old ←No/No→ New, W:Add, Z:Discontinued, F:Interchangeable by set, K:Q'ty Change

Copyright (C) YANMAR CO., LTD. All RightsReserved.

Fig.163. (91C)ANGEL CYLINDER(ANGLE BLADE SPEC.)

(A)=VIO35-6A P(US)
(B)=VIO35-6A C(US)
(C)=
(D)=
(E)=
(F)=

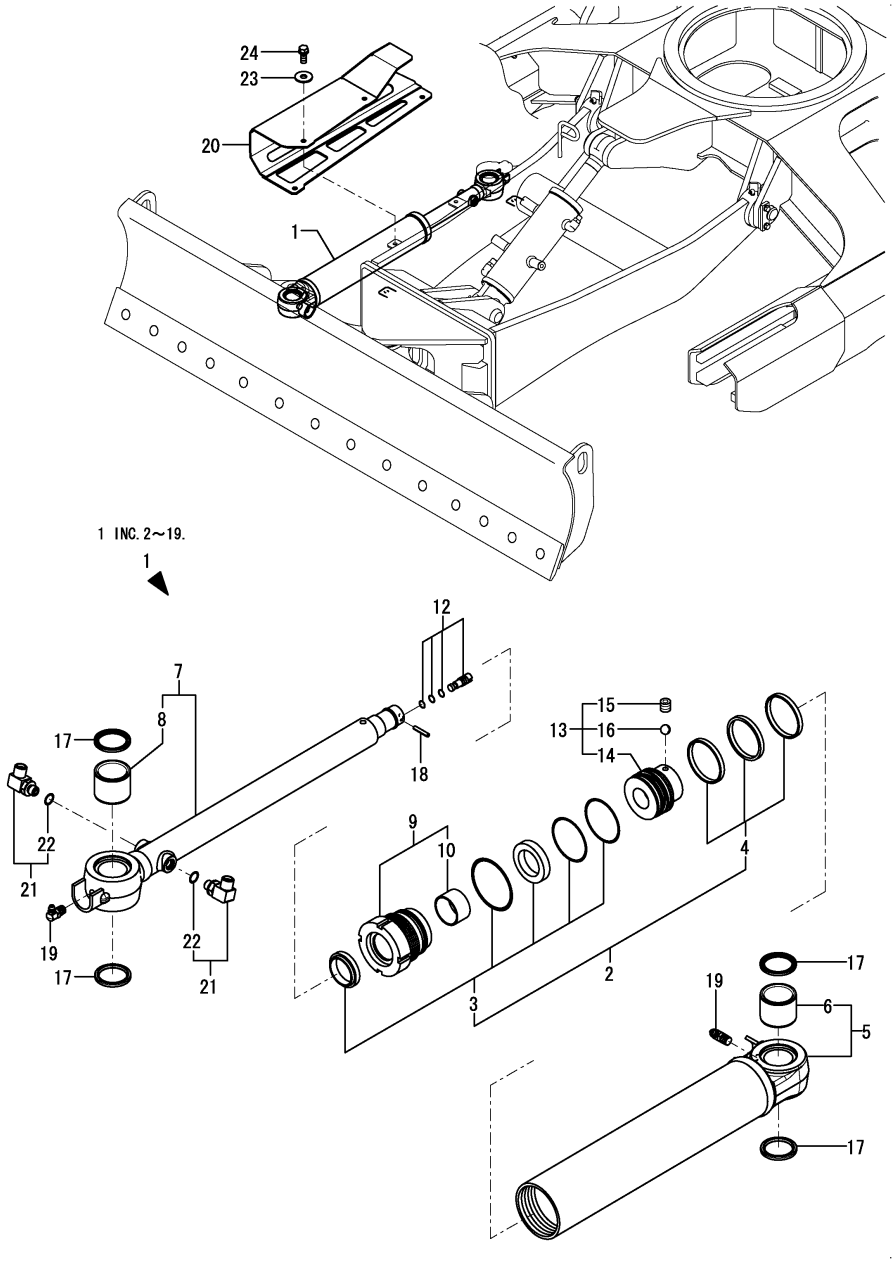

No.	Lev.	Parts No.	Description	Q'ty (A)	(B)	(C)	(D)	(E)	(F)	I	R
1	1	172B03-71500	CYLINDER ASSY,ANGLE	1	1						
2	2	172B03-71050	SEAL KIT, CYL.70X40	1	1						
3	3	172B03-71060	SEAL SET, HEAD 70X40	1	1						
4	3	172B04-72690	SEAL SET,PISTON 70	1	1						
5	2	172B03-71510	TUBE ASSY,ANGLE	1	1						
6	3	172A23-70120	BUSH, PIN 40	1	1						
7	2	172B03-71550	ROD ASSY, ANGLE	1	1						
8	3	172A23-70120	BUSH, PIN 40	1	1						
9	2	172B03-71570	HEAD ASSY, 70 40	1	1						
10	3	172A23-71460	BEARING, SLEEVE	1	1						
12	2	172B03-71590	PLUG ASSY	1	1						
13	2	172B04-72570	PISTON ASSY	1	1						
14	3	172B04-72580	PISTON	1	1						
15	3	172A79-72870	SCREW,M8	1	1						
16	3	24190-070002	BALL, STEEL 7/32	1	1						
17	2	172B04-72770	SEAL,DUST 40	4	4						
18	2	22351-025022	PIN, SPRING 2.5X22	1	1						
19	2	24761-050000	NIPPLE, GREASE C	2	2						
20	1	172B03-71900	COVER ASSY,ANGLE	1	1						
21	1	172173-76121	CONNECTOR ASSY	2	2						
22	2	24315-000110	O-RING, 1BP11.0	2	2						
23	1	22157-100000	WASHER, 10	4	4						
24	1	26013-100252	BOLT, M10X 25	4	4						

Remarks
* Exclusive figure for angle blade specification.

N:Old ◄Yes/No► New, Q:Old ◄No/Yes► New, R:Old ◄Yes/Yes► New, S:Old ◄No/No► New, W:Add, Z:Discontinued, F:Interchangeable by set, K:Q'ty Change

Copyright (C) YANMAR CO., LTD. All RightsReserved.

Fig.92. TRAVEL MOTOR

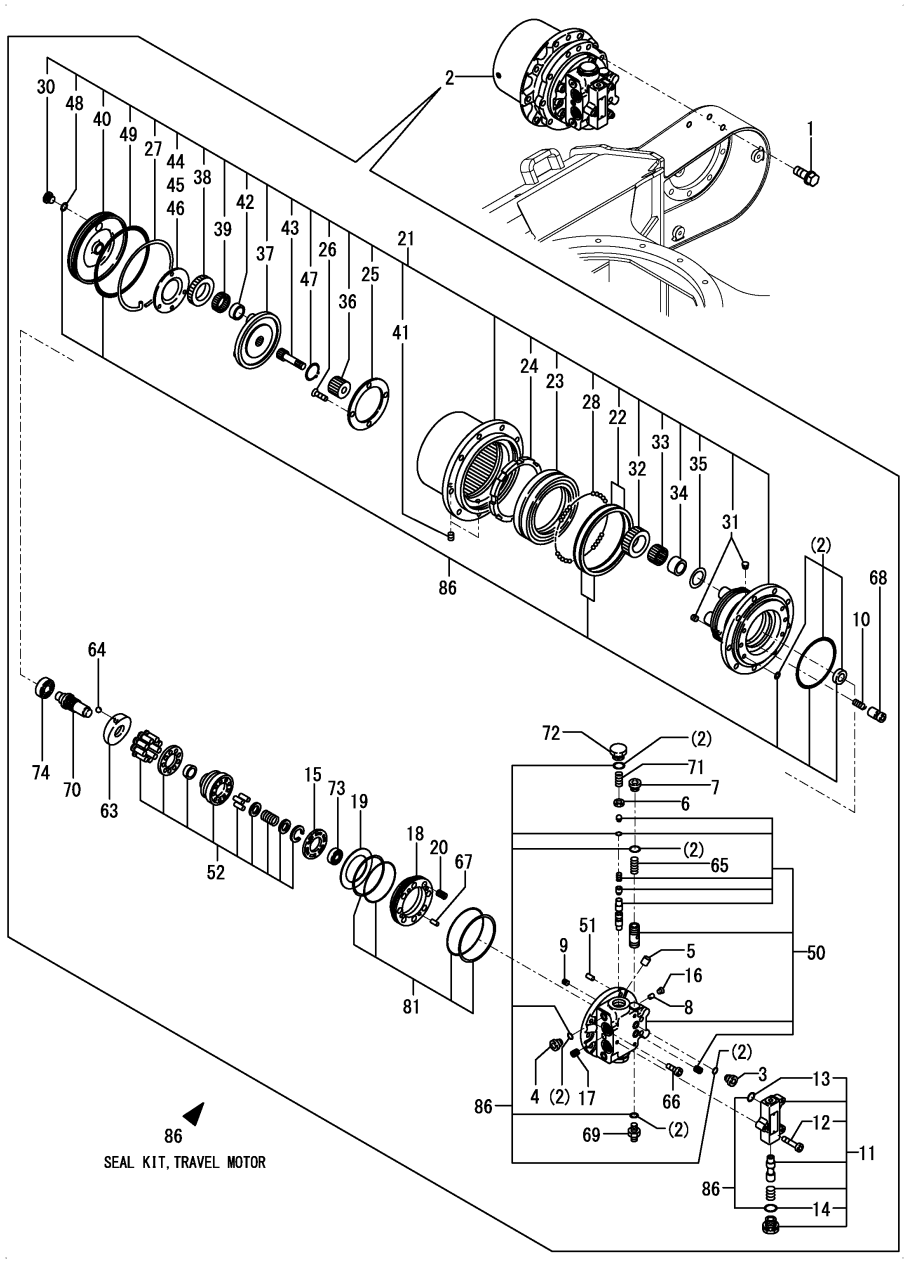

(A)=VIO35-6A P(US)
(B)=VIO35-6A C(US)
(C)=
(D)=
(E)=
(F)=

No.	Lev.	Parts No.	Description	Q'ty (A)	(B)	(C)	(D)	(E)	(F)	I	R
1	1	26013-120302	BOLT, SPRING M12X 30	18	18						
2	1	172B03-73300	MOTOR ASSY, TRAVEL	2	2						
3	2	1A6240-37360	PLUG	4	4						
4	2	172148-70301	PLUG	4	4						
5	2	172148-70340	ORIFICE	8	8						
6	2	172122-70460	SEAT, SPRING	4	4						
7	2	172147-70500	PLUG	2	2						
8	2	172312-74790	ORIFICE	8	8						
9	2	172312-74790	ORIFICE	4	4						
10	2	172168-71951	SPRING	4	4						
11	2	172B03-73320	VALVE ASSY	2	2						
12	3	172A47-73320	BOLT, SOCKET HEAD	6	6						
13	3	24315-000120	O-RING, 1BP12.0	6	6						
14	3	24315-000140	O-RING, 1BP14.0	4	4						
15	2	172638-73330	PLATE, VALVE	2	2						
16	2	172B03-73330	PLUG	6	6						
17	2	172B03-73340	PLUG, M10X1.5	2	2						
18	2	172B03-73350	PISTON, BRAKE	2	2						
19	2	172B03-73360	DISK	2	2						
20	2	172B03-73370	SPRING	16	16						
21	2	172B03-73410	GEAR ASSY, REDUCTION	2	2						
22	3	172141-70020	SEAL, FLOATING	2	2						
23	3	172141-70030	BEARING, ANGULAR	2	2						
24	3	172141-70041	NUT, RING	2	2						
25	3	172141-70100	PLATE, THRUST	2	2						
26	3	172141-70110	SCREW	8	8						
27	3	172141-70230	WIRE	2	2						
28	3	172122-70350	BALL, STEEL	264	264						
30	3	172147-70500	PLUG	4	4						
31	3	172450-73330	PLUG	4	4						
32	3	172450-73350	GEAR, PLANETARY	8	8						
33	3	172450-73360	BEARING, NEEDLE	8	8						
34	3	172450-73370	RACE, INNER	8	8						
35	3	172450-73380	WASHER, THRUST	8	8						
36	3	172450-73390	GEAR, SUN	2	2						
37	3	172450-73400	HOLDER	2	2						
38	3	172450-73410	GEAR, PLANETARY	6	6						
39	3	172450-73420	BEARING, NEEDLE	6	6						
40	3	172B03-73420	COVER	2	2						
41	3	172122-73430	PLUG	4	4						
42	3	172450-73430	RACE, INNER	6	6						
43	3	172450-73440	GEAR, DRIVE	2	2						
44	3	172450-73450	PLATE, THRUST	2	2						
45	3	172450-73460	PLATE, THRUST	2	2						
46	3	172450-73470	PLATE, THRUST	2	2						
47	3	22242-000350	RING, 35	2	2						
48	3	24315-000140	O-RING, 1BP14.0	4	4						
49	3	24325-001550	O-RING, 1BG155.0	2	2						
50	2	172B03-73460	REPAIR KIT, BASE P	2	2						
51	2	172122-73470	PIN	2	2						
52	2	172B03-73470	REPAIR KIT,CYL BLOCK	2	2						

Remarks
* Not applied for angle blade specification.

N:Old $\overset{\text{Yes}}{\underset{\text{No}}{\leftrightarrow}}$ New, Q:Old $\overset{\text{No}}{\underset{\text{Yes}}{\leftrightarrow}}$ New, R:Old $\overset{\text{Yes}}{\underset{\text{Yes}}{\leftrightarrow}}$ New, S:Old $\overset{\text{No}}{\underset{\text{No}}{\leftrightarrow}}$ New, W:Add, Z:Discontinued, F:Interchangeable by set, K:Q'ty Change

++ CONTINUE ++

Copyright (C) YANMAR CO., LTD. All RightsReserved.

Fig.92. TRAVEL MOTOR

(A)=VIO35-6A P(US)
(B)=VIO35-6A C(US)
(C)=
(D)=
(E)=
(F)=

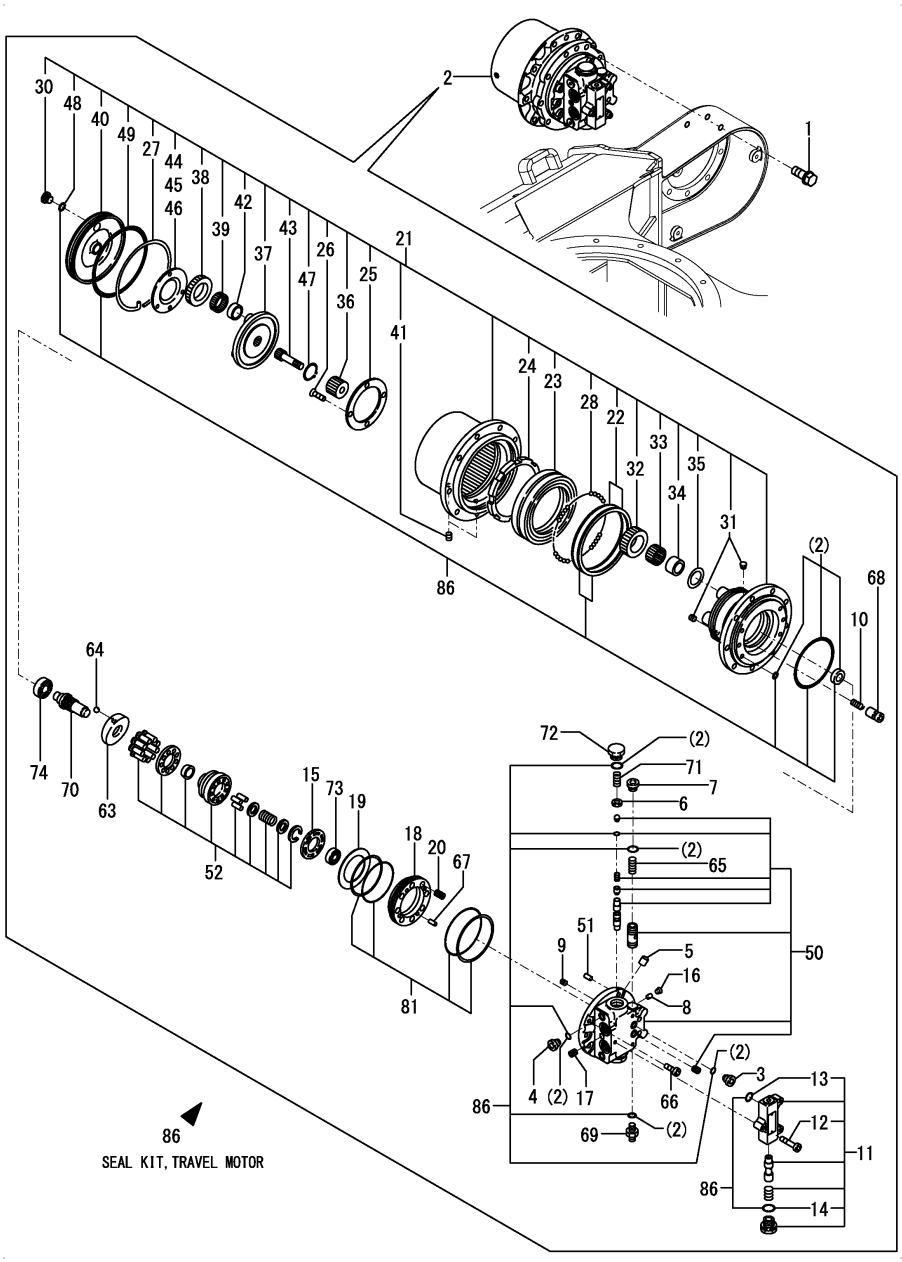

No.	Lev.	Parts No.	Description	Q'ty (A)	(B)	(C)	(D)	(E)	(F)	I	R
63	2	172450-73501	PLATE, SWASH	2	2						
64	2	172450-73510	BALL, STEEL	4	4						
65	2	172A46-73520	SPRING	2	2						
66	2	172A46-73530	BOLT, SOCKET HEAD	12	12						
67	2	172A46-73540	PIN	8	8						
68	2	172450-73551	PISTON ASSY	4	4						
69	2	172A46-73560	PLUG	2	2						
70	2	172183-73670	SHAFT	2	2						
71	2	172458-73770	SPRING	4	4						
72	2	172460-73570	CAP	4	4						
73	2	24101-060024	BEARING, BALL 6002	2	2						
74	2	24101-060044	BEARING, BALL 6004	2	2						
81	2	172B03-73480	SEAL KIT, BRAKE	2	2						
86	1	172B03-73450	SEAL KIT, TRAVEL M	2	2						

Remarks
* Not applied for angle blade specification.

N:Old $\xleftarrow[\text{No}]{\text{Yes}}$ New, Q:Old $\xleftarrow[\text{Yes}]{\text{No}}$ New, R:Old $\xleftarrow[\text{Yes}]{\text{Yes}}$ New, S:Old $\xleftarrow[\text{No}]{\text{No}}$ New, W:Add, Z:Discontinued, F:Interchangeable by set, K:Q'ty Change

Copyright (C) YANMAR CO., LTD. All RightsReserved.

Fig.164. (92A)TRAVEL MOTOR(ANGLE BLADE SPEC.)

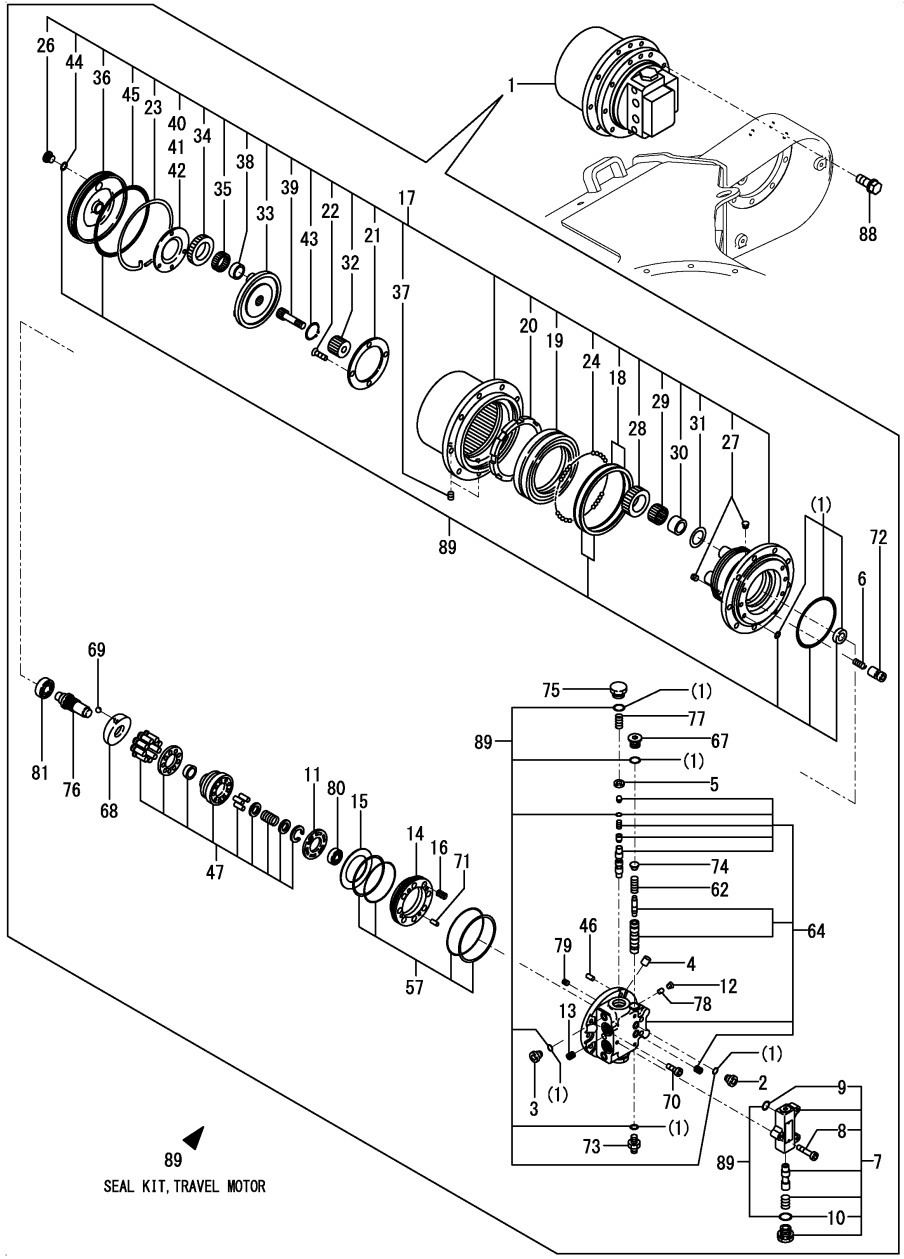

(A)=VIO35-6A P(US)
(B)=VIO35-6A C(US)
(C)=
(D)=
(E)=
(F)=

No.	Lev.	Parts No.	Description	Q'ty (A)	(B)	(C)	(D)	(E)	(F)	I	R
1	1	172B03-73310	MOTOR ASSY,TRAVEL AT	2	2						
2	2	1A6240-37360	PLUG	4	4						
3	2	172148-70301	PLUG	4	4						
4	2	172148-70340	ORIFICE	8	8						
5	2	172122-70460	SEAT, SPRING	4	4						
6	2	172168-71951	SPRING	4	4						
7	2	172B03-73320	VALVE ASSY	2	2						
8	3	172A47-73320	BOLT, SOCKET HEAD	6	6						
9	3	24315-000120	O-RING, 1BP12.0	6	6						
10	3	24315-000140	O-RING, 1BP14.0	4	4						
11	2	172638-73330	PLATE, VALVE	2	2						
12	2	172B03-73330	PLUG	6	6						
13	2	172B03-73340	PLUG, M10X1.5	2	2						
14	2	172B03-73350	PISTON, BRAKE	2	2						
15	2	172B03-73360	DISK	2	2						
16	2	172B03-73370	SPRING	16	16						
17	2	172B03-73410	GEAR ASSY, REDUCTION	2	2						
18	3	172141-70020	SEAL, FLOATING	2	2						
19	3	172141-70030	BEARING, ANGULAR	2	2						
20	3	172141-70041	NUT, RING	2	2						
21	3	172141-70100	PLATE, THRUST	2	2						
22	3	172141-70110	SCREW	8	8						
23	3	172141-70230	WIRE	2	2						
24	3	172122-70350	BALL, STEEL	264	264						
26	3	172147-70500	PLUG	4	4						
27	3	172450-73330	PLUG	4	4						
28	3	172450-73350	GEAR, PLANETARY	8	8						
29	3	172450-73360	BEARING, NEEDLE	8	8						
30	3	172450-73370	RACE, INNER	8	8						
31	3	172450-73380	WASHER, THRUST	8	8						
32	3	172450-73390	GEAR, SUN	2	2						
33	3	172450-73400	HOLDER	2	2						
34	3	172450-73410	GEAR, PLANETARY	6	6						
35	3	172450-73420	BEARING, NEEDLE	6	6						
36	3	172B03-73420	COVER	2	2						
37	3	172122-73430	PLUG	4	4						
38	3	172450-73430	RACE, INNER	6	6						
39	3	172450-73440	GEAR, DRIVE	2	2						
40	3	172450-73450	PLATE, THRUST	2	2						
41	3	172450-73460	PLATE, THRUST	2	2						
42	3	172450-73470	PLATE, THRUST	2	2						
43	3	22242-000350	RING, 35	2	2						
44	3	24315-000140	O-RING, 1BP14.0	4	4						
45	3	24325-001550	O-RING, 1BG155.0	2	2						
46	2	172122-73470	PIN	2	2						
47	2	172B03-73470	REPAIR KIT,CYL BLOCK	2	2						
57	2	172B03-73480	SEAL KIT, BRAKE	2	2						
62	2	172B05-73480	SPRING	2	2						
64	2	172B03-73490	REPAIR KIT,BASE P.AT	2	2						
67	2	172B05-73490	PLUG	2	2						
68	2	172450-73501	PLATE, SWASH	2	2						

Remarks
* Exclusive figure for angle blade specification.

N:Old $\overset{\text{Yes}}{\underset{\text{No}}{\leftrightarrow}}$ New, Q:Old $\overset{\text{No}}{\underset{\text{Yes}}{\leftrightarrow}}$ New, R:Old $\overset{\text{Yes}}{\underset{\text{Yes}}{\leftrightarrow}}$ New, S:Old $\overset{\text{No}}{\underset{\text{No}}{\leftrightarrow}}$ New, W:Add, Z:Discontinued, F:Interchangeable by set, K:Q'ty Change

++ CONTINUE ++

Copyright (C) YANMAR CO., LTD. All RightsReserved.

Fig.164. (92A)TRAVEL MOTOR(ANGLE BLADE SPEC.)

(A)=VIO35-6A P(US)
(B)=VIO35-6A C(US)
(C)=
(D)=
(E)=
(F)=

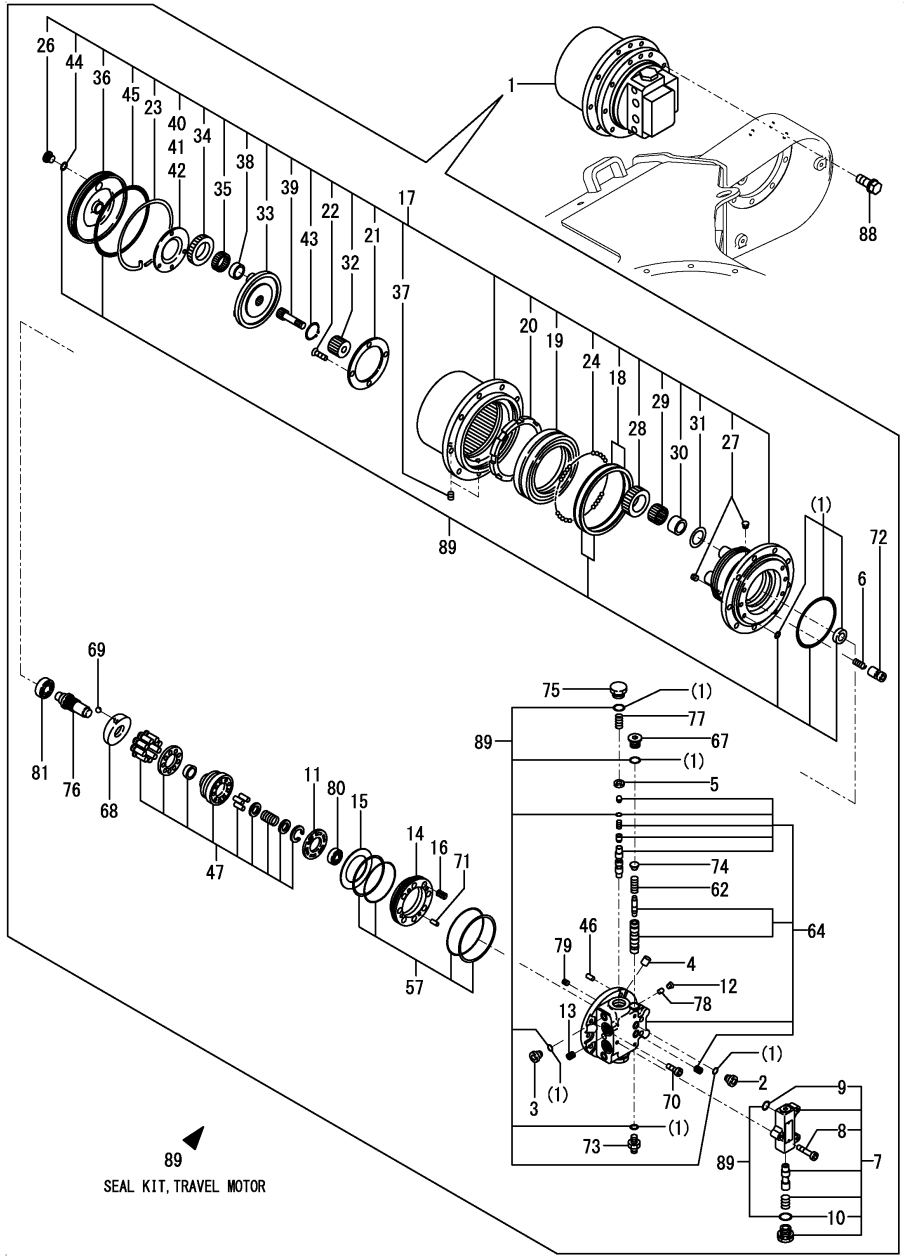

No.	Lev.	Parts No.	Description	Q'ty (A)	(B)	(C)	(D)	(E)	(F)	I	R
69	2	172450-73510	BALL, STEEL	4	4						
70	2	172A46-73530	BOLT, SOCKET HEAD	12	12						
71	2	172A46-73540	PIN	8	8						
72	2	172450-73551	PISTON ASSY	4	4						
73	2	172A46-73560	PLUG	2	2						
74	2	172B05-73560	SEAT, SPRING	2	2						
75	2	172460-73570	CAP	4	4						
76	2	172183-73670	SHAFT	2	2						
77	2	172458-73770	SPRING	4	4						
78	2	172312-74790	ORIFICE	8	8						
79	2	172312-74790	ORIFICE	4	4						
80	2	24101-060024	BEARING, BALL 6002	2	2						
81	2	24101-060044	BEARING, BALL 6004	2	2						
88	1	26013-120302	BOLT, SPRING M12X 30	18	18						
89	1	172B03-73450	SEAL KIT, TRAVEL M	2	2						

Remarks
* Exclusive figure for angle blade specification.

N:Old $\frac{\text{Yes}}{\text{No}}$ New, Q:Old $\frac{\text{No}}{\text{Yes}}$ New, R:Old $\frac{\text{Yes}}{\text{Yes}}$ New, S:Old $\frac{\text{No}}{\text{No}}$ New, W:Add, Z:Discontinued, F:Interchangeable by set, K:Q'ty Change

Copyright (C) YANMAR CO., LTD. All RightsReserved.

Fig.93. TURNING MOTOR

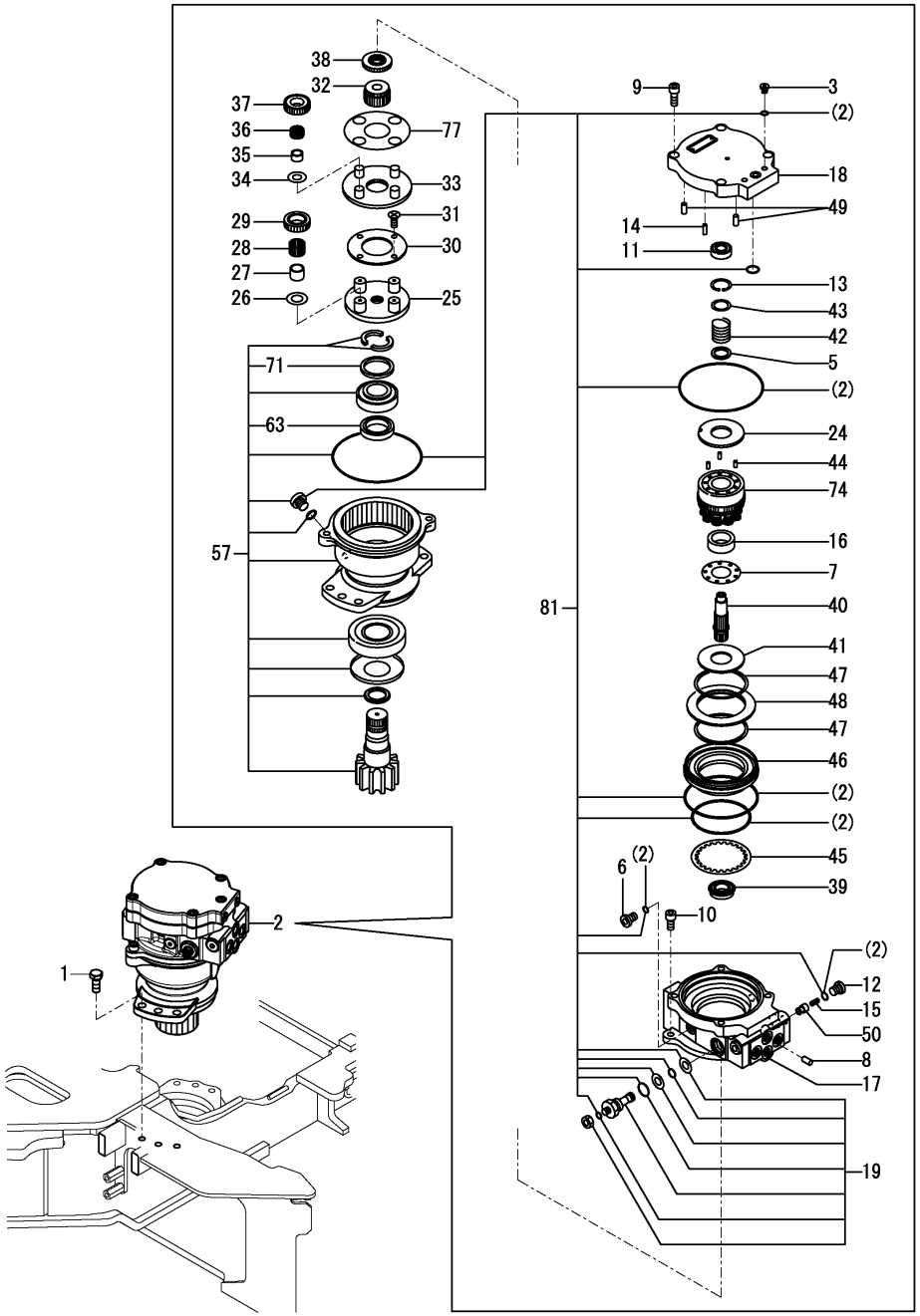

(A)=VIO35-6A P(US) (D)=
(B)=VIO35-6A C(US) (E)=
(C)= (F)=

No.	Lev.	Parts No.	Description	Q'ty (A)	(B)	(C)	(D)	(E)	(F)	I	R
1	1	172455-29140	BOLT	6	6						
2	1	172A46-73711	MOTOR ASSY, TURNING	1	1						
3	2	1A6240-37360	PLUG	2	2						
5	2	172147-70280	COLLAR	1	1						
6	2	172148-70301	PLUG	1	1						
7	2	172147-70331	HOLDER, RETAINER	1	1						
8	2	172124-70380	ORIFICE	1	1						
9	2	172124-70390	BOLT, SOCKET	5	5						
10	2	172124-70390	BOLT, SOCKET	2	2						
11	2	172147-70390	BEARING, BALL	1	1						
12	2	172147-70500	PLUG	2	2						
13	2	172122-70630	RING, SNAP	1	1						
14	2	172122-73470	PIN	1	1						
15	2	172638-73470	SPRING	2	2						
16	2	172423-73530	PLATE, RETAINER	1	1						
17	2	172A46-73730	CASE	1	1						
18	2	172459-73740	COVER	1	1						
19	2	172A46-73740	VALVE ASSY, RELIEF	2	2						
24	2	172459-73750	PLATE, VALVE	1	1						
25	2	172450-73840	HOLDER	1	1						
26	2	172450-73850	WASHER, THRUST	4	4						
27	2	172450-73860	RACE, INNER	4	4						
28	2	172450-73870	BEARING, NEEDLE	4	4						
29	2	172450-73880	GEAR, PLANETARY	4	4						
30	2	172450-73890	PLATE, THRUST	1	1						
31	2	172450-73900	SCREW	4	4						
32	2	172450-73910	GEAR, SUN	1	1						
33	2	172450-73920	HOLDER	1	1						
34	2	172450-73930	WASHER, THRUST	4	4						
35	2	172450-73940	RACE, INNER	4	4						
36	2	172450-73950	BEARING, NEEDLE	4	4						
37	2	172450-73960	GEAR, PLANETARY	4	4						
38	2	172450-77000	GEAR, DRIVE	1	1						
39	2	172450-77030	BEARING, BALL	1	1						
40	2	172450-77040	SHAFT	1	1						
41	2	172450-77050	PLATE, THRUST	1	1						
42	2	172450-77070	SPRING	1	1						
43	2	172450-77080	WASHER	1	1						
44	2	172450-77090	PIN	3	3						
45	2	172450-77110	DISK	1	1						
46	2	172450-77120	PISTON, BRAKE	1	1						
47	2	172450-77130	SEAT, SPRING	2	2						
48	2	172450-77140	SPRING ASSY, DISK	1	1						
49	2	172450-77170	PIN	2	2						
50	2	172450-77190	VALVE, CHECK	2	2						
57	2	172A46-73750	HOUSING ASSY	1	1						
63	3	172450-73751	SEAL, OIL	1	1						
71	3	172450-73830	COLLAR	1	1						
74	2	172450-77220	BLOCK KIT, CYLINDER	1	1						
77	2	172450-77230	PLATE KIT, THRUST	1	1						
81	1	172458-74910	REPAIR KIT	1	1						

N:Old $\xleftrightarrow[\text{No}]{\text{Yes}}$ New, Q:Old $\xleftrightarrow[\text{Yes}]{\text{No}}$ New, R:Old $\xleftrightarrow[\text{Yes}]{\text{Yes}}$ New, S:Old $\xleftrightarrow[\text{No}]{\text{No}}$ New, W:Add, Z:Discontinued, F:Interchangeable by set, K:Q'ty Change

Copyright (C) YANMAR CO., LTD. All RightsReserved.

Fig.94. SWIVEL JOINT(Y SPEC.)(TO M60555)

(A)=VIO35-6A P(US)
(B)=VIO35-6A C(US)
(C)=
(D)=
(E)=
(F)=

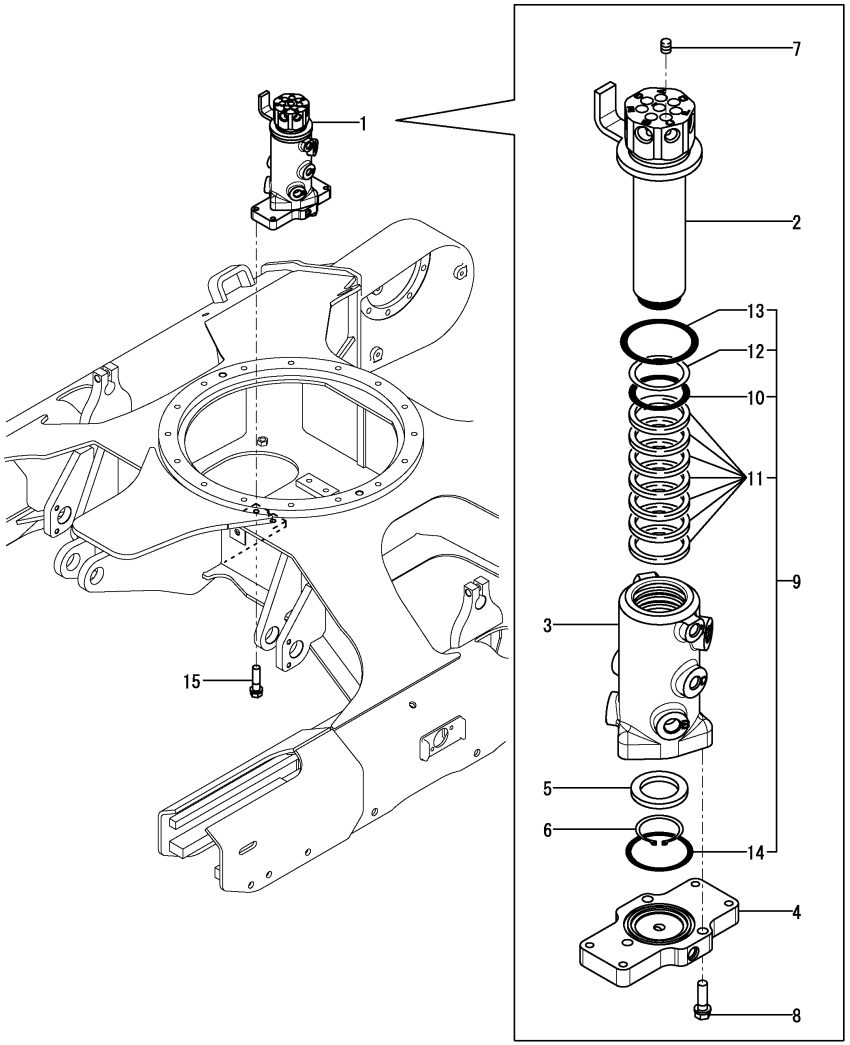

No.	Lev.	Parts No.	Description	Q'ty (A)	(B)	(C)	(D)	(E)	(F)	I	R
1	1	172B03-73800	JOINT ASSY, SWIVEL	1	1					Z	1
	(A=M60556)	(B=M60556)									
2	2	172B03-73810	SHAFT ASSY, SWING	1	1						
3	2	172444-73831	HUB, SWIVEL	1	1						
4	2	172444-73840	FLANGE, SWIVEL	1	1						
5	2	172137-73860	SPACER, SWIVEL	1	1						
6	2	22242-000451	RING, 45	1	1						
7	2	23871-020000	PLUG, R02	7	7						
8	2	26013-100352	BOLT, M10X 35	3	3						
9	2	172444-73880	SEAL SET, SWIVEL	1	1						
10	3	172142-73800	O-RING, 55.76X5.7	1	1						
11	3	172447-73840	SEAL	7	7						
12	3	172148-73870	RING, BUCK UP	1	1						
13	3	24311-000750	O-RING, 1AP75.0	1	1						
14	3	24321-000700	O-RING, 1AG70.0	1	1						
15	1	26013-100402	BOLT, M10X 40	4	4						

Remarks
* Not applied for angle blade specification.
(1)Compatibility by assembly exchang with parts of Fig.148(94A) No.1.

N:Old $\overset{\text{Yes}}{\underset{\text{No}}{\leftrightarrows}}$ New, Q:Old $\overset{\text{No}}{\underset{\text{Yes}}{\leftrightarrows}}$ New, R:Old $\overset{\text{Yes}}{\underset{\text{Yes}}{\leftrightarrows}}$ New, S:Old $\overset{\text{No}}{\underset{\text{No}}{\leftrightarrows}}$ New, W:Add, Z:Discontinued, F:Interchangeable by set, K:Q'ty Change

Copyright (C) YANMAR CO., LTD. All RightsReserved.

Fig.148. (94A)SWIVEL JOINT(N SPEC.)(FROM M60556)

(A)=VIO35-6A P(US
(B)=VIO35-6A C(US
(C)=
(D)=
(E)=
(F)=

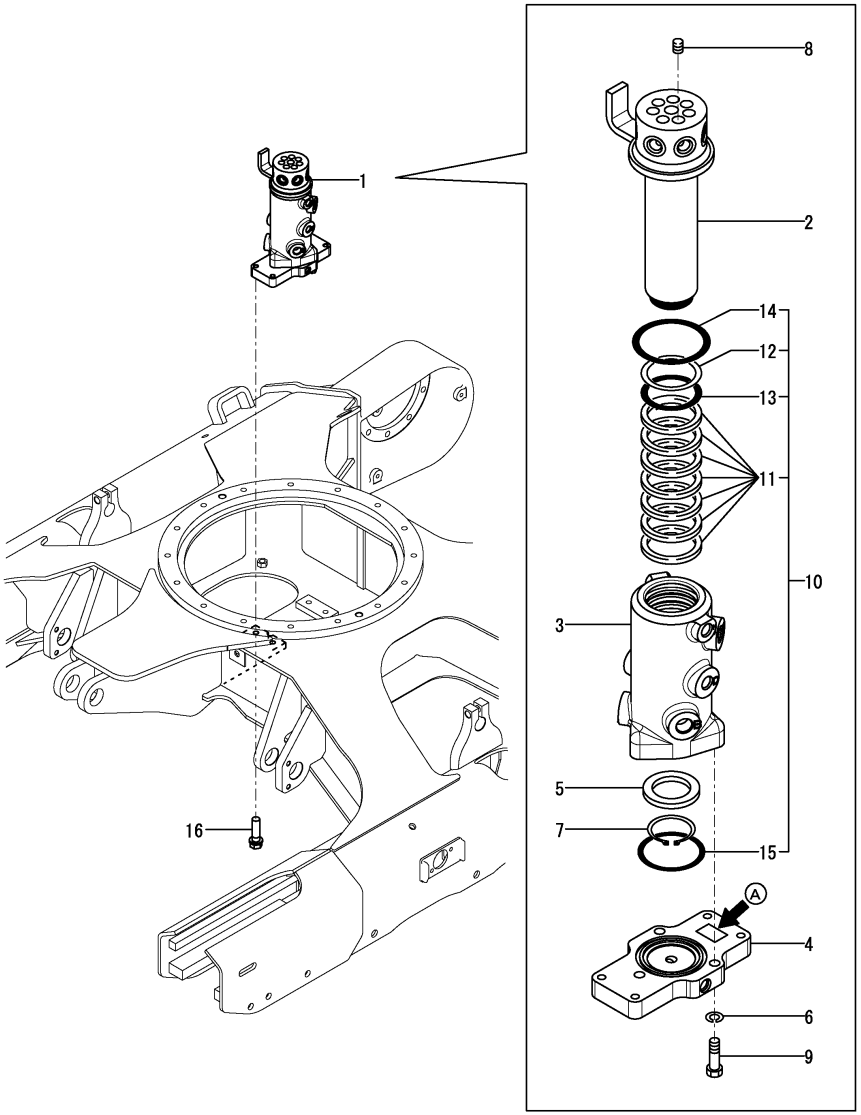

No.	Lev.	Parts No.	Description	Q'ty (A)	(B)	(C)	(D)	(E)	(F)	I	R
1	1	172B02-73800	JOINT ASSY, SWIVEL	1	1					W	1
	(A=M60556)	(B=M60556)									
2	2	172B02-73810	SHAFT ASSY, SWIVEL	1	1						
3	2	172B02-73840	HUB, SWIVEL	1	1						
4	2	172B02-73850	FLANGE, SWIVEL	1	1						
5	2	172B02-73860	SPACER, SWIVEL	1	1						
6	2	22217-100000	WASHER, SPRING 10	3	3						
7	2	22242-000451	RING, 45	1	1						
8	2	23871-020000	PLUG, R02	7	7						
9	2	26076-100352	BOLT, 10.910X 35	3	3						
10	2	172B02-73900	SEAL KIT, SWIVEL	1	1						
10-1	1	172B02-73910	SEAL KIT, SWIVEL	1	1					N	
	(A=*2014.04)	(B=*2014.04)									
11	3	172B02-73870	SEAL, SWIVEL	7	7						
11-1	2	172B02-73890	SEAL, SWIVEL	7	7					N	
	(A=*2014.04)	(B=*2014.04)									
12	3	172B02-73880	RING, BACKUP T3 55	1	1						
13	3	24315-000560	O-RING, 1BP56.0	1	1						
14	3	24315-000750	O-RING, 1BP75.0	1	1						
15	3	24325-000700	O-RING, 1BG70.0	1	1						
16	1	26013-100402	BOLT, M10X 40	4	4						

Remarks
* Not applied for angle blade specification.
(1)A : 'NACHI' label.

N:Old $\frac{\text{Yes}}{\text{No}}$ New, Q:Old $\frac{\text{No}}{\text{Yes}}$ New, R:Old $\frac{\text{Yes}}{\text{Yes}}$ New, S:Old $\frac{\text{No}}{\text{No}}$ New, W:Add, Z:Discontinued, F:Interchangeable by set, K:Q'ty Change

Copyright (C) YANMAR CO., LTD. All RightsReserved.

Fig.165. (94B)SWIVEL JOINT(ANGLE BLADE SPEC.)

(A)=VIO35-6A P(US)
(B)=VIO35-6A C(US)
(C)=
(D)=
(E)=
(F)=

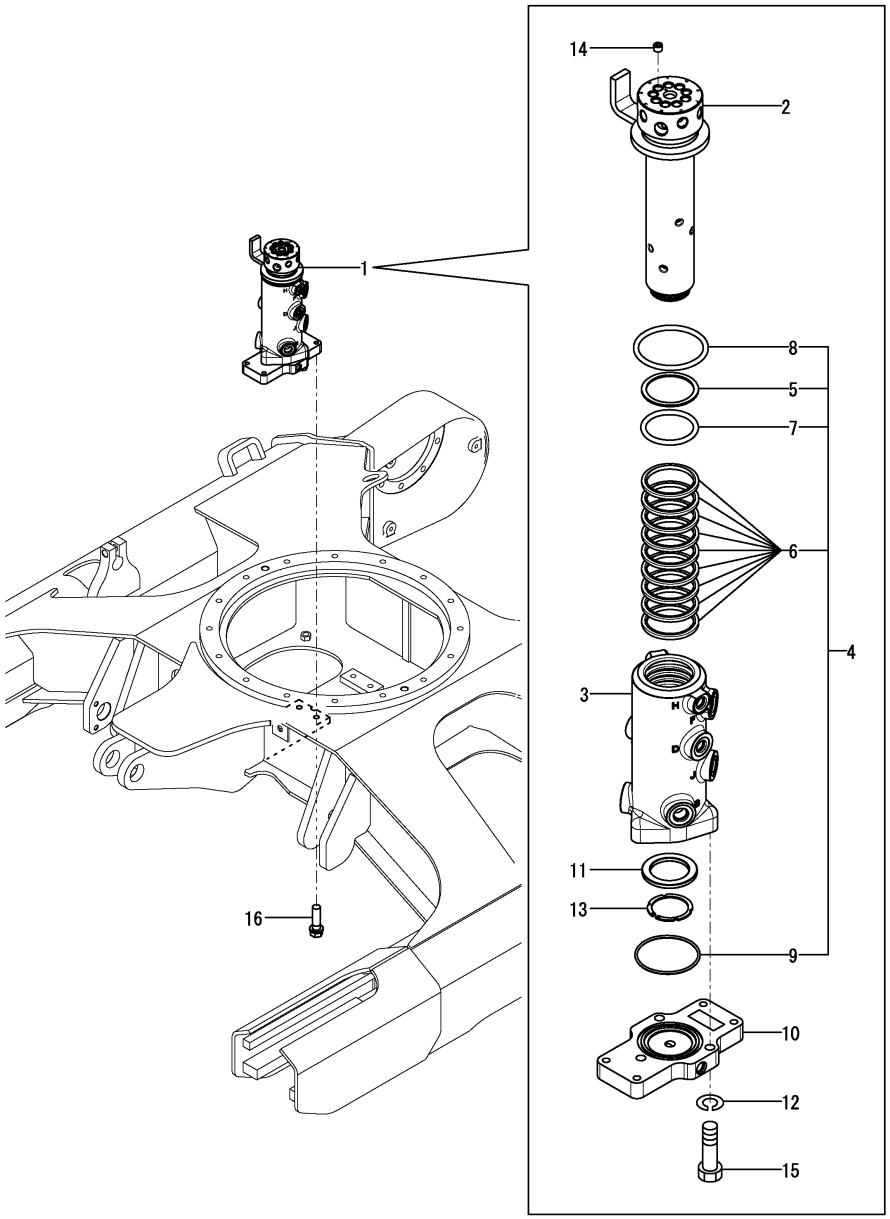

No.	Lev.	Parts No.	Description	Q'ty (A)	(B)	(C)	(D)	(E)	(F)	I	R
1	1	172A79-73700	JOINT ASSY, SWIVEL	1	1						
2	2	172A79-73710	SHAFT ASSY,SWIVEL	1	1						
3	2	172A79-73720	ROTOR	1	1						
4	2	172A79-73790	SEAL KIT, SWIVEL	1	1						
5	3	172B02-73880	RING, BACKUP T3 55	1	1						
6	3	172B02-73890	SEAL, SWIVEL	9	9						
7	3	24315-000560	O-RING, 1BP56.0	1	1						
8	3	24315-000750	O-RING, 1BP75.0	1	1						
9	3	24325-000700	O-RING, 1BG70.0	1	1						
10	2	172B02-73850	FLANGE, SWIVEL	1	1						
11	2	172B02-73860	SPACER, SWIVEL	1	1						
12	2	22217-100000	WASHER, SPRING 10	3	3						
13	2	22242-000451	RING, 45	1	1						
14	2	23871-010000	PLUG, R01	9	9						
15	2	26076-100352	BOLT, 10.910X 35	3	3						
16	1	26013-100402	BOLT, M10X 40	4	4						

Remarks
* Exclusive figure for angle blade specification.

N:Old $\frac{\text{Yes}}{\text{No}}$ New, Q:Old $\frac{\text{No}}{\text{Yes}}$ New, R:Old $\frac{\text{Yes}}{\text{Yes}}$ New, S:Old $\frac{\text{No}}{\text{No}}$ New, W:Add, Z:Discontinued, F:Interchangeable by set, K:Q'ty Change

Copyright (C) YANMAR CO., LTD. All RightsReserved.

Fig.95. CONTROL VALVE(1/7)

(A)=VIO35-6A P(US)
(B)=VIO35-6A C(US)
(C)=
(D)=
(E)=
(F)=

No.	Lev.	Parts No.	Description	Q'ty (A)	(B)	(C)	(D)	(E)	(F)	I	R
1	1	172B03-74121	VALVE ASSY,CV EX	1	1						
2	1	26013-100162	BOLT, M10X 16	3	3						

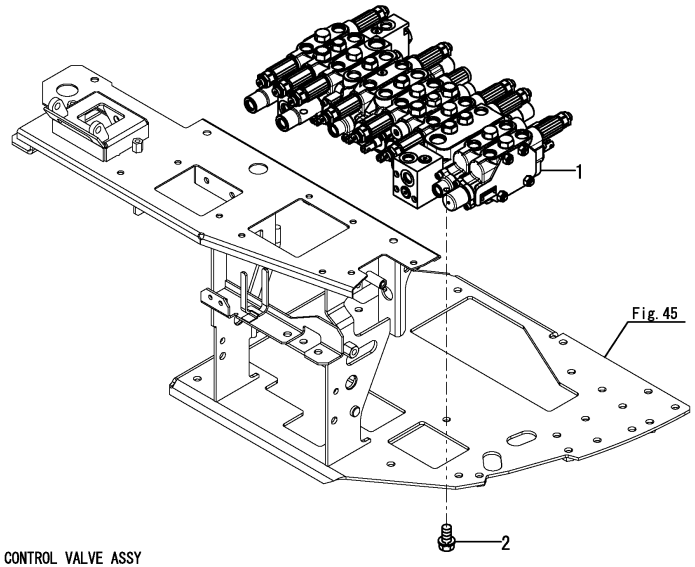

CONTROL VALVE ASSY
Fig.95 Ref.No.1.
INC.Fig.96～101.

CONTROL VALVE

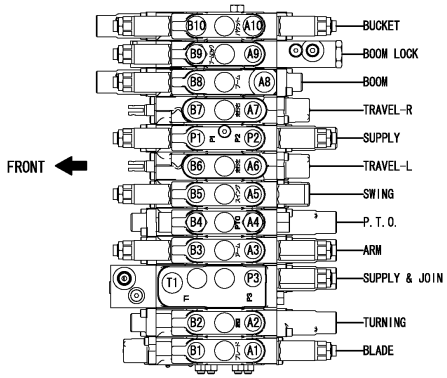

Remarks
* Not applied for angle blade specification.

N:Old ←Yes/No→ New, Q:Old ←No/Yes→ New, R:Old ←Yes/Yes→ New, S:Old ←No/No→ New, W:Add, Z:Discontinued, F:Interchangeable by set, K:Q'ty Change

Copyright (C) YANMAR CO., LTD. All RightsReserved.

Fig.96. CONTROL VALVE(2/7)

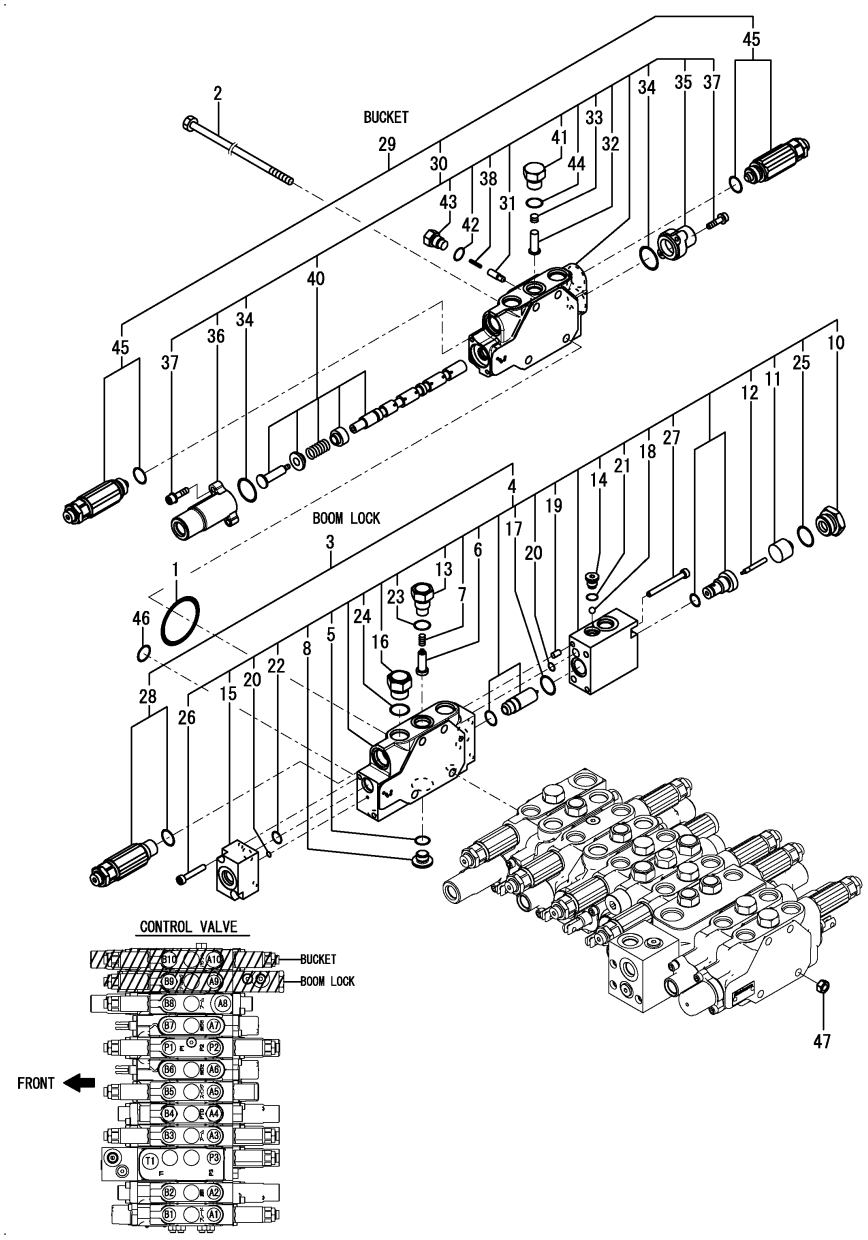

(A)=VIO35-6A P(US)
(B)=VIO35-6A C(US)
(C)=
(D)=
(E)=
(F)=

No.	Lev.	Parts No.	Description	Q'ty (A)	(B)	(C)	(D)	(E)	(F)	I	R
1	2	172458-74720	O-RING	11	11						
2	2	172458-74730	BOLT	4	4						
3	2	172B02-74890	VALVE ASSY, LOCK	1	1						
4	3	172B02-74450	SECTION ASSY, LOCK	1	1						
5	4	172A47-74270	O-RING	1	1						
6	4	172458-74290	VALVE, REVERSE	1	1						
7	4	172458-74360	SPRING, VALVE	1	1						
8	4	172A47-74460	PLUG	1	1						
10	4	172A47-74560	BUSH PF1/2X1/4	1	1						
11	4	172A47-74570	PISTON B	1	1						
12	4	172A47-74580	PISTON A1	1	1						
13	4	172458-74640	STAY, VALVE	1	1						
14	4	172A47-74920	HOLDER, BALL	1	1						
15	4	172A47-74930	BODY, DISCHARGE	1	1						
16	4	172A47-75620	STAY, VALVE	1	1						
17	4	172A47-75680	O-RING	1	1						
18	4	172A47-75690	BALL, STEEL	1	1						
19	4	22312-050100	PIN, PARALLEL M5X10	2	2						
20	4	24311-000060	O-RING, 1AP6.0	2	2						
21	4	24315-000080	O-RING, 1BP8.0	1	1						
22	4	24315-000100	O-RING, 1BP10.0	1	1						
23	4	24315-000110	O-RING, 1BP11.0	1	1						
24	4	24315-000140	O-RING, 1BP14.0	1	1						
25	4	24315-000180	O-RING, 1BP18.0	1	1						
26	4	26450-050302	BOLT, M5X 30	2	2						
27	4	26450-060652	BOLT, M6X 65	2	2						
28	3	172B02-74760	RELIEF ASSY,ORV 29.4	1	1						
28-1	3	172456-74440	VALVE, RELIEF	1	1					R	
	(A=*2013.10)		(B=*2013.10)								
29	2	172B02-74900	VALVE ASSY, BUCKET	1	1						
30	3	172B02-74470	SECTION ASSY, BUCKET	1	1						
31	4	172499-70180	VALVE ASSY, REVERSE	1	1						
32	4	172458-74150	VALVE, REVERSE	1	1						
33	4	172458-74160	SPRING, VALVE	1	1						
34	4	172458-74230	O-RING	2	2						
35	4	172458-74240	COVER, PILOT	1	1						
36	4	172458-74250	COVER, PILOT	1	1						
37	4	172458-74260	BOLT	4	4						
38	4	172173-74280	SPRING	1	1						
40	4	172B02-74490	SPOOL ASSY, BUCKET	1	1						
41	4	172458-74630	STAY, VALVE	1	1						
42	4	172A47-74950	O-RING	1	1						
43	4	172A47-74970	STAY, VALVE	1	1						
44	4	24315-000110	O-RING, 1BP11.0	1	1						
45	3	172B02-74750	RELIEF ASSY,ORV 25.5	2	2						
46	2	24311-000200	O-RING, 1AP20.0	11	11						
47	2	26716-080002	NUT, M8	4	4						

Remarks
* Not applied for angle blade specification.
* Control valve assy is shown in Fig.95.

N:Old $\frac{\text{Yes}}{\text{No}}$ New, Q:Old $\frac{\text{No}}{\text{Yes}}$ New, R:Old $\frac{\text{Yes}}{\text{Yes}}$ New, S:Old $\frac{\text{No}}{\text{No}}$ New, W:Add, Z:Discontinued, F:Interchangeable by set, K:Q'ty Change

Copyright (C) YANMAR CO., LTD. All RightsReserved.

Fig.97. CONTROL VALVE(3/7)

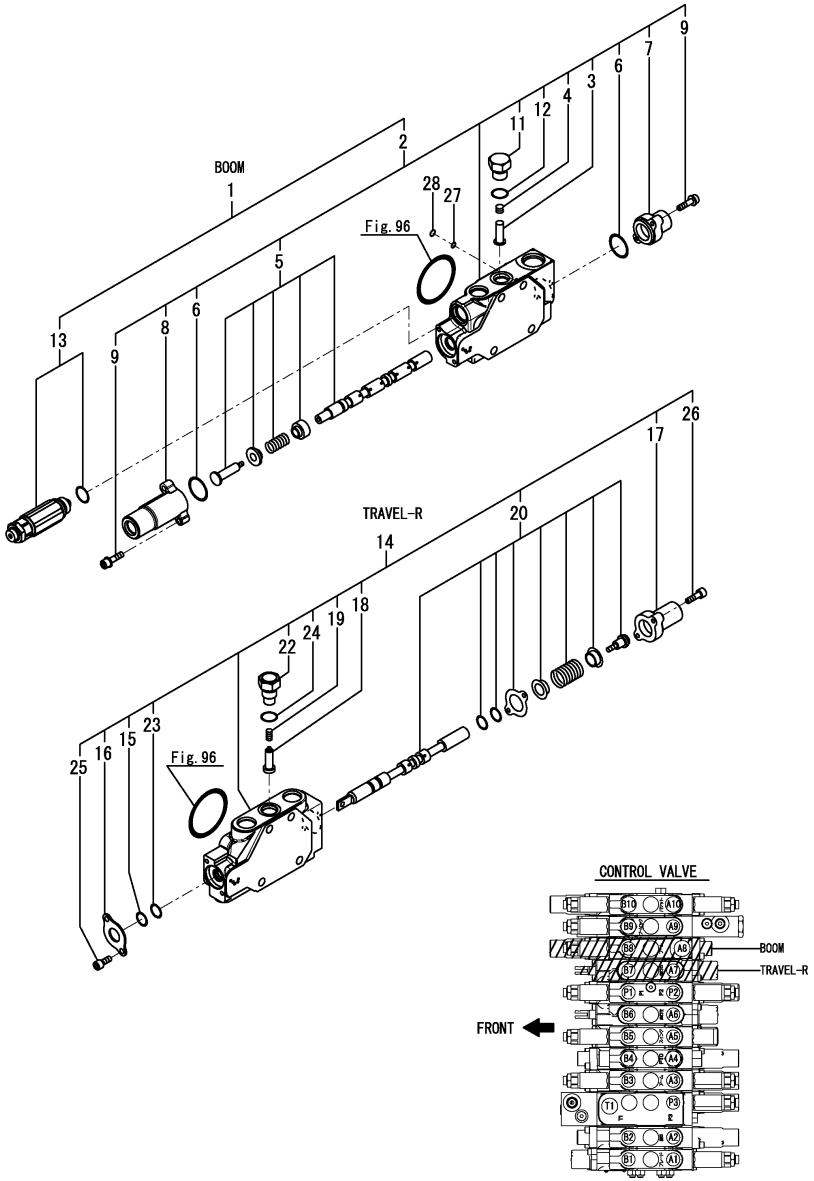

(A)=VIO35-6A P(US)
(B)=VIO35-6A C(US)
(C)=
(D)=
(E)=
(F)=

No.	Lev.	Parts No.	Description	Q'ty (A)	(B)	(C)	(D)	(E)	(F)	I	R
1	2	172B03-74240	VALVE ASSY, BOOM	1	1						
2	3	172B03-74180	SECTION ASSY, BOOM	1	1						
3	4	172458-74150	VALVE, REVERSE	1	1						
4	4	172458-74160	SPRING, VALVE	1	1						
5	4	172B03-74190	SPOOL ASSY, BOOM	1	1						
6	4	172458-74230	O-RING	2	2						
7	4	172458-74240	COVER, PILOT	1	1						
8	4	172458-74250	COVER, PILOT	1	1						
9	4	172458-74260	BOLT	4	4						
11	4	172458-74630	STAY, VALVE	1	1						
12	4	24315-000110	O-RING, 1BP11.0	1	1						
13	3	172B03-74280	RELIEF ASSY,ORV 25	1	1						
14	2	172B02-74400	SECTION ASSY,TRAVEL2	1	1						
15	3	172458-74130	WIPER, DUST	1	1						
16	3	172458-74140	RETAINER, SEAL	1	1						
17	3	172458-74170	CAP, SPRING	1	1						
18	3	172458-74290	VALVE, REVERSE	1	1						
19	3	172458-74360	SPRING, VALVE	1	1						
20	3	172B02-74370	SPOOL ASSY, TRAVEL	1	1						
22	3	172458-74640	STAY, VALVE	1	1						
23	3	24311-000120	O-RING, 1AP12.0	1	1						
24	3	24315-000110	O-RING, 1BP11.0	1	1						
25	3	26450-050102	BOLT, M5X 10	2	2						
26	3	26450-050182	BOLT, M5X 18	2	2						
27	2	24315-000090	O-RING, 1BP9.0	1	1						
28	2	24315-000100	O-RING, 1BP10.0	1	1						

Remarks
* Not applied for angle blade specification.
* Control valve assy is shown in Fig.95.

N:Old $\frac{\text{Yes}}{\text{No}}$ New, Q:Old $\frac{\text{No}}{\text{Yes}}$ New, R:Old $\frac{\text{Yes}}{\text{Yes}}$ New, S:Old $\frac{\text{No}}{\text{No}}$ New, W:Add, Z:Discontinued, F:Interchangeable by set, K:Q'ty Change

Copyright (C) YANMAR CO., LTD. All RightsReserved.

Fig.98. CONTROL VALVE(4/7)

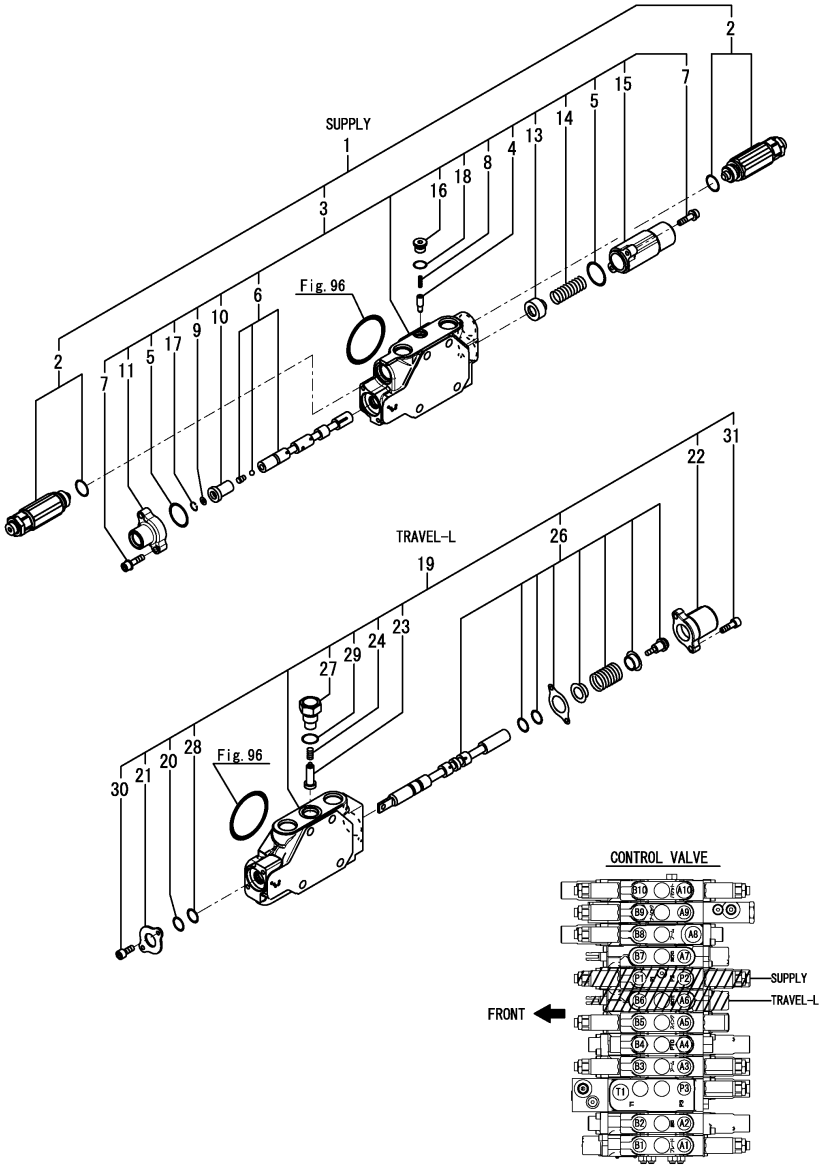

(A)=VIO35-6A P(US)
(B)=VIO35-6A C(US)
(C)=
(D)=
(E)=
(F)=

No.	Lev.	Parts No.	Description	Q'ty (A)	(B)	(C)	(D)	(E)	(F)	I	R
1	2	172B03-74230	VALVE ASSY, INLET	1	1						
2	3	172B03-74260	RELIEF ASSY, 23.1	2	2						
3	3	172B02-74380	SECTION ASSY, INLET	1	1						
4	4	172499-70180	VALVE ASSY, REVERSE	1	1						
5	4	172458-74230	O-RING	2	2						
6	4	172A46-74250	SPOOL ASSY, INLET	1	1						
7	4	172458-74260	BOLT	4	4						
8	4	172173-74280	SPRING	1	1						
9	4	172A47-74360	FILTER	1	1						
10	4	172A47-74370	PISTON	1	1						
11	4	172A47-74380	COVER, PILOT	1	1						
13	4	172458-74530	SEAT, SPRING	1	1						
14	4	172458-74540	SPRING, RETURN	1	1						
15	4	172458-74550	COVER, PILOT	1	1						
16	4	172458-74670	PLUG	1	1						
17	4	172A47-74980	CIRCLIP	1	1						
18	4	24315-000080	O-RING, 1BP8.0	1	1						
19	2	172B02-74350	SECTION ASSY,TRAVEL1	1	1						
20	3	172458-74130	WIPER, DUST	1	1						
21	3	172458-74140	RETAINER, SEAL	1	1						
22	3	172458-74170	CAP, SPRING	1	1						
23	3	172458-74290	VALVE, REVERSE	1	1						
24	3	172458-74360	SPRING, VALVE	1	1						
26	3	172B02-74370	SPOOL ASSY, TRAVEL	1	1						
27	3	172458-74640	STAY, VALVE	1	1						
28	3	24311-000120	O-RING, 1AP12.0	1	1						
29	3	24315-000110	O-RING, 1BP11.0	1	1						
30	3	26450-050102	BOLT, M5X 10	2	2						
31	3	26450-050182	BOLT, M5X 18	2	2						

Remarks
* Not applied for angle blade specification.
* Control valve assy is shown in Fig.95.

N:Old $\frac{\text{Yes}}{\text{No}}$ New, Q:Old $\frac{\text{No}}{\text{Yes}}$ New, R:Old $\frac{\text{Yes}}{\text{Yes}}$ New, S:Old $\frac{\text{No}}{\text{No}}$ New, W:Add, Z:Discontinued, F:Interchangeable by set, K:Q'ty Change

Copyright (C) YANMAR CO., LTD. All RightsReserved.

Fig.99. CONTROL VALVE(5/7)

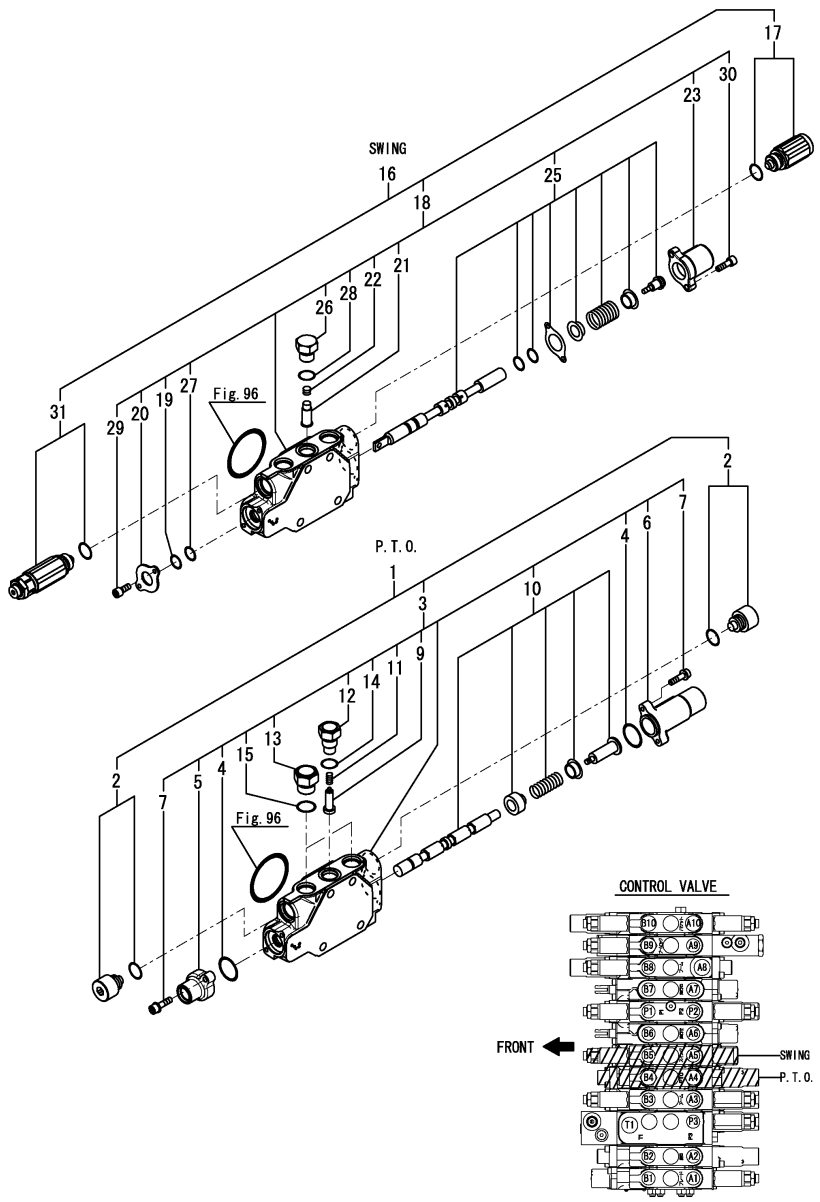

(A)=VIO35-6A P(US)
(B)=VIO35-6A C(US)
(C)=
(D)=
(E)=
(F)=

No.	Lev.	Parts No.	Description	Q'ty (A)	(B)	(C)	(D)	(E)	(F)	I	R
1	2	172B02-74850	VALVE ASSY, PTO	1	1						
2	3	172456-74290	RELIEF VALVE PLUG	2	2						
2-1	3	172A47-75460	PLUG ASSY, VALVE	2	2					R	
	(A=*2013.10)	(B=*2013.10)									
3	3	172B02-74290	SECTION ASSY, PTO	1	1						
4	4	172458-74230	O-RING	2	2						
5	4	172458-74240	COVER, PILOT	1	1						
6	4	172458-74250	COVER, PILOT	1	1						
7	4	172458-74260	BOLT	4	4						
9	4	172490-74310	VALVE, REVERSE	1	1						
10	4	172B02-74310	SPOOL ASSY, PTO	1	1						
11	4	172490-74320	SPRING, VALVE	1	1						
12	4	172490-74330	STAY, VALVE	1	1						
13	4	172A47-75620	STAY, VALVE	2	2						
14	4	24315-000110	O-RING, 1BP11.0	1	1						
15	4	24315-000140	O-RING, 1BP14.0	2	2						
16	2	172B02-74860	VALVE ASSY, B SWING	1	1						
17	3	172447-74230	ANTI-CAVITATION	1	1						
18	3	172B02-74320	SECTION ASSY,B SWING	1	1						
19	4	172458-74130	WIPER, DUST	1	1						
20	4	172458-74140	RETAINER, SEAL	1	1						
21	4	172458-74150	VALVE, REVERSE	1	1						
22	4	172458-74160	SPRING, VALVE	1	1						
23	4	172458-74170	CAP, SPRING	1	1						
25	4	172B02-74340	SPOOL ASSY, B SWING	1	1						
26	4	172458-74630	STAY, VALVE	1	1						
27	4	24311-000120	O-RING, 1AP12.0	1	1						
28	4	24315-000110	O-RING, 1BP11.0	1	1						
29	4	26450-050102	BOLT, M5X 10	2	2						
30	4	26450-050182	BOLT, M5X 18	2	2						
31	3	172B02-74750	RELIEF ASSY,ORV 25.5	1	1						

Remarks
* Not applied for angle blade specification.
* Control valve assy is shown in Fig.95.

N:Old $\frac{\text{Yes}}{\text{No}}$ New, Q:Old $\frac{\text{No}}{\text{Yes}}$ New, R:Old $\frac{\text{Yes}}{\text{Yes}}$ New, S:Old $\frac{\text{No}}{\text{No}}$ New, W:Add, Z:Discontinued, F:Interchangeable by set, K:Q'ty Change

Copyright (C) YANMAR CO., LTD. All RightsReserved.

Fig.100. CONTROL VALVE(6/7)

(A)=VIO35-6A P(US)
(B)=VIO35-6A C(US)
(C)=
(D)=
(E)=
(F)=

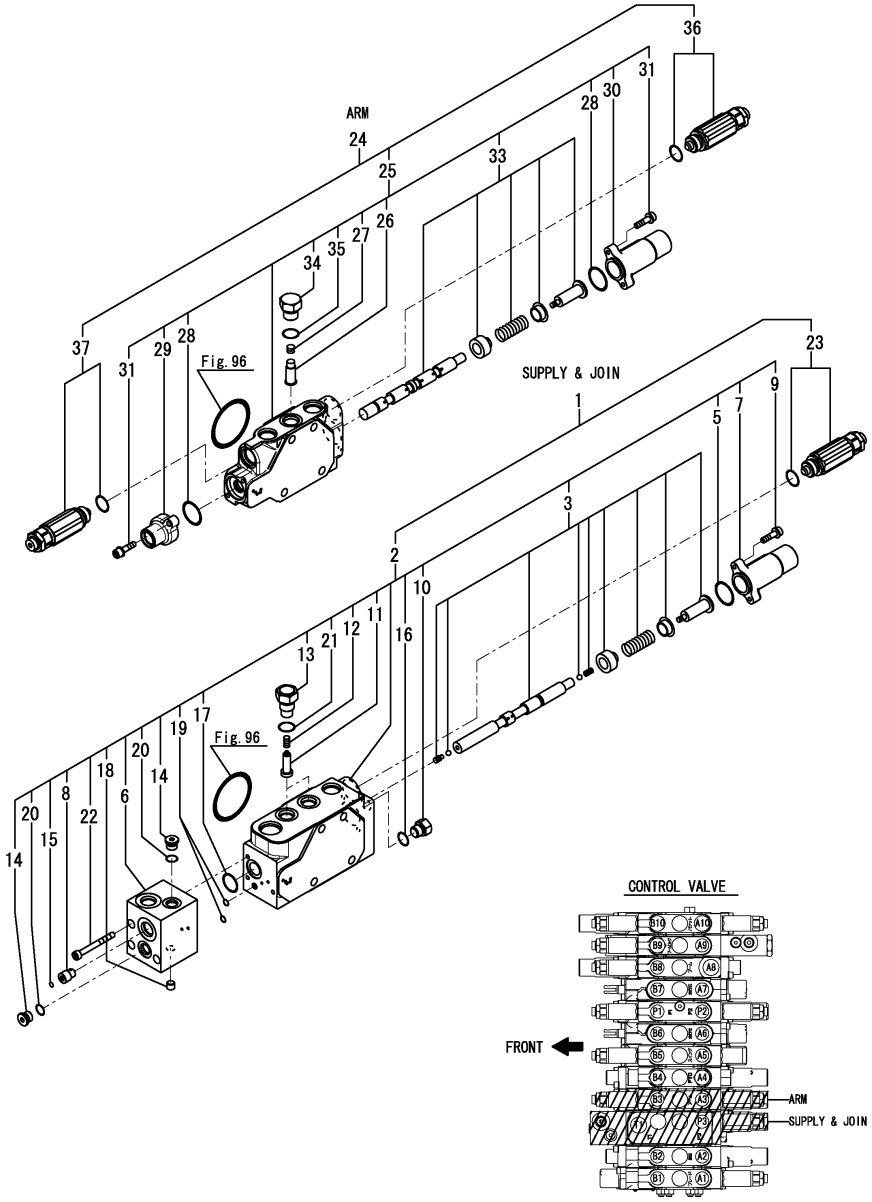

No.	Lev.	Parts No.	Description	Q'ty (A)	(B)	(C)	(D)	(E)	(F)	I	R
1	2	172B03-74210	VALVE ASSY, CONFLUX	1	1						
2	3	172B03-74160	SECTION ASSY,CONFLUX	1	1						
3	4	172B03-74170	SPOOL ASSY, CONFLUX	1	1						
5	4	172458-74230	O-RING	1	1						
6	4	172B02-74240	BLOCK, PILOT	1	1						
7	4	172458-74250	COVER, PILOT	1	1						
8	4	172B02-74250	PLUG, THROTTLE	1	1						
9	4	172458-74260	BOLT	2	2						
10	4	172A47-74260	PLUG	1	1						
11	4	172458-74290	VALVE, REVERSE	2	2						
12	4	172458-74360	SPRING, VALVE	2	2						
13	4	172458-74640	STAY, VALVE	2	2						
14	4	172458-74670	PLUG	2	2						
15	4	172499-74860	FILTER	1	1						
16	4	172A47-74950	O-RING	1	1						
17	4	172A47-75680	O-RING	1	1						
18	4	172A47-75720	PLUG	1	1						
19	4	24315-000050	O-RING, 1BP5.0	2	2						
20	4	24315-000080	O-RING, 1BP8.0	2	2						
21	4	24315-000110	O-RING, 1BP11.0	2	2						
22	4	26450-050502	BOLT, M5X 50	3	3						
23	3	172B03-74270	RELIEF ASSY, 21.1	1	1						
24	2	172B03-74220	VALVE ASSY, ARM	1	1						
25	3	172B02-74260	SECTION ASSY, ARM	1	1						
26	4	172458-74150	VALVE, REVERSE	1	1						
27	4	172458-74160	SPRING, VALVE	1	1						
28	4	172458-74230	O-RING	2	2						
29	4	172458-74240	COVER, PILOT	1	1						
30	4	172458-74250	COVER, PILOT	1	1						
31	4	172458-74260	BOLT	4	4						
33	4	172B02-74280	SPOOL ASSY, ARM	1	1						
34	4	172458-74630	STAY, VALVE	1	1						
35	4	24315-000110	O-RING, 1BP11.0	1	1						
36	3	172B03-74280	RELIEF ASSY,ORV 25	1	1						
37	3	172B02-74750	RELIEF ASSY,ORV 25.5	1	1						

Remarks
* Not applied for angle blade specification.
* Control valve assy is shown in Fig.95.

N:Old $\frac{\text{Yes}}{\text{No}}$ New, Q:Old $\frac{\text{No}}{\text{Yes}}$ New, R:Old $\frac{\text{Yes}}{\text{Yes}}$ New, S:Old $\frac{\text{No}}{\text{No}}$ New, W:Add, Z:Discontinued, F:Interchangeable by set, K:Q'ty Change

Copyright (C) YANMAR CO., LTD. All RightsReserved.

Fig.101. CONTROL VALVE(7/7)

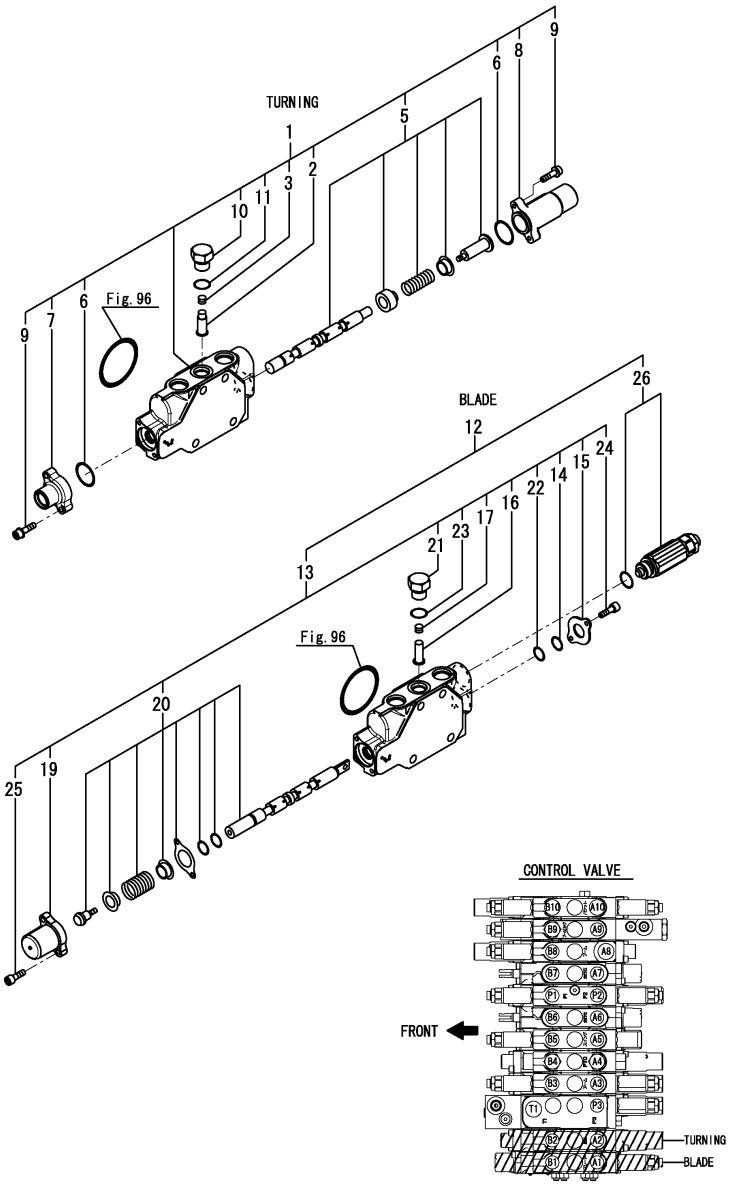

(A)=VIO35-6A P(US)
(B)=VIO35-6A C(US)
(C)=
(D)=
(E)=
(F)=

No.	Lev.	Parts No.	Description	Q'ty (A)	(B)	(C)	(D)	(E)	(F)	I	R
1	2	172B02-74180	SECTION ASSY, SWING	1	1						
2	3	172458-74150	VALVE, REVERSE	1	1						
3	3	172458-74160	SPRING, VALVE	1	1						
5	3	172B02-74200	SPOOL ASSY, SWING	1	1						
6	3	172458-74230	O-RING	2	2						
7	3	172458-74240	COVER, PILOT	1	1						
8	3	172458-74250	COVER, PILOT	1	1						
9	3	172458-74260	BOLT	4	4						
10	3	172458-74630	STAY, VALVE	1	1						
11	3	24315-000110	O-RING, 1BP11.0	1	1						
12	2	172B02-74820	VALVE ASSY, BLADE	1	1						
13	3	172B02-74150	SECTION ASSY, BLADE	1	1						
14	4	172458-74130	WIPER, DUST	1	1						
15	4	172458-74140	RETAINER, SEAL	1	1						
16	4	172458-74150	VALVE, REVERSE	1	1						
17	4	172458-74160	SPRING, VALVE	1	1						
19	4	172458-74170	CAP, SPRING	1	1						
20	4	172B02-74170	SPOOL ASSY, BLADE	1	1						
21	4	172458-74630	STAY, VALVE	1	1						
22	4	24311-000120	O-RING, 1AP12.0	1	1						
23	4	24315-000110	O-RING, 1BP11.0	1	1						
24	4	26450-050102	BOLT, M5X 10	2	2						
25	4	26450-050182	BOLT, M5X 18	2	2						
26	3	172B02-74730	RELIEF ASSY,ORV 9.8	1	1						

Remarks
* Not applied for angle blade specification.
* Control valve assy is shown in Fig.95.

N:Old $\frac{\text{Yes}}{\text{No}}$ New, Q:Old $\frac{\text{No}}{\text{Yes}}$ New, R:Old $\frac{\text{Yes}}{\text{Yes}}$ New, S:Old $\frac{\text{No}}{\text{No}}$ New, W:Add, Z:Discontinued, F:Interchangeable by set, K:Q'ty Change

Copyright (C) YANMAR CO., LTD. All RightsReserved.

Fig.166. (101A)CONTROL VALVE(1/8)(ANGLE BLADE SPEC.)

(A)=VIO35-6A P(US)
(B)=VIO35-6A C(US)
(C)=
(D)=
(E)=
(F)=

No.	Lev.	Parts No.	Description	Q'ty (A)	(B)	(C)	(D)	(E)	(F)	I	R
1	1	172B03-74130	VALVE ASSY,CV ANGLE	1	1						
2	1	26013-100162	BOLT, M10X 16	3	3						

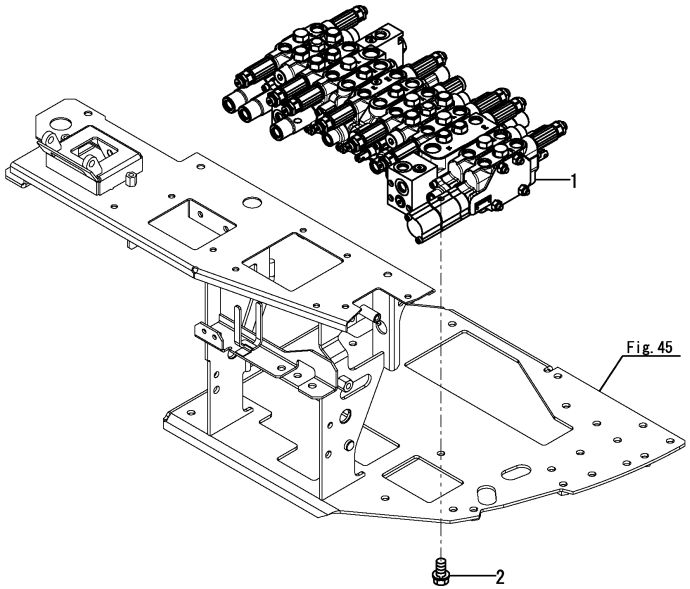

CONTROL VALVE ASSY
Fig.166 Ref.No.1.
INC.Fig.167～173.

CONTROL VALVE

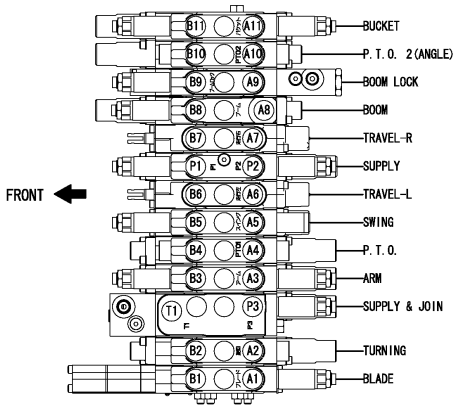

Remarks
* Exclusive figure for angle blade specification.

N:Old ←Yes/No→ New, Q:Old ←No/Yes→ New, R:Old ←Yes/Yes→ New, S:Old ←No/No→ New, W:Add, Z:Discontinued, F:Interchangeable by set, K:Q'ty Change

Copyright (C) YANMAR CO., LTD. All RightsReserved.

Fig.167. (101B)CONTROL VALVE(2/8)(ANGLE BLADE SPEC.)

(A)=VIO35-6A P(US)
(B)=VIO35-6A C(US)
(C)=
(D)=
(E)=
(F)=

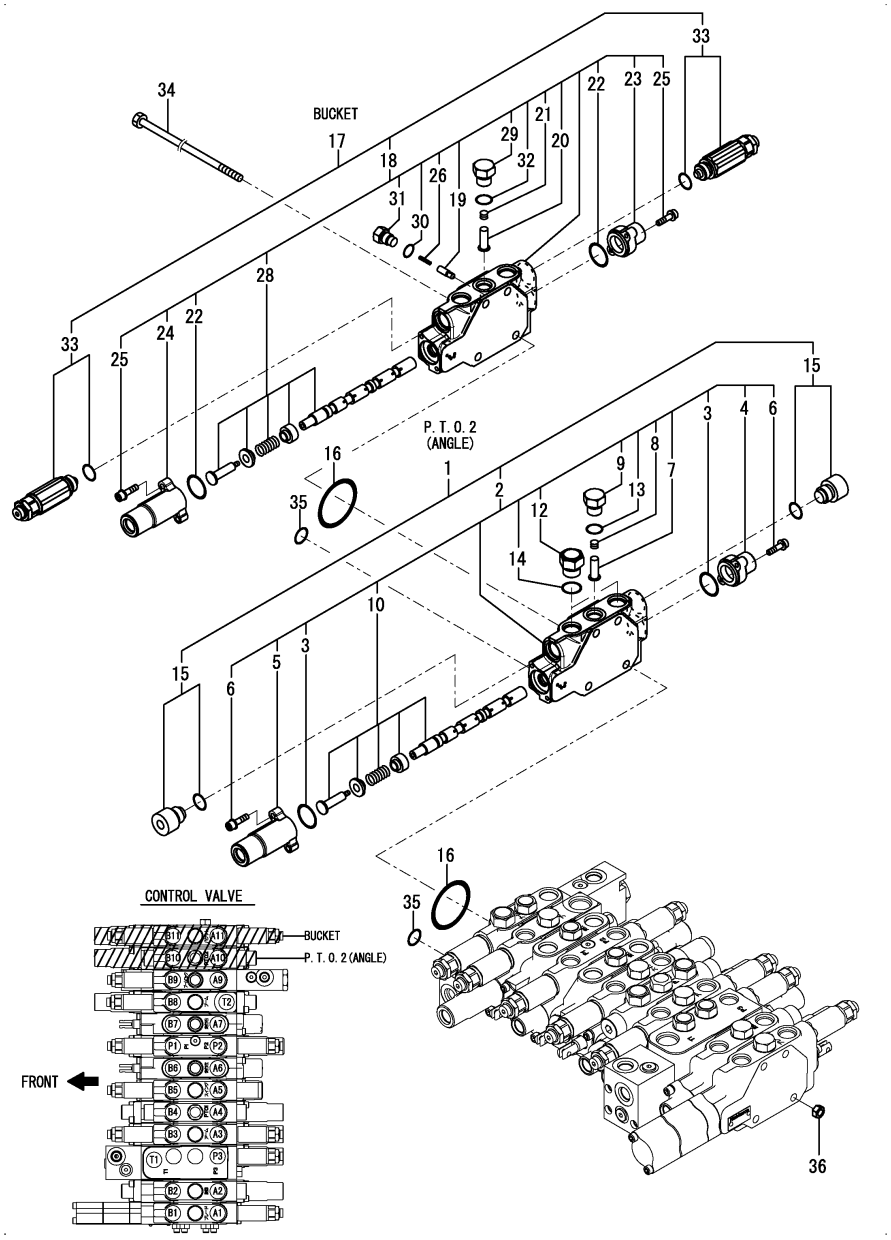

No.	Lev.	Parts No.	Description	Q'ty (A)	(B)	(C)	(D)	(E)	(F)	I	R
1	2	172B03-74390	VALVE ASSY, ANGLE	1	1						
2	3	172B03-74400	SECTION ASSY, ANGLE	1	1						
3	4	172458-74230	O-RING	2	2						
4	4	172458-74240	COVER, PILOT	1	1						
5	4	172458-74250	COVER, PILOT	1	1						
6	4	172458-74260	BOLT	4	4						
7	4	172490-74310	VALVE, REVERSE	1	1						
8	4	172490-74320	SPRING, VALVE	1	1						
9	4	172490-74330	STAY, VALVE	1	1						
10	4	172B03-74410	SPOOL ASSY, ANGLE	1	1						
12	4	172A47-75620	STAY, VALVE	2	2						
13	4	24315-000110	O-RING, 1BP11.0	1	1						
14	4	24315-000140	O-RING, 1BP14.0	2	2						
15	3	172A47-75460	PLUG ASSY, VALVE	2	2						
16	2	172458-74720	O-RING	12	12						
17	2	172B02-74900	VALVE ASSY, BUCKET	1	1						
18	3	172B02-74470	SECTION ASSY, BUCKET	1	1						
19	4	172499-70180	VALVE ASSY, REVERSE	1	1						
20	4	172458-74150	VALVE, REVERSE	1	1						
21	4	172458-74160	SPRING, VALVE	1	1						
22	4	172458-74230	O-RING	2	2						
23	4	172458-74240	COVER, PILOT	1	1						
24	4	172458-74250	COVER, PILOT	1	1						
25	4	172458-74260	BOLT	4	4						
26	4	172173-74280	SPRING	1	1						
28	4	172B02-74490	SPOOL ASSY, BUCKET	1	1						
29	4	172458-74630	STAY, VALVE	1	1						
30	4	172A47-74950	O-RING	1	1						
31	4	172A47-74970	STAY, VALVE	1	1						
32	4	24315-000110	O-RING, 1BP11.0	1	1						
33	3	172458-74710	VALVE, RELIEF	2	2						
34	2	172A47-75450	BOLT	4	4						
35	2	24311-000200	O-RING, 1AP20.0	12	12						
36	2	26716-080002	NUT, M8	4	4						

Remarks
* Exclusive figure for angle blade specification.
* Control valve assy is shown in Fig.166.

N:Old $\frac{\text{Yes}}{\text{No}}$ New, Q:Old $\frac{\text{No}}{\text{Yes}}$ New, R:Old $\frac{\text{Yes}}{\text{Yes}}$ New, S:Old $\frac{\text{No}}{\text{No}}$ New, W:Add, Z:Discontinued, F:Interchangeable by set, K:Q'ty Change

Copyright (C) YANMAR CO., LTD. All RightsReserved.

Fig.168. (101C)CONTROL VALVE(3/8)(ANGLE BLADE SPEC.)

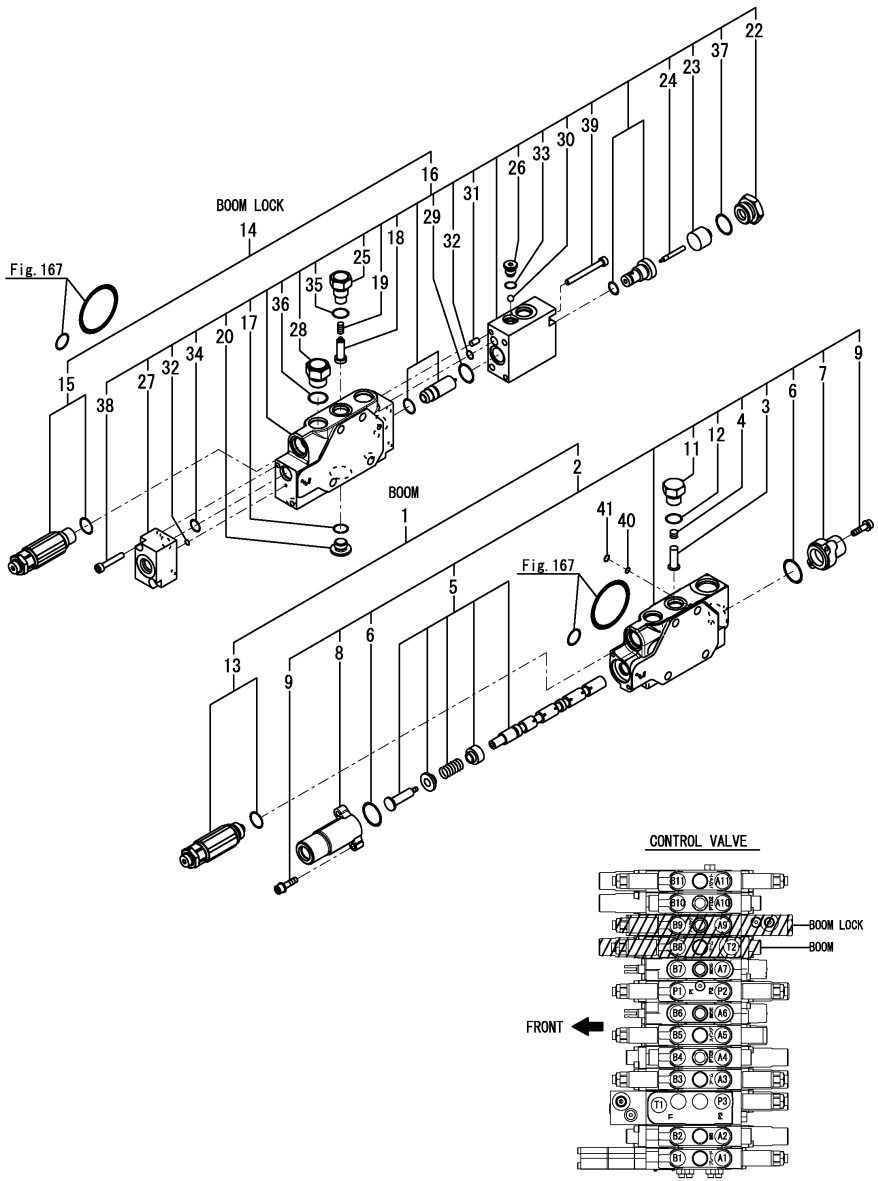

(A)=VIO35-6A P(US)
(B)=VIO35-6A C(US)
(C)=
(D)=
(E)=
(F)=

No.	Lev.	Parts No.	Description	Q'ty (A)	(B)	(C)	(D)	(E)	(F)	I	R
1	2	172B03-74240	VALVE ASSY, BOOM	1	1						
2	3	172B03-74180	SECTION ASSY, BOOM	1	1						
3	4	172458-74150	VALVE, REVERSE	1	1						
4	4	172458-74160	SPRING, VALVE	1	1						
5	4	172B03-74190	SPOOL ASSY, BOOM	1	1						
6	4	172458-74230	O-RING	2	2						
7	4	172458-74240	COVER, PILOT	1	1						
8	4	172458-74250	COVER, PILOT	1	1						
9	4	172458-74260	BOLT	4	4						
11	4	172458-74630	STAY, VALVE	1	1						
12	4	24315-000110	O-RING, 1BP11.0	1	1						
13	3	172A46-74340	VALVE ASSY, OVERLOAD	1	1						
14	2	172B02-74890	VALVE ASSY, LOCK	1	1						
15	3	172456-74440	VALVE, RELIEF	1	1						
16	3	172B02-74450	SECTION ASSY, LOCK	1	1						
17	4	172A47-74270	O-RING	1	1						
18	4	172458-74290	VALVE, REVERSE	1	1						
19	4	172458-74360	SPRING, VALVE	1	1						
20	4	172A47-74460	PLUG	1	1						
22	4	172A47-74560	BUSH PF1/2X1/4	1	1						
23	4	172A47-74570	PISTON B	1	1						
24	4	172A47-74580	PISTON A1	1	1						
25	4	172458-74640	STAY, VALVE	1	1						
26	4	172A47-74920	HOLDER, BALL	1	1						
27	4	172A47-74930	BODY, DISCHARGE	1	1						
28	4	172A47-75620	STAY, VALVE	1	1						
29	4	172A47-75680	O-RING	1	1						
30	4	172A47-75690	BALL, STEEL	1	1						
31	4	22312-050100	PIN, PARALLEL M5X10	2	2						
32	4	24311-000060	O-RING, 1AP6.0	2	2						
33	4	24315-000080	O-RING, 1BP8.0	1	1						
34	4	24315-000100	O-RING, 1BP10.0	1	1						
35	4	24315-000110	O-RING, 1BP11.0	1	1						
36	4	24315-000140	O-RING, 1BP14.0	1	1						
37	4	24315-000180	O-RING, 1BP18.0	1	1						
38	4	26450-050302	BOLT, M5X 30	2	2						
39	4	26450-060652	BOLT, M6X 65	2	2						
40	2	24315-000090	O-RING, 1BP9.0	1	1						
41	2	24315-000100	O-RING, 1BP10.0	1	1						

Remarks
* Exclusive figure for angle blade specification.
* Control valve assy is shown in Fig.166.

N:Old $\xleftrightarrow[\text{No}]{\text{Yes}}$ New, Q:Old $\xleftrightarrow[\text{Yes}]{\text{No}}$ New, R:Old $\xleftrightarrow[\text{Yes}]{\text{Yes}}$ New, S:Old $\xleftrightarrow[\text{No}]{\text{No}}$ New, W:Add, Z:Discontinued, F:Interchangeable by set, K:Q'ty Change

Copyright (C) YANMAR CO., LTD. All RightsReserved.

Fig.169. (101D)CONTROL VALVE(4/8)(ANGLE BLADE SPEC.)

(A)=VIO35-6A P(US)
(B)=VIO35-6A C(US)
(C)=
(D)=
(E)=
(F)=

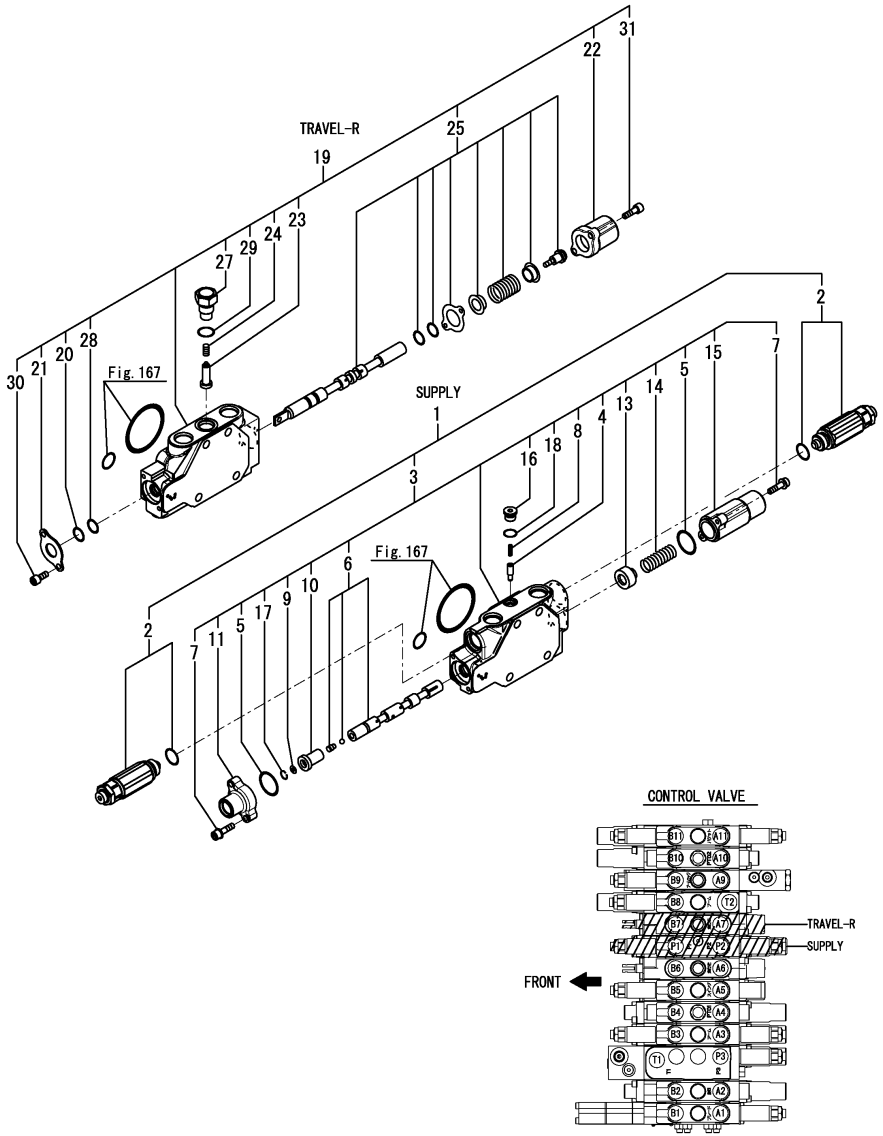

No.	Lev.	Parts No.	Description	Q'ty (A)	(B)	(C)	(D)	(E)	(F)	I	R
1	2	172B03-74230	VALVE ASSY, INLET	1	1						
2	3	172B03-74260	RELIEF ASSY, 23.1	2	2						
3	3	172B02-74380	SECTION ASSY, INLET	1	1						
4	4	172499-70180	VALVE ASSY, REVERSE	1	1						
5	4	172458-74230	O-RING	2	2						
6	4	172A46-74250	SPOOL ASSY, INLET	1	1						
7	4	172458-74260	BOLT	4	4						
8	4	172173-74280	SPRING	1	1						
9	4	172A47-74360	FILTER	1	1						
10	4	172A47-74370	PISTON	1	1						
11	4	172A47-74380	COVER, PILOT	1	1						
13	4	172458-74530	SEAT, SPRING	1	1						
14	4	172458-74540	SPRING, RETURN	1	1						
15	4	172458-74550	COVER, PILOT	1	1						
16	4	172458-74670	PLUG	1	1						
17	4	172A47-74980	CIRCLIP	1	1						
18	4	24315-000080	O-RING, 1BP8.0	1	1						
19	2	172B02-74400	SECTION ASSY,TRAVEL2	1	1						
20	3	172458-74130	WIPER, DUST	1	1						
21	3	172458-74140	RETAINER, SEAL	1	1						
22	3	172458-74170	CAP, SPRING	1	1						
23	3	172458-74290	VALVE, REVERSE	1	1						
24	3	172458-74360	SPRING, VALVE	1	1						
25	3	172B02-74370	SPOOL ASSY, TRAVEL	1	1						
27	3	172458-74640	STAY, VALVE	1	1						
28	3	24311-000120	O-RING, 1AP12.0	1	1						
29	3	24315-000110	O-RING, 1BP11.0	1	1						
30	3	26450-050102	BOLT, M5X 10	2	2						
31	3	26450-050182	BOLT, M5X 18	2	2						

Remarks
* Exclusive figure for angle blade specification.
* Control valve assy is shown in Fig.166.

N:Old $\frac{\text{Yes}}{\text{No}}$ New, Q:Old $\frac{\text{No}}{\text{Yes}}$ New, R:Old $\frac{\text{Yes}}{\text{Yes}}$ New, S:Old $\frac{\text{No}}{\text{No}}$ New, W:Add, Z:Discontinued, F:Interchangeable by set, K:Q'ty Change

Copyright (C) YANMAR CO., LTD. All RightsReserved.

Fig.170. (101E)CONTROL VALVE(5/8)(ANGLE BLADE SPEC.)

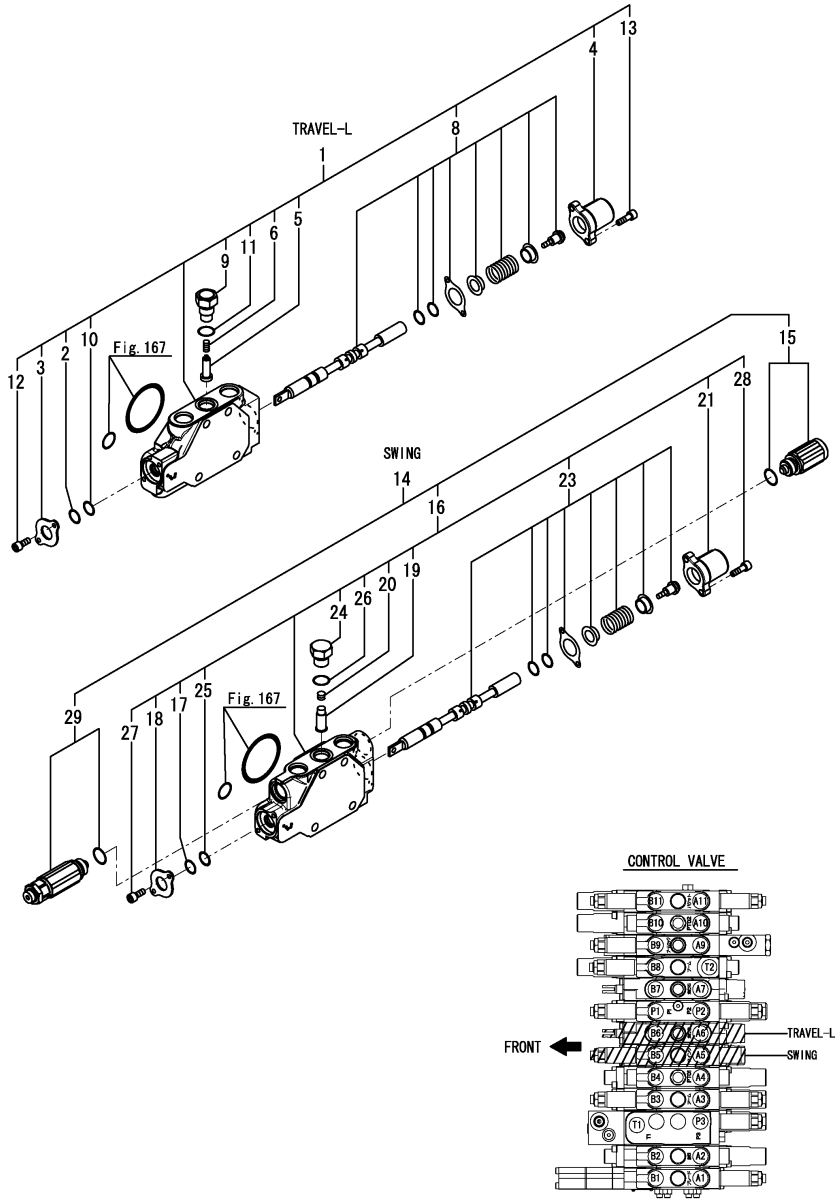

(A)=VIO35-6A P(US)
(B)=VIO35-6A C(US)
(C)=
(D)=
(E)=
(F)=

No.	Lev.	Parts No.	Description	Q'ty (A)	(B)	(C)	(D)	(E)	(F)	I	R
1	2	172B02-74350	SECTION ASSY,TRAVEL1	1	1						
2	3	172458-74130	WIPER, DUST	1	1						
3	3	172458-74140	RETAINER, SEAL	1	1						
4	3	172458-74170	CAP, SPRING	1	1						
5	3	172458-74290	VALVE, REVERSE	1	1						
6	3	172458-74360	SPRING, VALVE	1	1						
8	3	172B02-74370	SPOOL ASSY, TRAVEL	1	1						
9	3	172458-74640	STAY, VALVE	1	1						
10	3	24311-000120	O-RING, 1AP12.0	1	1						
11	3	24315-000110	O-RING, 1BP11.0	1	1						
12	3	26450-050102	BOLT, M5X 10	2	2						
13	3	26450-050182	BOLT, M5X 18	2	2						
14	2	172B02-74860	VALVE ASSY, B SWING	1	1						
15	3	172447-74230	ANTI-CAVITATION	1	1						
16	3	172B02-74320	SECTION ASSY,B SWING	1	1						
17	4	172458-74130	WIPER, DUST	1	1						
18	4	172458-74140	RETAINER, SEAL	1	1						
19	4	172458-74150	VALVE, REVERSE	1	1						
20	4	172458-74160	SPRING, VALVE	1	1						
21	4	172458-74170	CAP, SPRING	1	1						
23	4	172B02-74340	SPOOL ASSY, B SWING	1	1						
24	4	172458-74630	STAY, VALVE	1	1						
25	4	24311-000120	O-RING, 1AP12.0	1	1						
26	4	24315-000110	O-RING, 1BP11.0	1	1						
27	4	26450-050102	BOLT, M5X 10	2	2						
28	4	26450-050182	BOLT, M5X 18	2	2						
29	3	172458-74710	VALVE, RELIEF	1	1						

Remarks
* Exclusive figure for angle blade specification.
* Control valve assy is shown in Fig.166.

N:Old $\xleftarrow[\text{No}]{\text{Yes}}$ New, Q:Old $\xleftarrow[\text{Yes}]{\text{No}}$ New, R:Old $\xleftarrow[\text{Yes}]{\text{Yes}}$ New, S:Old $\xleftarrow[\text{No}]{\text{No}}$ New, W:Add, Z:Discontinued, F:Interchangeable by set, K:Q'ty Change

Copyright (C) YANMAR CO., LTD. All RightsReserved.

Fig.171. (101F)CONTROL VALVE(6/8)(ANGLE BLADE SPEC.)

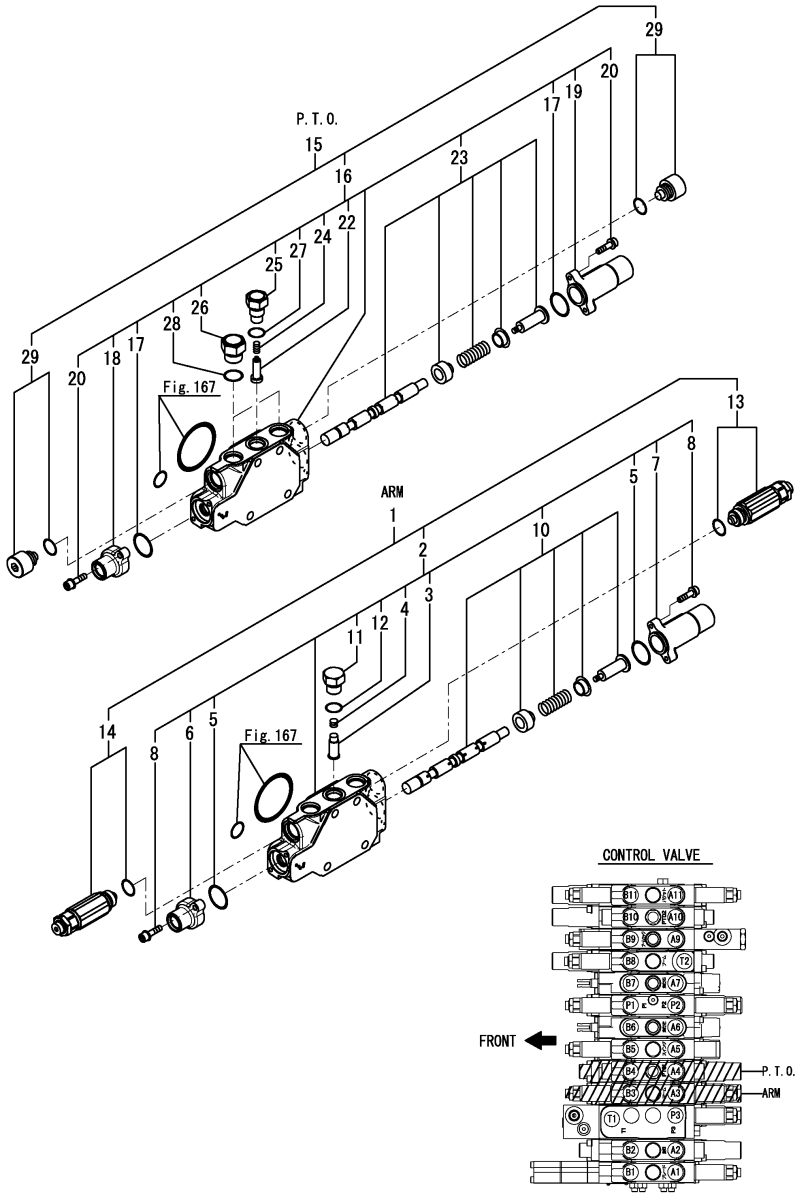

(A)=VIO35-6A P(US)
(B)=VIO35-6A C(US)
(C)=
(D)=
(E)=
(F)=

No.	Lev.	Parts No.	Description	Q'ty (A)	(B)	(C)	(D)	(E)	(F)	I	R
1	2	172B03-74220	VALVE ASSY, ARM	1	1						
2	3	172B02-74260	SECTION ASSY, ARM	1	1						
3	4	172458-74150	VALVE, REVERSE	1	1						
4	4	172458-74160	SPRING, VALVE	1	1						
5	4	172458-74230	O-RING	2	2						
6	4	172458-74240	COVER, PILOT	1	1						
7	4	172458-74250	COVER, PILOT	1	1						
8	4	172458-74260	BOLT	4	4						
10	4	172B02-74280	SPOOL ASSY, ARM	1	1						
11	4	172458-74630	STAY, VALVE	1	1						
12	4	24315-000110	O-RING, 1BP11.0	1	1						
13	3	172A46-74340	VALVE ASSY, OVERLOAD	1	1						
14	3	172458-74710	VALVE, RELIEF	1	1						
15	2	172B02-74850	VALVE ASSY, PTO	1	1						
16	3	172B02-74290	SECTION ASSY, PTO	1	1						
17	4	172458-74230	O-RING	2	2						
18	4	172458-74240	COVER, PILOT	1	1						
19	4	172458-74250	COVER, PILOT	1	1						
20	4	172458-74260	BOLT	4	4						
22	4	172490-74310	VALVE, REVERSE	1	1						
23	4	172B02-74310	SPOOL ASSY, PTO	1	1						
24	4	172490-74320	SPRING, VALVE	1	1						
25	4	172490-74330	STAY, VALVE	1	1						
26	4	172A47-75620	STAY, VALVE	2	2						
27	4	24315-000110	O-RING, 1BP11.0	1	1						
28	4	24315-000140	O-RING, 1BP14.0	2	2						
29	3	172A47-75460	PLUG ASSY, VALVE	2	2						

Remarks
* Exclusive figure for angle blade specification.
* Control valve assy is shown in Fig.166.

N:Old ←Yes/No→ New, Q:Old ←No/Yes→ New, R:Old ←Yes/Yes→ New, S:Old ←No/No→ New, W:Add, Z:Discontinued, F:Interchangeable by set, K:Q'ty Change

Copyright (C) YANMAR CO., LTD. All RightsReserved.

Fig.172. (101G)CONTROL VALVE(7/8)(ANGLE BLADE SPEC.)

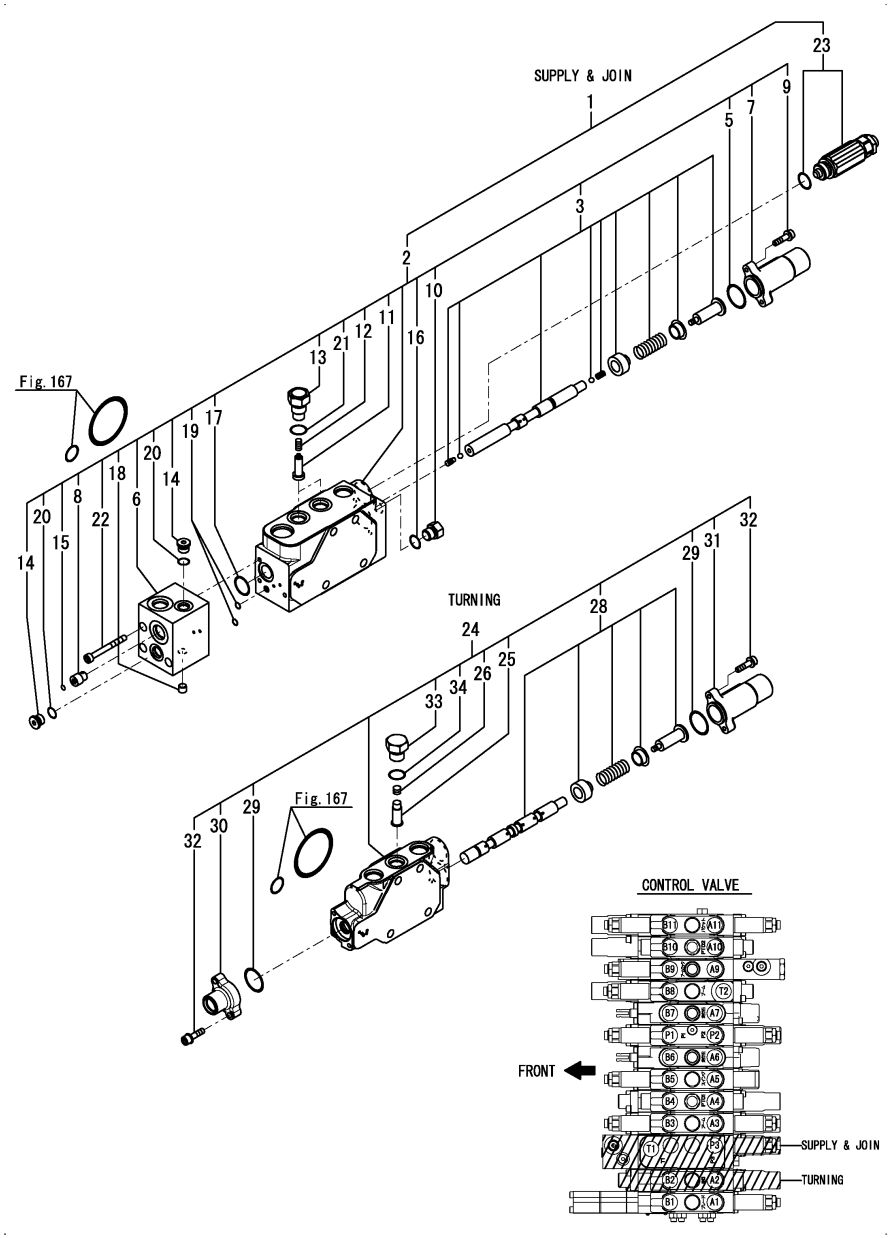

(A)=VIO35-6A P(US)
(B)=VIO35-6A C(US)
(C)=
(D)=
(E)=
(F)=

No.	Lev.	Parts No.	Description	Q'ty (A)	(B)	(C)	(D)	(E)	(F)	I	R
1	2	172B03-74210	VALVE ASSY, CONFLUX	1	1						
2	3	172B03-74160	SECTION ASSY,CONFLUX	1	1						
3	4	172B03-74170	SPOOL ASSY, CONFLUX	1	1						
5	4	172458-74230	O-RING	1	1						
6	4	172B02-74240	BLOCK, PILOT	1	1						
7	4	172458-74250	COVER, PILOT	1	1						
8	4	172B02-74250	PLUG, THROTTLE	1	1						
9	4	172458-74260	BOLT	2	2						
10	4	172A47-74260	PLUG	1	1						
11	4	172458-74290	VALVE, REVERSE	2	2						
12	4	172458-74360	SPRING, VALVE	2	2						
13	4	172458-74640	STAY, VALVE	2	2						
14	4	172458-74670	PLUG	2	2						
15	4	172499-74860	FILTER	1	1						
16	4	172A47-74950	O-RING	1	1						
17	4	172A47-75680	O-RING	1	1						
18	4	172A47-75720	PLUG NPT1/16	1	1						
19	4	24315-000050	O-RING, 1BP5.0	2	2						
20	4	24315-000080	O-RING, 1BP8.0	2	2						
21	4	24315-000110	O-RING, 1BP11.0	2	2						
22	4	26450-050502	BOLT, M5X 50	3	3						
23	3	172B03-74270	RELIEF ASSY, 21.1	1	1						
24	2	172B03-74340	SECTION ASSY,SWING F	1	1						
25	3	172458-74150	VALVE, REVERSE	1	1						
26	3	172458-74160	SPRING, VALVE	1	1						
28	3	172B02-74200	SPOOL ASSY, SWING	1	1						
29	3	172458-74230	O-RING	2	2						
30	3	172458-74240	COVER, PILOT	1	1						
31	3	172458-74250	COVER, PILOT	1	1						
32	3	172458-74260	BOLT	4	4						
33	3	172458-74630	STAY, VALVE	1	1						
34	3	24315-000110	O-RING, 1BP11.0	1	1						

Remarks
* Exclusive figure for angle blade specification.
* Control valve assy is shown in Fig.166.

N:Old ←Yes/No→ New, Q:Old ←No/Yes→ New, R:Old ←Yes/Yes→ New, S:Old ←No/No→ New, W:Add, Z:Discontinued, F:Interchangeable by set, K:Q'ty Change

Copyright (C) YANMAR CO., LTD. All RightsReserved.

Fig.173. (101H)CONTROL VALVE(8/8)(ANGLE BLADE SPEC.)

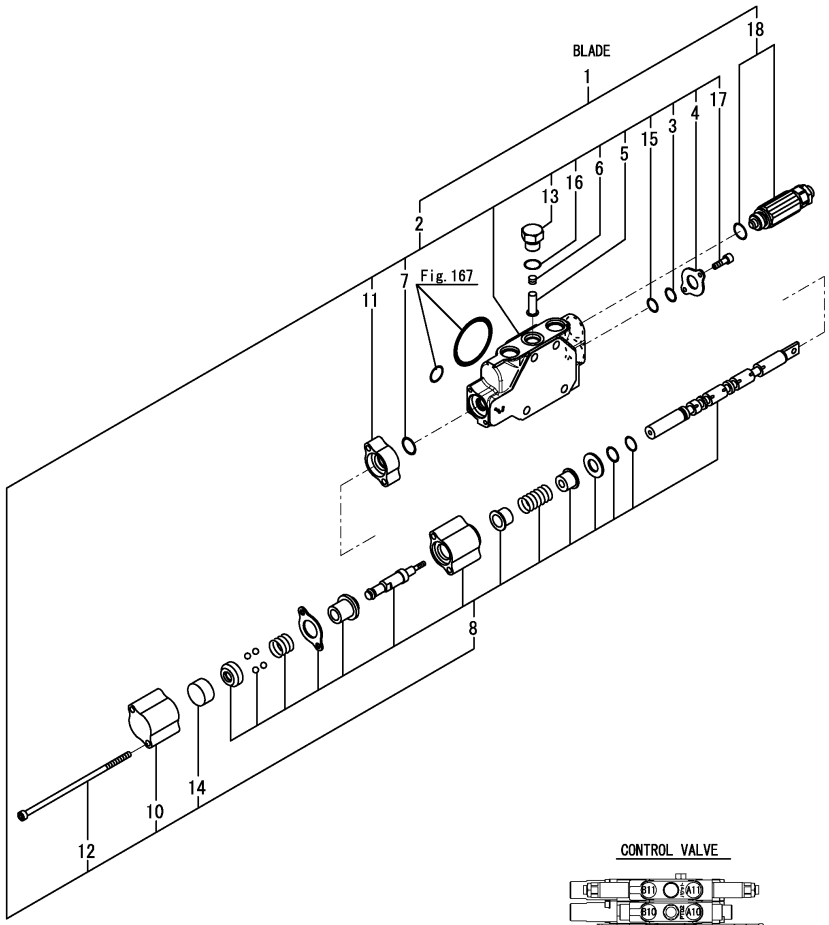

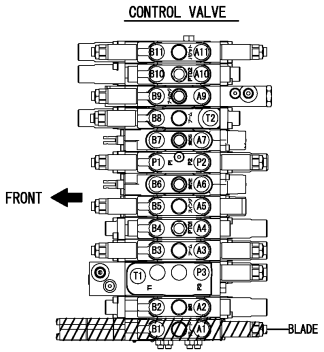

(A)=VIO35-6A P(US)
(B)=VIO35-6A C(US)
(C)=
(D)=
(E)=
(F)=

No.	Lev.	Parts No.	Description	Q'ty (A)	(B)	(C)	(D)	(E)	(F)	I	R
1	2	172B03-74310	VALVE ASSY, BLADE FL	1	1						
2	3	172B03-74320	SECTION ASSY,BLADE F	1	1						
3	4	172458-74130	WIPER, DUST	1	1						
4	4	172458-74140	RETAINER, SEAL	1	1						
5	4	172458-74150	VALVE, REVERSE	1	1						
6	4	172458-74160	SPRING, VALVE	1	1						
7	4	172458-74230	O-RING	1	1						
8	4	172B03-74330	SPOOL ASSY, BLADE FL	1	1						
10	4	172B05-74350	COVER, RETURN SPRING	1	1						
11	4	172B05-74360	CASE, SEAL	1	1						
12	4	172B05-74370	BOLT, SOCKET M5X100	2	2						
13	4	172458-74630	STAY, VALVE	1	1						
14	4	172531-74710	STOPPER	1	1						
15	4	24311-000120	O-RING, 1AP12.0	1	1						
16	4	24315-000110	O-RING, 1BP11.0	1	1						
17	4	26450-050102	BOLT, M5X 10	2	2						
18	3	172B02-74730	RELIEF ASSY,ORV 9.8	1	1						

Remarks
* Exclusive figure for angle blade specification.
* Control valve assy is shown in Fig.166.

N:Old $\frac{\text{Yes}}{\text{No}}$ New, Q:Old $\frac{\text{No}}{\text{Yes}}$ New, R:Old $\frac{\text{Yes}}{\text{Yes}}$ New, S:Old $\frac{\text{No}}{\text{No}}$ New, W:Add, Z:Discontinued, F:Interchangeable by set, K:Q'ty Change

Copyright (C) YANMAR CO., LTD. All RightsReserved.

Fig.204. (101I)CONTROL VALVE(1/7)(THUMB BRACKET SPEC.)

(A)=VIO35-6A P(US)
(B)=VIO35-6A C(US)
(C)=
(D)=
(E)=
(F)=

No.	Lev.	Parts No.	Description	Q'ty (A)	(B)	(C)	(D)	(E)	(F)	I	R
1	1	172B03-74140	VALVE ASSY,CV US	1	1						
2	1	26013-100162	BOLT, M10X 16	3	3						

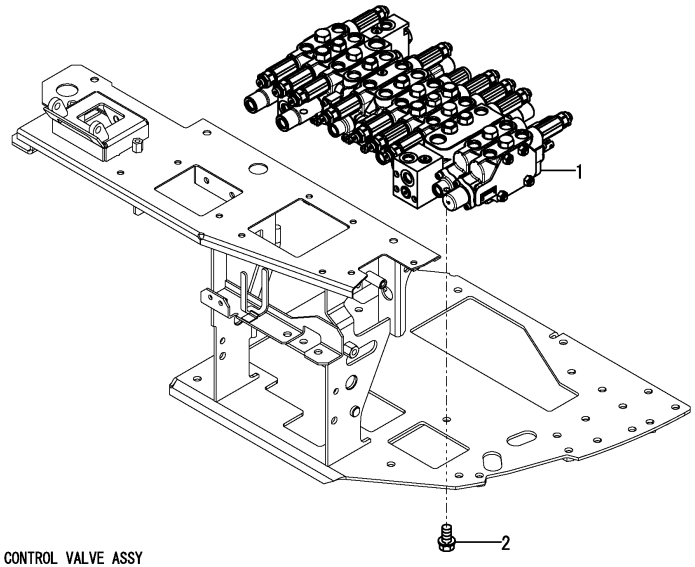

CONTROL VALVE ASSY
Fig.204 Ref.No.1.
INC.Fig.205～210.

CONTROL VALVE

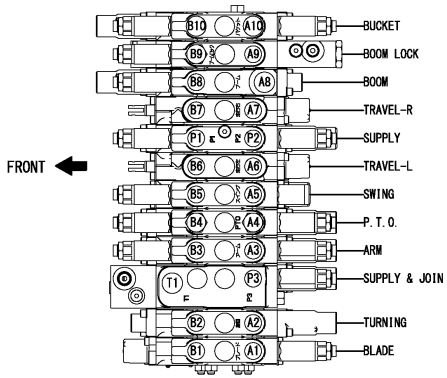

Remarks
* Not applied for angle blade specification.

N:Old ←Yes/No→ New, Q:Old ←No/Yes→ New, R:Old ←Yes/Yes→ New, S:Old ←No/No→ New, W:Add, Z:Discontinued, F:Interchangeable by set, K:Q'ty Change

Copyright (C) YANMAR CO., LTD. All RightsReserved.

Fig.205. (101J)CONTROL VALVE(2/7)(THUMB BRACKET SPEC.)

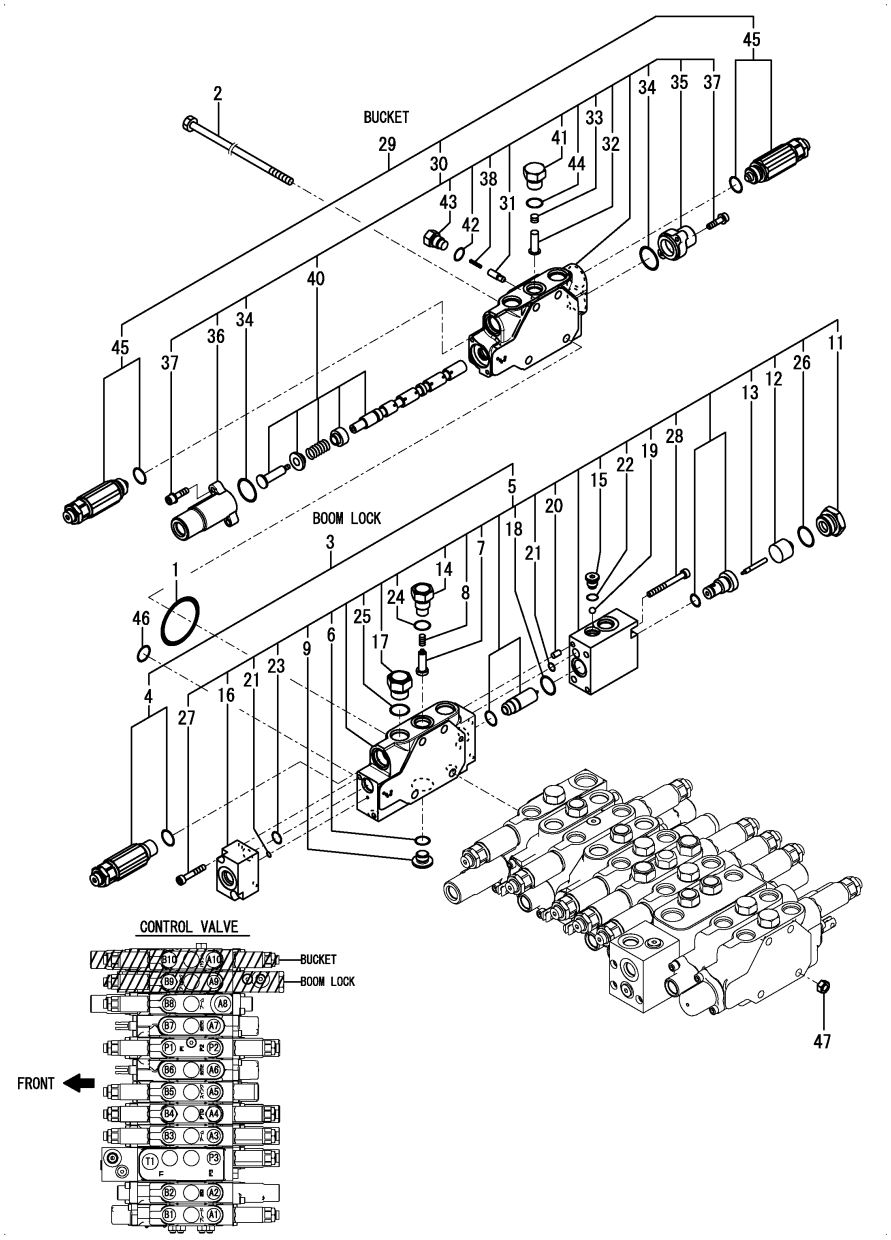

(A)=VIO35-6A P(US)
(B)=VIO35-6A C(US)
(C)=
(D)=
(E)=
(F)=

No.	Lev.	Parts No.	Description	Q'ty (A)	(B)	(C)	(D)	(E)	(F)	I	R
1	2	172458-74720	O-RING	11	11						
2	2	172458-74730	BOLT	4	4						
3	2	172B02-74890	VALVE ASSY, LOCK	1	1						
4	3	172456-74440	VALVE, RELIEF	1	1						
5	3	172B02-74450	SECTION ASSY, LOCK	1	1						
6	4	172A47-74270	O-RING	1	1						
7	4	172458-74290	VALVE, REVERSE	1	1						
8	4	172458-74360	SPRING, VALVE	1	1						
9	4	172A47-74460	PLUG	1	1						
11	4	172A47-74560	BUSH PF1/2X1/4	1	1						
12	4	172A47-74570	PISTON B	1	1						
13	4	172A47-74580	PISTON A1	1	1						
14	4	172458-74640	STAY, VALVE	1	1						
15	4	172A47-74920	HOLDER, BALL	1	1						
16	4	172A47-74930	BODY, DISCHARGE	1	1						
17	4	172A47-75620	STAY, VALVE	1	1						
18	4	172A47-75680	O-RING	1	1						
19	4	172A47-75690	BALL, STEEL	1	1						
20	4	22312-050100	PIN, PARALLEL M5X10	2	2						
21	4	24311-000060	O-RING, 1AP6.0	2	2						
22	4	24315-000080	O-RING, 1BP8.0	1	1						
23	4	24315-000100	O-RING, 1BP10.0	1	1						
24	4	24315-000110	O-RING, 1BP11.0	1	1						
25	4	24315-000140	O-RING, 1BP14.0	1	1						
26	4	24315-000180	O-RING, 1BP18.0	1	1						
27	4	26450-050302	BOLT, M5X 30	2	2						
28	4	26450-060652	BOLT, M6X 65	2	2						
29	2	172B02-74900	VALVE ASSY, BUCKET	1	1						
30	3	172B02-74470	SECTION ASSY, BUCKET	1	1						
31	4	172499-70180	VALVE ASSY, REVERSE	1	1						
32	4	172458-74150	VALVE, REVERSE	1	1						
33	4	172458-74160	SPRING, VALVE	1	1						
34	4	172458-74230	O-RING	2	2						
35	4	172458-74240	COVER, PILOT	1	1						
36	4	172458-74250	COVER, PILOT	1	1						
37	4	172458-74260	BOLT	4	4						
38	4	172173-74280	SPRING	1	1						
40	4	172B02-74490	SPOOL ASSY, BUCKET	1	1						
41	4	172458-74630	STAY, VALVE	1	1						
42	4	172A47-74950	O-RING	1	1						
43	4	172A47-74970	STAY, VALVE	1	1						
44	4	24315-000110	O-RING, 1BP11.0	1	1						
45	3	172458-74710	VALVE, RELIEF	2	2						
46	2	24311-000200	O-RING, 1AP20.0	11	11						
47	2	26716-080002	NUT, M8	4	4						

Remarks
* Not applied for angle blade specification.
* Control valve assy is shown in Fig.204(101I).

N:Old $\xleftarrow[\text{No}]{\text{Yes}}$ New, Q:Old $\xleftarrow[\text{Yes}]{\text{No}}$ New, R:Old $\xleftarrow[\text{Yes}]{\text{Yes}}$ New, S:Old $\xleftarrow[\text{No}]{\text{No}}$ New, W:Add, Z:Discontinued, F:Interchangeable by set, K:Q'ty Change

Copyright (C) YANMAR CO., LTD. All RightsReserved.

Fig.206. (101K)CONTROL VALVE(3/7)(THUMB BRACKET SPEC.)

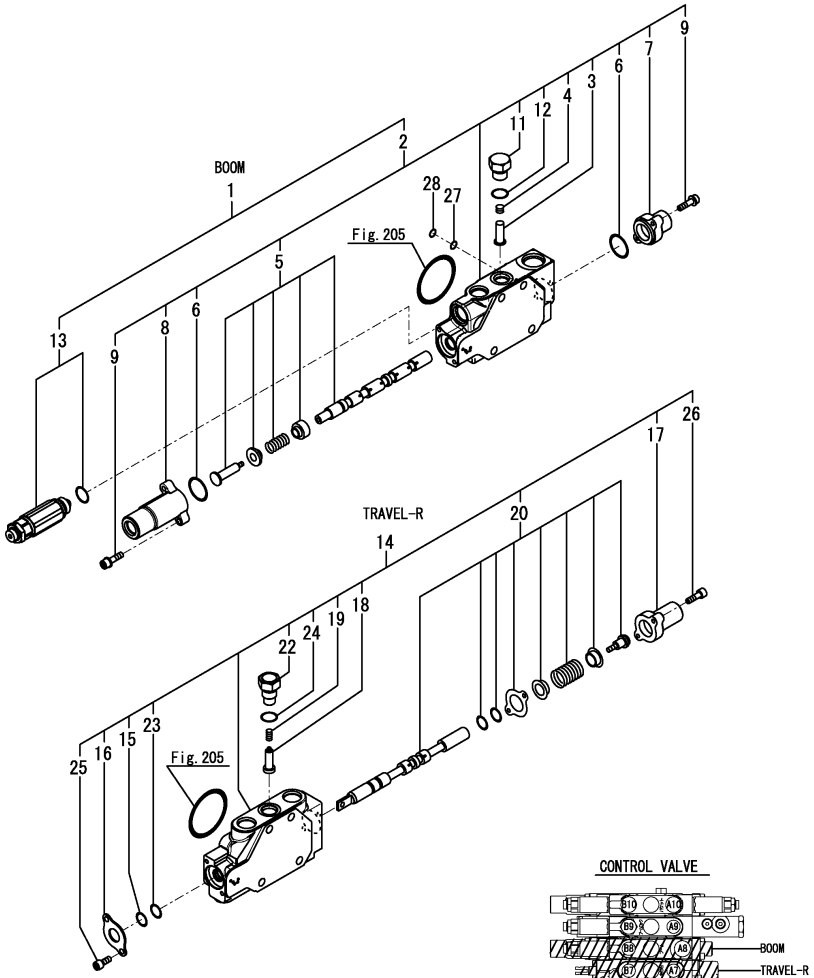

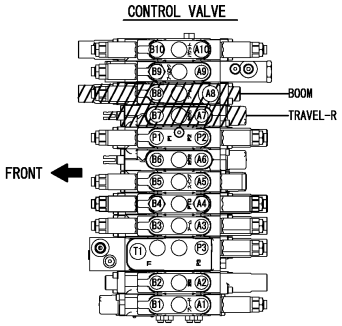

(A)=VIO35-6A P(US)
(B)=VIO35-6A C(US)
(C)=
(D)=
(E)=
(F)=

No.	Lev.	Parts No.	Description	Q'ty (A)	(B)	(C)	(D)	(E)	(F)	I	R
1	2	172B03-74240	VALVE ASSY, BOOM	1	1						
2	3	172B03-74180	SECTION ASSY, BOOM	1	1						
3	4	172458-74150	VALVE, REVERSE	1	1						
4	4	172458-74160	SPRING, VALVE	1	1						
5	4	172B03-74190	SPOOL ASSY, BOOM	1	1						
6	4	172458-74230	O-RING	2	2						
7	4	172458-74240	COVER, PILOT	1	1						
8	4	172458-74250	COVER, PILOT	1	1						
9	4	172458-74260	BOLT	4	4						
11	4	172458-74630	STAY, VALVE	1	1						
12	4	24315-000110	O-RING, 1BP11.0	1	1						
13	3	172A46-74340	VALVE ASSY, OVERLOAD	1	1						
14	2	172B02-74400	SECTION ASSY,TRAVEL2	1	1						
15	3	172458-74130	WIPER, DUST	1	1						
16	3	172458-74140	RETAINER, SEAL	1	1						
17	3	172458-74170	CAP, SPRING	1	1						
18	3	172458-74290	VALVE, REVERSE	1	1						
19	3	172458-74360	SPRING, VALVE	1	1						
20	3	172B02-74370	SPOOL ASSY, TRAVEL	1	1						
22	3	172458-74640	STAY, VALVE	1	1						
23	3	24311-000120	O-RING, 1AP12.0	1	1						
24	3	24315-000110	O-RING, 1BP11.0	1	1						
25	3	26450-050102	BOLT, M5X 10	2	2						
26	3	26450-050182	BOLT, M5X 18	2	2						
27	2	24315-000090	O-RING, 1BP9.0	1	1						
28	2	24315-000100	O-RING, 1BP10.0	1	1						

Remarks
* Not applied for angle blade specification.
* Control valve assy is shown in Fig.204(101I).

N:Old $\frac{\text{Yes}}{\text{No}}$ New, Q:Old $\frac{\text{No}}{\text{Yes}}$ New, R:Old $\frac{\text{Yes}}{\text{Yes}}$ New, S:Old $\frac{\text{No}}{\text{No}}$ New, W:Add, Z:Discontinued, F:Interchangeable by set, K:Q'ty Change

Copyright (C) YANMAR CO., LTD. All RightsReserved.

Fig.207. (101L)CONTROL VALVE(4/7)(THUMB BRACKET SPEC.)

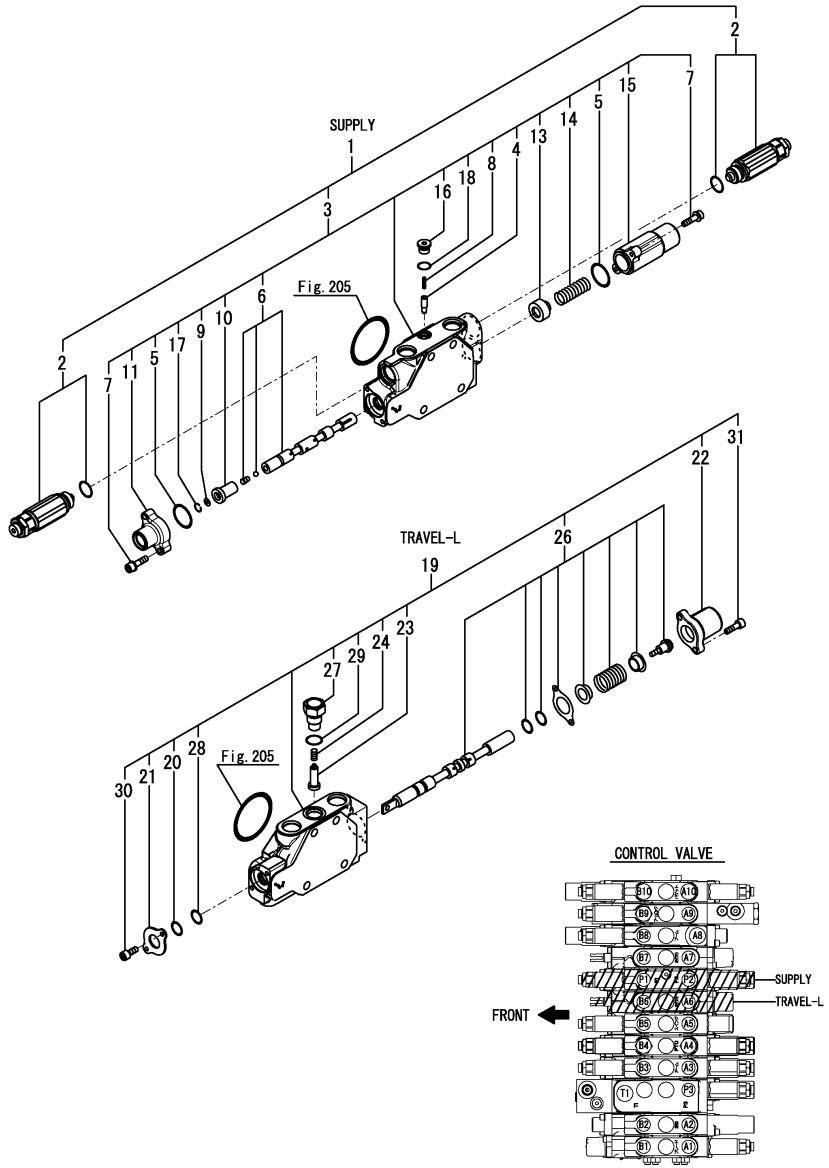

(A)=VIO35-6A P(US)
(B)=VIO35-6A C(US)
(C)=
(D)=
(E)=
(F)=

No.	Lev.	Parts No.	Description	Q'ty (A)	(B)	(C)	(D)	(E)	(F)	I	R
1	2	172B03-74230	VALVE ASSY, INLET	1	1						
2	3	172B03-74260	RELIEF ASSY, 23.1	2	2						
3	3	172B02-74380	SECTION ASSY, INLET	1	1						
4	4	172499-70180	VALVE ASSY, REVERSE	1	1						
5	4	172458-74230	O-RING	2	2						
6	4	172A46-74250	SPOOL ASSY, INLET	1	1						
7	4	172458-74260	BOLT	4	4						
8	4	172173-74280	SPRING	1	1						
9	4	172A47-74360	FILTER	1	1						
10	4	172A47-74370	PISTON	1	1						
11	4	172A47-74380	COVER, PILOT	1	1						
13	4	172458-74530	SEAT, SPRING	1	1						
14	4	172458-74540	SPRING, RETURN	1	1						
15	4	172458-74550	COVER, PILOT	1	1						
16	4	172458-74670	PLUG	1	1						
17	4	172A47-74980	CIRCLIP	1	1						
18	4	24315-000080	O-RING, 1BP8.0	1	1						
19	2	172B02-74350	SECTION ASSY,TRAVEL1	1	1						
20	3	172458-74130	WIPER, DUST	1	1						
21	3	172458-74140	RETAINER, SEAL	1	1						
22	3	172458-74170	CAP, SPRING	1	1						
23	3	172458-74290	VALVE, REVERSE	1	1						
24	3	172458-74360	SPRING, VALVE	1	1						
26	3	172B02-74370	SPOOL ASSY, TRAVEL	1	1						
27	3	172458-74640	STAY, VALVE	1	1						
28	3	24311-000120	O-RING, 1AP12.0	1	1						
29	3	24315-000110	O-RING, 1BP11.0	1	1						
30	3	26450-050102	BOLT, M5X 10	2	2						
31	3	26450-050182	BOLT, M5X 18	2	2						

Remarks
* Not applied for angle blade specification.
* Control valve assy is shown in Fig.204(101I).

N:Old $\frac{\text{Yes}}{\text{No}}$ New, Q:Old $\frac{\text{No}}{\text{Yes}}$ New, R:Old $\frac{\text{Yes}}{\text{Yes}}$ New, S:Old $\frac{\text{No}}{\text{No}}$ New, W:Add, Z:Discontinued, F:Interchangeable by set, K:Q'ty Change

Copyright (C) YANMAR CO., LTD. All RightsReserved.

Fig.208. (101M)CONTROL VALVE(5/7)(THUMB BRACKET SPEC.)

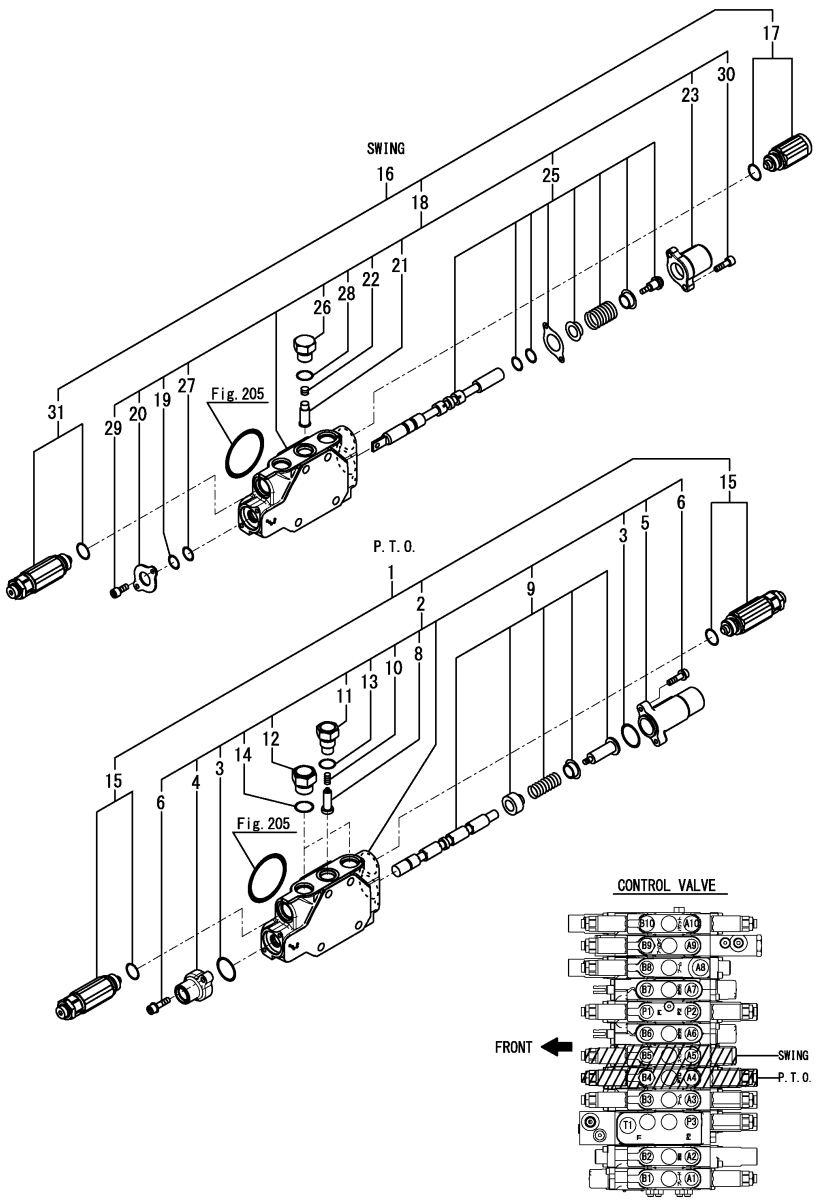

(A)=VIO35-6A P(US)
(B)=VIO35-6A C(US)
(C)=
(D)=
(E)=
(F)=

No.	Lev.	Parts No.	Description	Q'ty (A)	(B)	(C)	(D)	(E)	(F)	I	R
1	2	172B03-74250	VALVE ASSY, PTO US	1	1						
2	3	172B02-74290	SECTION ASSY, PTO	1	1						
3	4	172458-74230	O-RING	2	2						
4	4	172458-74240	COVER, PILOT	1	1						
5	4	172458-74250	COVER, PILOT	1	1						
6	4	172458-74260	BOLT	4	4						
8	4	172490-74310	VALVE, REVERSE	1	1						
9	4	172B02-74310	SPOOL ASSY, PTO	1	1						
10	4	172490-74320	SPRING, VALVE	1	1						
11	4	172490-74330	STAY, VALVE	1	1						
12	4	172A47-75620	STAY, VALVE	2	2						
13	4	24315-000110	O-RING, 1BP11.0	1	1						
14	4	24315-000140	O-RING, 1BP14.0	2	2						
15	3	172B03-74820	RELIEF ASSY,ORV 17.2	2	2						
16	2	172B02-74860	VALVE ASSY, B SWING	1	1						
17	3	172447-74230	ANTI-CAVITATION	1	1						
18	3	172B02-74320	SECTION ASSY,B SWING	1	1						
19	4	172458-74130	WIPER, DUST	1	1						
20	4	172458-74140	RETAINER, SEAL	1	1						
21	4	172458-74150	VALVE, REVERSE	1	1						
22	4	172458-74160	SPRING, VALVE	1	1						
23	4	172458-74170	CAP, SPRING	1	1						
25	4	172B02-74340	SPOOL ASSY, B SWING	1	1						
26	4	172458-74630	STAY, VALVE	1	1						
27	4	24311-000120	O-RING, 1AP12.0	1	1						
28	4	24315-000110	O-RING, 1BP11.0	1	1						
29	4	26450-050102	BOLT, M5X 10	2	2						
30	4	26450-050182	BOLT, M5X 18	2	2						
31	3	172458-74710	VALVE, RELIEF	1	1						

Remarks
* Not applied for angle blade specification.
* Control valve assy is shown in Fig.204(101I).

N:Old $\frac{\text{Yes}}{\text{No}}$ New, Q:Old $\frac{\text{No}}{\text{Yes}}$ New, R:Old $\frac{\text{Yes}}{\text{Yes}}$ New, S:Old $\frac{\text{No}}{\text{No}}$ New, W:Add, Z:Discontinued, F:Interchangeable by set, K:Q'ty Change

Copyright (C) YANMAR CO., LTD. All RightsReserved.

Fig.209. (101N)CONTROL VALVE(6/7)(THUMB BRACKET SPEC.)

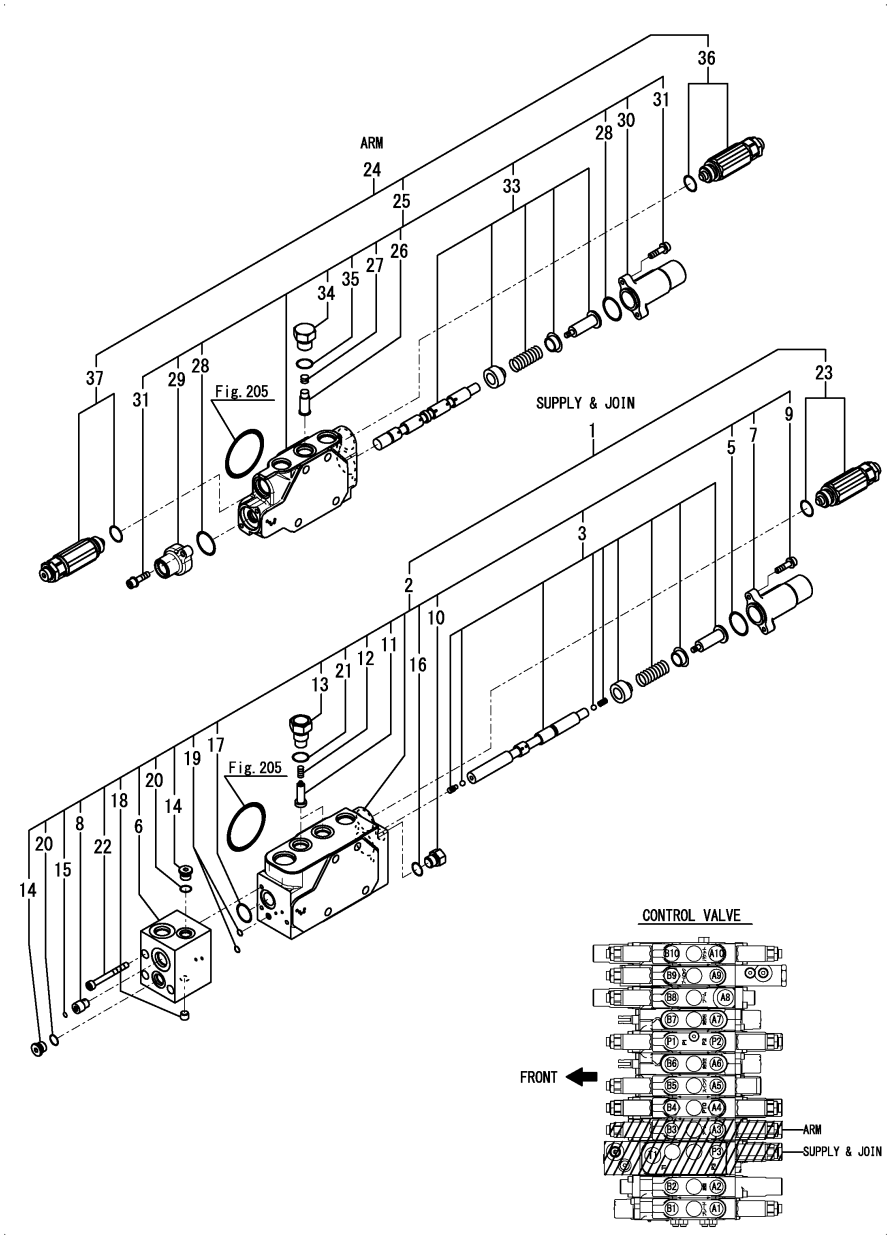

(A)=VIO35-6A P(US)
(B)=VIO35-6A C(US)
(C)=
(D)=
(E)=
(F)=

No.	Lev.	Parts No.	Description	Q'ty (A)	(B)	(C)	(D)	(E)	(F)	I	R
1	2	172B03-74210	VALVE ASSY, CONFLUX	1	1						
2	3	172B03-74160	SECTION ASSY,CONFLUX	1	1						
3	4	172B03-74170	SPOOL ASSY, CONFLUX	1	1						
5	4	172458-74230	O-RING	1	1						
6	4	172B02-74240	BLOCK, PILOT	1	1						
7	4	172458-74250	COVER, PILOT	1	1						
8	4	172B02-74250	PLUG, THROTTLE	1	1						
9	4	172458-74260	BOLT	2	2						
10	4	172A47-74260	PLUG	1	1						
11	4	172458-74290	VALVE, REVERSE	2	2						
12	4	172458-74360	SPRING, VALVE	2	2						
13	4	172458-74640	STAY, VALVE	2	2						
14	4	172458-74670	PLUG	2	2						
15	4	172499-74860	FILTER	1	1						
16	4	172A47-74950	O-RING	1	1						
17	4	172A47-75680	O-RING	1	1						
18	4	172A47-75720	PLUG NPT1/16	1	1						
19	4	24315-000050	O-RING, 1BP5.0	2	2						
20	4	24315-000080	O-RING, 1BP8.0	2	2						
21	4	24315-000110	O-RING, 1BP11.0	2	2						
22	4	26450-050502	BOLT, M5X 50	3	3						
23	3	172B03-74270	RELIEF ASSY, 21.1	1	1						
24	2	172B03-74220	VALVE ASSY, ARM	1	1						
25	3	172B02-74260	SECTION ASSY, ARM	1	1						
26	4	172458-74150	VALVE, REVERSE	1	1						
27	4	172458-74160	SPRING, VALVE	1	1						
28	4	172458-74230	O-RING	2	2						
29	4	172458-74240	COVER, PILOT	1	1						
30	4	172458-74250	COVER, PILOT	1	1						
31	4	172458-74260	BOLT	4	4						
33	4	172B02-74280	SPOOL ASSY, ARM	1	1						
34	4	172458-74630	STAY, VALVE	1	1						
35	4	24315-000110	O-RING, 1BP11.0	1	1						
36	3	172A46-74340	VALVE ASSY, OVERLOAD	1	1						
37	3	172458-74710	VALVE, RELIEF	1	1						

Remarks
* Not applied for angle blade specification.
* Control valve assy is shown in Fig.204(101I).

N:Old $\xleftarrow[\text{No}]{\text{Yes}}$ New, Q:Old $\xleftarrow[\text{Yes}]{\text{No}}$ New, R:Old $\xleftarrow[\text{Yes}]{\text{Yes}}$ New, S:Old $\xleftarrow[\text{No}]{\text{No}}$ New, W:Add, Z:Discontinued, F:Interchangeable by set, K:Q'ty Change

Copyright (C) YANMAR CO., LTD. All RightsReserved.

Fig.210. (101O)CONTROL VALVE(7/7)(THUMB BRACKET SPEC.)

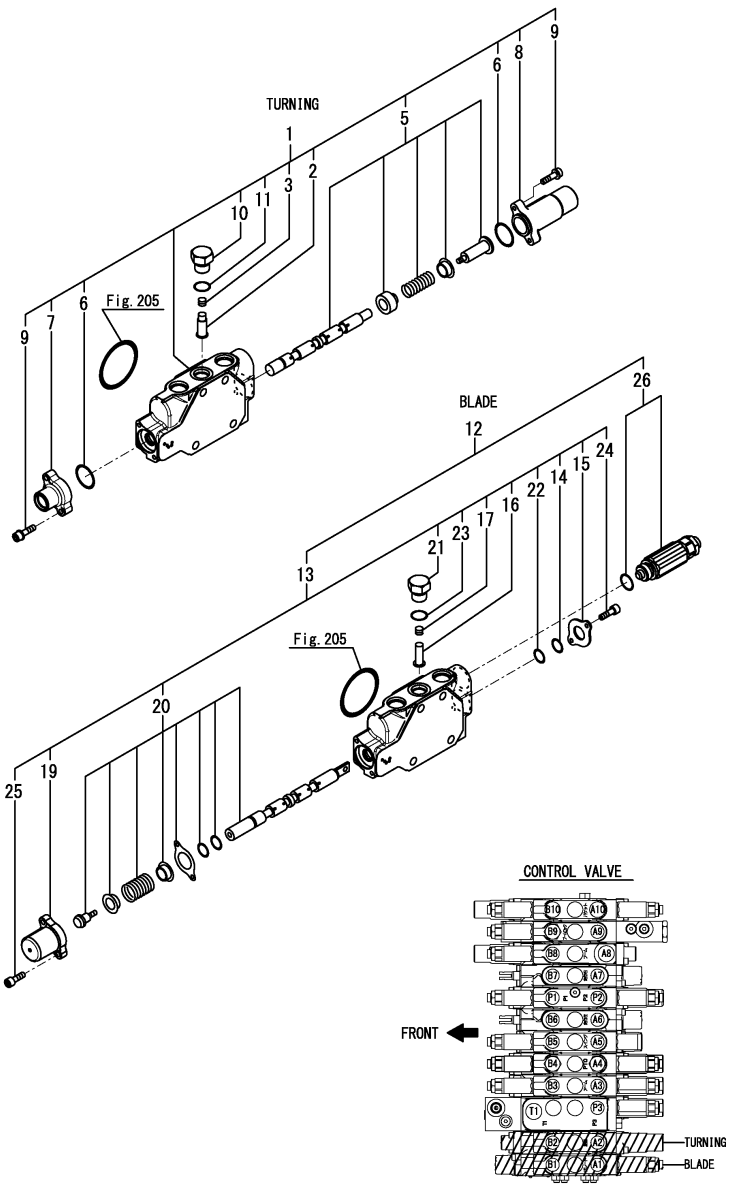

(A)=VIO35-6A P(US)
(B)=VIO35-6A C(US)
(C)=
(D)=
(E)=
(F)=

No.	Lev.	Parts No.	Description	Q'ty (A)	(B)	(C)	(D)	(E)	(F)	I	R
1	2	172B02-74180	SECTION ASSY, SWING	1	1						
2	3	172458-74150	VALVE, REVERSE	1	1						
3	3	172458-74160	SPRING, VALVE	1	1						
5	3	172B02-74200	SPOOL ASSY, SWING	1	1						
6	3	172458-74230	O-RING	2	2						
7	3	172458-74240	COVER, PILOT	1	1						
8	3	172458-74250	COVER, PILOT	1	1						
9	3	172458-74260	BOLT	4	4						
10	3	172458-74630	STAY, VALVE	1	1						
11	3	24315-000110	O-RING, 1BP11.0	1	1						
12	2	172B02-74820	VALVE ASSY, BLADE	1	1						
13	3	172B02-74150	SECTION ASSY, BLADE	1	1						
14	4	172458-74130	WIPER, DUST	1	1						
15	4	172458-74140	RETAINER, SEAL	1	1						
16	4	172458-74150	VALVE, REVERSE	1	1						
17	4	172458-74160	SPRING, VALVE	1	1						
19	4	172458-74170	CAP, SPRING	1	1						
20	4	172B02-74170	SPOOL ASSY, BLADE	1	1						
21	4	172458-74630	STAY, VALVE	1	1						
22	4	24311-000120	O-RING, 1AP12.0	1	1						
23	4	24315-000110	O-RING, 1BP11.0	1	1						
24	4	26450-050102	BOLT, M5X 10	2	2						
25	4	26450-050182	BOLT, M5X 18	2	2						
26	3	172B02-74730	RELIEF ASSY,ORV 9.8	1	1						

Remarks
* Not applied for angle blade specification.
* Control valve assy is shown in Fig.204(101I).

N:Old $\frac{\text{Yes}}{\text{No}}$ New, Q:Old $\frac{\text{No}}{\text{Yes}}$ New, R:Old $\frac{\text{Yes}}{\text{Yes}}$ New, S:Old $\frac{\text{No}}{\text{No}}$ New, W:Add, Z:Discontinued, F:Interchangeable by set, K:Q'ty Change

Copyright (C) YANMAR CO., LTD. All RightsReserved.

Fig.211. (101P)CONTROL VALVE(1/8)(ANGLE BLADE SPEC.)(THUMB BRACKET SPEC.)

(A)=VIO35-6A P(US)
(B)=VIO35-6A C(US)
(C)=
(D)=
(E)=
(F)=

No.	Lev.	Parts No.	Description	Q'ty (A)	(B)	(C)	(D)	(E)	(F)	I	R
1	1	172B03-74150	VALVE ASSY,CV ANG US	1	1						
2	1	26013-100162	BOLT, M10X 16	3	3						

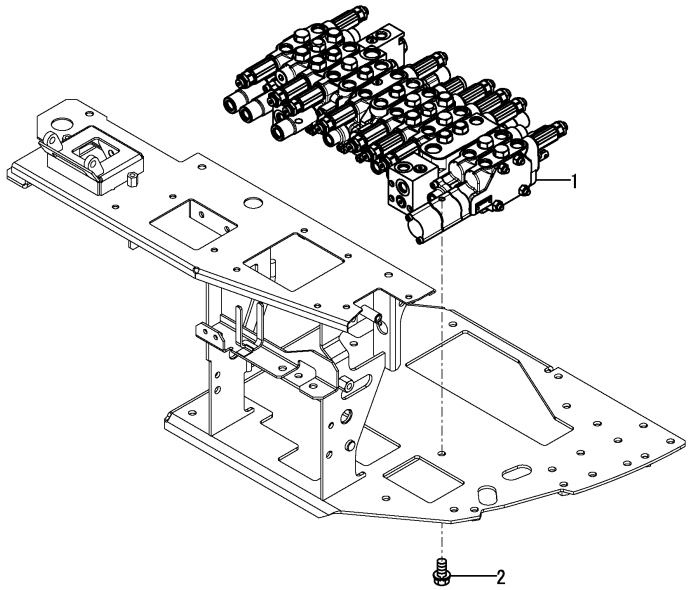

CONTROL VALVE ASSY
Fig.211 Ref.No.1.
INC.Fig.212～218.

CONTROL VALVE

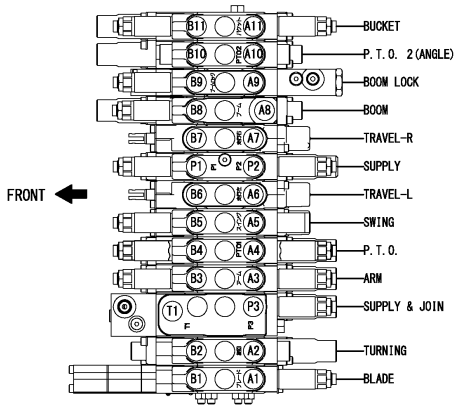

Remarks
* Exclusive figure for angle blade specification.

N:Old ←Yes/No→ New, Q:Old ←No/Yes→ New, R:Old ←Yes/Yes→ New, S:Old ←No/No→ New, W:Add, Z:Discontinued, F:Interchangeable by set, K:Q'ty Change

Copyright (C) YANMAR CO., LTD. All RightsReserved.

Fig.212. (101Q)CONTROL VALVE(2/8)(ANGLE BLADE SPEC.)(THUMB BRACKET SPEC.)

(A)=VIO35-6A P(US)
(B)=VIO35-6A C(US)
(C)=
(D)=
(E)=
(F)=

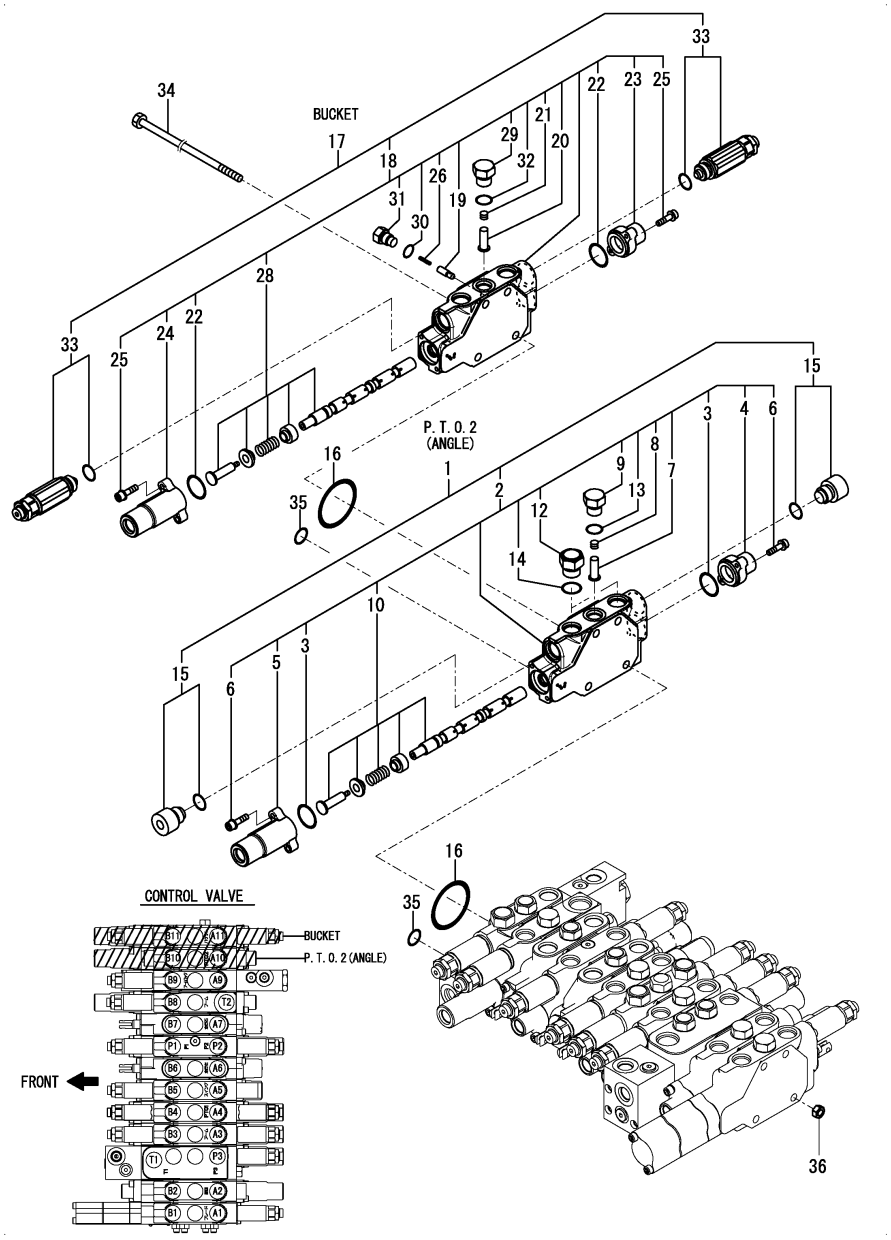

No.	Lev.	Parts No.	Description	Q'ty (A)	(B)	(C)	(D)	(E)	(F)	I	R
1	2	172B03-74390	VALVE ASSY, ANGLE	1	1						
2	3	172B03-74400	SECTION ASSY, ANGLE	1	1						
3	4	172458-74230	O-RING	2	2						
4	4	172458-74240	COVER, PILOT	1	1						
5	4	172458-74250	COVER, PILOT	1	1						
6	4	172458-74260	BOLT	4	4						
7	4	172490-74310	VALVE, REVERSE	1	1						
8	4	172490-74320	SPRING, VALVE	1	1						
9	4	172490-74330	STAY, VALVE	1	1						
10	4	172B03-74410	SPOOL ASSY, ANGLE	1	1						
12	4	172A47-75620	STAY, VALVE	2	2						
13	4	24315-000110	O-RING, 1BP11.0	1	1						
14	4	24315-000140	O-RING, 1BP14.0	2	2						
15	3	172A47-75460	PLUG ASSY, VALVE	2	2						
16	2	172458-74720	O-RING	12	12						
17	2	172B02-74900	VALVE ASSY, BUCKET	1	1						
18	3	172B02-74470	SECTION ASSY, BUCKET	1	1						
19	4	172499-70180	VALVE ASSY, REVERSE	1	1						
20	4	172458-74150	VALVE, REVERSE	1	1						
21	4	172458-74160	SPRING, VALVE	1	1						
22	4	172458-74230	O-RING	2	2						
23	4	172458-74240	COVER, PILOT	1	1						
24	4	172458-74250	COVER, PILOT	1	1						
25	4	172458-74260	BOLT	4	4						
26	4	172173-74280	SPRING	1	1						
28	4	172B02-74490	SPOOL ASSY, BUCKET	1	1						
29	4	172458-74630	STAY, VALVE	1	1						
30	4	172A47-74950	O-RING	1	1						
31	4	172A47-74970	STAY, VALVE	1	1						
32	4	24315-000110	O-RING, 1BP11.0	1	1						
33	3	172458-74710	VALVE, RELIEF	2	2						
34	2	172A47-75450	BOLT	4	4						
35	2	24311-000200	O-RING, 1AP20.0	12	12						
36	2	26716-080002	NUT, M8	4	4						

Remarks
* Exclusive figure for angle blade specification.
* Control valve assy is shown in Fig.211(101P).

N:Old $\xleftarrow[\text{No}]{\text{Yes}}$ New, Q:Old $\xleftarrow[\text{Yes}]{\text{No}}$ New, R:Old $\xleftarrow[\text{Yes}]{\text{Yes}}$ New, S:Old $\xleftarrow[\text{No}]{\text{No}}$ New, W:Add, Z:Discontinued, F:Interchangeable by set, K:Q'ty Change

Copyright (C) YANMAR CO., LTD. All RightsReserved.

Fig.213. (101R)CONTROL VALVE(3/8)(ANGLE BLADE SPEC.)(THUMB BRACKET SPEC.)

(A)=VIO35-6A P(US)
(B)=VIO35-6A C(US)
(C)=
(D)=
(E)=
(F)=

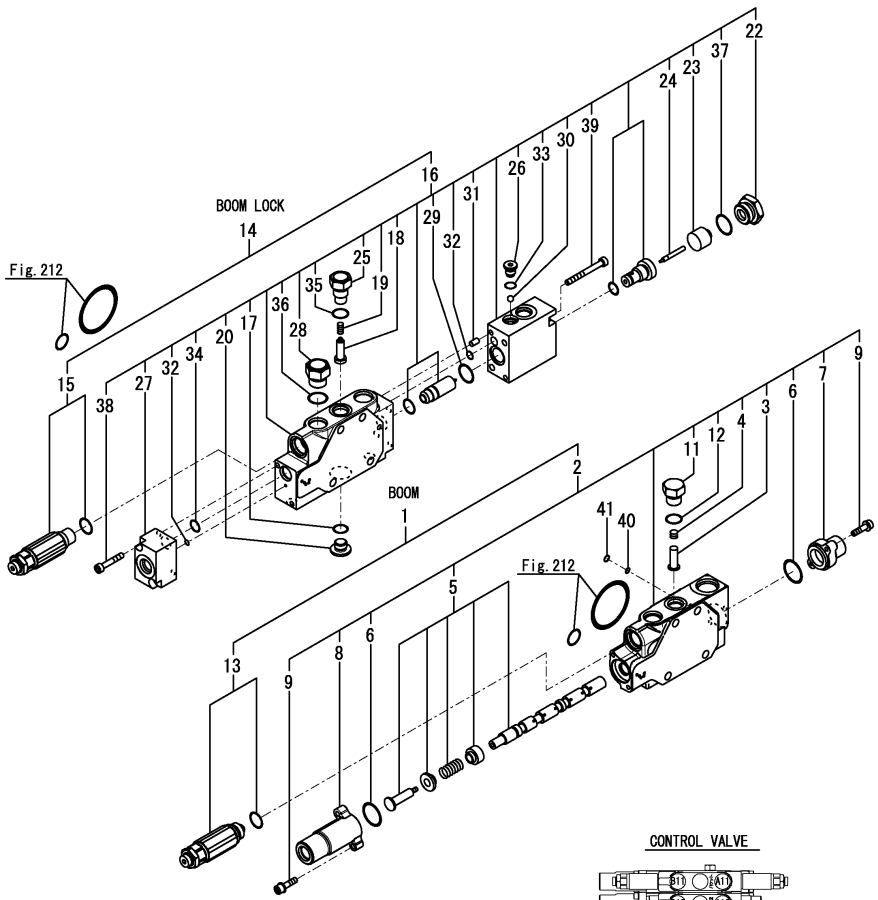

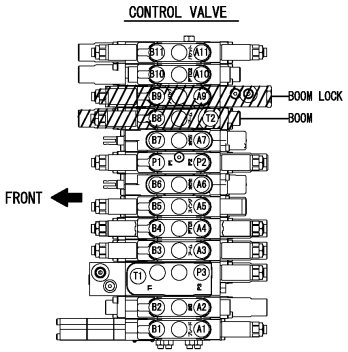

No.	Lev.	Parts No.	Description	Q'ty (A)	(B)	(C)	(D)	(E)	(F)	I	R
1	2	172B03-74240	VALVE ASSY, BOOM	1	1						
2	3	172B03-74180	SECTION ASSY, BOOM	1	1						
3	4	172458-74150	VALVE, REVERSE	1	1						
4	4	172458-74160	SPRING, VALVE	1	1						
5	4	172B03-74190	SPOOL ASSY, BOOM	1	1						
6	4	172458-74230	O-RING	2	2						
7	4	172458-74240	COVER, PILOT	1	1						
8	4	172458-74250	COVER, PILOT	1	1						
9	4	172458-74260	BOLT	4	4						
11	4	172458-74630	STAY, VALVE	1	1						
12	4	24315-000110	O-RING, 1BP11.0	1	1						
13	3	172A46-74340	VALVE ASSY, OVERLOAD	1	1						
14	2	172B02-74890	VALVE ASSY, LOCK	1	1						
15	3	172456-74440	VALVE, RELIEF	1	1						
16	3	172B02-74450	SECTION ASSY, LOCK	1	1						
17	4	172A47-74270	O-RING	1	1						
18	4	172458-74290	VALVE, REVERSE	1	1						
19	4	172458-74360	SPRING, VALVE	1	1						
20	4	172A47-74460	PLUG	1	1						
22	4	172A47-74560	BUSH PF1/2X1/4	1	1						
23	4	172A47-74570	PISTON B	1	1						
24	4	172A47-74580	PISTON A1	1	1						
25	4	172458-74640	STAY, VALVE	1	1						
26	4	172A47-74920	HOLDER, BALL	1	1						
27	4	172A47-74930	BODY, DISCHARGE	1	1						
28	4	172A47-75620	STAY, VALVE	1	1						
29	4	172A47-75680	O-RING	1	1						
30	4	172A47-75690	BALL, STEEL	1	1						
31	4	22312-050100	PIN, PARALLEL M5X10	2	2						
32	4	24311-000060	O-RING, 1AP6.0	2	2						
33	4	24315-000080	O-RING, 1BP8.0	1	1						
34	4	24315-000100	O-RING, 1BP10.0	1	1						
35	4	24315-000110	O-RING, 1BP11.0	1	1						
36	4	24315-000140	O-RING, 1BP14.0	1	1						
37	4	24315-000180	O-RING, 1BP18.0	1	1						
38	4	26450-050302	BOLT, M5X 30	2	2						
39	4	26450-060652	BOLT, M6X 65	2	2						
40	2	24315-000090	O-RING, 1BP9.0	1	1						
41	2	24315-000100	O-RING, 1BP10.0	1	1						

Remarks
* Exclusive figure for angle blade specification.
* Control valve assy is shown in Fig.211(101P).

N:Old ◄Yes/No► New, Q:Old ◄No/Yes► New, R:Old ◄Yes/Yes► New, S:Old ◄No/No► New, W:Add, Z:Discontinued, F:Interchangeable by set, K:Q'ty Change

Copyright (C) YANMAR CO., LTD. All RightsReserved.

Fig.214. (101S)CONTROL VALVE(4/8)(ANGLE BLADE SPEC.)(THUMB BRACKET SPEC.)

(A)=VIO35-6A P(US)
(B)=VIO35-6A C(US)
(C)=
(D)=
(E)=
(F)=

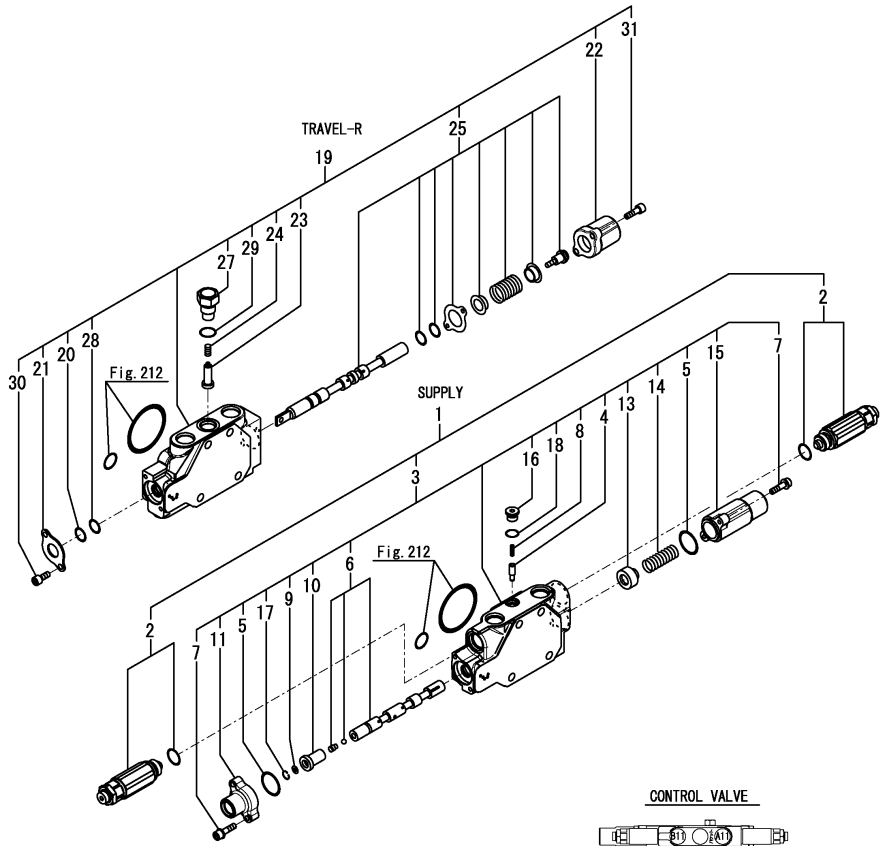

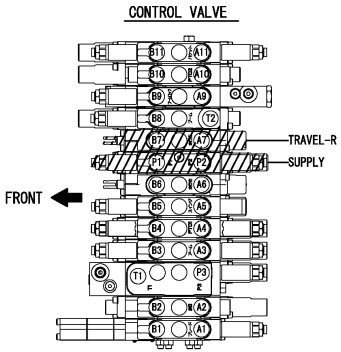

No.	Lev.	Parts No.	Description	Q'ty (A)	(B)	(C)	(D)	(E)	(F)	I	R
1	2	172B03-74230	VALVE ASSY, INLET	1	1						
2	3	172B03-74260	RELIEF ASSY, 23.1	2	2						
3	3	172B02-74380	SECTION ASSY, INLET	1	1						
4	4	172499-70180	VALVE ASSY, REVERSE	1	1						
5	4	172458-74230	O-RING	2	2						
6	4	172A46-74250	SPOOL ASSY, INLET	1	1						
7	4	172458-74260	BOLT	4	4						
8	4	172173-74280	SPRING	1	1						
9	4	172A47-74360	FILTER	1	1						
10	4	172A47-74370	PISTON	1	1						
11	4	172A47-74380	COVER, PILOT	1	1						
13	4	172458-74530	SEAT, SPRING	1	1						
14	4	172458-74540	SPRING, RETURN	1	1						
15	4	172458-74550	COVER, PILOT	1	1						
16	4	172458-74670	PLUG	1	1						
17	4	172A47-74980	CIRCLIP	1	1						
18	4	24315-000080	O-RING, 1BP8.0	1	1						
19	2	172B02-74400	SECTION ASSY,TRAVEL2	1	1						
20	3	172458-74130	WIPER, DUST	1	1						
21	3	172458-74140	RETAINER, SEAL	1	1						
22	3	172458-74170	CAP, SPRING	1	1						
23	3	172458-74290	VALVE, REVERSE	1	1						
24	3	172458-74360	SPRING, VALVE	1	1						
25	3	172B02-74370	SPOOL ASSY, TRAVEL	1	1						
27	3	172458-74640	STAY, VALVE	1	1						
28	3	24311-000120	O-RING, 1AP12.0	1	1						
29	3	24315-000110	O-RING, 1BP11.0	1	1						
30	3	26450-050102	BOLT, M5X 10	2	2						
31	3	26450-050182	BOLT, M5X 18	2	2						

Remarks
* Exclusive figure for angle blade specification.
* Control valve assy is shown in Fig.211(101P).

N:Old $\xleftrightarrow[\text{No}]{\text{Yes}}$ New, Q:Old $\xleftrightarrow[\text{Yes}]{\text{No}}$ New, R:Old $\xleftrightarrow[\text{Yes}]{\text{Yes}}$ New, S:Old $\xleftrightarrow[\text{No}]{\text{No}}$ New, W:Add, Z:Discontinued, F:Interchangeable by set, K:Q'ty Change

Copyright (C) YANMAR CO., LTD. All RightsReserved.

Fig.215. (101T)CONTROL VALVE(5/8)(ANGLE BLADE SPEC.)(THUMB BRACKET SPEC.)

(A)=VIO35-6A P(US)
(B)=VIO35-6A C(US)
(C)=
(D)=
(E)=
(F)=

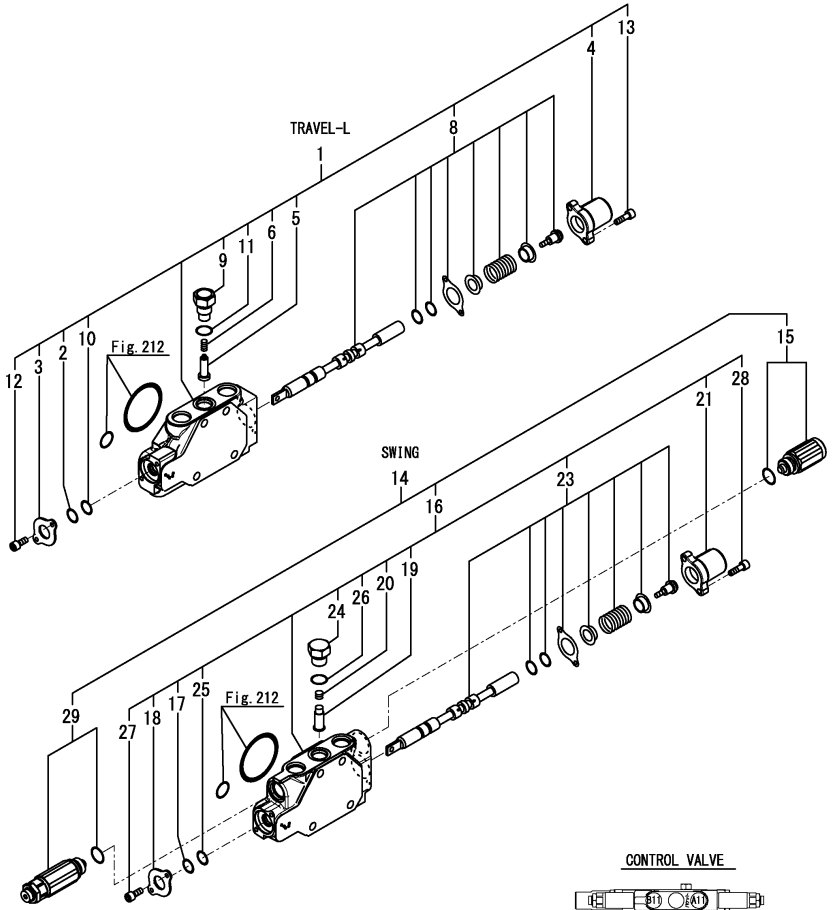

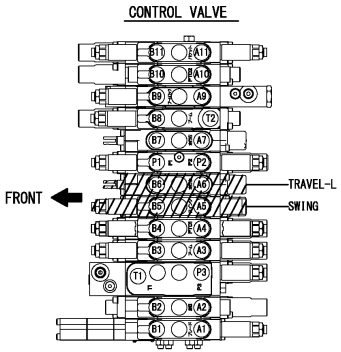

No.	Lev.	Parts No.	Description	Q'ty (A)	(B)	(C)	(D)	(E)	(F)	I	R
1	2	172B02-74350	SECTION ASSY,TRAVEL1	1	1						
2	3	172458-74130	WIPER, DUST	1	1						
3	3	172458-74140	RETAINER, SEAL	1	1						
4	3	172458-74170	CAP, SPRING	1	1						
5	3	172458-74290	VALVE, REVERSE	1	1						
6	3	172458-74360	SPRING, VALVE	1	1						
8	3	172B02-74370	SPOOL ASSY, TRAVEL	1	1						
9	3	172458-74640	STAY, VALVE	1	1						
10	3	24311-000120	O-RING, 1AP12.0	1	1						
11	3	24315-000110	O-RING, 1BP11.0	1	1						
12	3	26450-050102	BOLT, M5X 10	2	2						
13	3	26450-050182	BOLT, M5X 18	2	2						
14	2	172B02-74860	VALVE ASSY, B SWING	1	1						
15	3	172447-74230	ANTI-CAVITATION	1	1						
16	3	172B02-74320	SECTION ASSY,B SWING	1	1						
17	4	172458-74130	WIPER, DUST	1	1						
18	4	172458-74140	RETAINER, SEAL	1	1						
19	4	172458-74150	VALVE, REVERSE	1	1						
20	4	172458-74160	SPRING, VALVE	1	1						
21	4	172458-74170	CAP, SPRING	1	1						
23	4	172B02-74340	SPOOL ASSY, B SWING	1	1						
24	4	172458-74630	STAY, VALVE	1	1						
25	4	24311-000120	O-RING, 1AP12.0	1	1						
26	4	24315-000110	O-RING, 1BP11.0	1	1						
27	4	26450-050102	BOLT, M5X 10	2	2						
28	4	26450-050182	BOLT, M5X 18	2	2						
29	3	172458-74710	VALVE, RELIEF	1	1						

Remarks
* Exclusive figure for angle blade specification.
* Control valve assy is shown in Fig.211(101P).

N:Old $\frac{\text{Yes}}{\text{No}}$ New, Q:Old $\frac{\text{No}}{\text{Yes}}$ New, R:Old $\frac{\text{Yes}}{\text{Yes}}$ New, S:Old $\frac{\text{No}}{\text{No}}$ New, W:Add, Z:Discontinued, F:Interchangeable by set, K:Q'ty Change

Copyright (C) YANMAR CO., LTD. All RightsReserved.

Fig.216. (101U)CONTROL VALVE(6/8)(ANGLE BLADE SPEC.)(THUMB BRACKET SPEC.)

(A)=VIO35-6A P(US)
(B)=VIO35-6A C(US)
(C)=
(D)=
(E)=
(F)=

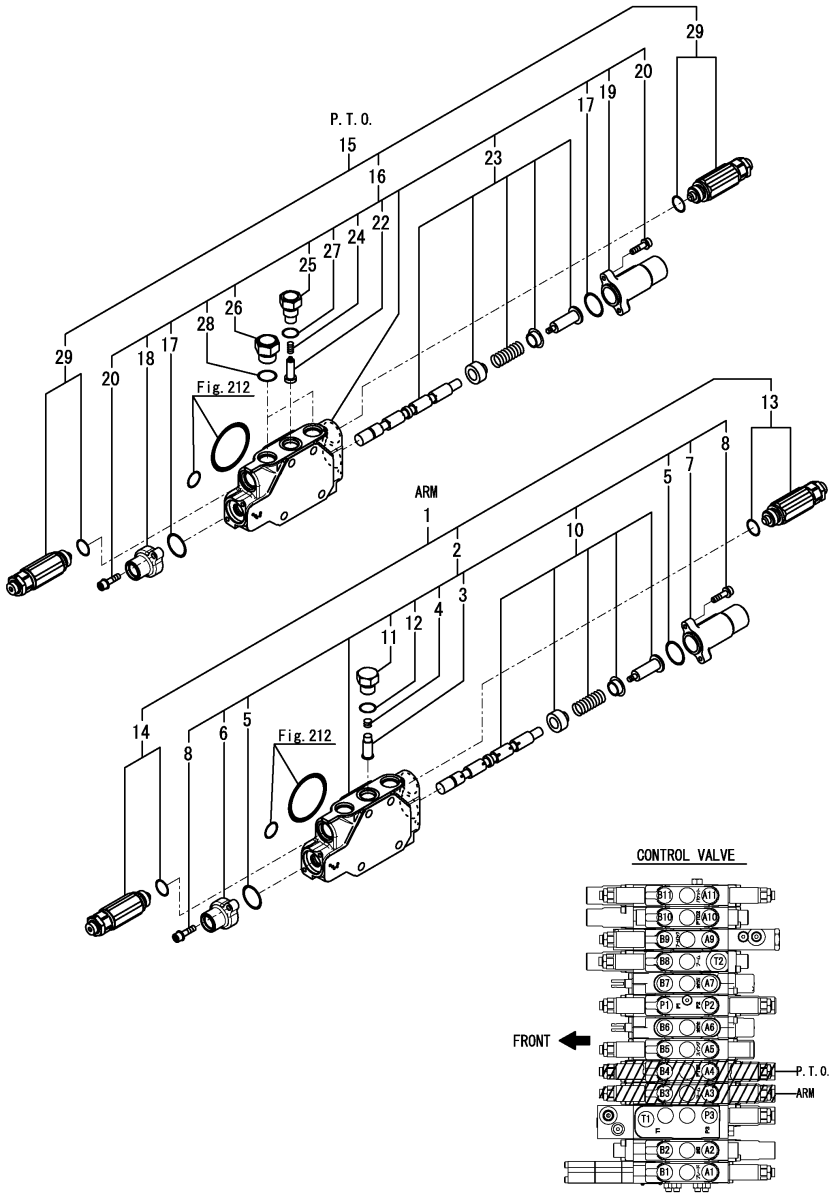

No.	Lev.	Parts No.	Description	Q'ty (A)	(B)	(C)	(D)	(E)	(F)	I	R
1	2	172B03-74220	VALVE ASSY, ARM	1	1						
2	3	172B02-74260	SECTION ASSY, ARM	1	1						
3	4	172458-74150	VALVE, REVERSE	1	1						
4	4	172458-74160	SPRING, VALVE	1	1						
5	4	172458-74230	O-RING	2	2						
6	4	172458-74240	COVER, PILOT	1	1						
7	4	172458-74250	COVER, PILOT	1	1						
8	4	172458-74260	BOLT	4	4						
10	4	172B02-74280	SPOOL ASSY, ARM	1	1						
11	4	172458-74630	STAY, VALVE	1	1						
12	4	24315-000110	O-RING, 1BP11.0	1	1						
13	3	172A46-74340	VALVE ASSY, OVERLOAD	1	1						
14	3	172458-74710	VALVE, RELIEF	1	1						
15	2	172B03-74250	VALVE ASSY, PTO US	1	1						
16	3	172B02-74290	SECTION ASSY, PTO	1	1						
17	4	172458-74230	O-RING	2	2						
18	4	172458-74240	COVER, PILOT	1	1						
19	4	172458-74250	COVER, PILOT	1	1						
20	4	172458-74260	BOLT	4	4						
22	4	172490-74310	VALVE, REVERSE	1	1						
23	4	172B02-74310	SPOOL ASSY, PTO	1	1						
24	4	172490-74320	SPRING, VALVE	1	1						
25	4	172490-74330	STAY, VALVE	1	1						
26	4	172A47-75620	STAY, VALVE	2	2						
27	4	24315-000110	O-RING, 1BP11.0	1	1						
28	4	24315-000140	O-RING, 1BP14.0	2	2						
29	3	172B03-74820	RELIEF ASSY,ORV 17.2	2	2						

Remarks
* Exclusive figure for angle blade specification.
* Control valve assy is shown in Fig.211(101P).

N:Old $\xleftarrow[\text{No}]{\text{Yes}}$ New, Q:Old $\xleftarrow[\text{Yes}]{\text{No}}$ New, R:Old $\xleftarrow[\text{Yes}]{\text{Yes}}$ New, S:Old $\xleftarrow[\text{No}]{\text{No}}$ New, W:Add, Z:Discontinued, F:Interchangeable by set, K:Q'ty Change

Copyright (C) YANMAR CO., LTD. All RightsReserved.

Fig.217. (101V)CONTROL VALVE(7/8)(ANGLE BLADE SPEC.)(THUMB BRACKET SPEC.)

(A)=VIO35-6A P(US)
(B)=VIO35-6A C(US)
(C)=
(D)=
(E)=
(F)=

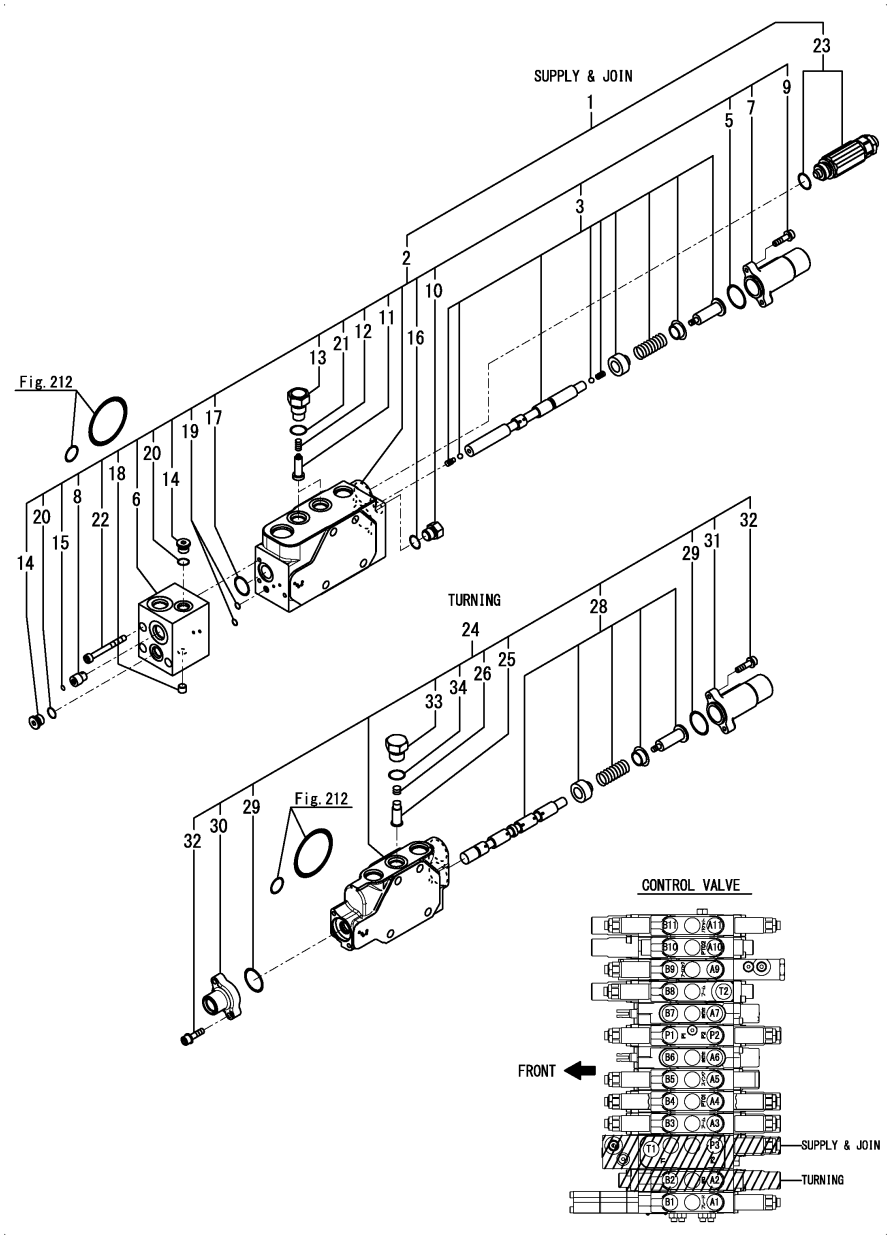

No.	Lev.	Parts No.	Description	Q'ty (A)	(B)	(C)	(D)	(E)	(F)	I	R
1	2	172B03-74210	VALVE ASSY, CONFLUX	1	1						
2	3	172B03-74160	SECTION ASSY,CONFLUX	1	1						
3	4	172B03-74170	SPOOL ASSY, CONFLUX	1	1						
5	4	172458-74230	O-RING	1	1						
6	4	172B02-74240	BLOCK, PILOT	1	1						
7	4	172458-74250	COVER, PILOT	1	1						
8	4	172B02-74250	PLUG, THROTTLE	1	1						
9	4	172458-74260	BOLT	2	2						
10	4	172A47-74260	PLUG	1	1						
11	4	172458-74290	VALVE, REVERSE	2	2						
12	4	172458-74360	SPRING, VALVE	2	2						
13	4	172458-74640	STAY, VALVE	2	2						
14	4	172458-74670	PLUG	2	2						
15	4	172499-74860	FILTER	1	1						
16	4	172A47-74950	O-RING	1	1						
17	4	172A47-75680	O-RING	1	1						
18	4	172A47-75720	PLUG NPT1/16	1	1						
19	4	24315-000050	O-RING, 1BP5.0	2	2						
20	4	24315-000080	O-RING, 1BP8.0	2	2						
21	4	24315-000110	O-RING, 1BP11.0	2	2						
22	4	26450-050502	BOLT, M5X 50	3	3						
23	3	172B03-74270	RELIEF ASSY, 21.1	1	1						
24	2	172B03-74340	SECTION ASSY,SWING F	1	1						
25	3	172458-74150	VALVE, REVERSE	1	1						
26	3	172458-74160	SPRING, VALVE	1	1						
28	3	172B02-74200	SPOOL ASSY, SWING	1	1						
29	3	172458-74230	O-RING	2	2						
30	3	172458-74240	COVER, PILOT	1	1						
31	3	172458-74250	COVER, PILOT	1	1						
32	3	172458-74260	BOLT	4	4						
33	3	172458-74630	STAY, VALVE	1	1						
34	3	24315-000110	O-RING, 1BP11.0	1	1						

Remarks
* Exclusive figure for angle blade specification.
* Control valve assy is shown in Fig.211(101P).

N:Old $\frac{\text{Yes}}{\text{No}}$ New, Q:Old $\frac{\text{No}}{\text{Yes}}$ New, R:Old $\frac{\text{Yes}}{\text{Yes}}$ New, S:Old $\frac{\text{No}}{\text{No}}$ New, W:Add, Z:Discontinued, F:Interchangeable by set, K:Q'ty Change

Copyright (C) YANMAR CO., LTD. All RightsReserved.

Fig.218. (101W)CONTROL VALVE(8/8)(ANGLE BLADE SPEC.)(THUMB BRACKET SPEC.)

(A)=VIO35-6A P(US)
(B)=VIO35-6A C(US)
(C)=
(D)=
(E)=
(F)=

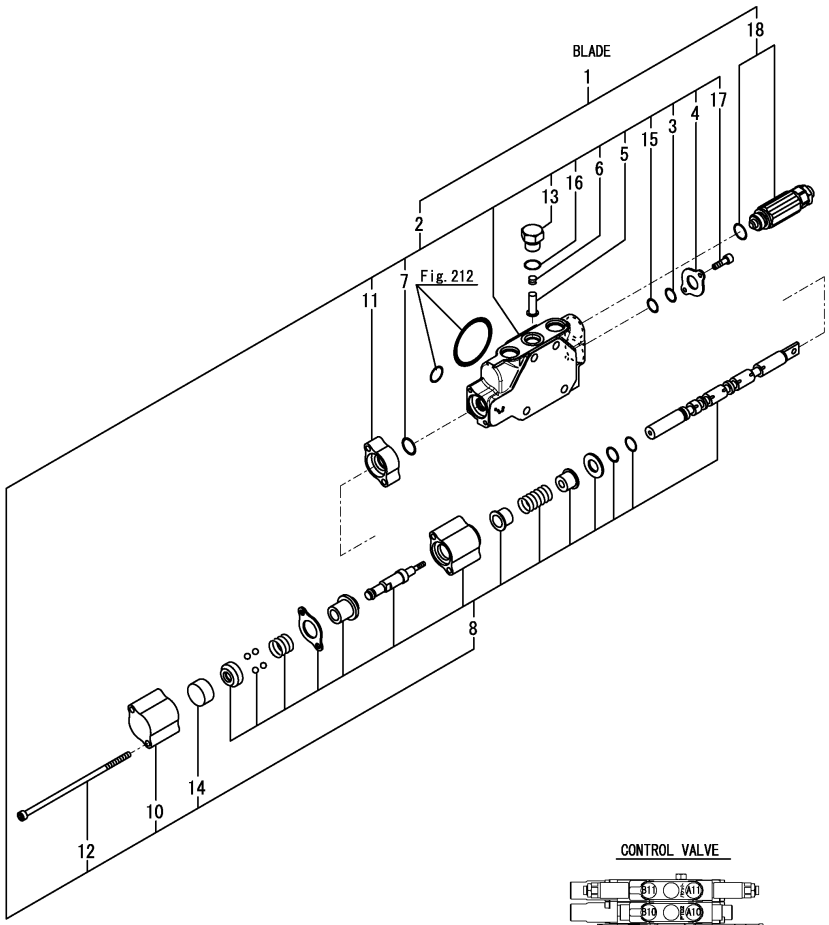

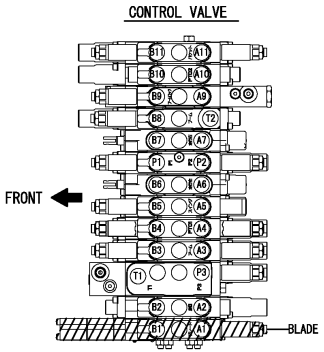

No.	Lev.	Parts No.	Description	Q'ty (A)	(B)	(C)	(D)	(E)	(F)	I	R
1	2	172B03-74310	VALVE ASSY, BLADE FL	1	1						
2	3	172B03-74320	SECTION ASSY,BLADE F	1	1						
3	4	172458-74130	WIPER, DUST	1	1						
4	4	172458-74140	RETAINER, SEAL	1	1						
5	4	172458-74150	VALVE, REVERSE	1	1						
6	4	172458-74160	SPRING, VALVE	1	1						
7	4	172458-74230	O-RING	1	1						
8	4	172B03-74330	SPOOL ASSY, BLADE FL	1	1						
10	4	172B05-74350	COVER, RETURN SPRING	1	1						
11	4	172B05-74360	CASE, SEAL	1	1						
12	4	172B05-74370	BOLT, SOCKET M5X100	2	2						
13	4	172458-74630	STAY, VALVE	1	1						
14	4	172531-74710	STOPPER	1	1						
15	4	24311-000120	O-RING, 1AP12.0	1	1						
16	4	24315-000110	O-RING, 1BP11.0	1	1						
17	4	26450-050102	BOLT, M5X 10	2	2						
18	3	172B02-74730	RELIEF ASSY,ORV 9.8	1	1						

Remarks
* Exclusive figure for angle blade specification.
* Control valve assy is shown in Fig.211(101P).

N:Old ◄Yes/No► New, Q:Old ◄No/Yes► New, R:Old ◄Yes/Yes► New, S:Old ◄No/No► New, W:Add, Z:Discontinued, F:Interchangeable by set, K:Q'ty Change

Copyright (C) YANMAR CO., LTD. All RightsReserved.

Fig.102. REMOTE CONTROL VALVE(RIGHT)

(A)=VIO35-6A P(US)
(B)=VIO35-6A C(US)
(C)=
(D)=
(E)=
(F)=

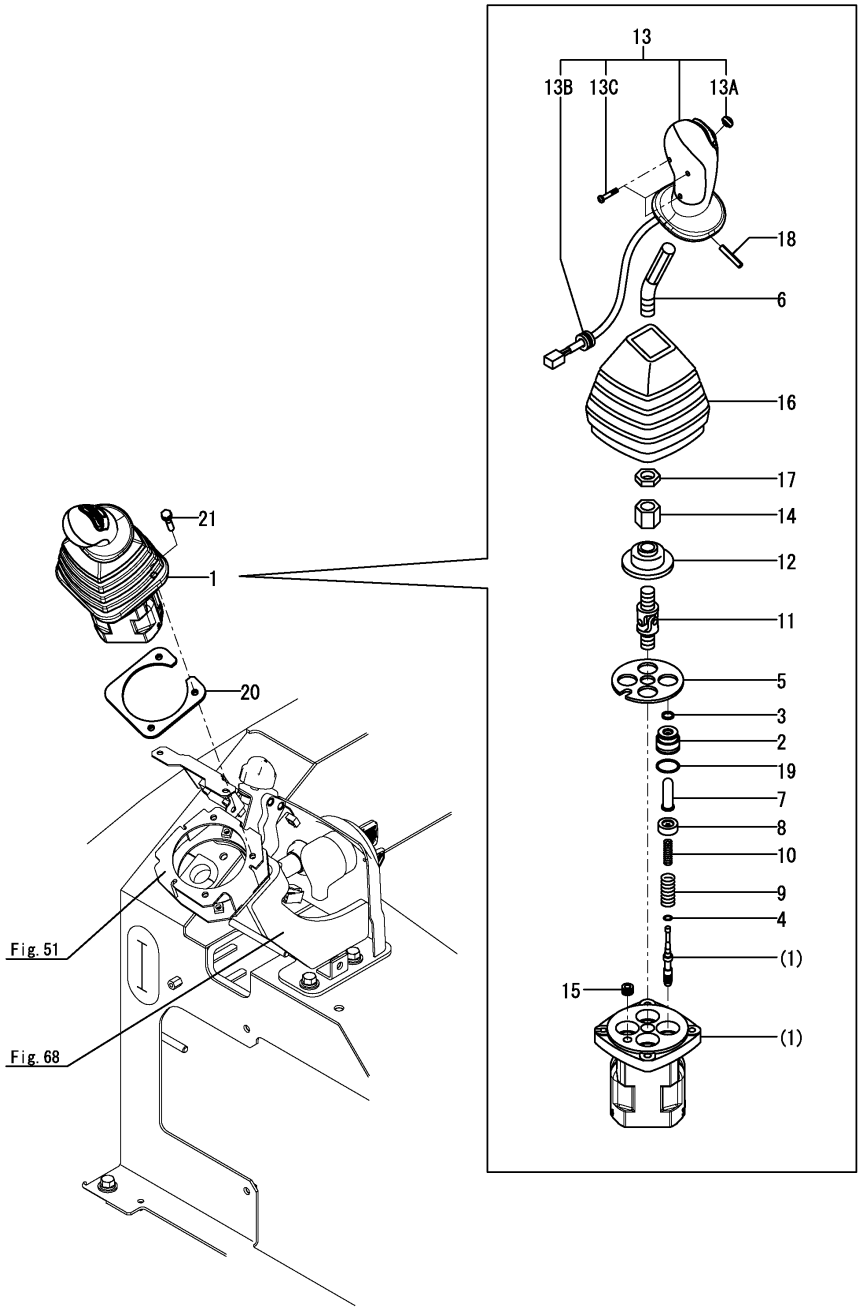

No.	Lev.	Parts No.	Description	Q'ty (A)	(B)	(C)	(D)	(E)	(F)	I	R
1	1	172B03-74530	VALVE ASSY,R-PB	1	1						
2	2	172151-73400	PLUG	4	4						
3	2	172151-73420	SEAL	4	4						
4	2	172151-73450	WASHER	4	4						
5	2	172A64-74590	PLATE	1	1						
6	2	172B03-74590	LEVER	1	1						
7	2	172A64-74600	ROD,PUSH	4	4						
8	2	172A64-74610	SEAT, SPRING	4	4						
9	2	172A64-74620	SPRING	4	4						
10	2	172A64-74630	SPRING	4	4						
11	2	172A64-74640	JOINT	1	1						
12	2	172A64-74650	PLATE	1	1						
13	2	172B03-74650	HANDLE ASSY,PB	1	1						
13A	3	172B03-74660	COVER, SWITCH	1	1					W	
	(A=MXXXXX)	(B=MXXXXX)									
13B	3	172A64-74670	BUSH	1	1					W	
	(A=MXXXXX)	(B=MXXXXX)									
13C	3	22853-300161	SCREW, 3.0 X 16	3	3					W	
	(A=MXXXXX)	(B=MXXXXX)									
14	2	172A64-74660	NUT	1	1						
15	2	172A64-74670	BUSH	1	1					Z	
	(A=MXXXXX)	(B=MXXXXX)									
16	2	172A64-74680	BELLOWS	1	1						
17	2	172A64-74900	NUT, LOCK	1	1						
18	2	172A64-74930	PIN,SPRING	1	1						
19	2	24315-000200	O-RING, 1BP20.0	4	4						
20	1	172A78-74650	PLATE ASSY,VALVE	1	1						
21	1	26013-060302	BOLT, M6X 30	3	3						

N:Old $\overset{\text{Yes}}{\underset{\text{No}}{\leftrightarrows}}$ New, Q:Old $\overset{\text{No}}{\underset{\text{Yes}}{\leftrightarrows}}$ New, R:Old $\overset{\text{Yes}}{\underset{\text{Yes}}{\leftrightarrows}}$ New, S:Old $\overset{\text{No}}{\underset{\text{No}}{\leftrightarrows}}$ New, W:Add, Z:Discontinued, F:Interchangeable by set, K:Q'ty Change

Copyright (C) YANMAR CO., LTD. All RightsReserved.

Fig.103. REMOTE CONTROL VALVE(LEFT)

(A)=VIO35-6A P(US)
(B)=VIO35-6A C(US)
(C)=
(D)=
(E)=
(F)=

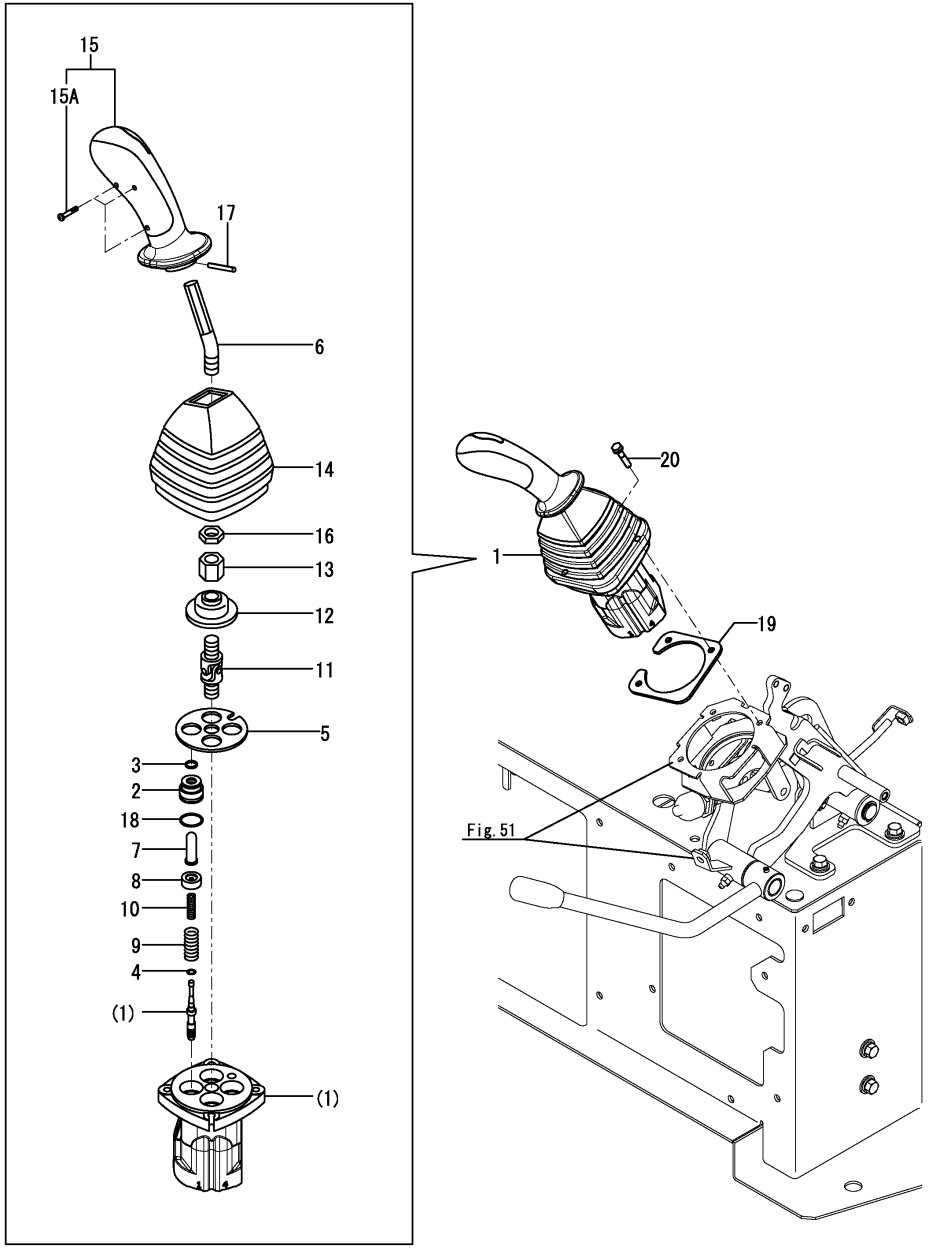

No.	Lev.	Parts No.	Description	Q'ty (A)	(B)	(C)	(D)	(E)	(F)	I	R
1	1	172B03-74560	VALVE ASSY,L-N	1	1						
2	2	172151-73400	PLUG	4	4						
3	2	172151-73420	SEAL	4	4						
4	2	172151-73450	WASHER	4	4						
5	2	172A64-74590	PLATE	1	1						
6	2	172B03-74590	LEVER	1	1						
7	2	172A64-74600	ROD,PUSH	4	4						
8	2	172A64-74610	SEAT, SPRING	4	4						
9	2	172A64-74620	SPRING	4	4						
10	2	172A64-74630	SPRING	4	4						
11	2	172A64-74640	JOINT	1	1						
12	2	172A64-74650	PLATE	1	1						
13	2	172A64-74660	NUT	1	1						
14	2	172A64-74680	BELLOWS	1	1						
15	2	172B03-74680	HANDLE ASSY,N	1	1						
15A	3	22853-300161	SCREW, 3.0 X 16	3	3					W	
	(A=MXXXXX)	(B=MXXXXX)									
16	2	172A64-74900	NUT, LOCK	1	1						
17	2	172A64-74930	PIN,SPRING	1	1						
18	2	24315-000200	O-RING, 1BP20.0	4	4						
19	1	172A78-74650	PLATE ASSY,VALVE	1	1						
20	1	26013-060302	BOLT, M6X 30	3	3						

N:Old ◄Yes/No► New, Q:Old ◄No/Yes► New, R:Old ◄Yes/Yes► New, S:Old ◄No/No► New, W:Add, Z:Discontinued, F:Interchangeable by set, K:Q'ty Change

Copyright (C) YANMAR CO., LTD. All RightsReserved.

Fig.104. 2-WAY VALVE

(A)=VIO35-6A P(US)
(B)=VIO35-6A C(US)
(C)=
(D)=
(E)=
(F)=

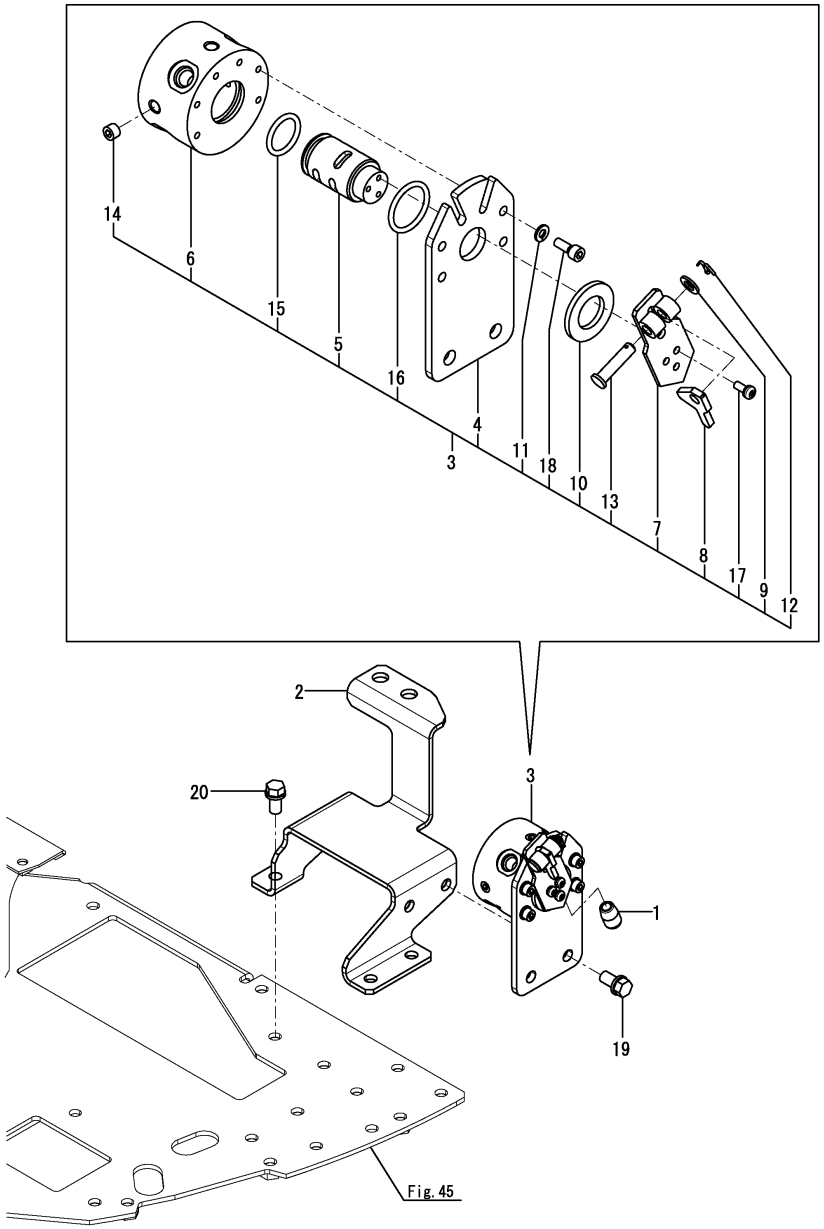

No.	Lev.	Parts No.	Description	Q'ty (A)	(B)	(C)	(D)	(E)	(F)	I	R
1	1	172157-58830	KNOB, 6.5X18X35	1	1						
2	1	172B03-74370	BRACKET ASSY, 2WAY	1	1						
3	1	172B03-74700	VALVE ASSY, 2-WAY	1	1						
4	2	172B03-74420	STAY, 2WAY	1	1						
5	2	172437-74711	SHAFT	1	1						
6	2	172437-74720	BLOCK,VALVE	1	1						
7	2	172A36-74750	LEVER	1	1						
8	2	172A36-74780	PLATE,LOCK	1	1						
9	2	22117-080000	WASHER, 8	1	1						
10	2	22137-240000	WASHER, 24	1	1						
11	2	22217-060000	WASHER, SPRING 6	4	4						
12	2	22417-200160	PIN, COTTER 2.0X16	1	1						
13	2	22487-080300	PIN, H 8X 30	1	1						
14	2	23871-010000	PLUG, R01	4	4						
15	2	24311-000250	O-RING, 1AP25.0	1	1						
16	2	24311-000320	O-RING, 1AP32.0	1	1						
17	2	26022-050122	SCREW, M5X12	3	3						
18	2	26450-060162	BOLT, M6X 16	4	4						
19	1	26013-100202	BOLT, M10X 20	2	2						
20	1	26013-100202	BOLT, M10X 20	3	3						

Remarks
* Not applied for angle blade specification.

N:Old $\xleftrightarrow[\text{No}]{\text{Yes}}$ New, Q:Old $\xleftrightarrow[\text{Yes}]{\text{No}}$ New, R:Old $\xleftrightarrow[\text{Yes}]{\text{Yes}}$ New, S:Old $\xleftrightarrow[\text{No}]{\text{No}}$ New, W:Add, Z:Discontinued, F:Interchangeable by set, K:Q'ty Change

Copyright (C) YANMAR CO., LTD. All RightsReserved.

Fig.174. (104A)2-WAY VALVE(ANGLE BLADE SPEC.)

(A)=VIO35-6A P(US)
(B)=VIO35-6A C(US)
(C)=
(D)=
(E)=
(F)=

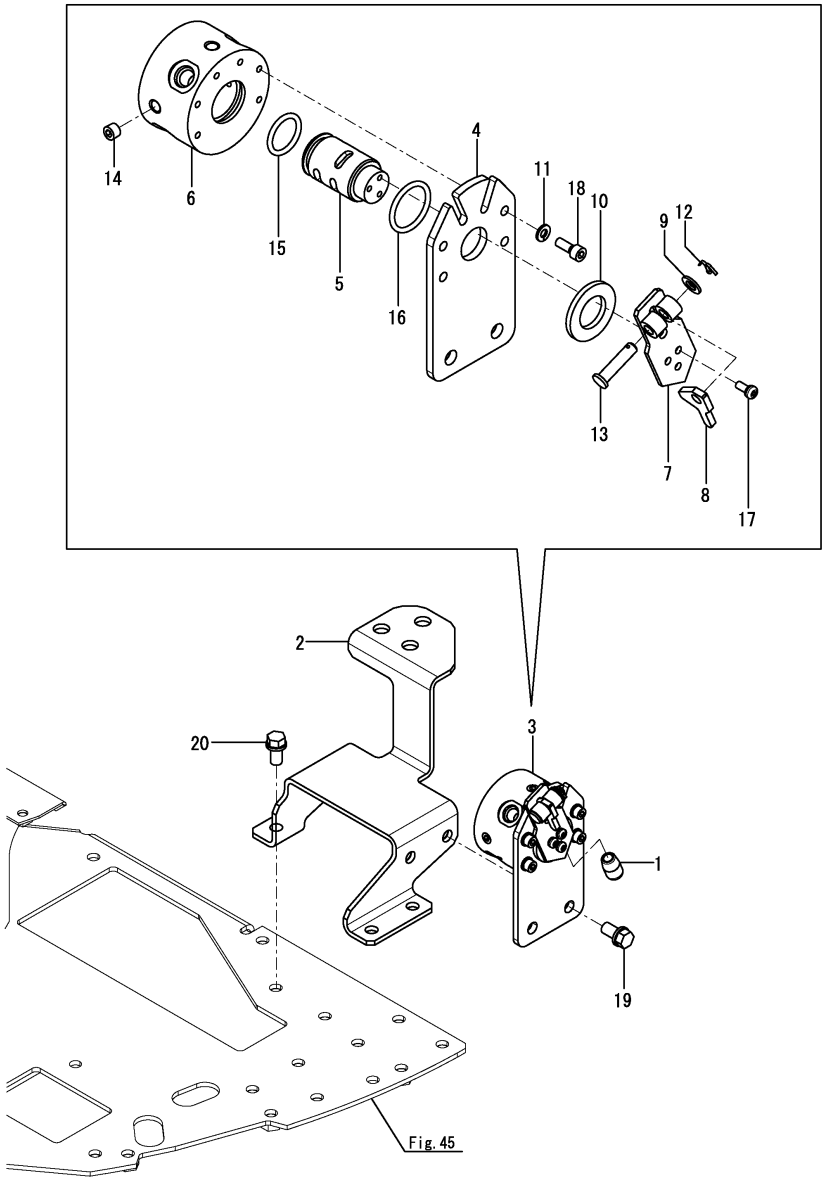

No.	Lev.	Parts No.	Description	Q'ty (A)	(B)	(C)	(D)	(E)	(F)	I	R
1	1	172157-58830	KNOB, 6.5X18X35	1	1						
2	1	172B03-74440	BRACKET ASSY,2WAY A	1	1						
3	1	172B03-74700	VALVE ASSY, 2-WAY	1	1						
4	2	172B03-74420	STAY, 2WAY	1	1						
5	2	172437-74711	SHAFT	1	1						
6	2	172437-74720	BLOCK,VALVE	1	1						
7	2	172A36-74750	LEVER	1	1						
8	2	172A36-74780	PLATE,LOCK	1	1						
9	2	22117-080000	WASHER, 8	1	1						
10	2	22137-240000	WASHER, 24	1	1						
11	2	22217-060000	WASHER, SPRING 6	4	4						
12	2	22417-200160	PIN, COTTER 2.0X16	1	1						
13	2	22487-080300	PIN, H 8X 30	1	1						
14	2	23871-010000	PLUG, R01	4	4						
15	2	24311-000250	O-RING, 1AP25.0	1	1						
16	2	24311-000320	O-RING, 1AP32.0	1	1						
17	2	26022-050122	SCREW, M5X12	3	3						
18	2	26450-060162	BOLT, M6X 16	4	4						
19	1	26013-100202	BOLT, M10X 20	2	2						
20	1	26013-100202	BOLT, M10X 20	3	3						

Remarks
* Exclusive figure for angle blade specification.

N:Old $\xleftrightarrow[\text{No}]{\text{Yes}}$ New, Q:Old $\xleftrightarrow[\text{Yes}]{\text{No}}$ New, R:Old $\xleftrightarrow[\text{Yes}]{\text{Yes}}$ New, S:Old $\xleftrightarrow[\text{No}]{\text{No}}$ New, W:Add, Z:Discontinued, F:Interchangeable by set, K:Q'ty Change

Copyright (C) YANMAR CO., LTD. All RightsReserved.

Fig.105. SOLENOID VALVE(ESS : PTO)

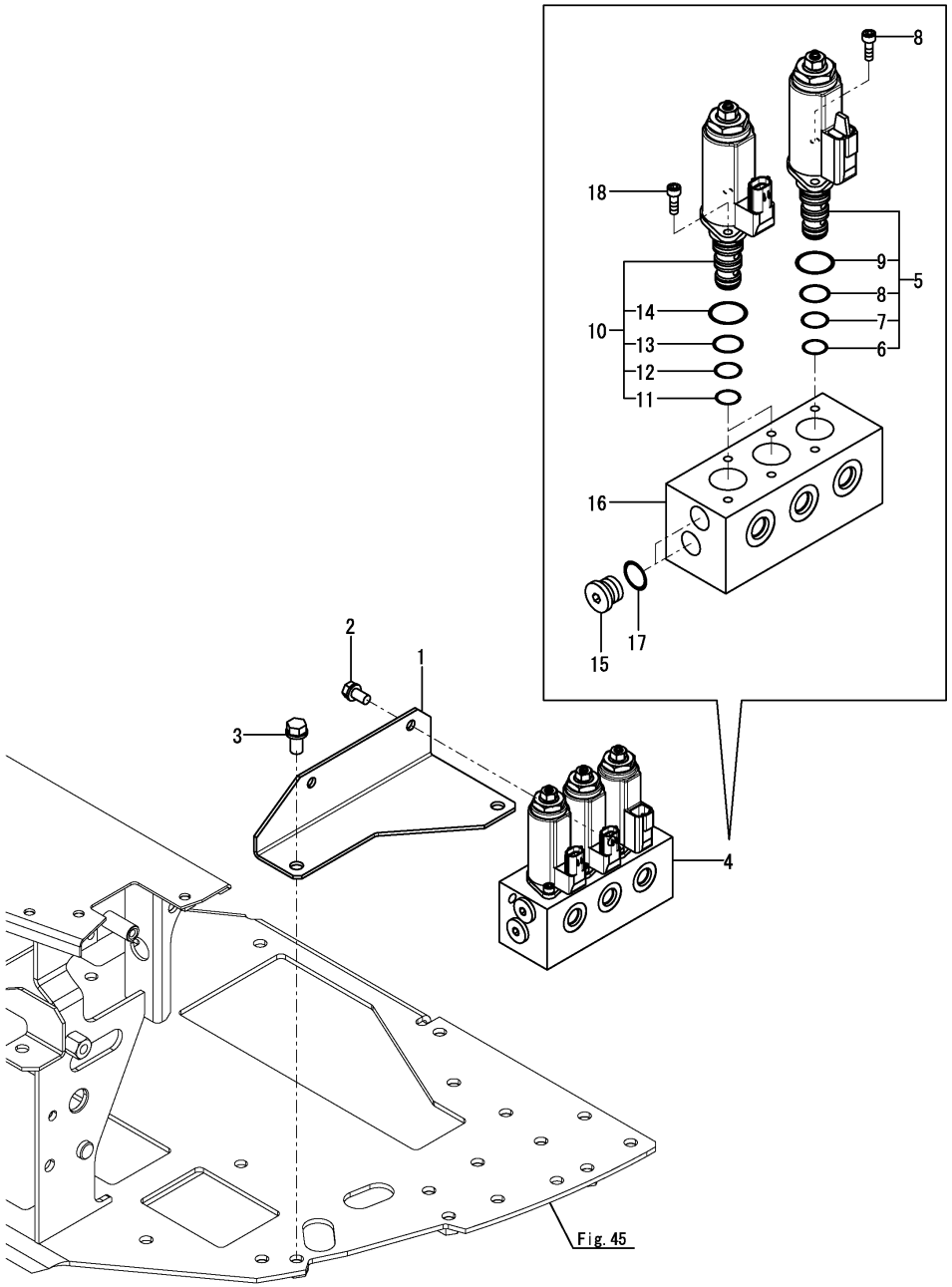

(A)=VIO35-6A P(US) (D)=
(B)=VIO35-6A C(US) (E)=
(C)= (F)=

No.	Lev.	Parts No.	Description	Q'ty (A)	(B)	(C)	(D)	(E)	(F)	I	R
1	1	172B03-74950	STAY , SOL 3 K		1						
2	1	26013-080162	BOLT, M8X 16		2						
3	1	26013-100202	BOLT, M10X 20		2						
4	1	172B03-74730	VALVE ASSY,PPP		1						
5	2	172B03-74740	CARTRIDGE ASSY,P0.7A		1					W	
		(B=MXXXXX)									
6	3	172B03-74860	O-RING, 1B AS 013		1						
7	3	172B03-74870	O-RING, 1B AS 014		1						
8	3	172B03-74880	O-RING, 1B AS 015		1						
9	3	24315-000200	O-RING, 1BP20.0		1						
10	2	172B03-74750	CARTRIDGE ASSY,P1.6A		2					W	
		(B=MXXXXX)									
11	3	172B03-74860	O-RING, 1B AS 013		2						
12	3	172B03-74870	O-RING, 1B AS 014		2						
13	3	172B03-74880	O-RING, 1B AS 015		2						
14	3	24315-000200	O-RING, 1BP20.0		2						
15	2	172A47-74770	PLUG		2					W	
		(B=MXXXXX)									
16	2	172B03-74780	BLOCK, 3		1					W	
		(B=MXXXXX)									
17	2	24315-000110	O-RING, 1BP11.0		2					W	
		(B=MXXXXX)									
18	2	26450-050122	BOLT, M5X 12		6					W	
		(B=MXXXXX)									

N:Old $\frac{\text{Yes}}{\text{No}}$ New, Q:Old $\frac{\text{No}}{\text{Yes}}$ New, R:Old $\frac{\text{Yes}}{\text{Yes}}$ New, S:Old $\frac{\text{No}}{\text{No}}$ New, W:Add, Z:Discontinued, F:Interchangeable by set, K:Q'ty Change

Copyright (C) YANMAR CO., LTD. All RightsReserved.

Fig.106. SOLENOID VALVE(P.T.O.)

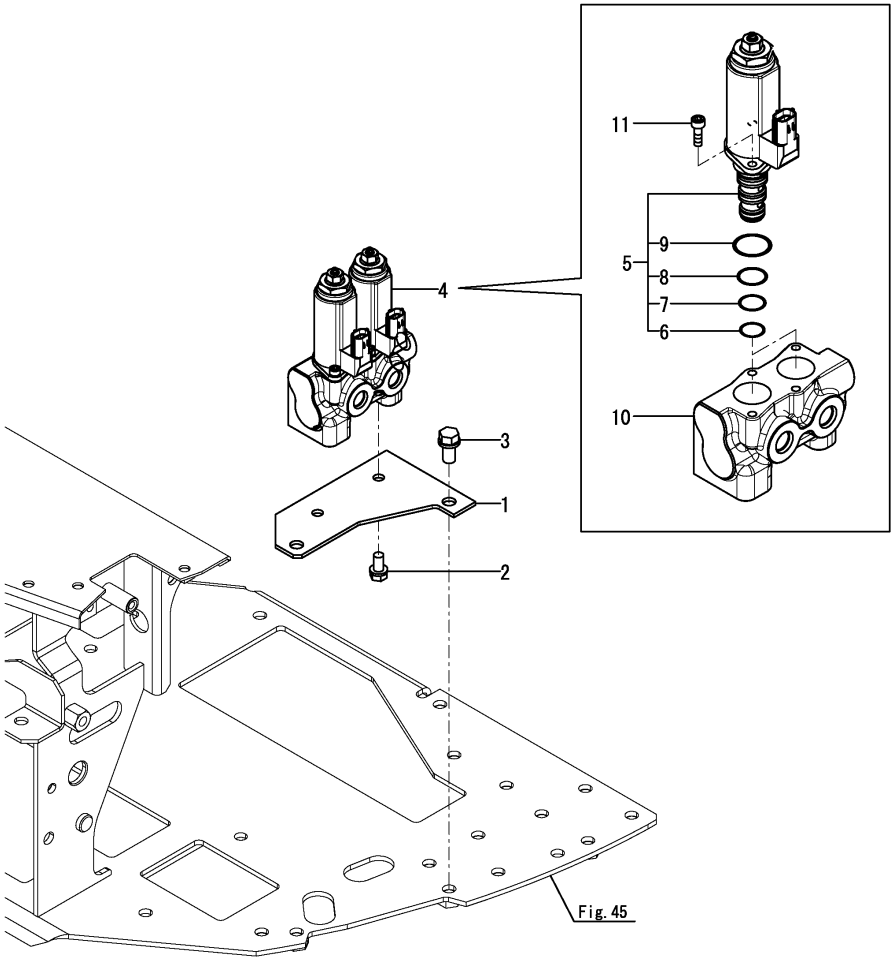

(A)=VIO35-6A P(US) (D)=
(B)=VIO35-6A C(US) (E)=
(C)= (F)=

No.	Lev.	Parts No.	Description	Q'ty (A)	(B)	(C)	(D)	(E)	(F)	I	R
1	1	172B03-74930	STAY , SOL 2 K	1	1						
2	1	26013-080162	BOLT, M8X 16	2	2						
3	1	26013-100202	BOLT, M10X 20	2	2						
4	1	172B03-74720	VALVE ASSY,PP	1	1						
5	2	172B03-74750	CARTRIDGE ASSY,P1.6A	2	2					W	
	(A=MXXXXX)	(B=MXXXXX)									
6	3	172B03-74860	O-RING, 1B AS 013	2	2						
7	3	172B03-74870	O-RING, 1B AS 014	2	2						
8	3	172B03-74880	O-RING, 1B AS 015	2	2						
9	3	24315-000200	O-RING, 1BP20.0	2	2						
10	2	172B03-74770	BLOCK, 2	2	2					W	
	(A=MXXXXX)	(B=MXXXXX)									
11	2	172B03-74790	BOLT, 10.9 M5X12	4	4					W	
	(A=MXXXXX)	(B=MXXXXX)									

N:Old $\frac{\text{Yes}}{\text{No}}$ New, Q:Old $\frac{\text{No}}{\text{Yes}}$ New, R:Old $\frac{\text{Yes}}{\text{Yes}}$ New, S:Old $\frac{\text{No}}{\text{No}}$ New, W:Add, Z:Discontinued, F:Interchangeable by set, K:Q'ty Change

Copyright (C) YANMAR CO., LTD. All RightsReserved.

Fig.175. (106A)SOLENOID VALVE(P.T.O.2)(ANGLE BLADE SPEC.)

(A)=VIO35-6A P(US)
(B)=VIO35-6A C(US)
(C)=
(D)=
(E)=
(F)=

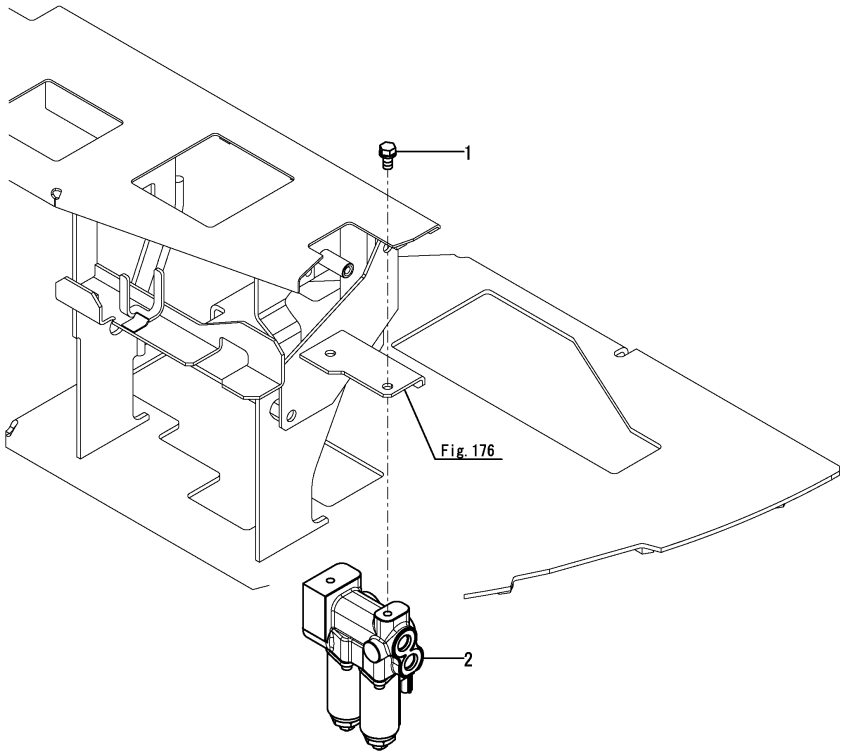

No.	Lev.	Parts No.	Description	Q'ty (A)	(B)	(C)	(D)	(E)	(F)	I	R
1	1	26013-080162	BOLT, M8X 16	2	2						
2	1	172B05-74710	VALVE ASSY,CC	1	1						

Remarks
* Exclusive figure for angle blade specification.

N:Old ◄Yes/No► New, Q:Old ◄No/Yes► New, R:Old ◄Yes/Yes► New, S:Old ◄No/No► New, W:Add, Z:Discontinued, F:Interchangeable by set, K:Q'ty Change

Copyright (C) YANMAR CO., LTD. All RightsReserved.

Fig.176. (106B)SOLENOID VALVE BRACKET(P.T.O.2)(ANGLE BLADE SPEC.)

(A)=VIO35-6A P(US)
(B)=VIO35-6A C(US)
(C)=
(D)=
(E)=
(F)=

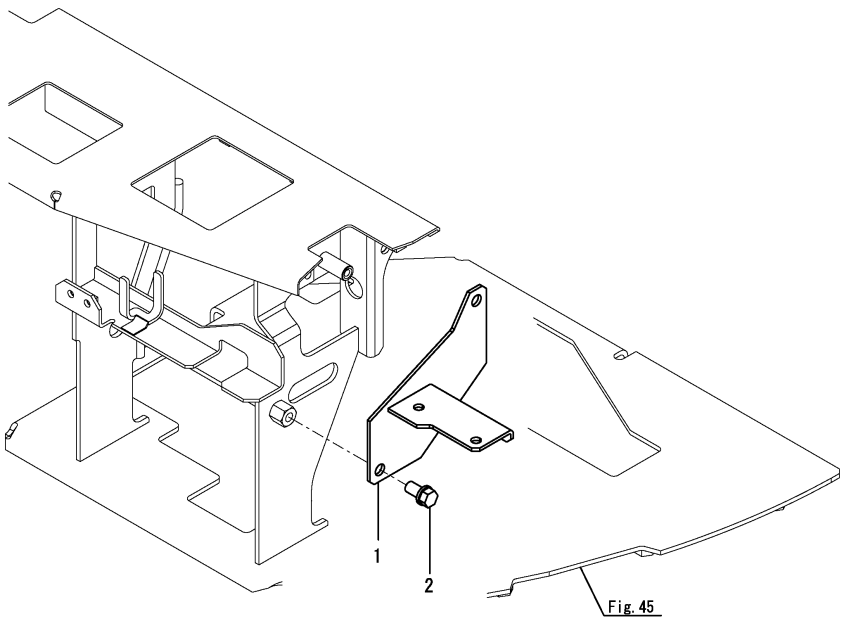

No.	Lev.	Parts No.	Description	Q'ty (A)	(B)	(C)	(D)	(E)	(F)	I	R
1	1	172B03-74460	BRACKET ASSY,PTO2	1	1						
2	1	26013-100202	BOLT, M10X 20	2	2						

Remarks
* Exclusive figure for angle blade specification.

N:Old $\xleftarrow[\text{No}]{\text{Yes}}$ New, Q:Old $\xleftarrow[\text{Yes}]{\text{No}}$ New, R:Old $\xleftarrow[\text{Yes}]{\text{Yes}}$ New, S:Old $\xleftarrow[\text{No}]{\text{No}}$ New, W:Add, Z:Discontinued, F:Interchangeable by set, K:Q'ty Change

Copyright (C) YANMAR CO., LTD. All RightsReserved.

Fig.107. HYD. OIL TANK

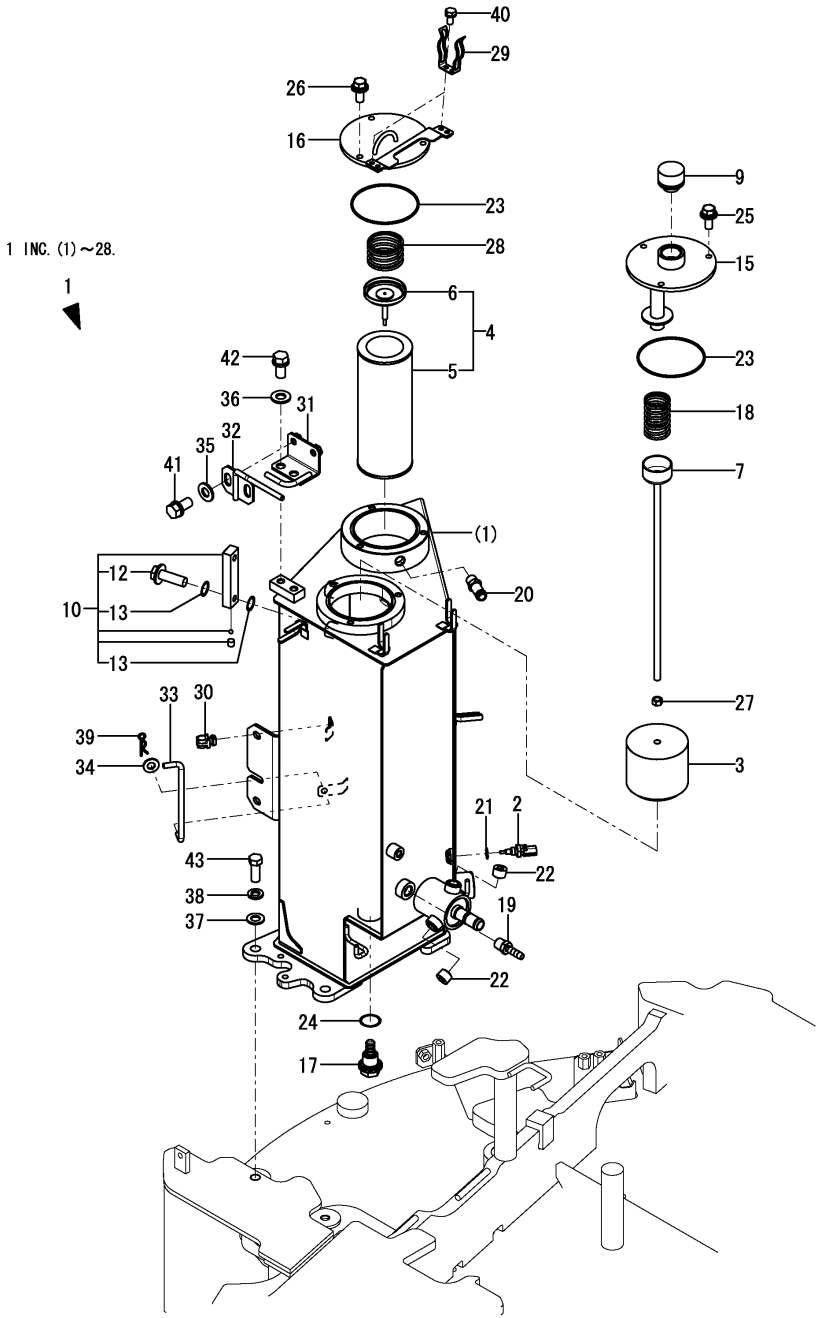

(A)=VIO35-6A P(US)
(B)=VIO35-6A C(US)
(C)=
(D)=
(E)=
(F)=

No.	Lev.	Parts No.	Description	Q'ty (A)	(B)	(C)	(D)	(E)	(F)	I	R
1	1	172B03-08380	RESERVOIR KIT	1	1						
2	2	129927-44900	SENSOR	1	1						
3	2	172137-73700	FILTER, SUCTION	1	1						
4	2	172175-73700	FILTER ASSY, RETURN	1	1						
5	3	172175-73710	ELEMENT, FILTER	1	1						
6	3	172141-73770	VALVE ASSY, BY-PASS	1	1						
7	2	172187-73711	ROD ASSY, FILTER	1	1						
9	2	172446-75250	CAP, RESERVER	1	1						
10	2	172455-75270	GAUGE ASSY, OIL	1	1						
12	3	172455-75290	BOLT	2	2						
13	3	172455-75300	O-RING	4	4						
15	2	172B03-75400	COVER ASSY	1	1						
16	2	172B03-75450	COVER ASSY	1	1						
17	2	172187-75500	PLUG	1	1						
18	2	172112-75780	SPRING, FILTER	1	1						
19	2	172137-76110	NIPPLE	1	1						
20	2	172637-76110	ADAPTER, DRAIN	1	1						
21	2	23414-120000	GASKET, 12X1.0	1	1						
21-1	1	22190-120002	WASHER, SEAL 12	1	1					N	
	(A=MXXXXX)										
22	2	23871-030000	PLUG, R03	2	2						
23	2	24321-001050	O-RING, 1AG105.0	2	2						
24	2	24341-000300	O-RING, 1AS30.0	1	1						
25	2	26014-080202	BOLT, M8X 20	3	3						
26	2	26014-080202	BOLT, M8X 20	3	3						
27	2	26716-100002	NUT, M10	1	1						
28	2	933152-02710	SPRING, CLUTCH	1	1						
29	1	172122-55061	BRACKET, PUMP	2	2						
30	1	1A7400-61250	HOLDER, ROD 8	1	1						
31	1	172B03-61850	LOCK ASSY,CV B KEY	1	1						
32	1	172B03-61870	CATCH ASSY, COVER	1	1						
33	1	172B03-65780	HOOK, BONNET R	1	1						
34	1	22137-080000	WASHER, 8	1	1						
35	1	22137-100000	WASHER, 10	2	2						
36	1	22137-100000	WASHER, 10	2	2						
37	1	22137-140000	WASHER, 14	3	3						
38	1	22217-140000	WASHER, SPRING 14	3	3						
39	1	22372-080000	PIN, SNAP 8	1	1						
40	1	26013-060122	BOLT, M6X 12	4	4						
41	1	26013-100202	BOLT, M10X 20	2	2						
42	1	26013-100202	BOLT, M10X 20	2	2						
43	1	26116-140352	BOLT, M14X 35 PLATED	3	3						

N:Old ◄Yes/No► New, Q:Old ◄No/Yes► New, R:Old ◄Yes/Yes► New, S:Old ◄No/No► New, W:Add, Z:Discontinued, F:Interchangeable by set, K:Q'ty Change

Copyright (C) YANMAR CO., LTD. All RightsReserved.

Fig.126. QUICK COUPLER(HITCH CYLINDER)

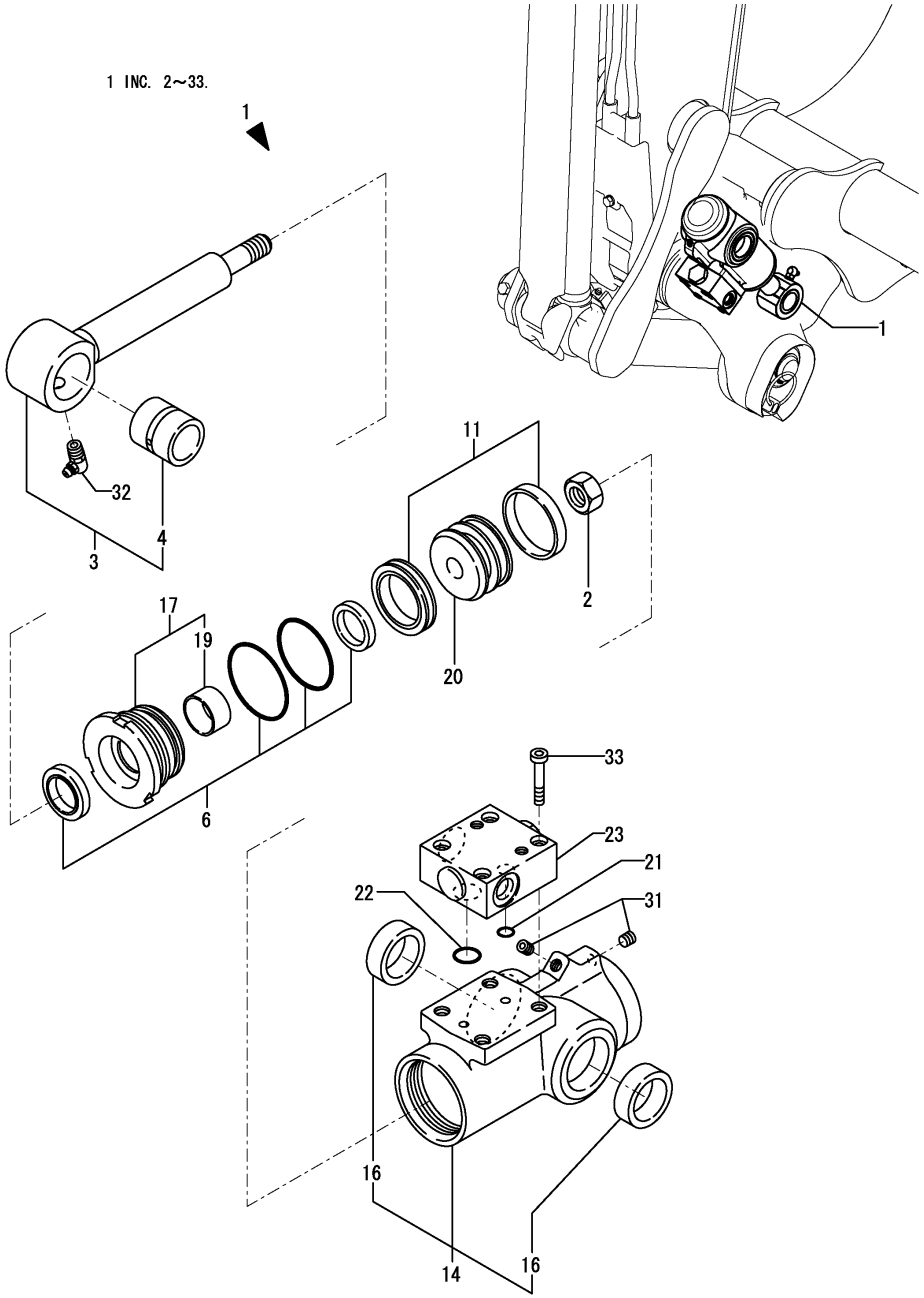

(A)=VIO35-6A P(US)
(B)=VIO35-6A C(US)
(C)=
(D)=
(E)=
(F)=

No.	Lev.	Parts No.	Description	Q'ty (A)	(B)	(C)	(D)	(E)	(F)	I	R
1	1	172958-72801-N	CYLINDER ASSY, HITCH	1	1						
2	2	172156-72400	NUT	1	1						
3	2	172958-72750	ROD ASSY, HITCH	1	1						
4	3	172156-72770	BUSH, PIN	1	1						
6	2	172958-72760	SEAL SET, HEAD	1	1						
11	2	172958-72770	SEAL SET, PISTON	1	1						
14	2	172958-72811-N	TUBE, HITCH	1	1						
16	3	172958-72970	BUSH	2	2						
17	2	172958-72860	HEAD ASSY	1	1						
19	3	24550-025150	BUSH, 25X15	1	1						
20	2	172958-72890	PISTON	1	1						
21	2	172958-72950	O-RING	1	1						
22	2	172958-72960	O-RING	1	1						
23	2	172958-72983-N	VALVE ASSY,OPERATE	1	1						
31	2	23871-005000	PLUG, R005	2	2						
32	2	24761-050000	NIPPLE, GREASE C	1	1						
33	2	26450-060302	BOLT, M6X 30	4	4						

N:Old $\xleftarrow[\text{No}]{\text{Yes}}$ New, Q:Old $\xleftarrow[\text{Yes}]{\text{No}}$ New, R:Old $\xleftarrow[\text{Yes}]{\text{Yes}}$ New, S:Old $\xleftarrow[\text{No}]{\text{No}}$ New, W:Add, Z:Discontinued, F:Interchangeable by set, K:Q'ty Change

Copyright (C) YANMAR CO., LTD. All RightsReserved.

Fig.108. TANK - PUMP & CONTROL VALVE

(A)=VIO35-6A P(US)
(B)=VIO35-6A C(US)
(C)=
(D)=
(E)=
(F)=

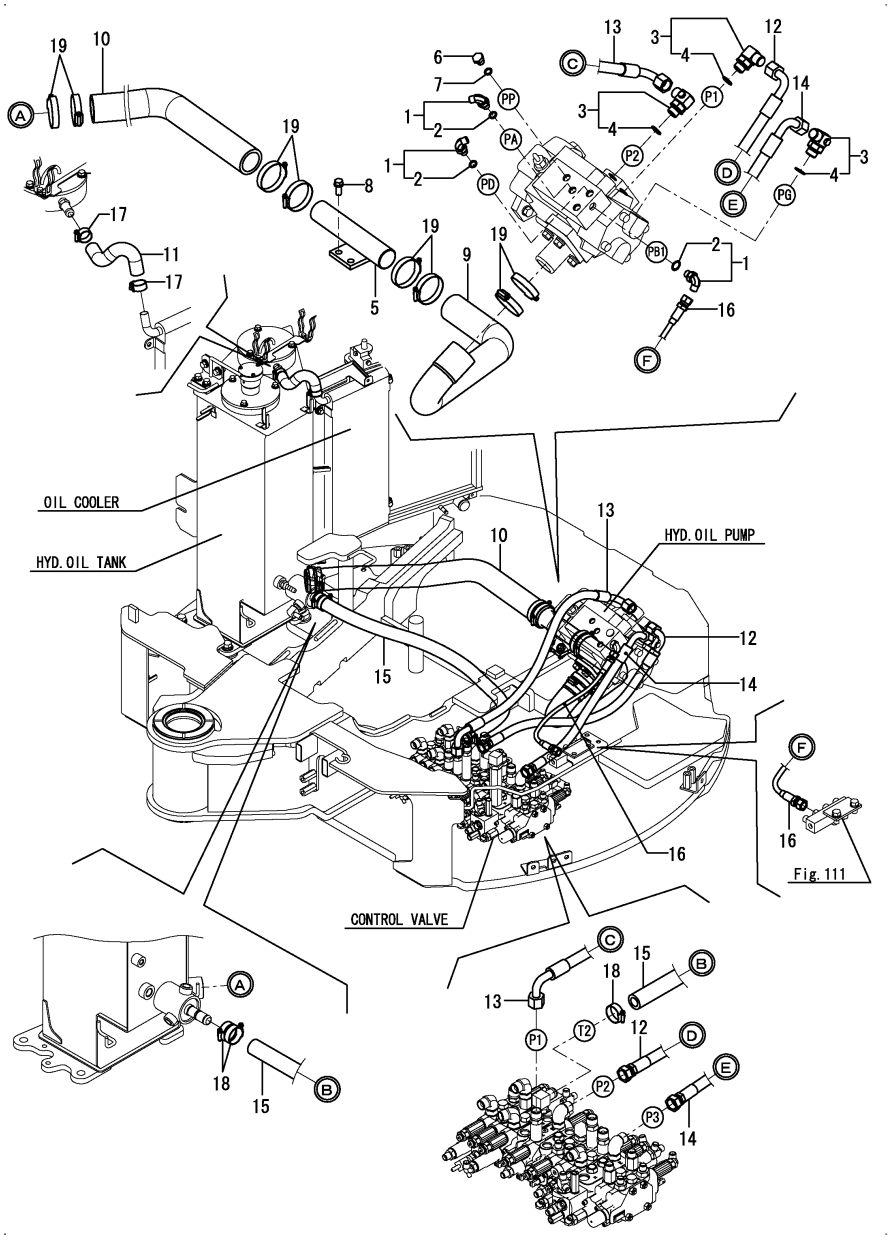

No.	Lev.	Parts No.	Description	Q'ty (A)	(B)	(C)	(D)	(E)	(F)	I	R
1	1	172B03-76010	ELBOW	3	3						
2	2	41851-000110	O-RING	3	3						
3	1	172A47-76151	ELBOW	3	3						
4	2	41851-000180	O-RING	3	3						
5	1	172444-76400	TUBE ASSY, SUCTION	1	1						
6	1	172165-76590	PLUG	1	1						
7	1	41851-000110	O-RING	1	1						
8	1	26013-100252	BOLT, M10X 25	2	2						
9	1	172B03-78100	HOSE,SUCTION A	1	1						
10	1	172B03-78110	HOSE,SUCTION B	1	1						
11	1	172B03-78120	HOSE,15.9X25.9	1	1						
12	1	172B03-78130	HOSE, H208BC057S	1	1						
13	1	172B03-78140	HOSE, H208CC063S	1	1						
14	1	172B03-78150	HOSE, H208BC047S	1	1						
15	1	172B03-78310	HOSE, G612YY090S	1	1						
16	1	172B03-78600	HOSE, F403BB042S	1	1						
17	1	23001-025000	CLAMP, HOSE 25	2	2						
18	1	23001-035000	CLAMP, HOSE 35	2	2						
18-1	1	23001-035000	CLAMP, HOSE 35	3	3					K	
	(A=MXXXXX)	(B=MXXXXX)									
19	1	23001-060000	CLAMP, HOSE 60	8	8						

Remarks
* Standard blade specification : Fitting(control valve) is shown in Fig.110 & 111.
* Angle blade specification : Fitting(control valve) is shown in Fig.177 & 178.

N:Old ◄Yes/No► New, Q:Old ◄No/Yes► New, R:Old ◄Yes/Yes► New, S:Old ◄No/No► New, W:Add, Z:Discontinued, F:Interchangeable by set, K:Q'ty Change

Copyright (C) YANMAR CO., LTD. All RightsReserved.

Fig.109. CONTROL VALVE - TURNING MOTOR

(A)=VIO35-6A P(US)
(B)=VIO35-6A C(US)
(C)=
(D)=
(E)=
(F)=

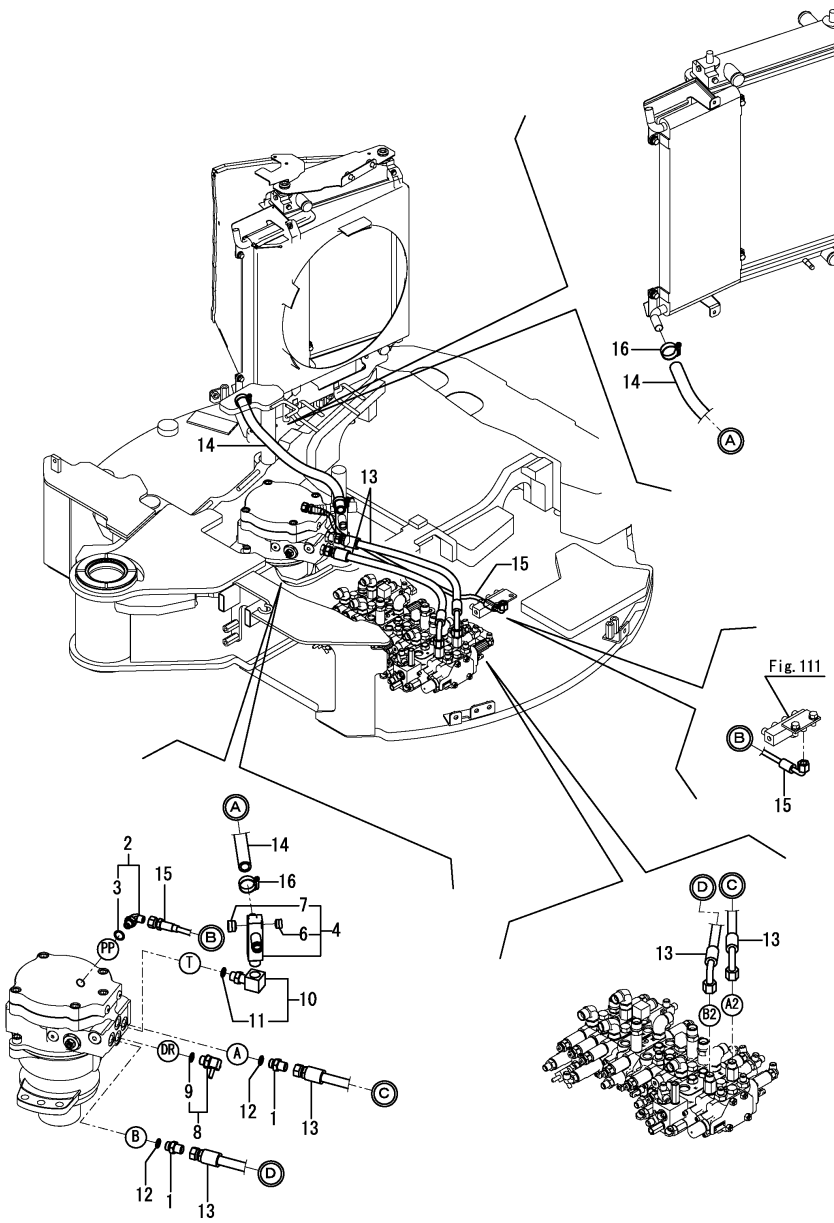

No.	Lev.	Parts No.	Description	Q'ty (A)	(B)	(C)	(D)	(E)	(F)	I	R
1	1	172730-75141	ADAPTER	2	2						
2	1	172B03-76010	ELBOW	1	1						
3	2	41851-000110	O-RING	1	1						
4	1	172B03-76090	CONNECTOR ASSY,TR1/2	1	1						
6	2	23871-030000	PLUG, R03	1	1						
7	2	23871-040000	PLUG, R04	1	1						
8	1	172A52-76110	NIPPLE, TEE	1	1						
9	2	24315-000140	O-RING, 1BP14.0	1	1						
10	1	172458-76160	ELBOW	1	1						
11	2	24315-000140	O-RING, 1BP14.0	1	1						
12	1	41851-000140	O-RING	2	2						
13	1	172B03-78260	HOSE, F206BC052	2	2						
14	1	172B03-78510	HOSE, G610YY057S	1	1						
15	1	172B03-78610	HOSE, F403BC070S	1	1						
16	1	23001-035000	CLAMP, HOSE 35	2	2						

Remarks
* Standard blade specification : Fitting(control valve) is shown in Fig.110 & 111.
* Angle blade specification : Fitting(control valve) is shown in Fig.177 & 178.

N:Old $\frac{\text{Yes}}{\text{No}}$ New, Q:Old $\frac{\text{No}}{\text{Yes}}$ New, R:Old $\frac{\text{Yes}}{\text{Yes}}$ New, S:Old $\frac{\text{No}}{\text{No}}$ New, W:Add, Z:Discontinued, F:Interchangeable by set, K:Q'ty Change

Copyright (C) YANMAR CO., LTD. All RightsReserved.

Fig.110. CONTROL VALVE(FITTING)(1)

(A)=VIO35-6A P(US)
(B)=VIO35-6A C(US)
(C)=
(D)=
(E)=
(F)=

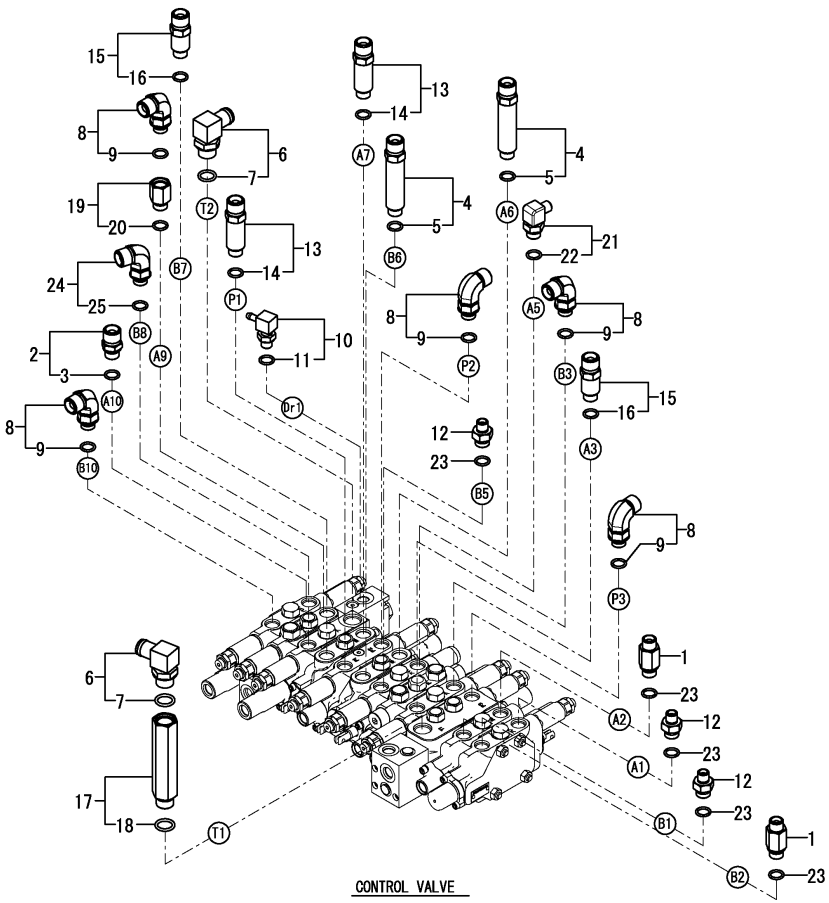

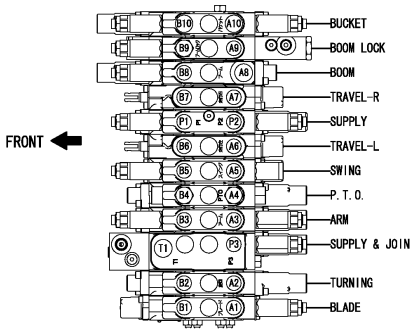

No.	Lev.	Parts No.	Description	Q'ty (A)	(B)	(C)	(D)	(E)	(F)	I	R
1	1	172B03-76070	CONNECTOR, G3/8X3/8	2	2						
2	1	172B03-76110	CONNECTOR, G1/2X3/8	1	1						
3	2	41851-000140	O-RING	1	1						
4	1	172B03-76120	CONNECTOR, G1/2X3/8L	2	2						
5	2	41851-000140	O-RING	2	2						
6	1	172164-76131	ELBOW	2	2						
7	2	24315-000180	O-RING, 1BP18.0	2	2						
8	1	172B03-76130	ELBOW	5	5						
9	2	41851-000140	O-RING	5	5						
10	1	172458-76150	NIPPLE, ELBOW	1	1						
11	2	24315-000110	O-RING, 1BP11.0	1	1						
12	1	172124-76160	CONNECTOR	3	3						
13	1	172B03-76160	CONNECTOR, G1/2X3/8M	2	2						
14	2	41851-000140	O-RING	2	2						
15	1	172B03-76170	CONNECTOR, G1/2X3/8S	2	2						
16	2	41851-000140	O-RING	2	2						
17	1	172B03-76190	ADAPTER	1	1						
18	2	41851-000180	O-RING	1	1						
19	1	172B03-76630	ADAPTER	1	1						
20	2	41851-000140	O-RING	1	1						
21	1	172141-76920	CONNECTOR ASSY	1	1						
22	2	24315-000140	O-RING, 1BP14.0	1	1						
23	1	41851-000140	O-RING	5	5						
24	1	172B03-76130	ELBOW	1	1						
25	2	41851-000140	O-RING	1	1						

Remarks
* Not applied for angle blade specification.

N:Old ←Yes/No→ New, Q:Old ←No/Yes→ New, R:Old ←Yes/Yes→ New, S:Old ←No/No→ New, W:Add, Z:Discontinued, F:Interchangeable by set, K:Q'ty Change

Copyright (C) YANMAR CO., LTD. All RightsReserved.

Fig.177. (110A)CONTROL VALVE(FITTING)(1)(ANGLE BLADE SPEC.)

(A)=VIO35-6A P(US)
(B)=VIO35-6A C(US)
(C)=
(D)=
(E)=
(F)=

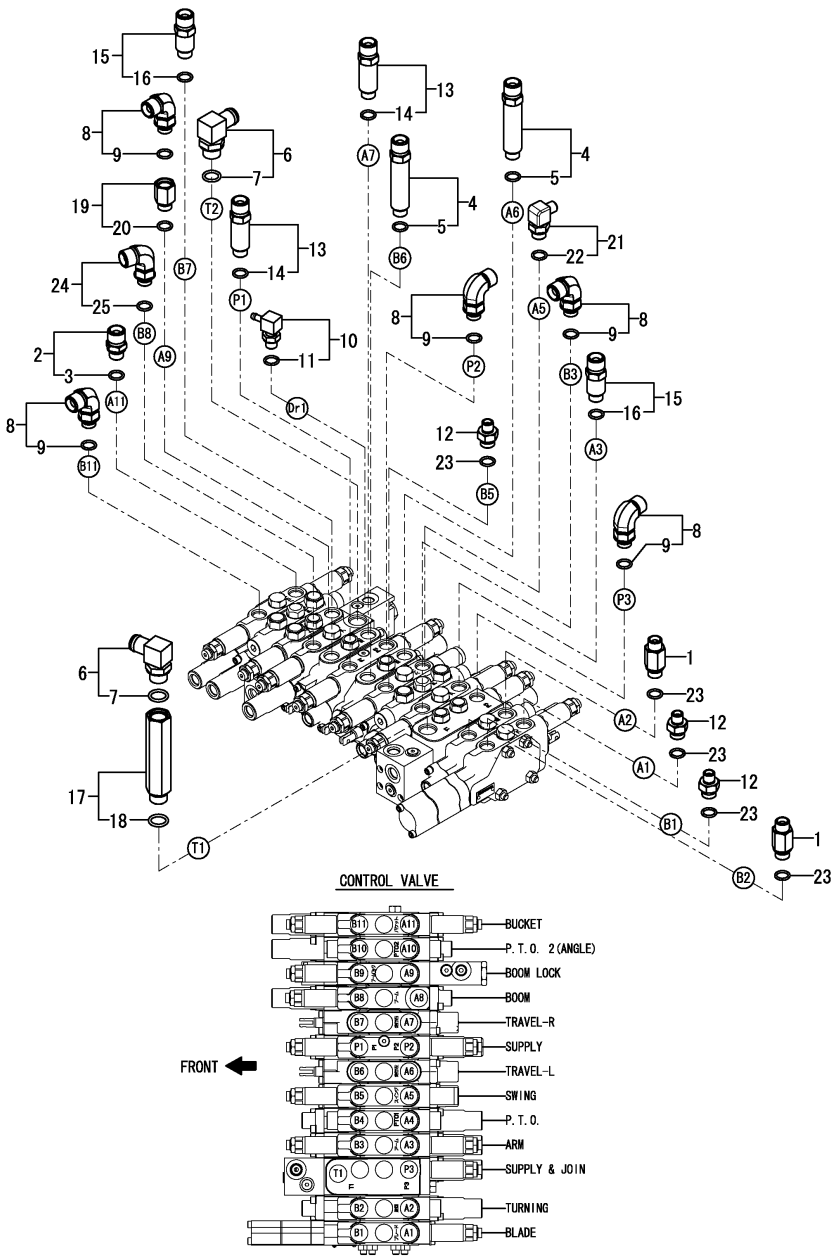

No.	Lev.	Parts No.	Description	Q'ty (A)	(B)	(C)	(D)	(E)	(F)	I	R
1	1	172B03-76070	CONNECTOR, G3/8X3/8	2	2						
2	1	172B03-76110	CONNECTOR, G1/2X3/8	1	1						
3	2	41851-000140	O-RING	1	1						
4	1	172B03-76120	CONNECTOR, G1/2X3/8L	2	2						
5	2	41851-000140	O-RING	2	2						
6	1	172164-76131	ELBOW	2	2						
7	2	24315-000180	O-RING, 1BP18.0	2	2						
8	1	172B03-76130	ELBOW	5	5						
9	2	41851-000140	O-RING	5	5						
10	1	172458-76150	NIPPLE, ELBOW	1	1						
11	2	24315-000110	O-RING, 1BP11.0	1	1						
12	1	172124-76160	CONNECTOR	3	3						
13	1	172B03-76160	CONNECTOR, G1/2X3/8M	2	2						
14	2	41851-000140	O-RING	2	2						
15	1	172B03-76170	CONNECTOR, G1/2X3/8S	2	2						
16	2	41851-000140	O-RING	2	2						
17	1	172B03-76190	ADAPTER	1	1						
18	2	41851-000180	O-RING	1	1						
19	1	172B03-76630	ADAPTER	1	1						
20	2	41851-000140	O-RING	1	1						
21	1	172141-76920	CONNECTOR ASSY	1	1						
22	2	24315-000140	O-RING, 1BP14.0	1	1						
23	1	41851-000140	O-RING	5	5						
24	1	172B03-76130	ELBOW	1	1						
25	2	41851-000140	O-RING	1	1						

Remarks
* Exclusive figure for angle blade specification.

N:Old $\xleftarrow[\text{No}]{\text{Yes}}$ New, Q:Old $\xleftarrow[\text{Yes}]{\text{No}}$ New, R:Old $\xleftarrow[\text{Yes}]{\text{Yes}}$ New, S:Old $\xleftarrow[\text{No}]{\text{No}}$ New, W:Add, Z:Discontinued, F:Interchangeable by set, K:Q'ty Change

Copyright (C) YANMAR CO., LTD. All RightsReserved.

Fig.111. CONTROL VALVE(FITTING)(2)

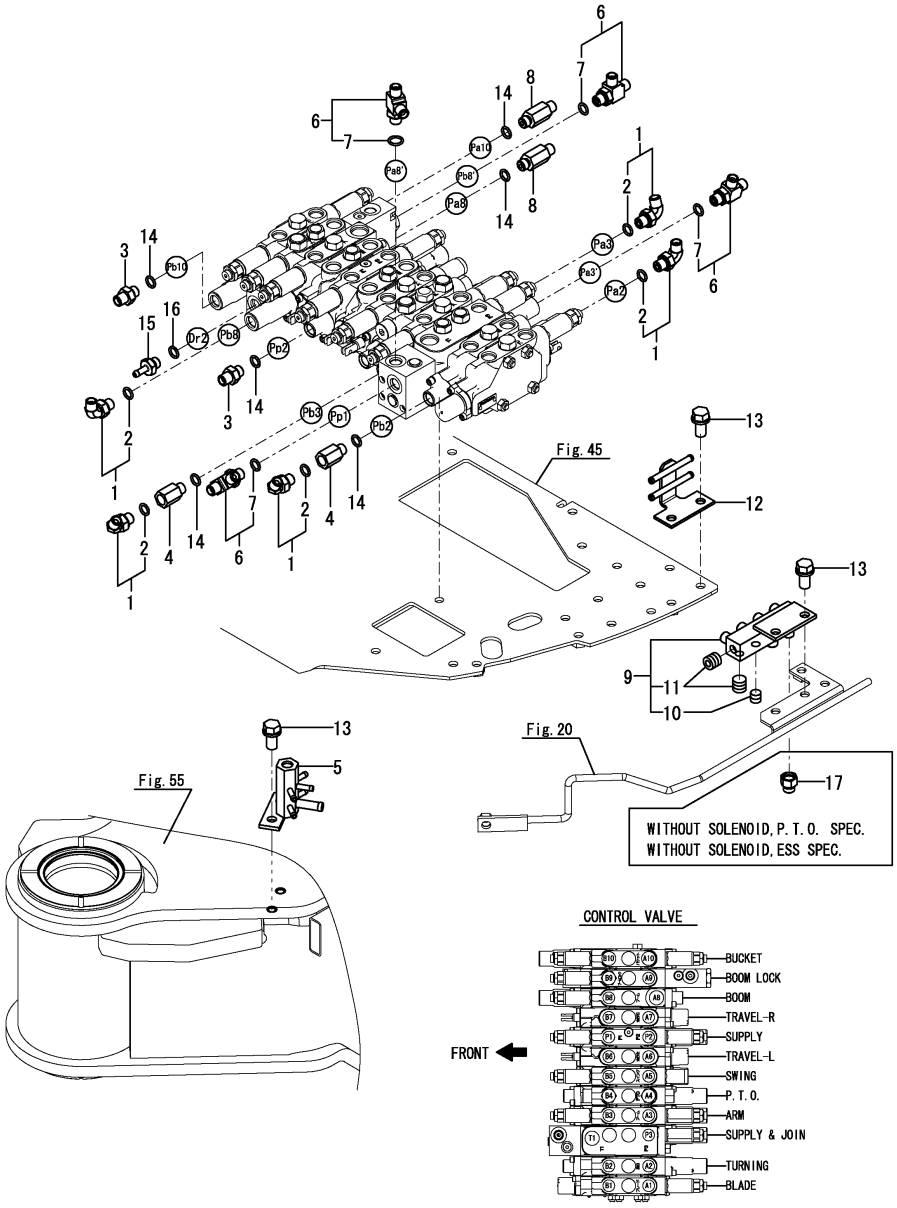

(A)=VIO35-6A P(US) (D)=
(B)=VIO35-6A C(US) (E)=
(C)= (F)=

No.	Lev.	Parts No.	Description	Q'ty (A)	(B)	(C)	(D)	(E)	(F)	I	R
1	1	172B03-76010	ELBOW	5	5						
2	2	41851-000110	O-RING	5	5						
3	1	172123-76121	ADAPTER	2	2						
4	1	172422-76140	CONNECTOR	2	2						
5	1	172445-76153	BLOCK, DRAIN	1	1						
6	1	172162-76181	JOINT ASSY	4	4						
7	2	41851-000110	O-RING	4	4						
8	1	172183-76200	CONNECTOR	2	2						
9	1	172A47-76310	BLOCK, PILOT	1	1						
10	2	23871-010000	PLUG, R01	1	1						
11	2	23871-020000	PLUG, R02	2	2						
12	1	172B03-76310	CONNECTOR ASSY	1	1						
13	1	26013-100202	BOLT, M10X 20	6	6						
14	1	41851-000110	O-RING	6	6						
15	1	172B03-76080	NIPPLE, G1/4	1	1						
16	1	41851-000110	O-RING	1	1						
17	1	1E3030-78370	CAP, SCREW	1	1					W	
	(A=MXXXXX)	(B=MXXXXX)									

Remarks
* Not applied for angle blade specification.

N:Old $\xleftarrow[\text{No}]{\text{Yes}}$ New, Q:Old $\xleftarrow[\text{Yes}]{\text{No}}$ New, R:Old $\xleftarrow[\text{Yes}]{\text{Yes}}$ New, S:Old $\xleftarrow[\text{No}]{\text{No}}$ New, W:Add, Z:Discontinued, F:Interchangeable by set, K:Q'ty Change

Copyright (C) YANMAR CO., LTD. All RightsReserved.

Fig.178. (111A)CONTROL VALVE(FITTING)(2)(ANGLE BLADE SPEC.)

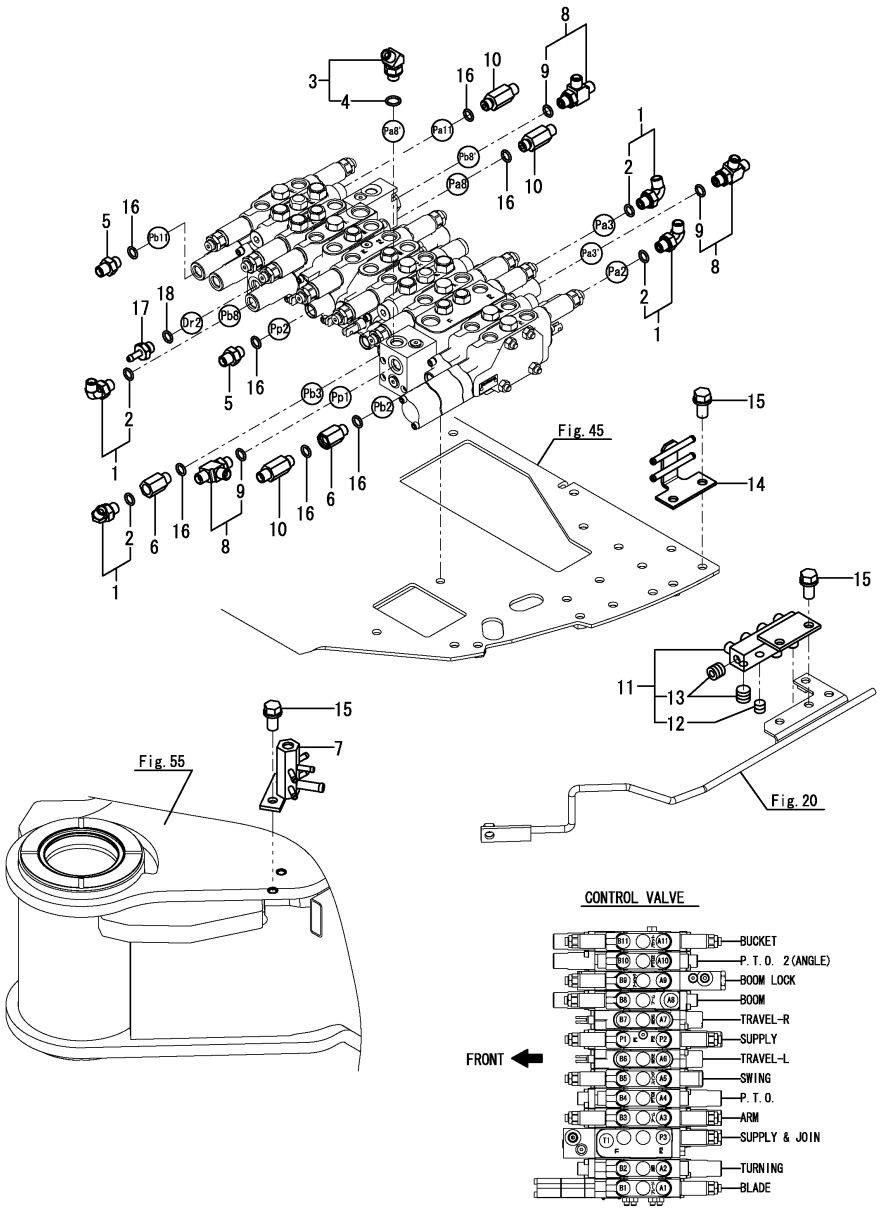

(A)=VIO35-6A P(US)
(B)=VIO35-6A C(US)
(C)=
(D)=
(E)=
(F)=

No.	Lev.	Parts No.	Description	Q'ty (A)	(B)	(C)	(D)	(E)	(F)	I	R
1	1	172B03-76010	ELBOW	4	4						
2	2	41851-000110	O-RING	4	4						
3	1	172173-76102	CONNECTOR ASSY	1	1						
4	2	41851-000110	O-RING	1	1						
5	1	172123-76121	ADAPTER	2	2						
6	1	172422-76140	CONNECTOR	2	2						
7	1	172445-76153	BLOCK, DRAIN	1	1						
8	1	172162-76181	JOINT ASSY	3	3						
9	2	41851-000110	O-RING	3	3						
10	1	172183-76200	CONNECTOR	3	3						
11	1	172A47-76310	BLOCK, PILOT	1	1						
12	2	23871-010000	PLUG, R01	1	1						
13	2	23871-020000	PLUG, R02	2	2						
14	1	172B03-76310	CONNECTOR ASSY	1	1						
15	1	26013-100202	BOLT, M10X 20	6	6						
16	1	41851-000110	O-RING	7	7						
17	1	172B03-76080	NIPPLE, G1/4	1	1						
18	1	41851-000110	O-RING	1	1						

Remarks
* Exclusive figure for angle blade specification.

N:Old $\frac{\text{Yes}}{\text{No}}$ New, Q:Old $\frac{\text{No}}{\text{Yes}}$ New, R:Old $\frac{\text{Yes}}{\text{Yes}}$ New, S:Old $\frac{\text{No}}{\text{No}}$ New, W:Add, Z:Discontinued, F:Interchangeable by set, K:Q'ty Change

Copyright (C) YANMAR CO., LTD. All RightsReserved.

Fig.112. CONTROL VALVE - RETURN & DRAIN

(A)=VIO35-6A P(US)
(B)=VIO35-6A C(US)
(C)=
(D)=
(E)=
(F)=

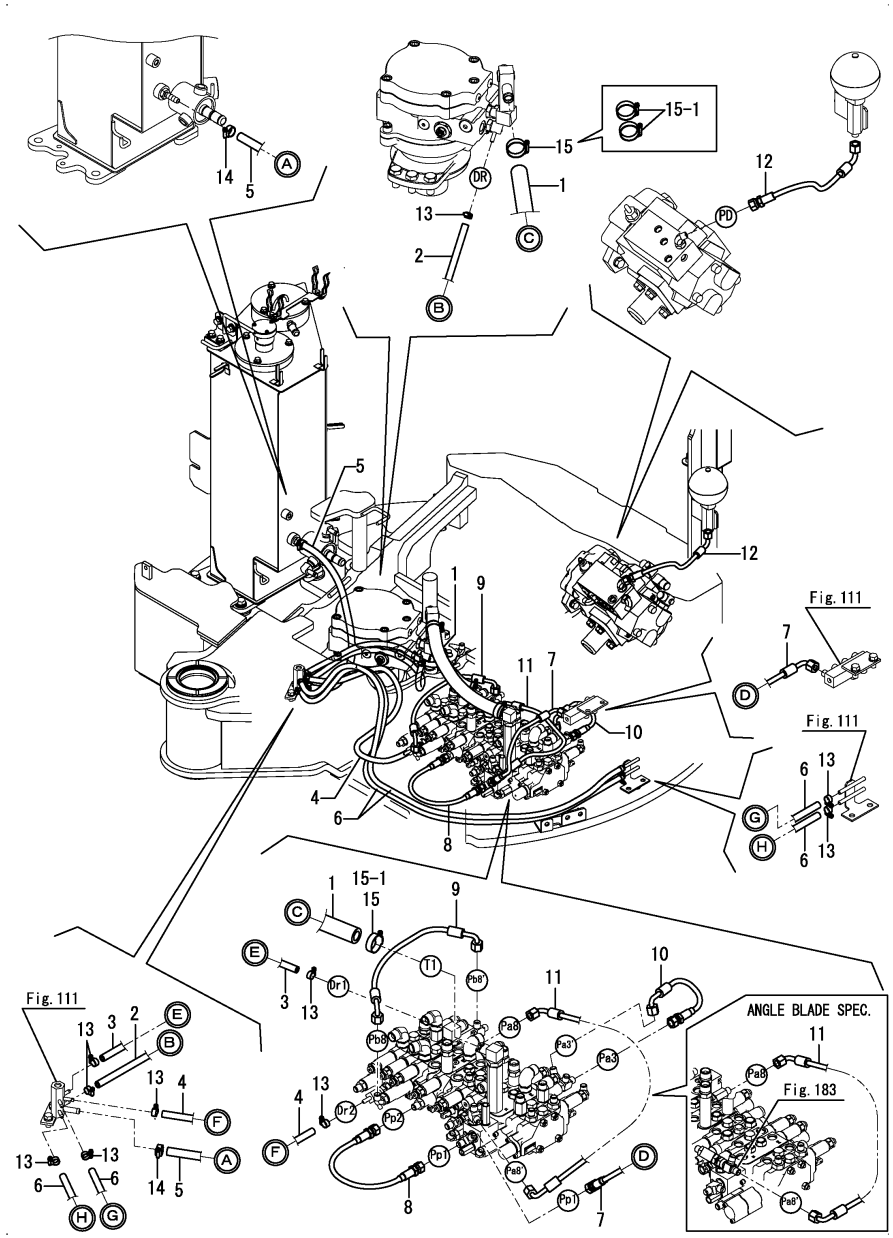

No.	Lev.	Parts No.	Description	Q'ty (A)	(B)	(C)	(D)	(E)	(F)	I	R
1	1	172B03-78300	HOSE, G612YY045	1	1						
2	1	172B03-78530	HOSE, G804YY061S	1	1						
3	1	172B03-78540	HOSE, G804YY058S	1	1						
4	1	172B03-78550	HOSE, G804YY071S	1	1						
5	1	172B03-78560	HOSE, G806YY060S	1	1						
6	1	172B03-78570	HOSE, G804YY135S	2	2						
7	1	172B03-78620	HOSE, F403BC032S	1	1						
8	1	172B03-78640	HOSE, F403BB041S	1	1						
9	1	172B03-78650	HOSE, F403CC040S	1	1						
10	1	172B03-78700	HOSE, F403BC023S	1	1						
11	1	172B03-78720	HOSE, F403CC056	1	1						
12	1	172B03-78760	HOSE, F403BC035	1	1						
13	1	23000-013000	CLAMP, 13	10	10						
14	1	23001-019000	CLAMP, HOSE 19	2	2						
15	1	23001-035000	CLAMP, HOSE 35	2	2						
15-1	1	23001-035000	CLAMP, HOSE 35	3	3					K	
	(A=*2014.02.)		(B=*2014.02.)								

Remarks
* Standard blade specification : Fitting(control valve) is shown in Fig.110 & 111.
* Angle blade specification : Fitting(control valve) is shown in Fig.177 & 178.

N:Old ◄Yes/No► New, Q:Old ◄No/Yes► New, R:Old ◄Yes/Yes► New, S:Old ◄No/No► New, W:Add, Z:Discontinued, F:Interchangeable by set, K:Q'ty Change

Copyright (C) YANMAR CO., LTD. All RightsReserved.

Fig.113. CONTROL VALVE - BOOM BULKHEAD & SWING

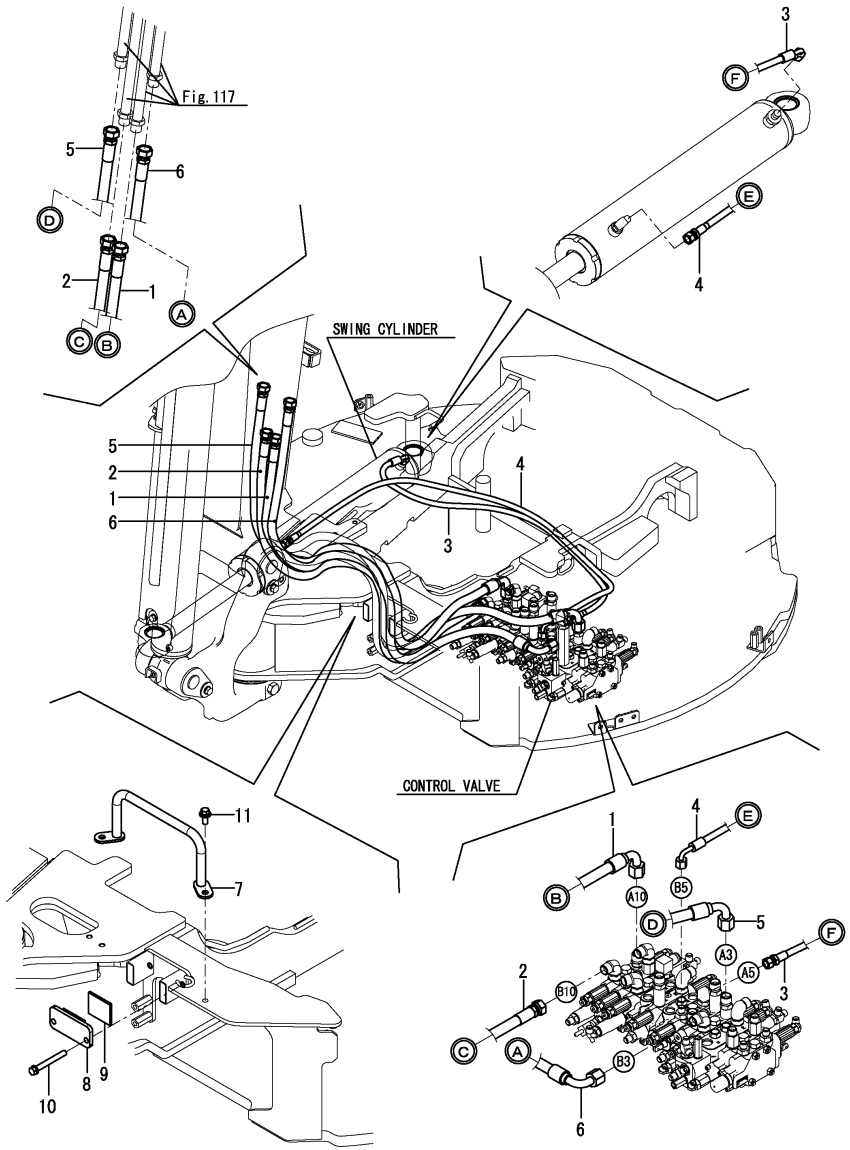

(A)=VIO35-6A P(US)
(B)=VIO35-6A C(US)
(C)=
(D)=
(E)=
(F)=

No.	Lev.	Parts No.	Description	Q'ty (A)	(B)	(C)	(D)	(E)	(F)	I	R
1	1	172B03-78160	HOSE, H208BC135K	1	1						
2	1	172B03-78170	HOSE, H208BB130K	1	1						
3	1	172B03-78220	HOSE, F204BC105S	1	1						
4	1	172B03-78230	HOSE, F204BC137S	1	1						
5	1	172B03-78240	HOSE, H208BC158K	1	1						
6	1	172B03-78250	HOSE, H208BC155K	1	1						
7	1	172B03-79720	GUIDE ASSY, HOSE	1	1						
8	1	172B03-79950	PLATE ASSY, HOSE	1	1						
9	1	172B03-79970	CLAMP, HOSE	1	1						
10	1	26013-100852	BOLT, M10X 85	2	2						
11	1	26014-100252	BOLT, M10X 25	2	2						

Remarks
* Standard blade specification : Fitting(control valve) is shown in Fig.110 & 111.
* Angle blade specification : Fitting(control valve) is shown in Fig.177 & 178.

N:Old ◄Yes/No► New, Q:Old ◄No/Yes► New, R:Old ◄Yes/Yes► New, S:Old ◄No/No► New, W:Add, Z:Discontinued, F:Interchangeable by set, K:Q'ty Change

Copyright (C) YANMAR CO., LTD. All RightsReserved.

Fig.114. CONTROL VALVE - BOOM CYLINDER

(A)=VIO35-6A P(US) (D)=
(B)=VIO35-6A C(US) (E)=
(C)= (F)=

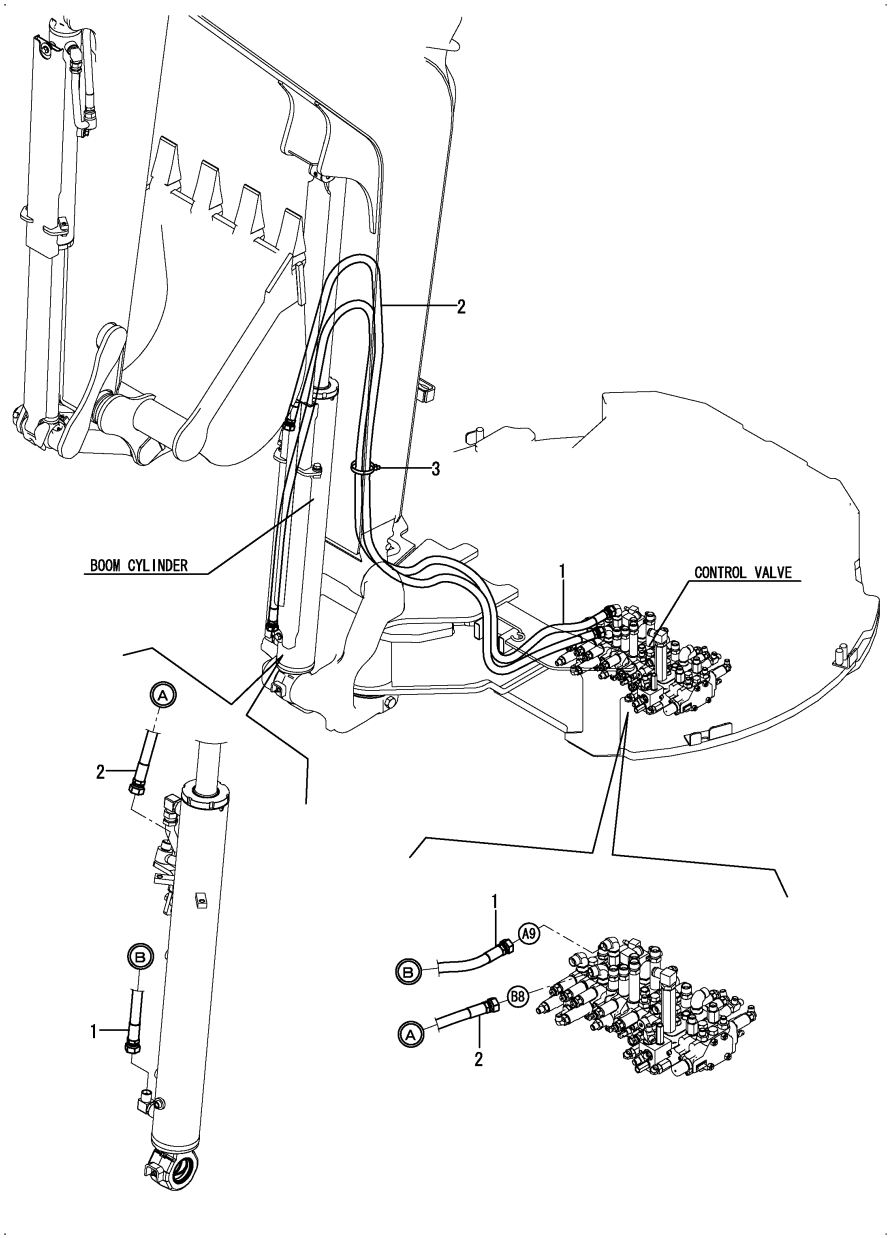

No.	Lev.	Parts No.	Description	Q'ty (A)	(B)	(C)	(D)	(E)	(F)	I	R
1	1	172B03-78180	HOSE, H208BB291K	1	1						
2	1	172B03-78190	HOSE, H208BB251K	1	1						
3	1	172122-79890	CLAMP, HOSE	1	1					W	

(A=MZZZZZ) (B=MZZZZZ)

Remarks
* Standard blade specification : Fitting(control valve) is shown in Fig.110 & 111.
* Angle blade specification : Fitting(control valve) is shown in Fig.177 & 178.

N:Old $\xleftarrow[\text{No}]{\text{Yes}}$ New, Q:Old $\xleftarrow[\text{Yes}]{\text{No}}$ New, R:Old $\xleftarrow[\text{Yes}]{\text{Yes}}$ New, S:Old $\xleftarrow[\text{No}]{\text{No}}$ New, W:Add, Z:Discontinued, F:Interchangeable by set, K:Q'ty Change

Copyright (C) YANMAR CO., LTD. All RightsReserved.

Fig.115. CONTROL VALVE - SWIVEL JOINT

(A)=VIO35-6A P(US)
(B)=VIO35-6A C(US)
(C)=
(D)=
(E)=
(F)=

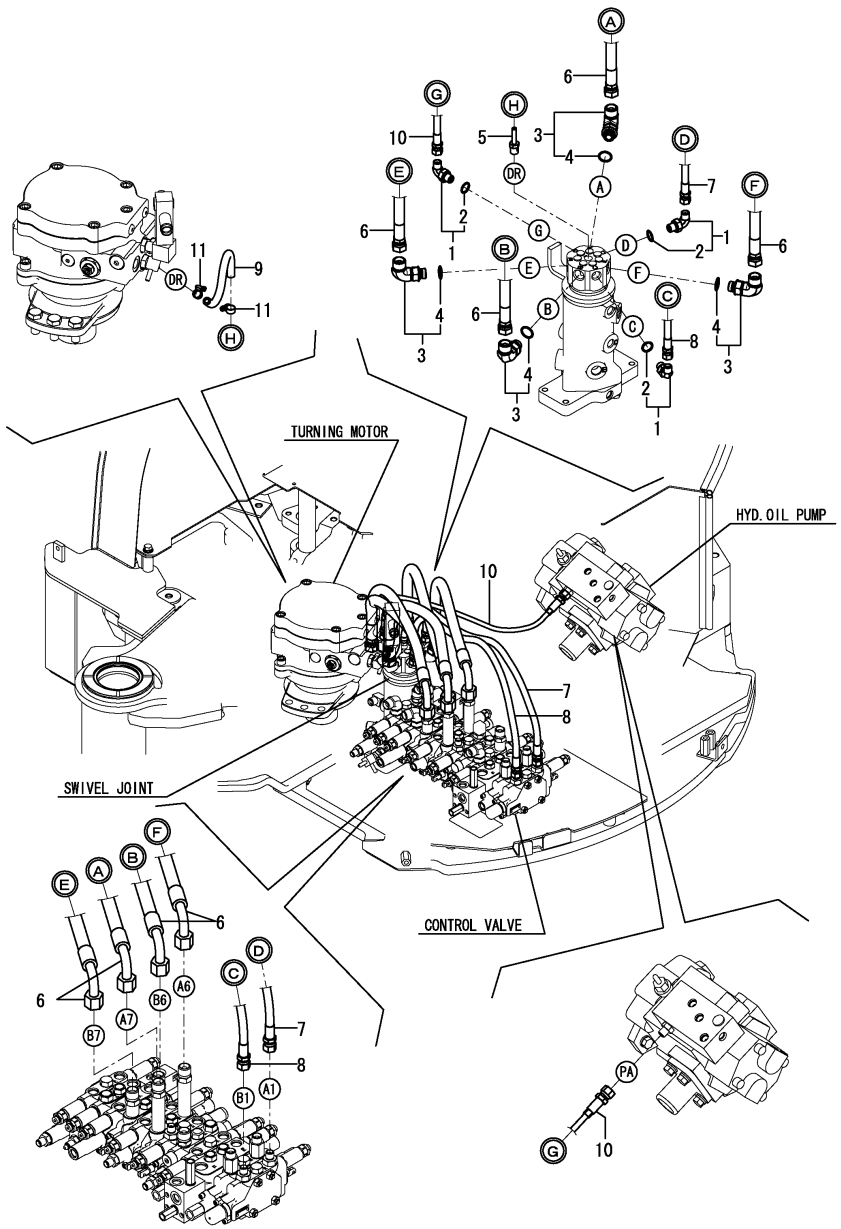

No.	Lev.	Parts No.	Description	Q'ty (A)	(B)	(C)	(D)	(E)	(F)	I	R
1	1	172B03-76010	ELBOW	3	3						
2	2	41851-000110	O-RING	3	3						
3	1	172B03-76130	ELBOW	4	4						
4	2	41851-000140	O-RING	4	4						
5	1	172141-76220	NIPPLE, 02	1	1						
6	1	172B03-78200	HOSE, F208BC059S	4	4						
7	1	172B03-78280	HOSE, F204BB085S	1	1						
8	1	172B03-78290	HOSE, F204BB082S	1	1						
9	1	172B03-78520	HOSE, G804YY022S	1	1						
10	1	172B03-78630	HOSE, F403BB070S	1	1						
11	1	23000-013000	CLAMP, 13	2	2						

Remarks
* Not applied for angle blade specification.
* Fitting(control valve) is shown in Fig.110 & 111.

N:Old ◄Yes/No► New, Q:Old ◄No/Yes► New, R:Old ◄Yes/Yes► New, S:Old ◄No/No► New, W:Add, Z:Discontinued, F:Interchangeable by set, K:Q'ty Change

Copyright (C) YANMAR CO., LTD. All RightsReserved.

Fig.179. (115A)CONTROL VALVE - SWIVEL JOINT(ANGLE BLADE SPEC.)

(A)=VIO35-6A P(US)
(B)=VIO35-6A C(US)
(C)=
(D)=
(E)=
(F)=

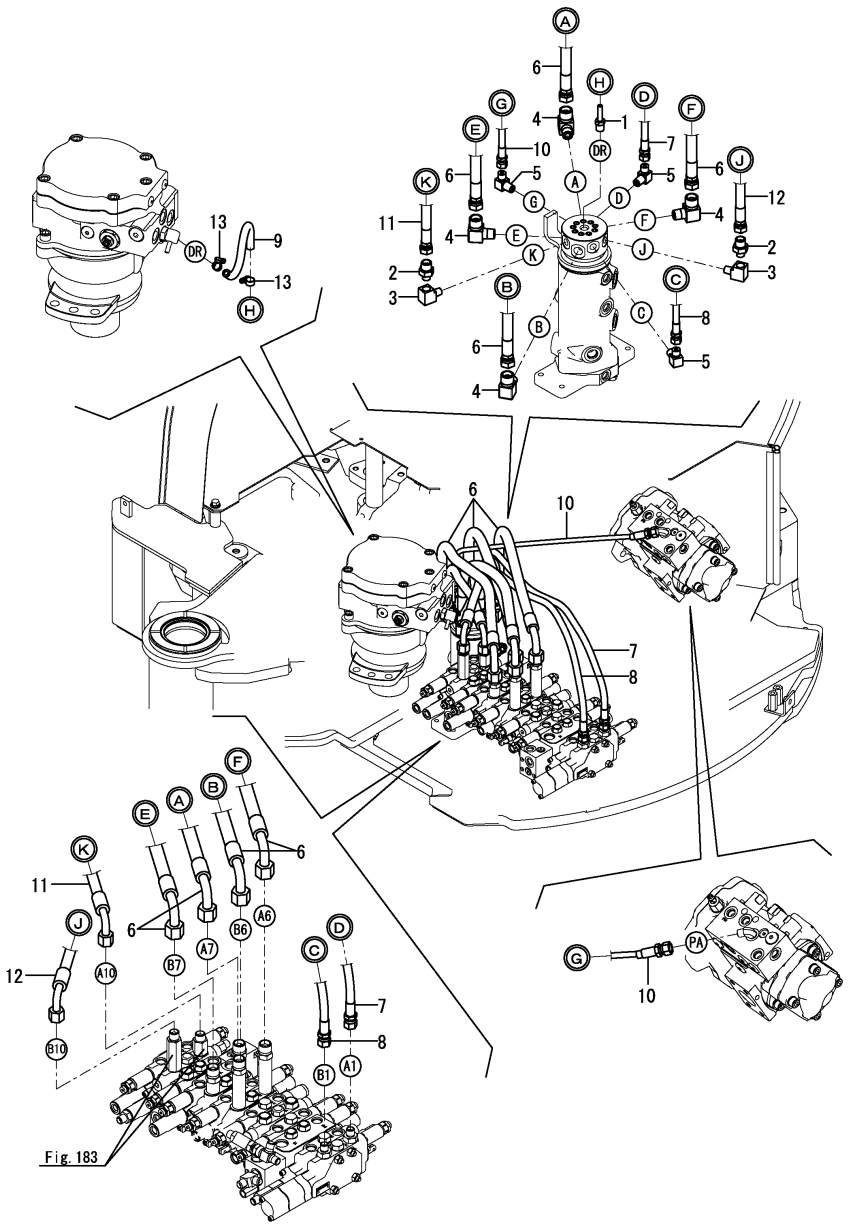

No.	Lev.	Parts No.	Description	Q'ty (A)	(B)	(C)	(D)	(E)	(F)	I	R
1	1	172141-76220	NIPPLE, 02	1	1						
2	1	172312-76240	NIPPLE, 1/4-3/8	2	2						
3	1	172312-76250	ELBOW	2	2						
4	1	172141-76990	ELBOW	4	4						
5	1	23393-020000	JOINT, 90RGI-1/4	3	3						
6	1	172B03-78200	HOSE, F208BC059S	4	4						
7	1	172B03-78280	HOSE, F204BB085S	1	1						
8	1	172B03-78290	HOSE, F204BB082S	1	1						
9	1	172B03-78520	HOSE, G804YY022S	1	1						
10	1	172B03-78630	HOSE, F403BB070S	1	1						
11	1	172B03-79060	HOSE, F206BC038S	1	1						
12	1	172B03-79070	HOSE, F206BC043S	1	1						
13	1	23000-013000	CLAMP, 13	2	2						

Remarks
* Exclusive figure for angle blade specification.
* Fitting(control valve) is shown in Fig.177 & 178.

N:Old $\overset{\text{Yes}}{\underset{\text{No}}{\leftrightarrows}}$ New, Q:Old $\overset{\text{No}}{\underset{\text{Yes}}{\leftrightarrows}}$ New, R:Old $\overset{\text{Yes}}{\underset{\text{Yes}}{\leftrightarrows}}$ New, S:Old $\overset{\text{No}}{\underset{\text{No}}{\leftrightarrows}}$ New, W:Add, Z:Discontinued, F:Interchangeable by set, K:Q'ty Change

Copyright (C) YANMAR CO., LTD. All RightsReserved.

Fig.116. TRACK FRAME

(A)=VIO35-6A P(US)
(B)=VIO35-6A C(US)
(C)=
(D)=
(E)=
(F)=

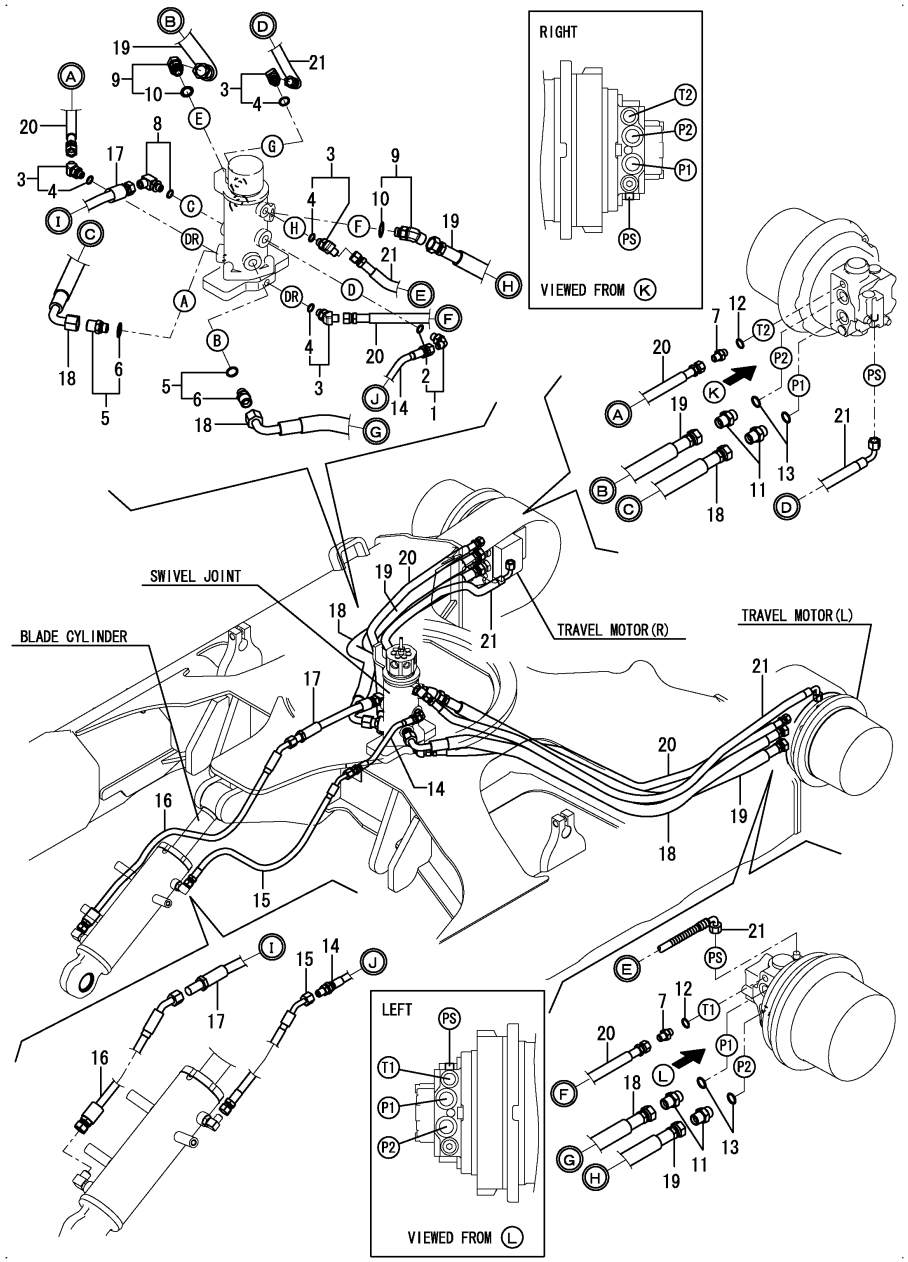

No.	Lev.	Parts No.	Description	Q'ty (A)	(B)	(C)	(D)	(E)	(F)	I	R
1	1	172B03-76010	ELBOW	1	1						
2	2	41851-000110	O-RING	1	1						
3	1	172173-76102	CONNECTOR ASSY	4	4						
4	2	41851-000110	O-RING	4	4						
5	1	172B03-76110	CONNECTOR, G1/2X3/8	2	2						
6	2	41851-000140	O-RING	2	2						
7	1	172123-76121	ADAPTER	2	2						
8	1	172173-76121	CONNECTOR ASSY	1	1						
9	1	172B03-76150	ELBOW	2	2						
10	2	41851-000140	O-RING	2	2						
11	1	172112-77361	CONNECTOR	4	4						
12	1	41851-000110	O-RING	2	2						
13	1	41851-000180	O-RING	4	4						
14	1	172B03-78320	HOSE, H204BX027	1	1						
15	1	172B03-78330	HOSE, F204BE063W	1	1						
16	1	172B03-78340	HOSE, F206BE087W	1	1						
17	1	172B03-78350	HOSE, H206BX027	1	1						
18	1	172B03-78360	HOSE, F208BC106W	2	2						
19	1	172B03-78370	HOSE, H208BB103W	2	2						
20	1	172B03-78380	HOSE, F204BB105W	2	2						
21	1	172B03-78390	HOSE, F204BC116W	2	2						

Remarks
* Not applied for angle blade specification.

N:Old $\xleftarrow[\text{No}]{\text{Yes}}$ New, Q:Old $\xleftarrow[\text{Yes}]{\text{No}}$ New, R:Old $\xleftarrow[\text{Yes}]{\text{Yes}}$ New, S:Old $\xleftarrow[\text{No}]{\text{No}}$ New, W:Add, Z:Discontinued, F:Interchangeable by set, K:Q'ty Change

Copyright (C) YANMAR CO., LTD. All RightsReserved.

Fig.180. (116A)TRACK FRAME(ANGLE BLADE SPEC.)

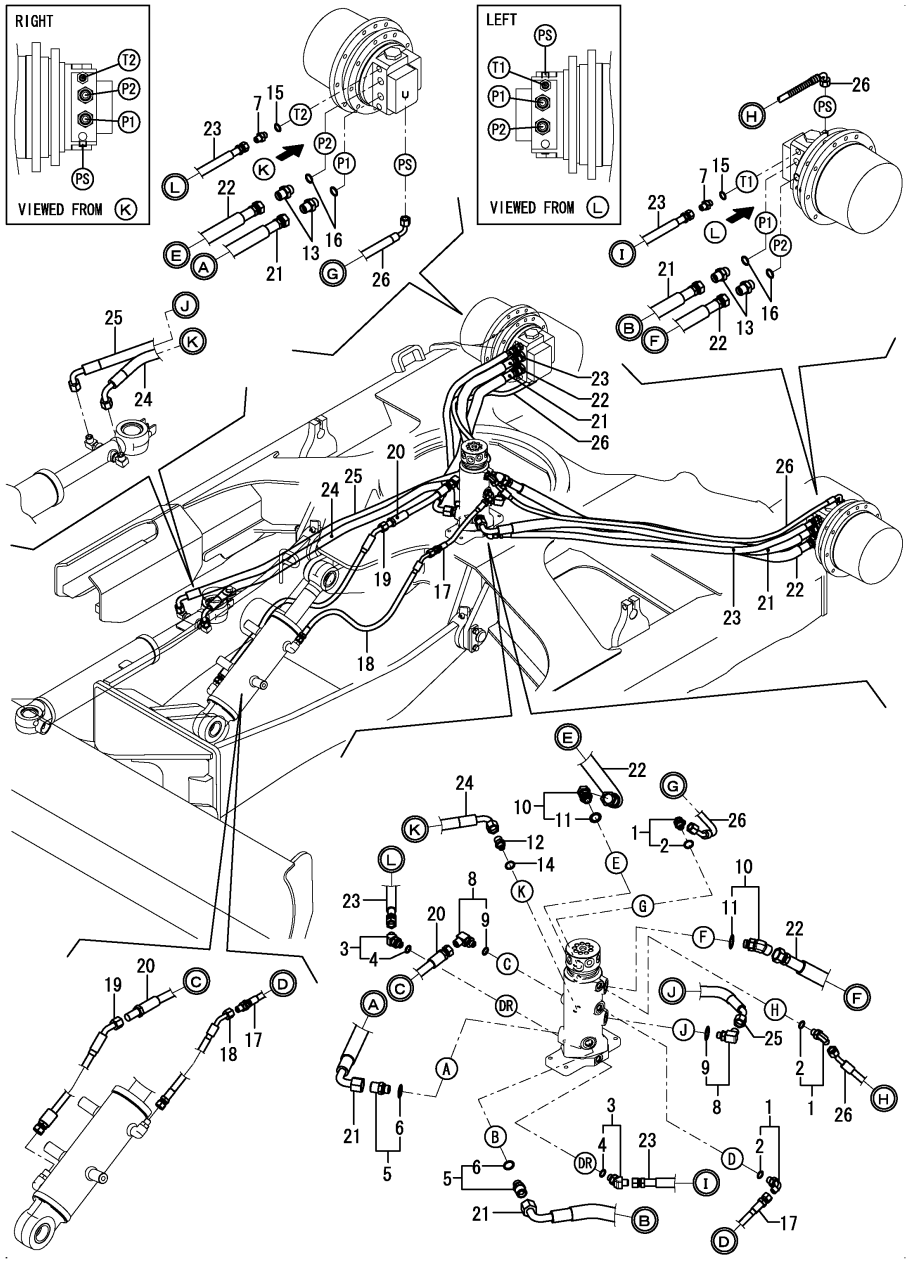

(A)=VIO35-6A P(US)
(B)=VIO35-6A C(US)
(C)=
(D)=
(E)=
(F)=

No.	Lev.	Parts No.	Description	Q'ty (A)	(B)	(C)	(D)	(E)	(F)	I	R
1	1	172B03-76010	ELBOW	3	3						
2	2	41851-000110	O-RING	3	3						
3	1	172173-76102	CONNECTOR ASSY	2	2						
4	2	41851-000110	O-RING	2	2						
5	1	172B03-76110	CONNECTOR, G1/2X3/8	2	2						
6	2	41851-000140	O-RING	2	2						
7	1	172123-76121	ADAPTER	2	2						
8	1	172173-76121	CONNECTOR ASSY	2	2						
9	2	24315-000110	O-RING, 1BP11.0	2	2						
10	1	172B03-76150	ELBOW	2	2						
11	2	41851-000140	O-RING	2	2						
12	1	172638-76190	CONNECTOR,PF1/4PF3/8	1	1						
13	1	172112-77361	CONNECTOR	4	4						
14	1	41851-000110	O-RING	1	1						
15	1	41851-000110	O-RING	2	2						
16	1	41851-000180	O-RING	4	4						
17	1	172B03-78320	HOSE, H204BX027	1	1						
18	1	172B03-78330	HOSE, F204BE063W	1	1						
19	1	172B03-78340	HOSE, F206BE087W	1	1						
20	1	172B03-78350	HOSE, H206BX027	1	1						
21	1	172B03-78360	HOSE, F208BC106W	2	2						
22	1	172B03-78370	HOSE, H208BB103W	2	2						
23	1	172B03-78380	HOSE, F204BB105W	2	2						
24	1	172B03-79080	HOSE, F206CC095W	1	1						
25	1	172B03-79090	HOSE, F206CE125W	1	1						
26	1	172B03-79100	HOSE, F204CE125W	2	2						

Remarks
* Exclusive figure for angle blade specification.

N:Old $\frac{\text{Yes}}{\text{No}}$ New, Q:Old $\frac{\text{No}}{\text{Yes}}$ New, R:Old $\frac{\text{Yes}}{\text{Yes}}$ New, S:Old $\frac{\text{No}}{\text{No}}$ New, W:Add, Z:Discontinued, F:Interchangeable by set, K:Q'ty Change

Copyright (C) YANMAR CO., LTD. All RightsReserved.

Fig.117. ARM CYLINDER & BUCKET CYLINDER

(A)=VIO35-6A P(US)
(B)=VIO35-6A C(US)
(C)=
(D)=
(E)=
(F)=

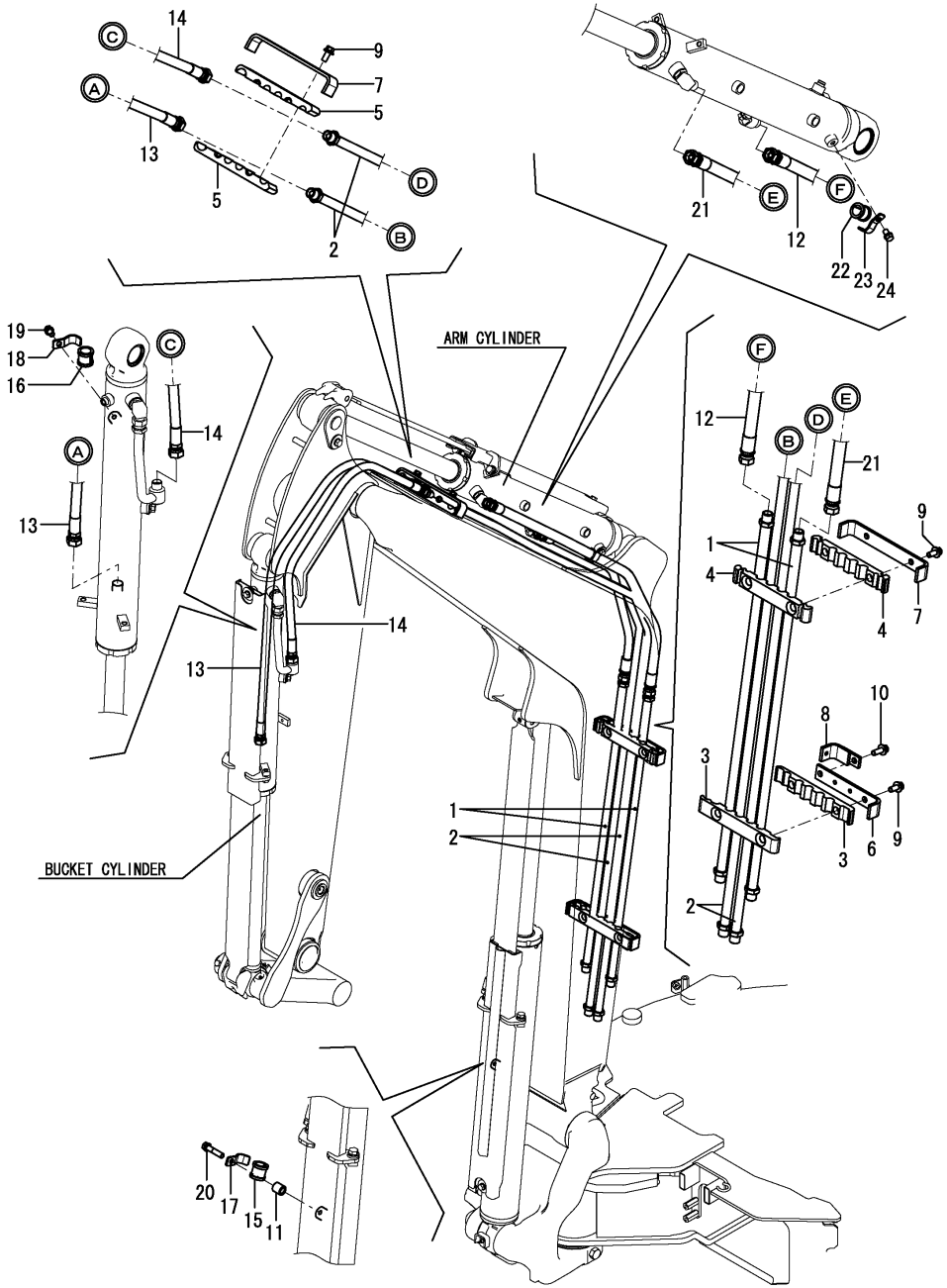

No.	Lev.	Parts No.	Description	Q'ty (A)	(B)	(C)	(D)	(E)	(F)	I	R
1	1	172B03-76220	TUBE ASSY, ARM	2	2						
2	1	172B03-76270	TUBE ASSY, BUCKET	2	2						
3	1	172B03-76400	RUBBER, CLAMP	2	2						
4	1	172B03-76410	RUBBER, CLAMP	2	2						
5	1	172B03-76420	RUBBER, CLAMP	2	2						
6	1	172B03-76440	CLAMP, TUBE	1	1						
7	1	172B03-76450	CLAMP, TUBE	2	2						
8	1	172B03-76470	CLAMP ASSY, BOOM	1	1						
9	1	26014-100252	BOLT, M10X 25	5	5						
10	1	26014-100302	BOLT, M10X 30	1	1						
11	1	172A47-76460	COLLAR	1	1						
12	1	172B03-78400	HOSE, H208BB078K	1	1						
13	1	172B03-78410	HOSE, H208BB124K	1	1						
14	1	172B03-78420	HOSE, H208BB090K	1	1						
15	1	172B03-79860	RUBBER, HOSE CLAMP	1	1						
16	1	172B03-79860	RUBBER, HOSE CLAMP	1	1						
17	1	172B03-79870	CLAMP, HOSE	1	1						
18	1	172B03-79870	CLAMP, HOSE	1	1						
19	1	26013-100162	BOLT, M10X 16	1	1						
20	1	26013-100452	BOLT, M10X 45	1	1						
21	1	172B03-78410	HOSE, H208BB124K	1	1						
22	1	172B03-79860	RUBBER, HOSE CLAMP	1	1						
23	1	172B03-79870	CLAMP, HOSE	1	1						
24	1	26013-100162	BOLT, M10X 16	1	1						

N:Old ◄Yes/No► New, Q:Old ◄No/Yes► New, R:Old ◄Yes/Yes► New, S:Old ◄No/No► New, W:Add, Z:Discontinued, F:Interchangeable by set, K:Q'ty Change

Copyright (C) YANMAR CO., LTD. All RightsReserved.

Fig.118. P.T.O.(CONTROL VALVE - BOOM)

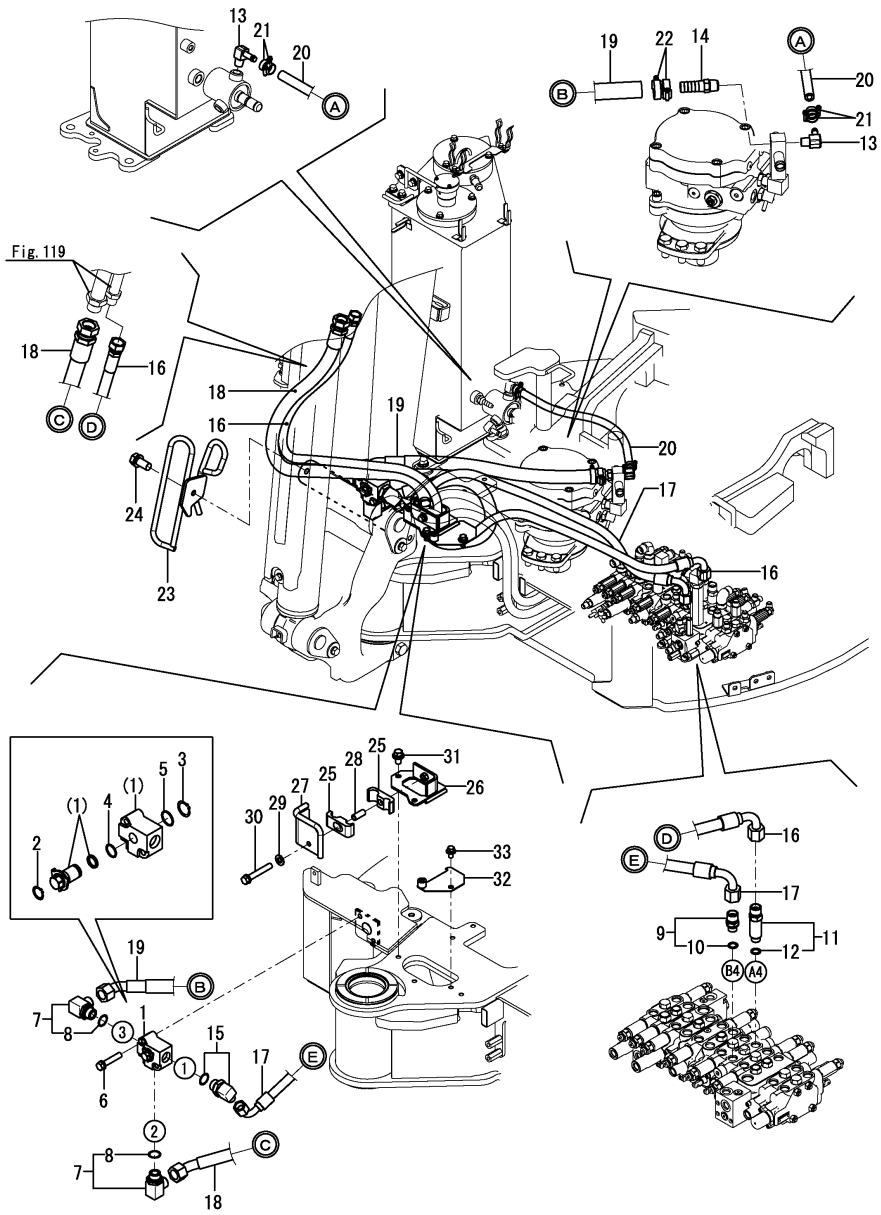

(A)=VIO35-6A P(US)
(B)=VIO35-6A C(US)
(C)=
(D)=
(E)=
(F)=

No.	Lev.	Parts No.	Description	Q'ty (A)	(B)	(C)	(D)	(E)	(F)	I	R
1	1	172A47-74121	VALVE ASSY, SELECOR	1	1						
2	2	22242-000210	RING, 21	1	1						
3	2	22242-000250	RING, 25	1	1						
4	2	24315-000210	O-RING, 1BP21.0	1	1						
5	2	24315-000250	O-RING, 1BP25.0	1	1						
6	1	26013-100552	BOLT, M10X 55	2	2						
7	1	172141-76090	CONNECTOR, PF3/4L	2	2						
8	2	24315-000240	O-RING, 1BP24.0	2	2						
9	1	172B03-76110	CONNECTOR, G1/2X3/8	1	1						
10	2	41851-000140	O-RING	1	1						
11	1	172B03-76160	CONNECTOR, G1/2X3/8M	1	1						
12	2	41851-000140	O-RING	1	1						
13	1	172168-76370	ELBOW	2	2						
14	1	172438-76460	NIPPLE, HOSE	1	1						
15	1	172534-76760	ELBOW	1	1						
16	1	172B03-79110	HOSE, H208BC170K	1	1						
17	1	172B03-79120	HOSE, H208CC088S	1	1						
18	1	172B03-79130	HOSE, G112BE155K	1	1						
19	1	172B03-79140	HOSE, G612EY062S	1	1						
20	1	172B03-79150	HOSE, G606YY050S	1	1						
21	1	23001-019000	CLAMP, HOSE 19	4	4						
21-1	1	23001-019000	CLAMP, HOSE 19	2	2					K	
	(A=MXXXXX)	(B=MXXXXX)									
22	1	23001-035000	CLAMP, HOSE 35	2	2						
23	1	172B03-79811	GUIDE ASSY,HOSE PTO	1	1						
24	1	26013-120252	BOLT, M12X 25	1	1						
25	1	172187-76940	RUBBER	2	2						
26	1	172B03-77610	CLAMP ASSY, HOSE	1	1						
27	1	172B03-77661	CLAMP ASSY,HOSE PTO	1	1						
28	1	172455-79140	COLLAR, CLAMP	1	1						
29	1	22137-100000	WASHER, 10	1	1						
30	1	26013-100652	BOLT, M10X 65	1	1						
31	1	26014-100202	BOLT, M10X 20	2	2						
32	1	172B03-77750	COVER ASSY,TF NO Q K	1	1						1
33	1	26106-100162	BOLT, M10X 16 PLATED	1	1						1

Remarks
(1)Not applied for quick coupler specification.

N:Old $\overset{\text{Yes}}{\underset{\text{No}}{\leftrightarrows}}$ New, Q:Old $\overset{\text{No}}{\underset{\text{Yes}}{\leftrightarrows}}$ New, R:Old $\overset{\text{Yes}}{\underset{\text{Yes}}{\leftrightarrows}}$ New, S:Old $\overset{\text{No}}{\underset{\text{No}}{\leftrightarrows}}$ New, W:Add, Z:Discontinued, F:Interchangeable by set, K:Q'ty Change

Copyright (C) YANMAR CO., LTD. All RightsReserved.

Fig.119. P.T.O.(BOOM - ARM END)

(A)=VIO35-6A P(US)
(B)=VIO35-6A C(US)
(C)=
(D)=
(E)=
(F)=

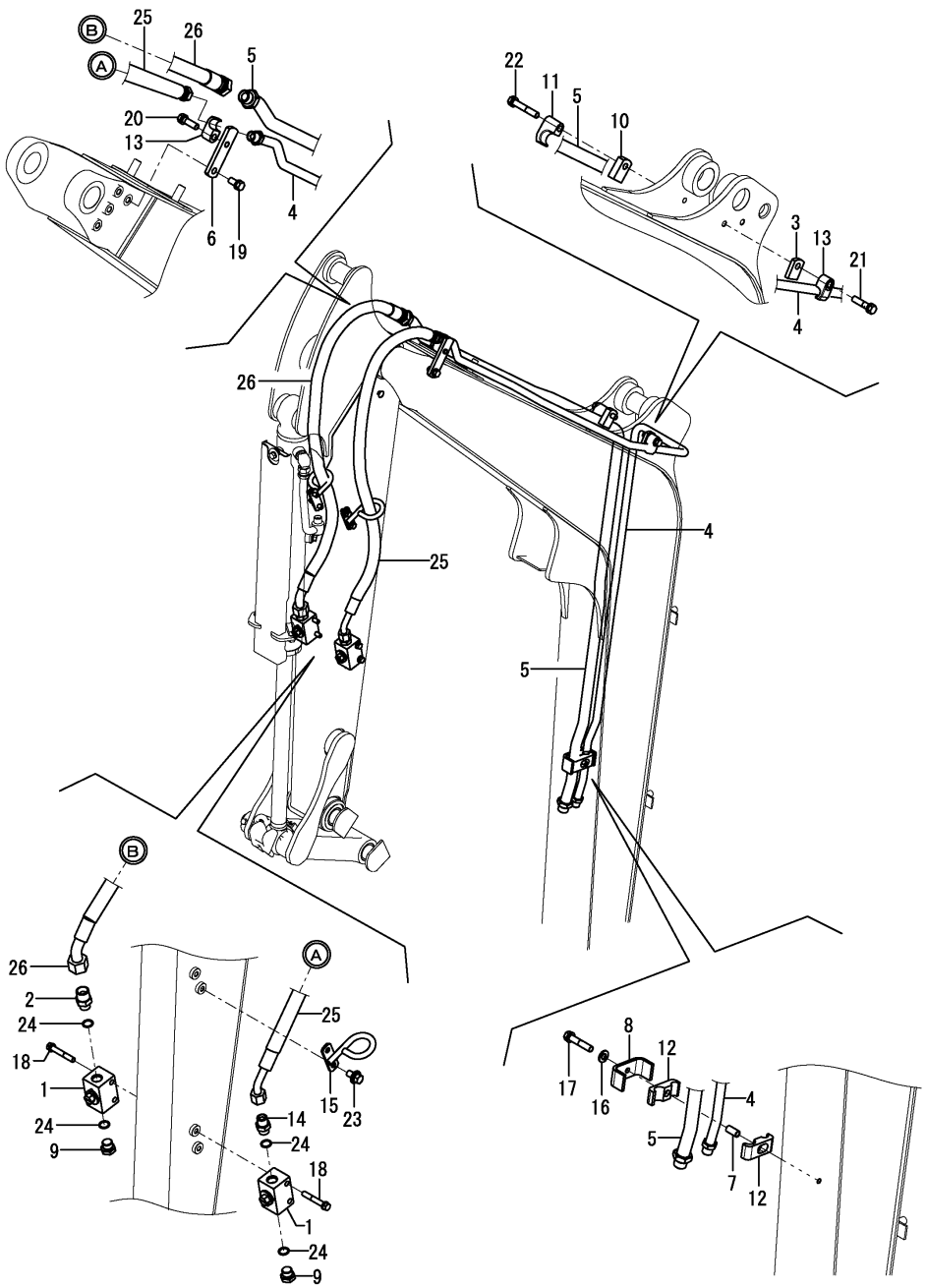

No.	Lev.	Parts No.	Description	Q'ty (A)	(B)	(C)	(D)	(E)	(F)	I	R
1	1	172B03-74900	VALVE ASSY,STOP G1/2	2	2						
2	1	172187-76200	ADAPTER, 1/2-3/4	1	1						
3	1	172183-76250-Y	PLATE, SPACER	1	1						
4	1	172B03-76350	TUBE ASSY, PTO	1	1						
5	1	172B03-76370	TUBE ASSY, PTO	1	1						
6	1	172B03-76510	STAY, CLAMP	1	1						
7	1	172187-76520	COLLAR, CLAMP	1	1						
8	1	172187-76530-Y	CLAMP, TUBE	1	1						
9	1	172165-76580	PLUG PF1/2,HEX.	2	2						
10	1	172187-76690-Y	PLATE	1	1						
11	1	172142-76940-Y	CLAMP	1	1						
12	1	172187-76940	RUBBER	2	2						
13	1	172142-76950-Y	CLAMP, 1/2	2	2						
14	1	172112-77361	CONNECTOR	1	1						
15	1	172B03-77900	GUIDE ASSY, HOSE	2	2						
16	1	22137-100000	WASHER, 10	1	1						
17	1	26013-100502	BOLT, M10X 50	1	1						
18	1	26013-100652	BOLT, M10X 65	4	4						
19	1	26013-120252	BOLT, M12X 25	1	1						
20	1	26013-120402	BOLT, M12X 40	1	1						
21	1	26013-120502	BOLT, M12X 50	1	1						
22	1	26013-120702	BOLT, M12X 70	1	1						
23	1	26014-100202	BOLT, M10X 20	4	4						
24	1	41851-000180	O-RING	4	4						
25	1	172B03-79160	HOSE, H208BE111W	1	1						
26	1	172B03-79170	HOSE, H112BE117W	1	1						

N:Old ←Yes/No→ New, Q:Old ←No/Yes→ New, R:Old ←Yes/Yes→ New, S:Old ←No/No→ New, W:Add, Z:Discontinued, F:Interchangeable by set, K:Q'ty Change

Copyright (C) YANMAR CO., LTD. All RightsReserved.

Fig.120. P.T.O.(SOLENOID VALVE)

(A)=VIO35-6A P(US)
(B)=VIO35-6A C(US)
(C)=
(D)=
(E)=
(F)=

No.	Lev.	Parts No.	Description	Q'ty (A)	(B)	(C)	(D)	(E)	(F)	I	R
1	1	172B03-76010	ELBOW	2	2						
2	2	41851-000110	O-RING	2	2						
3	1	172123-76121	ADAPTER	2	2						
4	1	172458-76150	NIPPLE, ELBOW	1	1						
5	2	24315-000110	O-RING, 1BP11.0	1	1						
6	1	172B03-76180	CONNECTOR,FILT G1/4	1	1						
7	2	41851-000110	O-RING	1	1						
8	1	172186-76390	NIPPLE, ELBOW	1	1						
9	1	41851-000110	O-RING	2	2						
10	1	172B03-79210	HOSE, F403BB029S	1	1						
11	1	172B03-79230	HOSE, F403BC041S	1	1						
12	1	172B03-79240	HOSE, F403BC047S	1	1						
13	1	172B03-79250	HOSE, G804YY125S	1	1						
14	1	23000-013000	CLAMP, 13	2	2						

Remarks
* Not applied for angle blade specification.

N:Old ←Yes/No→ New, Q:Old ←No/Yes→ New, R:Old ←Yes/Yes→ New, S:Old ←No/No→ New, W:Add, Z:Discontinued, F:Interchangeable by set, K:Q'ty Change

Copyright (C) YANMAR CO., LTD. All RightsReserved.

Fig.181. (120A)P.T.O.(SOLENOID VALVE)(ANGLE BLADE SPEC.)

(A)=VIO35-6A P(US)
(B)=VIO35-6A C(US)
(C)=
(D)=
(E)=
(F)=

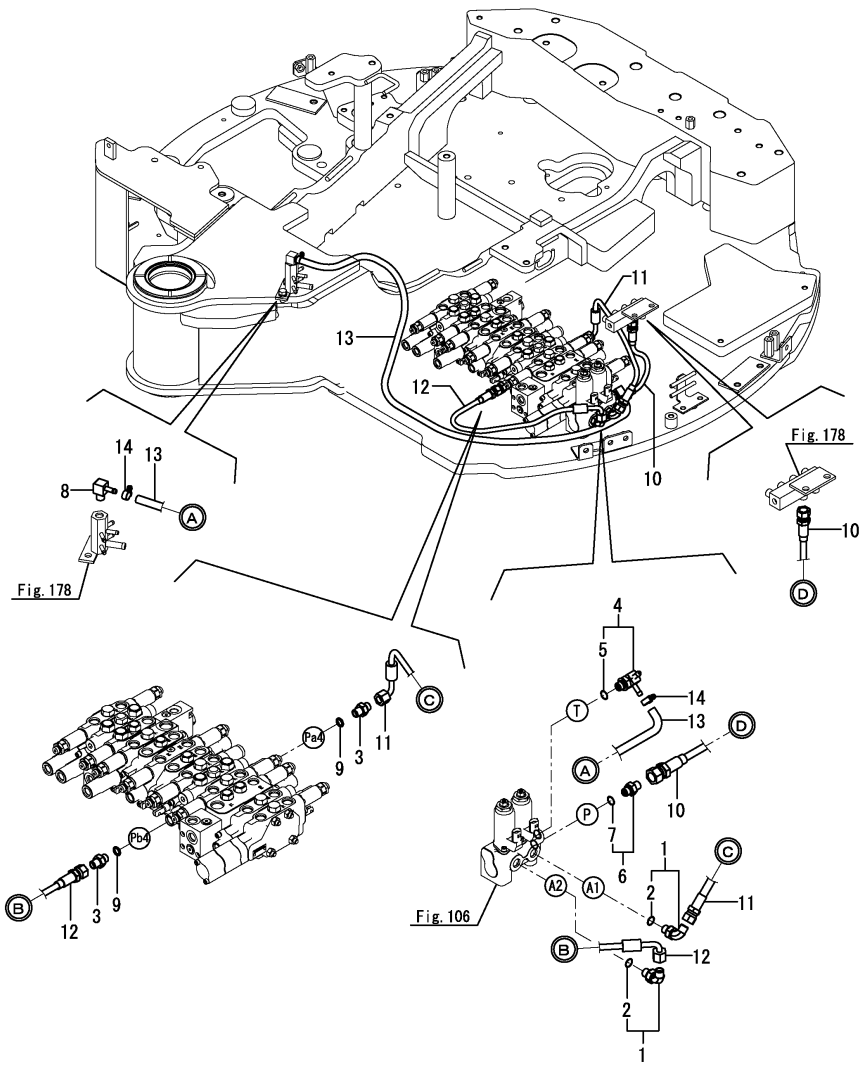

No.	Lev.	Parts No.	Description	Q'ty (A)	(B)	(C)	(D)	(E)	(F)	I	R
1	1	172B03-76010	ELBOW	2	2						
2	2	41851-000110	O-RING	2	2						
3	1	172123-76121	ADAPTER	2	2						
4	1	172A79-76140	NIPPLE, G1/4	1	1						
5	2	41851-000110	O-RING	1	1						
6	1	172B03-76180	CONNECTOR,FILT G1/4	1	1						
7	2	41851-000110	O-RING	1	1						
8	1	172186-76390	NIPPLE, ELBOW	1	1						
9	1	41851-000110	O-RING	2	2						
10	1	172B03-79211	HOSE, H603BB029S	1	1						
11	1	172B03-79230	HOSE, F403BC041S	1	1						
12	1	172B03-79241	HOSE, F403BC050S	1	1						
13	1	172B03-79250	HOSE, G804YY134S	1	1						
14	1	23000-013000	CLAMP, 13	2	2						

Remarks
* Exclusive figure for angle blade specification.

N:Old ←Yes/No→ New, Q:Old ←No/Yes→ New, R:Old ←Yes/Yes→ New, S:Old ←No/No→ New, W:Add, Z:Discontinued, F:Interchangeable by set, K:Q'ty Change

Copyright (C) YANMAR CO., LTD. All RightsReserved.

Fig.121. P.T.O.(SOLENOID VAVLE, ESS)

(A)=VIO35-6A P(US)
(B)=VIO35-6A C(US)
(C)=
(D)=
(E)=
(F)=

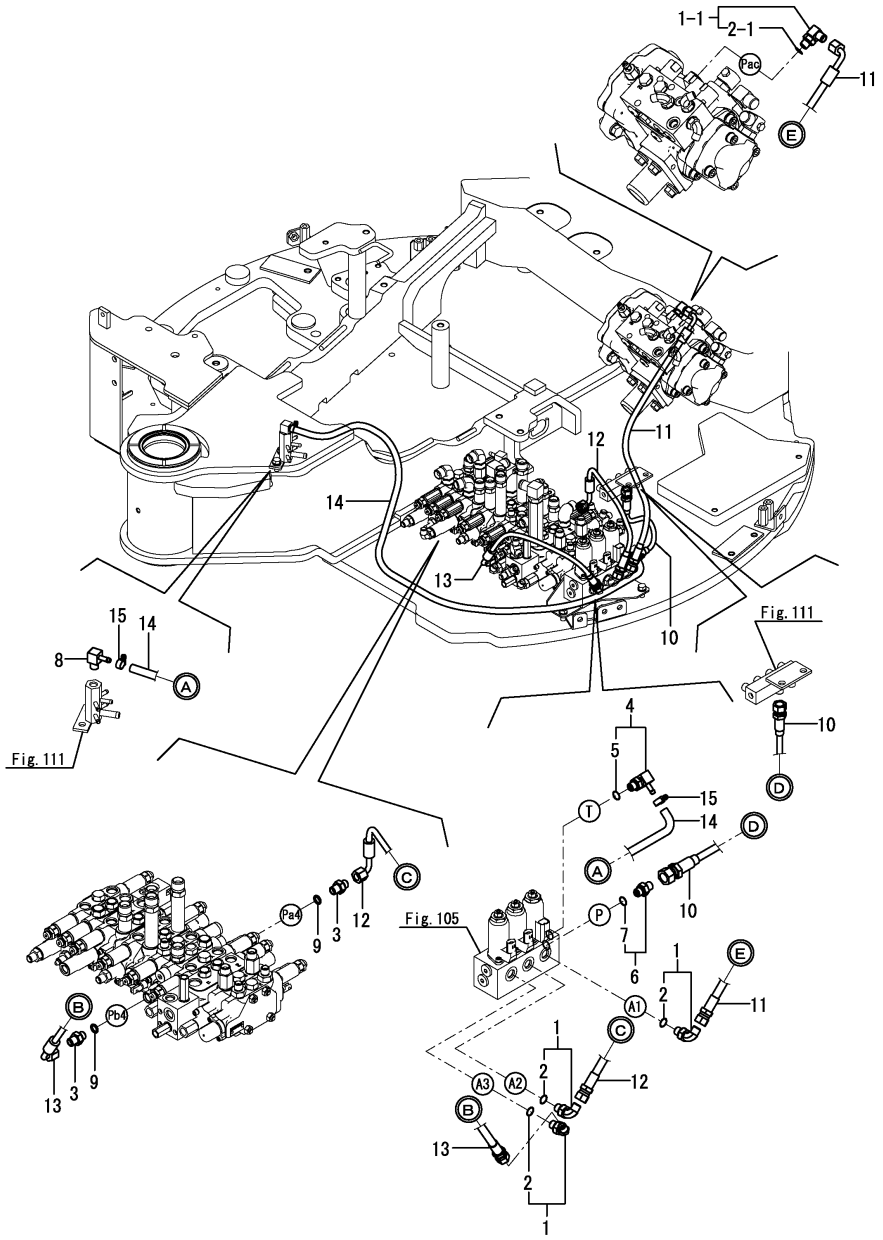

No.	Lev.	Parts No.	Description	Q'ty (A)	(B)	(C)	(D)	(E)	(F)	I	R
1	1	172B03-76010	ELBOW		3						
1-1	1	172B03-76010	ELBOW		4					K	
		(B=MXXXXX)									
2	2	41851-000110	O-RING		3						
2-1	2	41851-000110	O-RING		4					K	
		(B=MXXXXX)									
3	1	172123-76121	ADAPTER		2						
4	1	172458-76150	NIPPLE, ELBOW		1						
5	2	24315-000110	O-RING, 1BP11.0		1						
6	1	172B03-76180	CONNECTOR,FILT G1/4		1						
7	2	41851-000110	O-RING		1						
8	1	172186-76390	NIPPLE, ELBOW		1						
9	1	41851-000110	O-RING		2						
10	1	172B03-79210	HOSE, F403BB029S		1						
11	1	172B03-79220	HOSE, H403BC065S		1						
12	1	172B03-79230	HOSE, F403BC041S		1						
13	1	172B03-79240	HOSE, F403BC047S		1						
14	1	172B03-79250	HOSE, G804YY125S		1						
15	1	23000-013000	CLAMP, 13		2						

Remarks
* Not applied for angle blade specification.

N:Old $\frac{\text{Yes}}{\text{No}}$ New, Q:Old $\frac{\text{No}}{\text{Yes}}$ New, R:Old $\frac{\text{Yes}}{\text{Yes}}$ New, S:Old $\frac{\text{No}}{\text{No}}$ New, W:Add, Z:Discontinued, F:Interchangeable by set, K:Q'ty Change

Copyright (C) YANMAR CO., LTD. All RightsReserved.

Fig.182. (121A)P.T.O.(SOLENOID VAVLE, ESS)(ANGLE BLADE SPEC.)

(A)=VIO35-6A P(US)
(B)=VIO35-6A C(US)
(C)=
(D)=
(E)=
(F)=

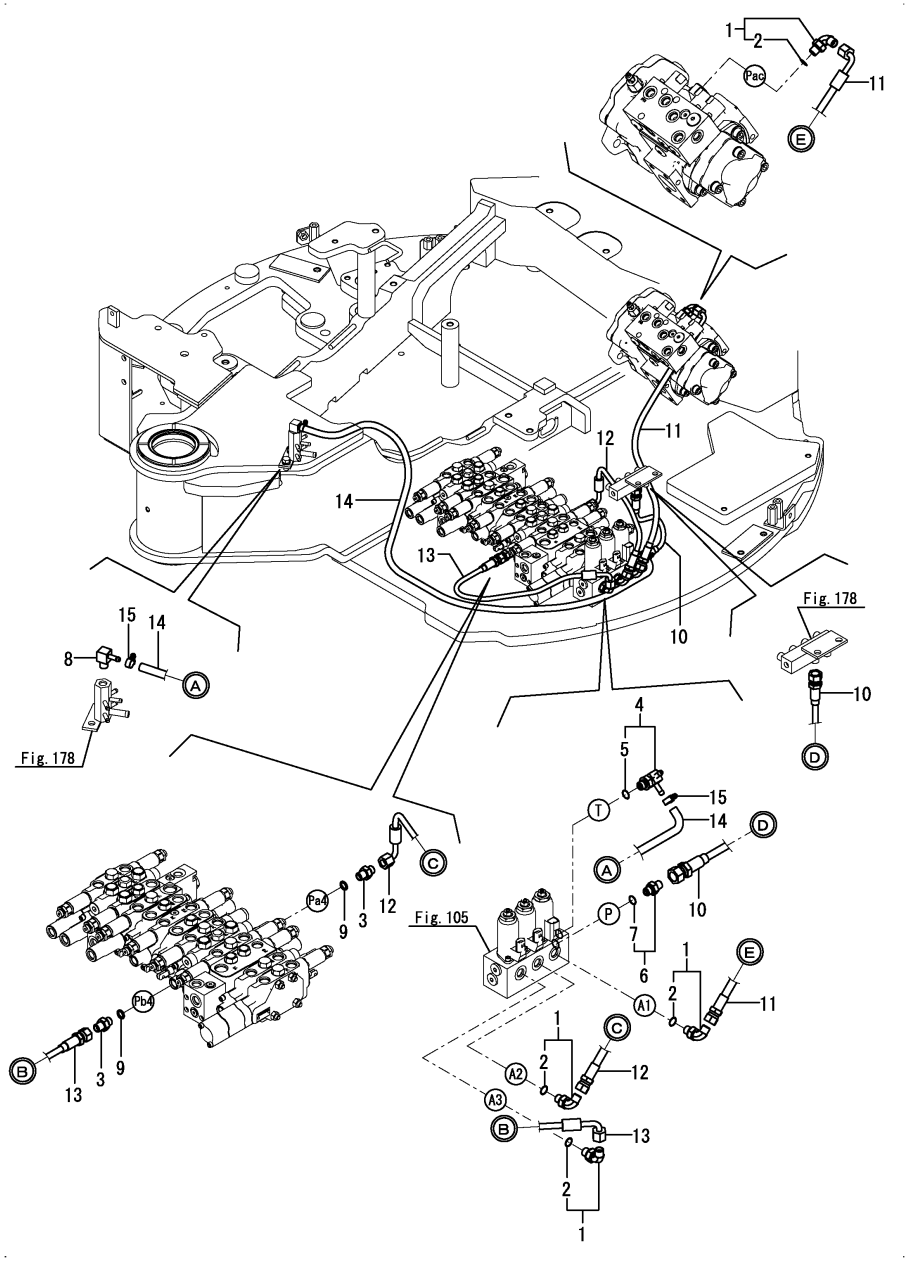

No.	Lev.	Parts No.	Description	Q'ty (A)	(B)	(C)	(D)	(E)	(F)	I	R
1	1	172B03-76010	ELBOW		4						
2	2	41851-000110	O-RING		4						
3	1	172123-76121	ADAPTER		2						
4	1	172A79-76140	NIPPLE, G1/4		1						
5	2	41851-000110	O-RING		1						
6	1	172B03-76180	CONNECTOR,FILT G1/4		1						
7	2	41851-000110	O-RING		1						
8	1	172186-76390	NIPPLE, ELBOW		1						
9	1	41851-000110	O-RING		2						
10	1	172B03-79211	HOSE, H603BB029S		1						
11	1	172B03-79220	HOSE, H403BC065S		1						
12	1	172B03-79230	HOSE, F403BC041S		1						
13	1	172B03-79241	HOSE, F403BC050S		1						
14	1	172B03-79250	HOSE, G804YY134S		1						
15	1	23000-013000	CLAMP, 13		2						

Remarks
* Exclusive figure for angle blade specification.

N:Old $\frac{\text{Yes}}{\text{No}}$ New, Q:Old $\frac{\text{No}}{\text{Yes}}$ New, R:Old $\frac{\text{Yes}}{\text{Yes}}$ New, S:Old $\frac{\text{No}}{\text{No}}$ New, W:Add, Z:Discontinued, F:Interchangeable by set, K:Q'ty Change

Copyright (C) YANMAR CO., LTD. All RightsReserved.

Fig.183. (121B)P.T.O.2(ANGLE BLADE)(ANGLE BLADE SPEC.)

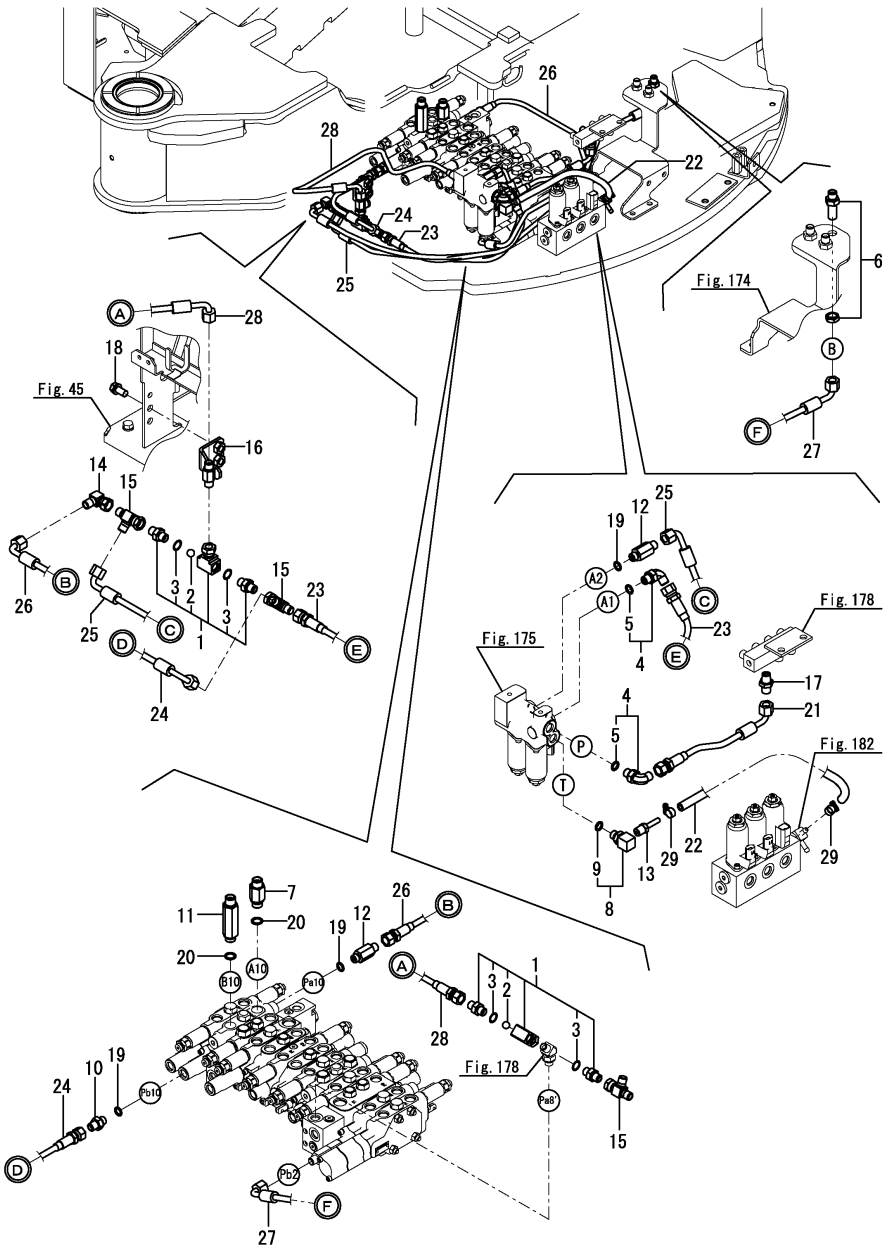

(A)=VIO35-6A P(US)
(B)=VIO35-6A C(US)
(C)=
(D)=
(E)=
(F)=

No.	Lev.	Parts No.	Description	Q'ty (A)	(B)	(C)	(D)	(E)	(F)	I	R
1	1	172A86-74500	VALVE, SHUTTLE	2	2						
2	2	24190-140001	BALL, STEEL 7/16	2	2						
3	2	41851-000110	O-RING	4	4						
4	1	172B03-76010	ELBOW	2	2						
5	2	41851-000110	O-RING	2	2						
6	1	172151-76050	JOINT	1	1						
7	1	172B03-76070	CONNECTOR, G3/8X3/8	1	1						
7-1	1	172116-76381	ADAPTER, 64	1	1					N	
	(A=*2014.09.)	(B=*2014.09.)									
8	1	172137-76100	ELBOW	1	1						
9	2	24315-000110	O-RING, 1BP11.0	1	1						
10	1	172123-76121	ADAPTER	1	1						
11	1	172162-76131	ADAPTER	1	1						
12	1	172183-76200	CONNECTOR	2	2						
13	1	172141-76220	NIPPLE, 02	1	1						
14	1	172828-76330	CONNECTOR, 1/4X1/4	1	1						
15	1	172B03-76620	CONNECTOR,3-G1/4	3	3						
16	1	172B03-76650	STAY ASSY, SHUTTLE V	1	1						
17	1	23391-020000	JOINT, RGI-1/4	1	1						
18	1	26013-100202	BOLT, M10X 20	2	2						
19	1	41851-000110	O-RING	3	3						
20	1	41851-000140	O-RING	2	2						
21	1	172B03-79280	HOSE, F403BC026S	1	1						
22	1	172B03-79290	HOSE, G804YY034S	1	1						
23	1	172B03-79360	HOSE, F403BB042S	1	1						
24	1	172B03-79370	HOSE, F403BC028S	1	1						
25	1	172B03-79380	HOSE, F403CC062S	1	1						
26	1	172B03-79390	HOSE, F403BC137S	1	1						
27	1	172B03-79590	HOSE, F403CC065S	1	1						
28	1	172B03-79790	HOSE, F403BC064S	1	1						
29	1	23000-013000	CLAMP, 13	2	2						

Remarks
* Exclusive figure for angle blade specification.

N:Old $\xleftarrow[\text{No}]{\text{Yes}}$ New, Q:Old $\xleftarrow[\text{Yes}]{\text{No}}$ New, R:Old $\xleftarrow[\text{Yes}]{\text{Yes}}$ New, S:Old $\xleftarrow[\text{No}]{\text{No}}$ New, W:Add, Z:Discontinued, F:Interchangeable by set, K:Q'ty Change

Copyright (C) YANMAR CO., LTD. All RightsReserved.

Fig.122. CONTROL PIPING(1)

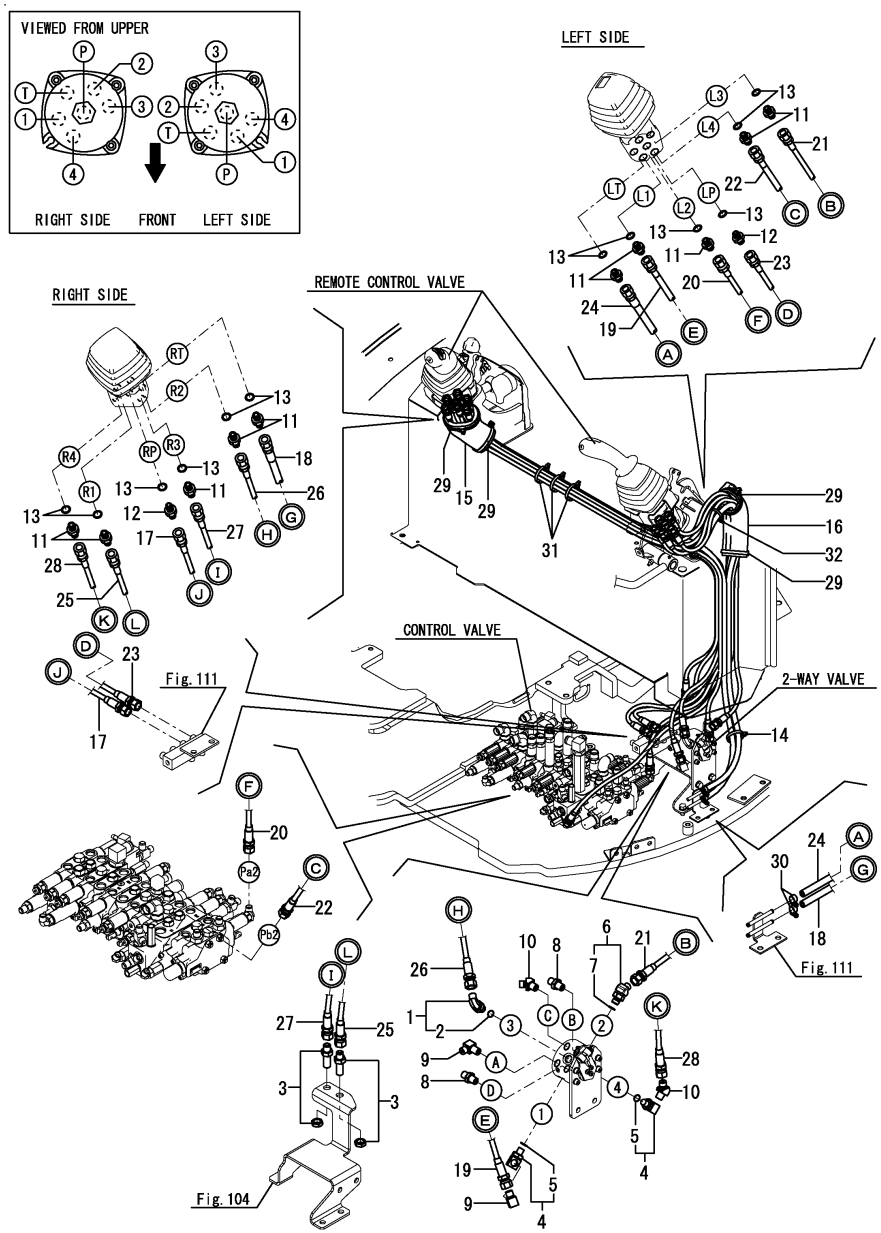

(A)=VIO35-6A P(US)
(B)=VIO35-6A C(US)
(C)=
(D)=
(E)=
(F)=

No.	Lev.	Parts No.	Description	Q'ty (A)	(B)	(C)	(D)	(E)	(F)	I	R
1	1	172B03-76010	ELBOW	1	1						
2	2	41851-000110	O-RING	1	1						
3	1	172151-76050	JOINT	2	2						
4	1	172137-76100	ELBOW	2	2						
5	2	24315-000110	O-RING, 1BP11.0	2	2						
6	1	172173-76102	CONNECTOR ASSY	1	1						
7	2	41851-000110	O-RING	1	1						
8	1	23391-020000	JOINT, RGI-1/4	2	2						
9	1	23393-020000	JOINT, 90RGI-1/4	2	2						
10	1	23394-020000	JOINT, 45RGI-1/4	2	2						
11	1	172123-76121	ADAPTER	10	10						
12	1	172455-76220	CONNECTOR	2	2						
13	1	41851-000110	O-RING	12	12						
14	1	172183-16560	CLIP, HOSE	1	1						
15	1	172458-63641	SPONGE, HOSE	1	1						
16	1	172458-78571	SPONGE, HOSE	1	1						
17	1	172B03-78910	HOSE, F403BB165S	1	1						
18	1	172B03-78920	HOSE, G804BY165S	1	1						
19	1	172B03-79610	HOSE, F403BB110S	1	1						
20	1	172B03-79620	HOSE, F403BB113S	1	1						
21	1	172B03-79630	HOSE, F403BB095S	1	1						
22	1	172B03-79640	HOSE, F403BB138S	1	1						
23	1	172B03-79650	HOSE, F403BB110S	1	1						
24	1	172B03-79660	HOSE, G804BY115S	1	1						
25	1	172B03-79670	HOSE, F403BB140S	1	1						
26	1	172B03-79680	HOSE, F403BB148S	1	1						
27	1	172B03-79690	HOSE, F403BB136S	1	1						
28	1	172B03-79700	HOSE, F403BB148S	1	1						
29	1	172122-79930	CLAMP, HOSE	4	4						
30	1	23000-013000	CLAMP, 13	2	2						
31	1	172126-11510	BAND	3	3						W
	(A=MZZZZZ)		(B=MZZZZZ)								
32	1	172126-11510	BAND	1	1						W
	(A=M60877)		(B=M60877)								

Remarks
* Not applied for angle blade specification.
* Fitting(control valve) is shown in Fig.110 & 111.

N:Old $\frac{\text{Yes}}{\text{No}}$ New, Q:Old $\frac{\text{No}}{\text{Yes}}$ New, R:Old $\frac{\text{Yes}}{\text{Yes}}$ New, S:Old $\frac{\text{No}}{\text{No}}$ New, W:Add, Z:Discontinued, F:Interchangeable by set, K:Q'ty Change

Copyright (C) YANMAR CO., LTD. All RightsReserved.

Fig.184. (122A)CONTROL PIPING(1)(ANGLE BLADE SPEC.)

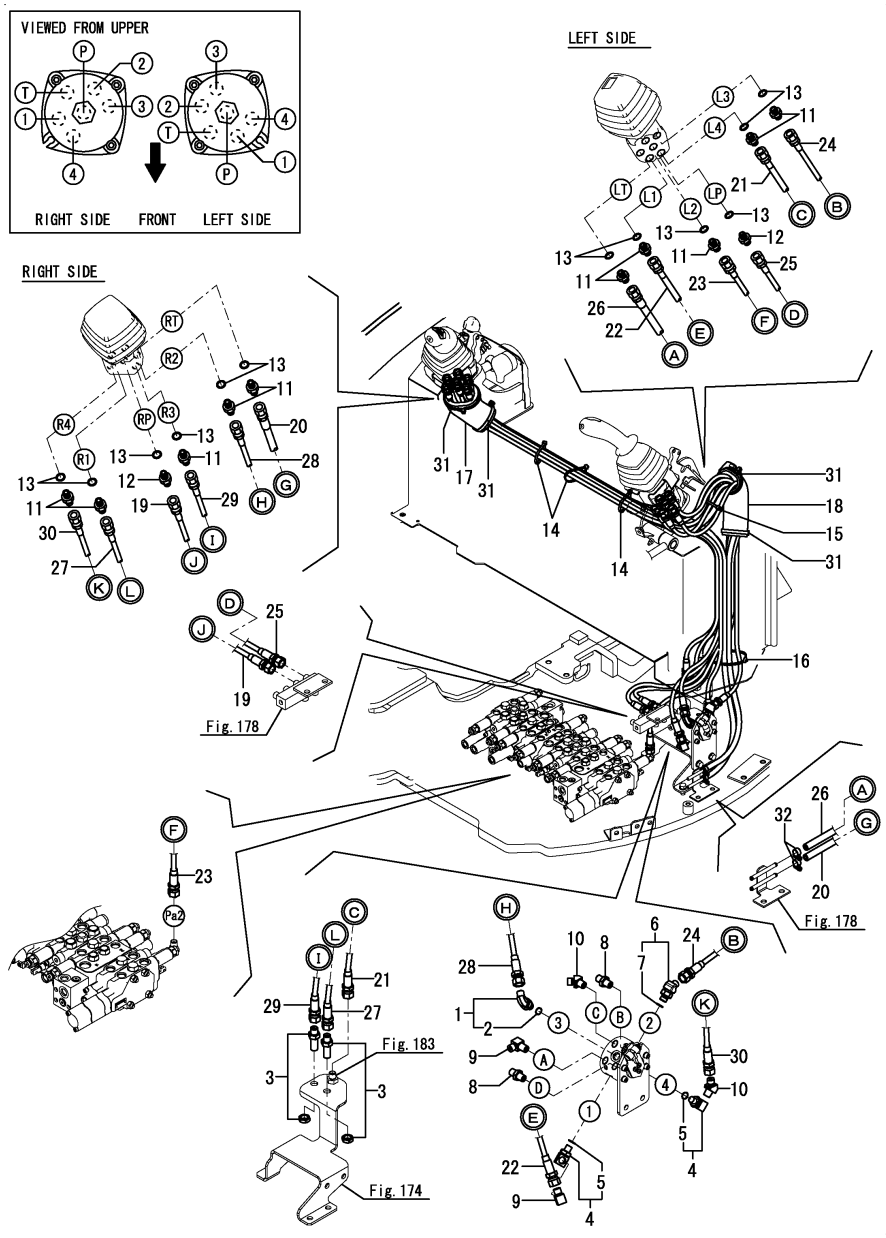

(A)=VIO35-6A P(US)
(B)=VIO35-6A C(US)
(C)=
(D)=
(E)=
(F)=

No.	Lev.	Parts No.	Description	Q'ty (A)	(B)	(C)	(D)	(E)	(F)	I	R
1	1	172B03-76010	ELBOW	1	1						
2	2	41851-000110	O-RING	1	1						
3	1	172151-76050	JOINT	2	2						
4	1	172137-76100	ELBOW	2	2						
5	2	24315-000110	O-RING, 1BP11.0	2	2						
6	1	172173-76102	CONNECTOR ASSY	1	1						
7	2	41851-000110	O-RING	1	1						
8	1	23391-020000	JOINT, RGI-1/4	2	2						
9	1	23393-020000	JOINT, 90RGI-1/4	2	2						
10	1	23394-020000	JOINT, 45RGI-1/4	2	2						
11	1	172123-76121	ADAPTER	10	10						
12	1	172455-76220	CONNECTOR	2	2						
13	1	41851-000110	O-RING	12	12						
14	1	172126-11510	BAND	3	3						
15	1	172126-11510	BAND	1	1						
16	1	172183-16560	CLIP, HOSE	1	1						
17	1	172458-63641	SPONGE, HOSE	1	1						
18	1	172458-78571	SPONGE, HOSE	1	1						
19	1	172B03-78910	HOSE, F403BB165S	1	1						
20	1	172B03-78920	HOSE, G804BY165S	1	1						
21	1	172B03-79580	HOSE, F403BB083S	1	1						
22	1	172B03-79610	HOSE, F403BB110S	1	1						
23	1	172B03-79620	HOSE, F403BB113S	1	1						
24	1	172B03-79630	HOSE, F403BB095S	1	1						
25	1	172B03-79650	HOSE, F403BB110S	1	1						
26	1	172B03-79660	HOSE, G804BY115S	1	1						
27	1	172B03-79670	HOSE, F403BB140S	1	1						
28	1	172B03-79680	HOSE, F403BB148S	1	1						
29	1	172B03-79690	HOSE, F403BB136S	1	1						
30	1	172B03-79700	HOSE, F403BB148S	1	1						
31	1	172122-79930	CLAMP, HOSE	4	4						
32	1	23000-013000	CLAMP, 13	2	2						

Remarks
* Exclusive figure for angle blade specification.
* Fitting(control valve) is shown in Fig.177 & 178.

N:Old ◄Yes/No► New, Q:Old ◄No/Yes► New, R:Old ◄Yes/Yes► New, S:Old ◄No/No► New, W:Add, Z:Discontinued, F:Interchangeable by set, K:Q'ty Change

Copyright (C) YANMAR CO., LTD. All RightsReserved.

Fig.123. CONTROL PIPING(2)

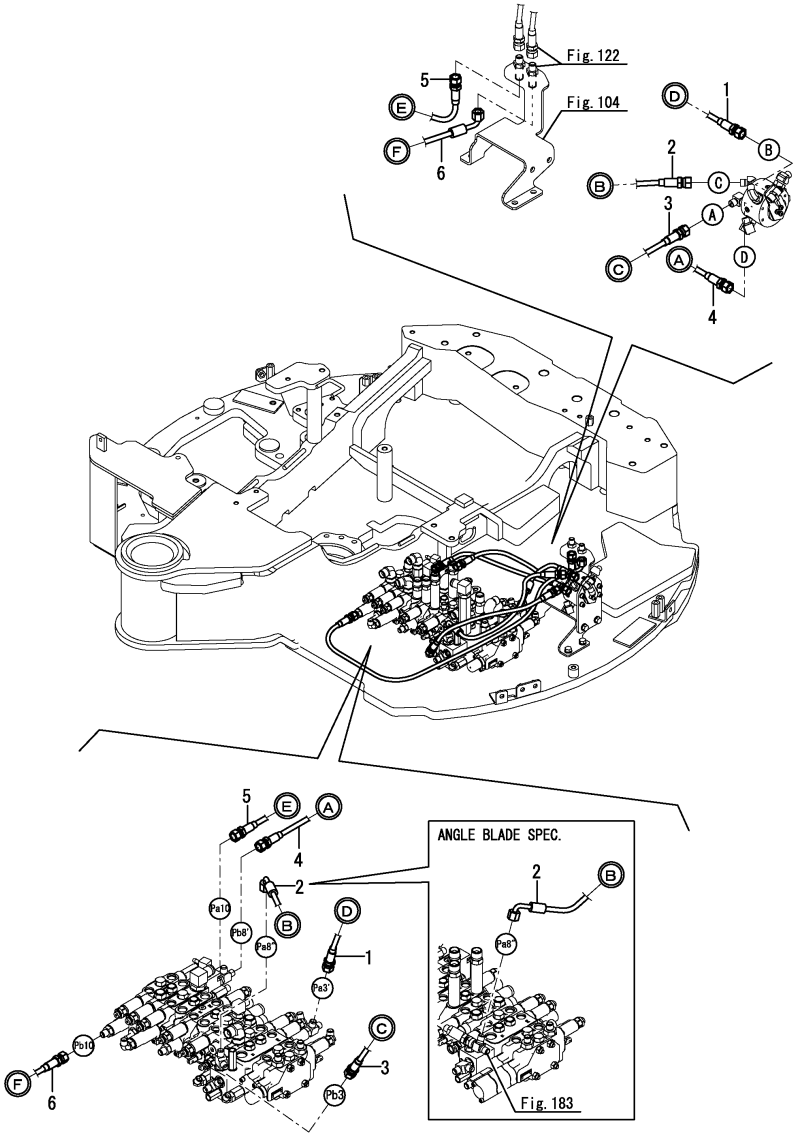

(A)=VIO35-6A P(US)
(B)=VIO35-6A C(US)
(C)=
(D)=
(E)=
(F)=

No.	Lev.	Parts No.	Description	Q'ty (A)	(B)	(C)	(D)	(E)	(F)	I	R
1	1	172B03-79510	HOSE, F403BC023	1	1						
2	1	172B03-79520	HOSE, F403BC044	1	1						
3	1	172B03-79530	HOSE, F403BB047S	1	1						
4	1	172B03-79540	HOSE, F403BB047S	1	1						
5	1	172B03-79550	HOSE, F403BB050S	1	1						
6	1	172B03-79560	HOSE, F403BC101S	1	1						

Remarks
* Standard blade specification : Fitting(control valve) is shown in Fig.110 & 111.
* Angle blade specification : Fitting(control valve) is shown in Fig.177 & 178.

N:Old ◄Yes/No► New, Q:Old ◄No/Yes► New, R:Old ◄Yes/Yes► New, S:Old ◄No/No► New, W:Add, Z:Discontinued, F:Interchangeable by set, K:Q'ty Change

Copyright (C) YANMAR CO., LTD. All RightsReserved.

Fig.124. ACCUMULATOR

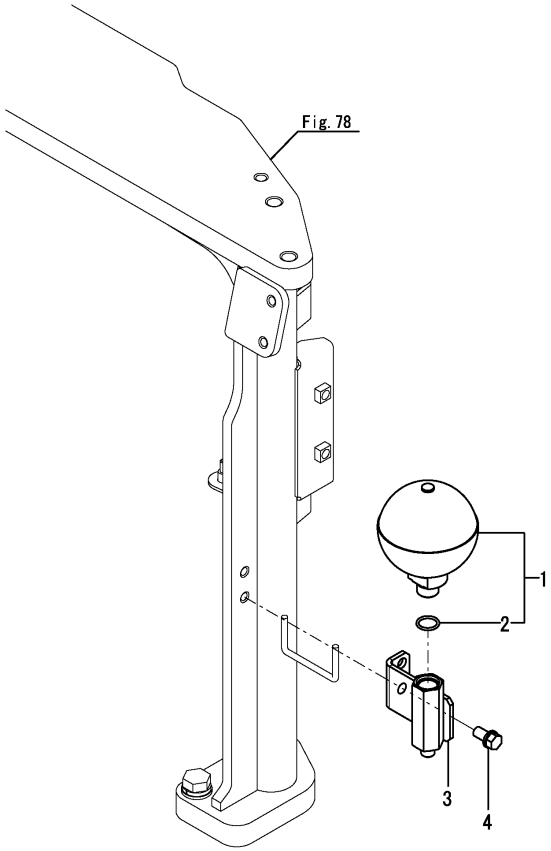

(A)=VIO35-6A P(US)
(B)=VIO35-6A C(US)
(C)=
(D)=
(E)=
(F)=

No.	Lev.	Parts No.	Description	Q'ty (A)	(B)	(C)	(D)	(E)	(F)	I	R
1	1	172B03-73600	ACCUMULATOR	1	1						
2	2	41851-000180	O-RING	1	1						
3	1	172B03-76030	STAY ASSY	1	1						
4	1	26013-100202	BOLT, M10X 20	2	2						

N:Old $\xleftrightarrow[\text{No}]{\text{Yes}}$ New, Q:Old $\xleftrightarrow[\text{Yes}]{\text{No}}$ New, R:Old $\xleftrightarrow[\text{Yes}]{\text{Yes}}$ New, S:Old $\xleftrightarrow[\text{No}]{\text{No}}$ New, W:Add, Z:Discontinued, F:Interchangeable by set, K:Q'ty Change

Copyright (C) YANMAR CO., LTD. All RightsReserved.

Fig.125. GREASING

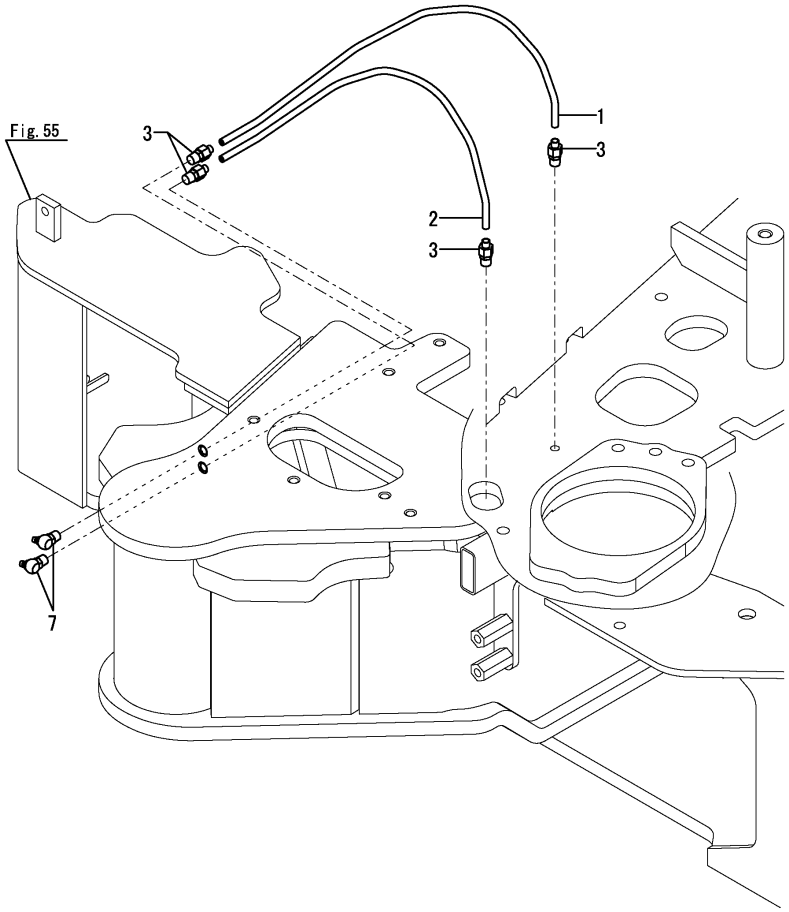

(A)=VIO35-6A P(US)
(B)=VIO35-6A C(US)
(C)=
(D)=
(E)=
(F)=

No.	Lev.	Parts No.	Description	Q'ty (A)	(B)	(C)	(D)	(E)	(F)	I	R
1	1	172A46-77800	HOSE	1	1						
2	1	172A89-77800	HOSE P602YY045	1	1						
3	1	172A47-77820	JOINT, GREASE	4	4						
7	1	24761-040000	NIPPLE, GREASE B	2	2						

N:Old $\xleftarrow[\text{No}]{\text{Yes}}$ New, Q:Old $\xleftarrow[\text{Yes}]{\text{No}}$ New, R:Old $\xleftarrow[\text{Yes}]{\text{Yes}}$ New, S:Old $\xleftarrow[\text{No}]{\text{No}}$ New, W:Add, Z:Discontinued, F:Interchangeable by set, K:Q'ty Change

Copyright (C) YANMAR CO., LTD. All RightsReserved.

Fig.127. QUICK COUPLER(HYD. OIL PIPING)(1)

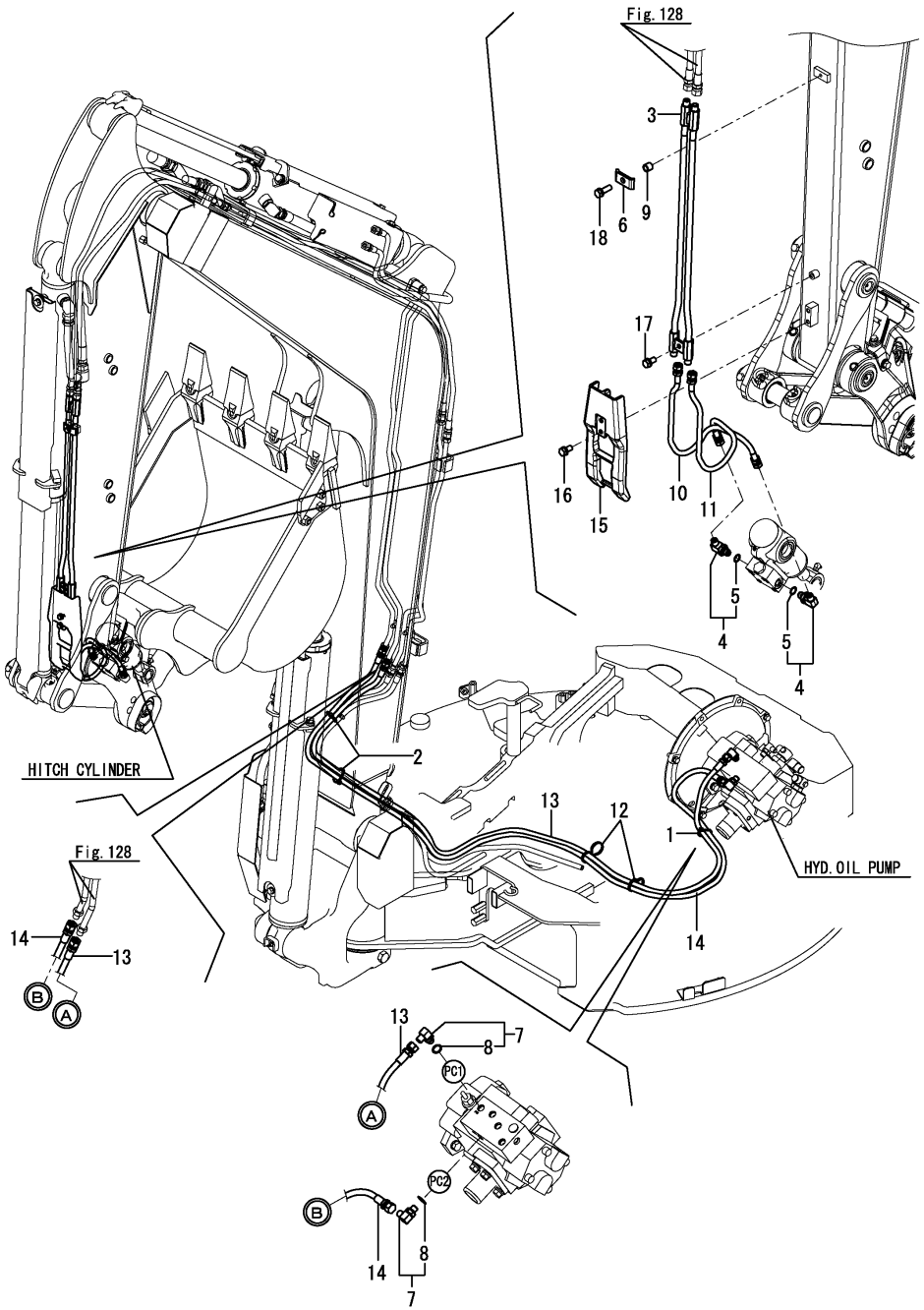

(A)=VIO35-6A P(US) (D)=
(B)=VIO35-6A C(US) (E)=
(C)= (F)=

No.	Lev.	Parts No.	Description	Q'ty (A)	(B)	(C)	(D)	(E)	(F)	I	R
1	1	194202-56460	BAND, 200	1	1						
2	1	194202-56460	BAND, 200	2	2						
3	1	172958-76102-Y	TUBE, HITCH	1	1						
4	1	172958-76130	ELBOW	2	2						
5	2	24315-000110	O-RING, 1BP11.0	2	2						
6	1	172110-76170	PLATE	1	1						
7	1	172141-76181	CONNECTOR ASSY, 02FF	2	2						
7-1	1	172B03-76010	ELBOW	2	2						R
	(A=MXXXXX)	(B=MXXXXX)									
8	2	41851-000110	O-RING	2	2						
9	1	172137-76580	COLLAR	1	1						
10	1	172958-78200	HOSE	1	1						
11	1	172958-78210	HOSE	1	1						
12	1	172187-78580	BAND	2	2						
13	1	172B03-79010	HOSE, H604BB238K	1	1						
14	1	172B03-79020	HOSE, H604BB238K	1	1						
15	1	172958-81904-Y	COVER, ARM	1	1						
16	1	26013-080162	BOLT, M8X 16	2	2						
17	1	26013-080162	BOLT, M8X 16	1	1						
18	1	26014-080252	BOLT, M8X 25	1	1						

N:Old $\frac{\text{Yes}}{\text{No}}$ New, Q:Old $\frac{\text{No}}{\text{Yes}}$ New, R:Old $\frac{\text{Yes}}{\text{Yes}}$ New, S:Old $\frac{\text{No}}{\text{No}}$ New, W:Add, Z:Discontinued, F:Interchangeable by set, K:Q'ty Change

Copyright (C) YANMAR CO., LTD. All RightsReserved.

Fig.128. QUICK COUPLER(HYD. OIL PIPING)(2)

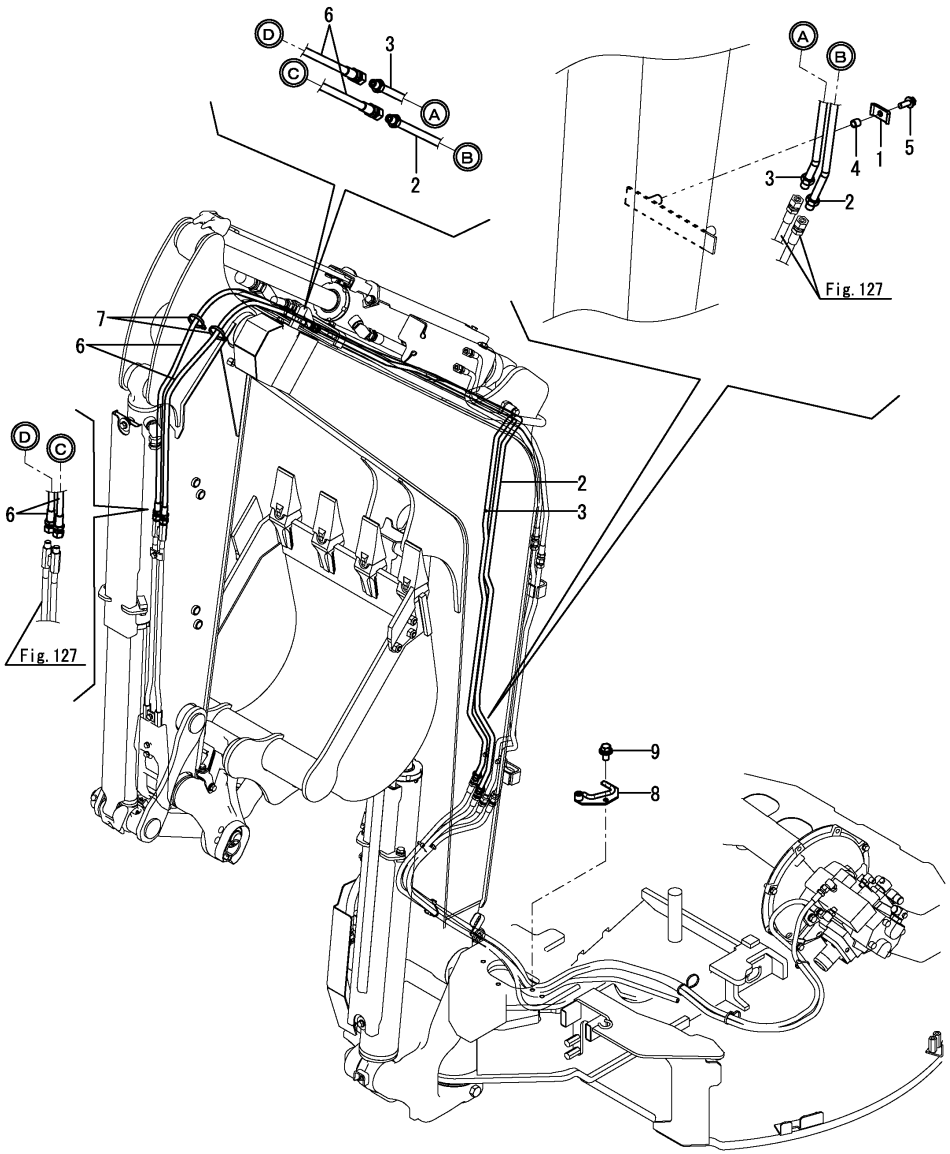

(A)=VIO35-6A P(US) (D)=
(B)=VIO35-6A C(US) (E)=
(C)= (F)=

No.	Lev.	Parts No.	Description	Q'ty (A)	(B)	(C)	(D)	(E)	(F)	I	R
1	1	172110-76170	PLATE	1	1						
2	1	172B03-76550	TUBE ASSY	1	1						
3	1	172B03-76570	TUBE ASSY	1	1						
4	1	172137-76580	COLLAR	1	1						
5	1	26014-080252	BOLT, M8X 25	1	1						
6	1	172B03-79030	HOSE, H604BB104K	2	2						
7	1	172122-79930	CLAMP, HOSE	2	2						
7-1	1	172122-79890	CLAMP, HOSE	2	2					N	
	(A=M61142)	(B=M61142)									
8	1	172B03-77710	GUIDE ASSY, HOSE	1	1						
9	1	26014-100202	BOLT, M10X 20	1	1						

N:Old $\frac{\text{Yes}}{\text{No}}$ New, Q:Old $\frac{\text{No}}{\text{Yes}}$ New, R:Old $\frac{\text{Yes}}{\text{Yes}}$ New, S:Old $\frac{\text{No}}{\text{No}}$ New, W:Add, Z:Discontinued, F:Interchangeable by set, K:Q'ty Change

Copyright (C) YANMAR CO., LTD. All RightsReserved.

Fig.129. QUICK COUPLER(BODY)

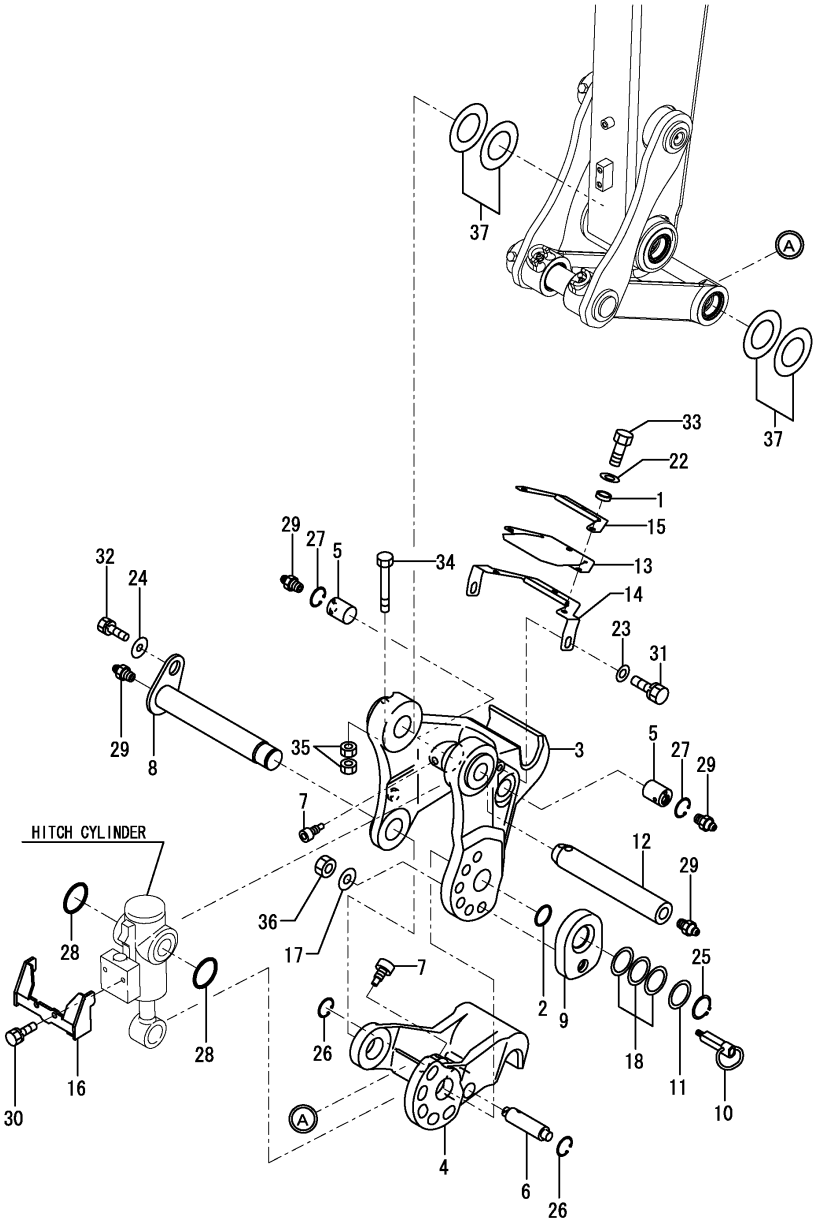

(A)=VIO35-6A P(US)
(B)=VIO35-6A C(US)
(C)=
(D)=
(E)=
(F)=

No.	Lev.	Parts No.	Description	Q'ty (A)	(B)	(C)	(D)	(E)	(F)	I	R
1	1	172958-17121	COLLAR, 9X4	3	3						
2	1	172124-46200	O-RING	1	1						
3	1	172958-83102-Y	BRACKET	1	1						
4	1	172958-83111-Y	BRACKET	1	1						
5	1	172958-83120	PIN	2	2						
6	1	172958-83131	PIN	1	1						
7	1	172958-83140	BOLT	3	3						
8	1	172958-83150	PIN ASSY	1	1						
9	1	172958-83171-Y	PLATE, LOCK	1	1						
10	1	172958-83183	PIN ASSY, LOCK	1	1						
11	1	172960-83210	COLLAR	1	1						
12	1	172958-83220	PIN	1	1						
13	1	172958-83252	PLATE, RUBBER	1	1						
14	1	172958-83271-Y	GUARD ASSY	1	1						
15	1	172958-83281-Y	GUARD ASSY	1	1						
16	1	172958-83292-Y	COVER, HITCH	1	1						
17	1	172958-83330	WASHER	1	1						
18	1	172141-84601	SHIM	1	1						
22	1	22137-080000	WASHER, 8	3	3						
23	1	22137-100000	WASHER, 10	2	2						
24	1	22157-120000	WASHER, 12	1	1						
25	1	22242-000350	RING, 35	1	1						
26	1	22252-000250	RING, 25	2	2						
27	1	22252-000300	RING, 30	2	2						
28	1	24311-000480	O-RING, 1AP48.0	2	2						
29	1	24761-020000	NIPPLE, GREASE PT1/8	4	4						
30	1	26013-080162	BOLT, M8X 16	2	2						
31	1	26013-100202	BOLT, M10X 20	2	2						
32	1	26013-120302	BOLT, M12X 30	1	1						
33	1	26116-080202	BOLT, M8X 20 PLATED	3	3						
34	1	26116-100802	BOLT, M10X 80 PLATED	1	1						
35	1	26716-100002	NUT, M10	2	2						
36	1	26756-060002	NUT, LOCK M6	1	1						
37	1	933171-29751	SHIM SET	2	2						

N:Old $\xleftarrow[\text{No}]{\text{Yes}}$ New, Q:Old $\xleftarrow[\text{Yes}]{\text{No}}$ New, R:Old $\xleftarrow[\text{Yes}]{\text{Yes}}$ New, S:Old $\xleftarrow[\text{No}]{\text{No}}$ New, W:Add, Z:Discontinued, F:Interchangeable by set, K:Q'ty Change

Copyright (C) YANMAR CO., LTD. All RightsReserved.

Fig.130. BOOM BRACKET

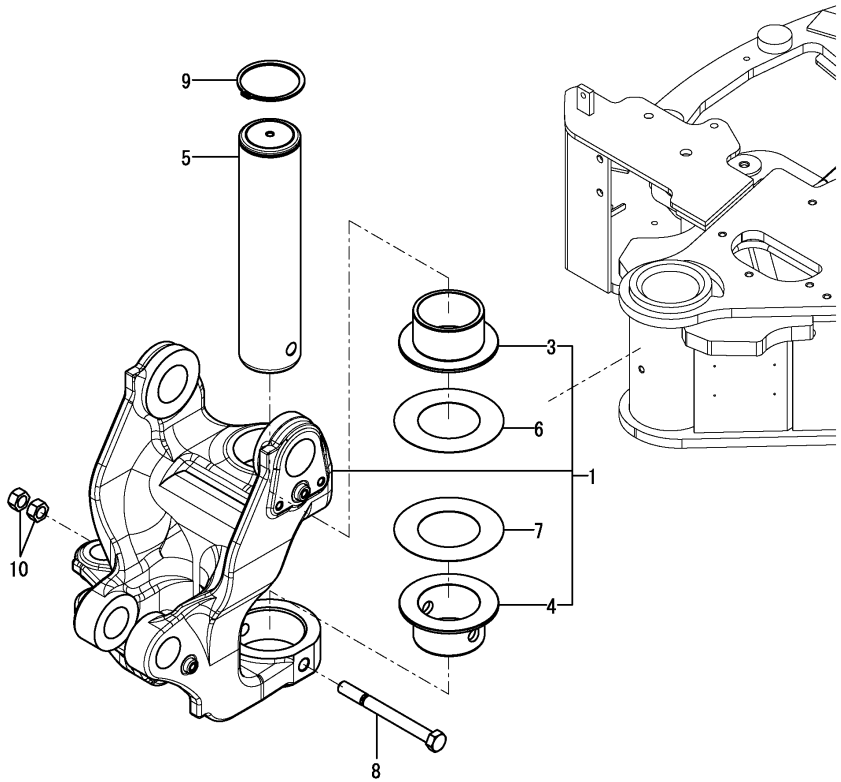

(A)=VIO35-6A P(US) (D)=
(B)=VIO35-6A C(US) (E)=
(C)= (F)=

No.	Lev.	Parts No.	Description	Q'ty (A)	(B)	(C)	(D)	(E)	(F)	I	R
1	1	172B03-82300	BRACKET ASSY,BOOM	1	1						
3	2	172B03-82320	BUSH,90X105 A	1	1						
4	2	172B03-82330	BUSH,90X105 B	1	1						
5	1	172B03-82350	PIN ASSY,90X396	1	1						
6	1	172455-83450	SHIM, 90X160X0.5	1	1						
6-1	1	172B04-82380	SHIM, 90X150X0.5	1	1					N	
	(A=MZZZZZ)	(B=MZZZZZ)									
7	1	172455-83460	SHIM, 90X160X0.8	1	1						
7-1	1	172B04-82390	SHIM,90X150X0.8	1	1					N	
	(A=MZZZZZ)	(B=MZZZZZ)									
8	1	172455-83480	BOLT 18X190	1	1						
9	1	22242-000900	RING, 90	1	1						
10	1	26716-180002	NUT, M18	2	2						

N:Old $\frac{\text{Yes}}{\text{No}}$ New, Q:Old $\frac{\text{No}}{\text{Yes}}$ New, R:Old $\frac{\text{Yes}}{\text{Yes}}$ New, S:Old $\frac{\text{No}}{\text{No}}$ New, W:Add, Z:Discontinued, F:Interchangeable by set, K:Q'ty Change

Copyright (C) YANMAR CO., LTD. All RightsReserved.

Fig.131. BOOM

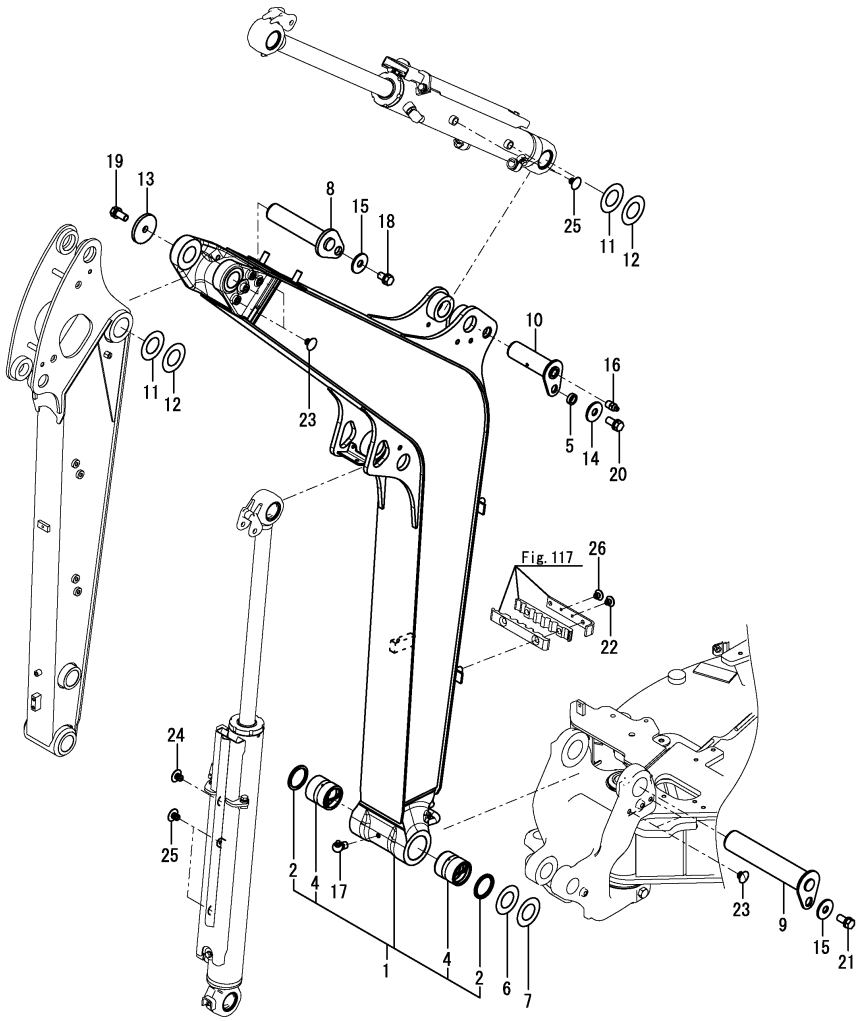

(A)=VIO35-6A P(US)
(B)=VIO35-6A C(US)
(C)=
(D)=
(E)=
(F)=

No.	Lev.	Parts No.	Description	Q'ty (A)	(B)	(C)	(D)	(E)	(F)	I	R
1	1	172B03-81100	BOOM ASSY	1	1						1
2	2	172020-10620	SEAL, DUST	2	2						
4	2	172460-81400	BUSH	2	2						
4A	1	172437-03461	LABEL, BOOM	2	2						2
5	1	172164-81670	SPACER	1	1						
6	1	172175-81700	SHIM	1	1						
7	1	172175-81710	SHIM	1	1						
8	1	172B03-81780	PIN ASSY,50X219	1	1						
9	1	172B03-81800	PIN ASSY, 60X310	1	1						
10	1	172B03-81820	PIN ASSY,50X158 A	1	1						
11	1	172165-82520	SHIM	2	2						
12	1	172165-82530	SHIM	2	2						
13	1	172146-82910	SPACER	1	1						
14	1	22157-120000	WASHER, 12	1	1						
15	1	22157-120000	WASHER, 12	2	2						
16	1	24761-020000	NIPPLE, GREASE PT1/8	1	1						
17	1	24761-040000	NIPPLE, GREASE B	1	1						
18	1	26013-120202	BOLT, M12X 20	1	1						
19	1	26013-120252	BOLT, M12X 25	1	1						
20	1	26013-120252	BOLT, M12X 25	1	1						
21	1	26013-120252	BOLT, M12X 25	1	1						
22	1	172444-17660	CLIP, TREE	2	2						
23	1	172176-68210	CLIP, TREE	4	4						
24	1	172183-81160	CLIP, TREE	1	1						
25	1	172183-81160	CLIP, TREE	4	4						
26	1	172444-17660	CLIP, TREE	1	1						3

Remarks
(1)Attach the No.4A label to this part.
(2)Label is not illustrated.
(3)Not applied for quick coupler specification.

N:Old $\xleftarrow[\text{No}]{\text{Yes}}$ New, Q:Old $\xleftarrow[\text{Yes}]{\text{No}}$ New, R:Old $\xleftarrow[\text{Yes}]{\text{Yes}}$ New, S:Old $\xleftarrow[\text{No}]{\text{No}}$ New, W:Add, Z:Discontinued, F:Interchangeable by set, K:Q'ty Change

Copyright (C) YANMAR CO., LTD. All RightsReserved.

Fig.132. ARM

(A)=VIO35-6A P(US)
(B)=VIO35-6A C(US)
(C)=
(D)=
(E)=
(F)=

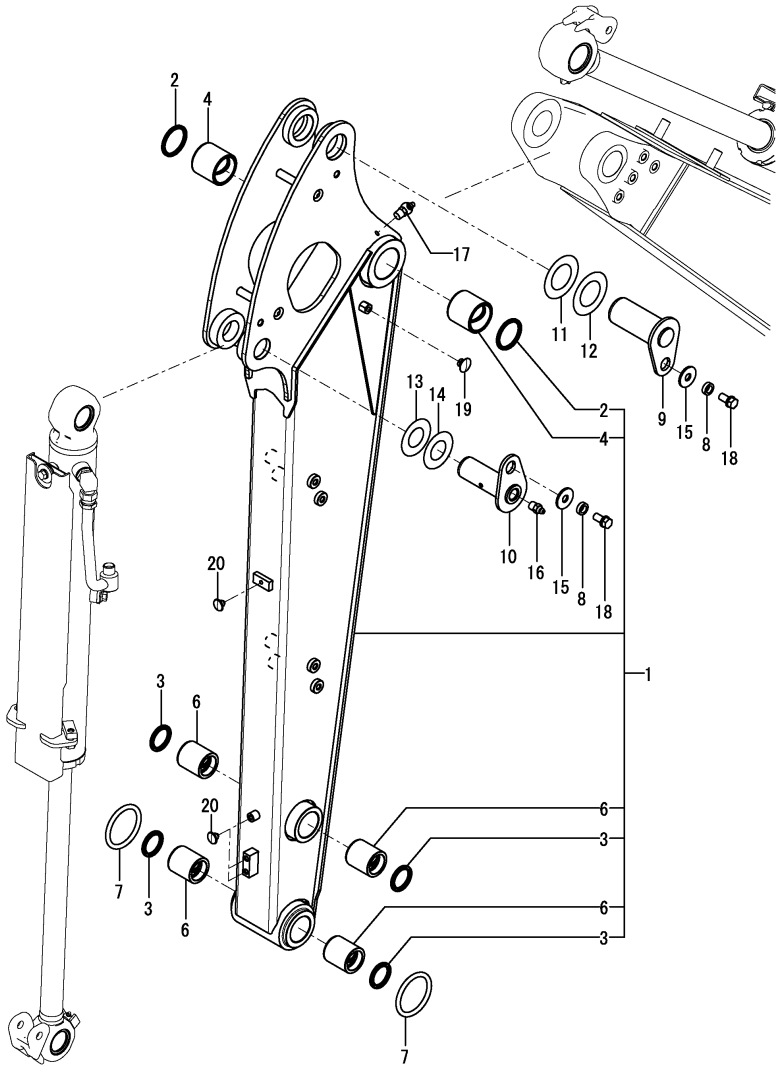

No.	Lev.	Parts No.	Description	Q'ty (A)	(B)	(C)	(D)	(E)	(F)	I	R
1	1	172B03-81500	ARM ASSY, 1370	1	1						1
2	2	172448-54120	SEAL, DUST	2	2						
3	2	172168-81270	SEAL, DUST	4	4						
4	2	172444-81310	BUSH, PIN	2	2						
6	2	172458-81630	BUSH	4	4						
6A	1	172472-03261	LABEL, FINGER	1	1						2
6B	1	172472-03330	LABEL, LOCK PIN	1	1						2
7	1	172142-81620	O-RING	2	2						
8	1	172164-81670	SPACER	2	2						
9	1	172B03-81871	PIN ASSY,50X114	1	1						
10	1	172B03-81920	PIN ASSY,40X114	1	1						
11	1	172165-82520	SHIM	1	1						
12	1	172165-82530	SHIM	1	1						
13	1	172165-82580	SHIM	1	1						
14	1	172165-82590	SHIM	1	1						
15	1	22157-120000	WASHER, 12	2	2						
16	1	24761-020000	NIPPLE, GREASE PT1/8	1	1						
17	1	24761-040000	NIPPLE, GREASE B	1	1						
18	1	26013-120252	BOLT, M12X 25	2	2						
19	1	172183-81160	CLIP, TREE	1	1						
20	1	172444-17660	CLIP, TREE	4	4						3

Remarks
(1)Attach the No.6A & 6B label to this part.
(2)Label is not illustrated.
(3)Not applied for quick coupler specification.

N:Old $\frac{\text{Yes}}{\text{No}}$ New, Q:Old $\frac{\text{No}}{\text{Yes}}$ New, R:Old $\frac{\text{Yes}}{\text{Yes}}$ New, S:Old $\frac{\text{No}}{\text{No}}$ New, W:Add, Z:Discontinued, F:Interchangeable by set, K:Q'ty Change

Copyright (C) YANMAR CO., LTD. All RightsReserved.

Fig.219. (132A)ARM(THUMB BRACKET SPEC.)

(A)=VIO35-6A P(US)
(B)=VIO35-6A C(US)
(C)=
(D)=
(E)=
(F)=

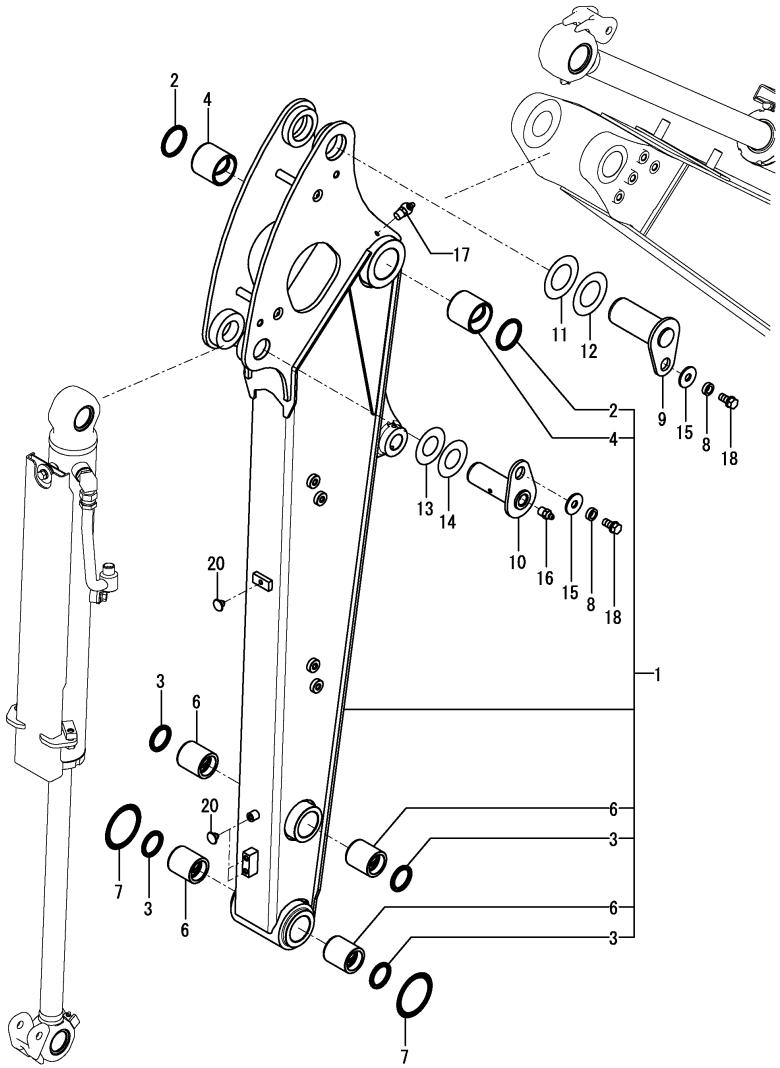

No.	Lev.	Parts No.	Description	Q'ty (A)	(B)	(C)	(D)	(E)	(F)	I	R
1	1	172B03-81470	ARM ASSY,1370 THUMB	1	1						1
2	2	172448-54120	SEAL, DUST	2	2						
3	2	172168-81270	SEAL, DUST	4	4						
4	2	172444-81310	BUSH, PIN	2	2						
6	2	172458-81630	BUSH	4	4						
6A	1	172472-03261	LABEL, FINGER	1	1						2
6B	1	172472-03330	LABEL, LOCK PIN	1	1						2
7	1	172142-81620	O-RING	2	2						
8	1	172164-81670	SPACER	2	2						
9	1	172B03-81871	PIN ASSY,50X114	1	1						
10	1	172B03-81920	PIN ASSY,40X114	1	1						
11	1	172165-82520	SHIM	1	1						
12	1	172165-82530	SHIM	1	1						
13	1	172165-82580	SHIM	1	1						
14	1	172165-82590	SHIM	1	1						
15	1	22157-120000	WASHER, 12	2	2						
16	1	24761-020000	NIPPLE, GREASE PT1/8	1	1						
17	1	24761-040000	NIPPLE, GREASE B	1	1						
18	1	26013-120252	BOLT, M12X 25	2	2						
20	1	172444-17660	CLIP, TREE	4	4						3

Remarks
(1)Attach the No.6A & 6B label to this part.
(2)Label is not illustrated.
(3)Not applied for quick coupler specification.

N:Old $\xleftrightarrow[\text{No}]{\text{Yes}}$ New, Q:Old $\xleftrightarrow[\text{Yes}]{\text{No}}$ New, R:Old $\xleftrightarrow[\text{Yes}]{\text{Yes}}$ New, S:Old $\xleftrightarrow[\text{No}]{\text{No}}$ New, W:Add, Z:Discontinued, F:Interchangeable by set, K:Q'ty Change

Copyright (C) YANMAR CO., LTD. All RightsReserved.

Fig.133. BUCKET ARM & LINK

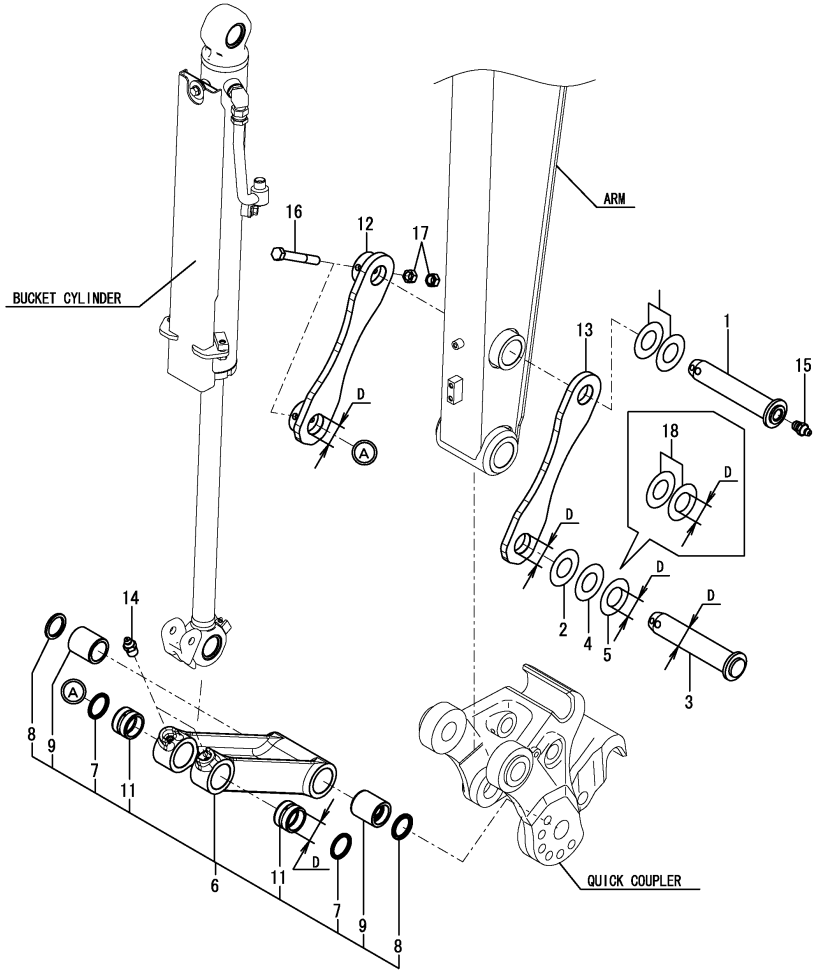

(A)=VIO35-6A P(US) (D)=
(B)=VIO35-6A C(US) (E)=
(C)= (F)=

No.	Lev.	Parts No.	Description	Q'ty (A)	(B)	(C)	(D)	(E)	(F)	I	R
1	1	172B03-81851	PIN ASSY,38X182 P	1	1						
2	1	172A25-81900	SHIM	1	1					Z	1
	(A=M60549)	(B=M60549)									
3	1	172B03-81901	PIN ASSY,40X182	1	1						
3-1	1	172B03-81902	PIN ASSY,38X182 P A	1	1					S	1
	(A=M60549)	(B=M60549)									
4	1	172165-82580	SHIM	1	1					Z	1
	(A=M60549)	(B=M60549)									
5	1	172165-82590	SHIM	1	1					Z	1
	(A=M60549)	(B=M60549)									
6	1	172B03-82600	LINK ASSY,BUCKET	1	1						
6-1	1	172B03-82601	LINK ASSY,BUCKET	1	1					S	1
	(A=M60549)	(B=M60549)									
7	2	172448-72650	SEAL, DUST	4	4						
7-1	2	172168-81270	SEAL, DUST	4	4					S	1
	(A=M60549)	(B=M60549)									
8	2	172168-81270	SEAL, DUST	2	2						
9	2	172458-81630	BUSH	2	2						
11	2	172B03-82620	BUSH, 40X50X33.5	2	2						
11-1	2	172B03-82621	BUSH, 38X50X33.5	2	2					S	1
	(A=M60549)	(B=M60549)									
12	1	172B03-82651	PLATE ASSY,BUC ARM R	1	1						
12-1	1	172458-82600-Y	ARM, BUCKET	1	1					S	1
	(A=M60549)	(B=M60549)									
13	1	172B03-82661	PLATE,BUCKET ARM	1	1						
13-1	1	172164-81820-Y	ARM, BUCKET	1	1					S	1
	(A=M60549)	(B=M60549)									
14	1	24761-020000	NIPPLE, GREASE PT1/8	2	2						
15	1	24761-020000	NIPPLE, GREASE PT1/8	1	1						
16	1	26116-100752	BOLT, M10X 75 PLATED	2	2						
17	1	26716-100002	NUT, M10	4	4						
18	1	933171-29751	SHIM SET	2	2						1

Remarks
(1)D=No.2, 3, 4, 5, 6, 7, 11, 12 & 13 : 40mm,
No.3-1, 6-1, 7-1, 11-1, 12-1, 13-1 & 18 : 38mm.
Following machine is finished with remodeling at the time of factory shipment.
M60519, M60540, M60543, M60546.

N:Old $\overset{\text{Yes}}{\underset{\text{No}}{\leftrightarrows}}$ New, Q:Old $\overset{\text{No}}{\underset{\text{Yes}}{\leftrightarrows}}$ New, R:Old $\overset{\text{Yes}}{\underset{\text{Yes}}{\leftrightarrows}}$ New, S:Old $\overset{\text{No}}{\underset{\text{No}}{\leftrightarrows}}$ New, W:Add, Z:Discontinued, F:Interchangeable by set, K:Q'ty Change

Copyright (C) YANMAR CO., LTD. All RightsReserved.

Fig.153. (133A)BUCKET PIN(QUICK COUPLER SPEC.)

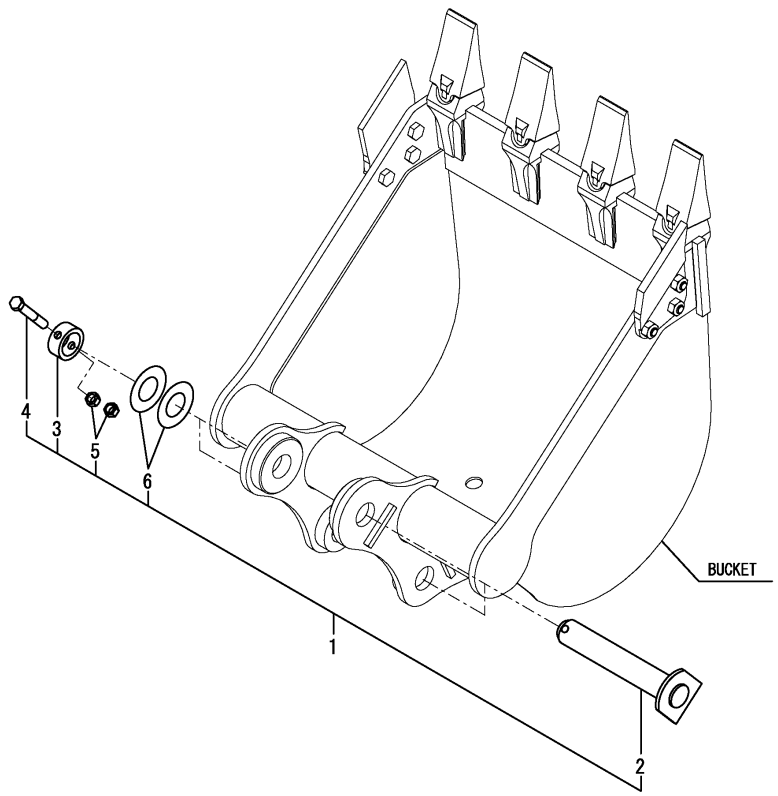

(A)=VIO35-6A P(US)
(B)=VIO35-6A C(US)
(C)=
(D)=
(E)=
(F)=

No.	Lev.	Parts No.	Description	Q'ty (A)	(B)	(C)	(D)	(E)	(F)	I	R
1	1	172958-81590	PIN KIT, BUCKET	2	2						
2	2	172958-81600	PIN ASSY	2	2						
3	2	172164-81700	COLLAR	2	2						
4	2	26116-100652	BOLT, M10X 65 PLATED	2	2						
5	2	26716-100002	NUT, M10	4	4						
6	2	933171-29751	SHIM SET	2	2						

N:Old $\frac{\text{Yes}}{\text{No}}$ New, Q:Old $\frac{\text{No}}{\text{Yes}}$ New, R:Old $\frac{\text{Yes}}{\text{Yes}}$ New, S:Old $\frac{\text{No}}{\text{No}}$ New, W:Add, Z:Discontinued, F:Interchangeable by set, K:Q'ty Change

Copyright (C) YANMAR CO., LTD. All RightsReserved.

Fig.185. (133B)BUCKET

(A)=VIO35-6A P(US)
(B)=VIO35-6A C(US)
(C)=
(D)=
(E)=
(F)=

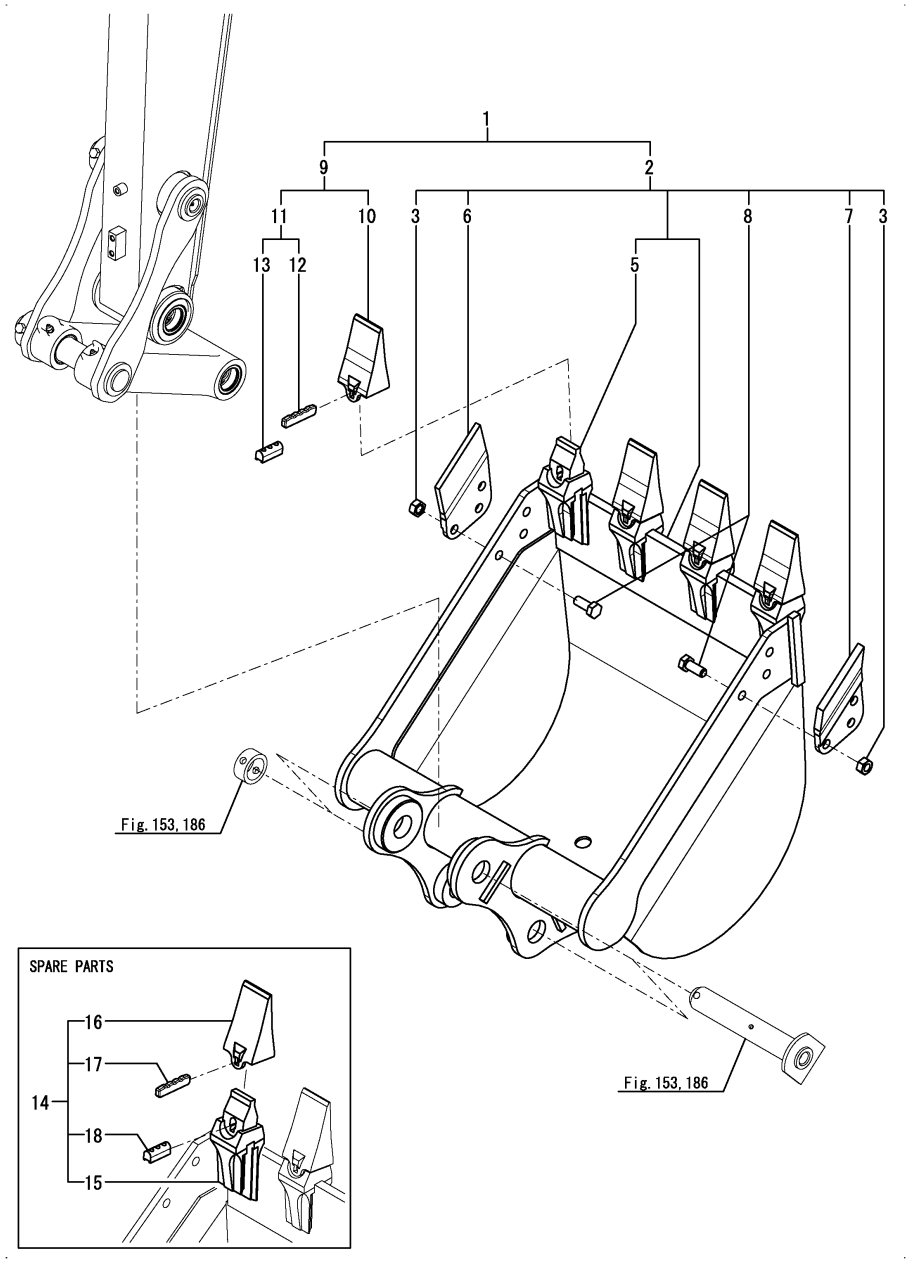

No.	Lev.	Parts No.	Description	Q'ty (A)	(B)	(C)	(D)	(E)	(F)	I	R
1	1	172B03-82400	BUCKET ASSY, 590S	1	1						
2	2	172B03-82410	BUCKET ASSY, 590S	1	1						
3	3	172B03-82180	NUT, M14X1.5	6	6						
5	4	172458-82231	ADAPTER	4	4						
6	3	172B03-82810	CUTTER, SIDE R	1	1						
7	3	172B03-82860	CUTTER, SIDE L	1	1						
8	3	26082-140352	BOLT, 14 X 35	6	6						
9	2	172448-82950	TOOTH KIT, POINT	4	4						
10	3	172448-82570	TOOTH, POINT	4	4						
11	3	172448-82960	PIN ASSY, LOCK	4	4						
12	4	172448-82580	PIN, LOCK	4	4						
13	4	172448-82590	RUBBER, PIN	4	4						
14	1	772458-82231	TOOTH ASSY	4	4						1
15	2	172458-82231	ADAPTER	4	4						
16	2	172448-82570	TOOTH, POINT	4	4						
17	2	172448-82580	PIN, LOCK	4	4						
18	2	172448-82590	RUBBER, PIN	4	4						

Remarks
(1)Spare parts.

N:Old $\frac{\text{Yes}}{\text{No}}$ New, Q:Old $\frac{\text{No}}{\text{Yes}}$ New, R:Old $\frac{\text{Yes}}{\text{Yes}}$ New, S:Old $\frac{\text{No}}{\text{No}}$ New, W:Add, Z:Discontinued, F:Interchangeable by set, K:Q'ty Change

Copyright (C) YANMAR CO., LTD. All RightsReserved.

Fig.186. (133C)BUCKET PIN

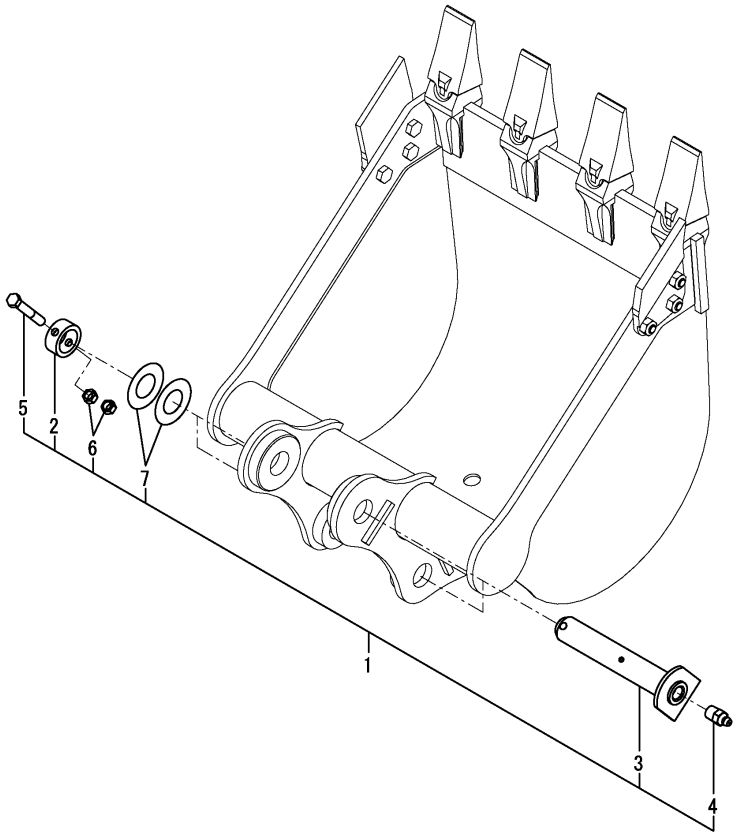

(A)=VIO35-6A P(US)
(B)=VIO35-6A C(US)
(C)=
(D)=
(E)=
(F)=

No.	Lev.	Parts No.	Description	Q'ty (A)	(B)	(C)	(D)	(E)	(F)	I	R
1	1	172B03-08790	PIN KIT,BUCKET	2	2						
2	2	172164-81700	COLLAR	2	2						
3	2	172B03-81970	PIN ASSY,38X229	2	2						
4	2	24761-020000	NIPPLE, GREASE	2	2						
5	2	26116-100652	BOLT	2	2						
6	2	26716-100002	NUT	4	4						
7	2	933171-29751	SHIM SET	2	2						

N:Old $\frac{\text{Yes}}{\text{No}}$ New, Q:Old $\frac{\text{No}}{\text{Yes}}$ New, R:Old $\frac{\text{Yes}}{\text{Yes}}$ New, S:Old $\frac{\text{No}}{\text{No}}$ New, W:Add, Z:Discontinued, F:Interchangeable by set, K:Q'ty Change

Copyright (C) YANMAR CO., LTD. All RightsReserved.

Fig.134. BLADE

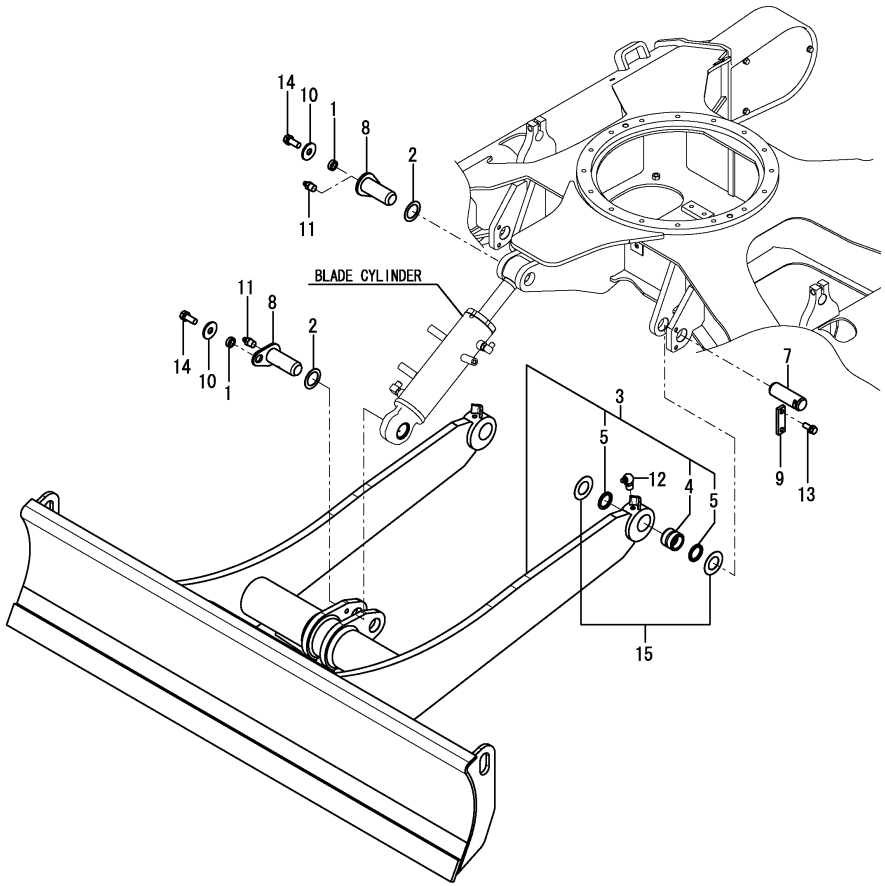

(A)=VIO35-6A P(US)
(B)=VIO35-6A C(US)
(C)=
(D)=
(E)=
(F)=

No.	Lev.	Parts No.	Description	Q'ty (A)	(B)	(C)	(D)	(E)	(F)	I	R
1	1	172164-81670	SPACER	2	2						
2	1	172112-87860	SHIM	2	2						
3	1	172B03-94100	BLADE ASSY, 1740	1	1						
4	2	172168-72240	BUSH	2	2						
5	2	172168-81270	SEAL, DUST	4	4						
7	1	172422-94210	PIN	2	2						
8	1	172142-94241	PIN	2	2						
9	1	172124-94310-5	PLATE, LOCK	2	2						
10	1	22157-120000	WASHER, 12	2	2						
11	1	24761-020000	NIPPLE, GREASE PT1/8	2	2						
12	1	24761-040000	NIPPLE, GREASE B	2	2						
13	1	26013-100252	BOLT, M10X 25	4	4						
14	1	26013-120302	BOLT, M12X 30	2	2						
15	1	933171-29751	SHIM SET	2	2						

Remarks
* Not applied for angle blade specification.

N:Old $\frac{\text{Yes}}{\text{No}}$ New, Q:Old $\frac{\text{No}}{\text{Yes}}$ New, R:Old $\frac{\text{Yes}}{\text{Yes}}$ New, S:Old $\frac{\text{No}}{\text{No}}$ New, W:Add, Z:Discontinued, F:Interchangeable by set, K:Q'ty Change

Copyright (C) YANMAR CO., LTD. All RightsReserved.

Fig.187. (134A)BLADE(ANGLE BLADE SPEC.)

(A)=VIO35-6A P(US)
(B)=VIO35-6A C(US)
(C)=
(D)=
(E)=
(F)=

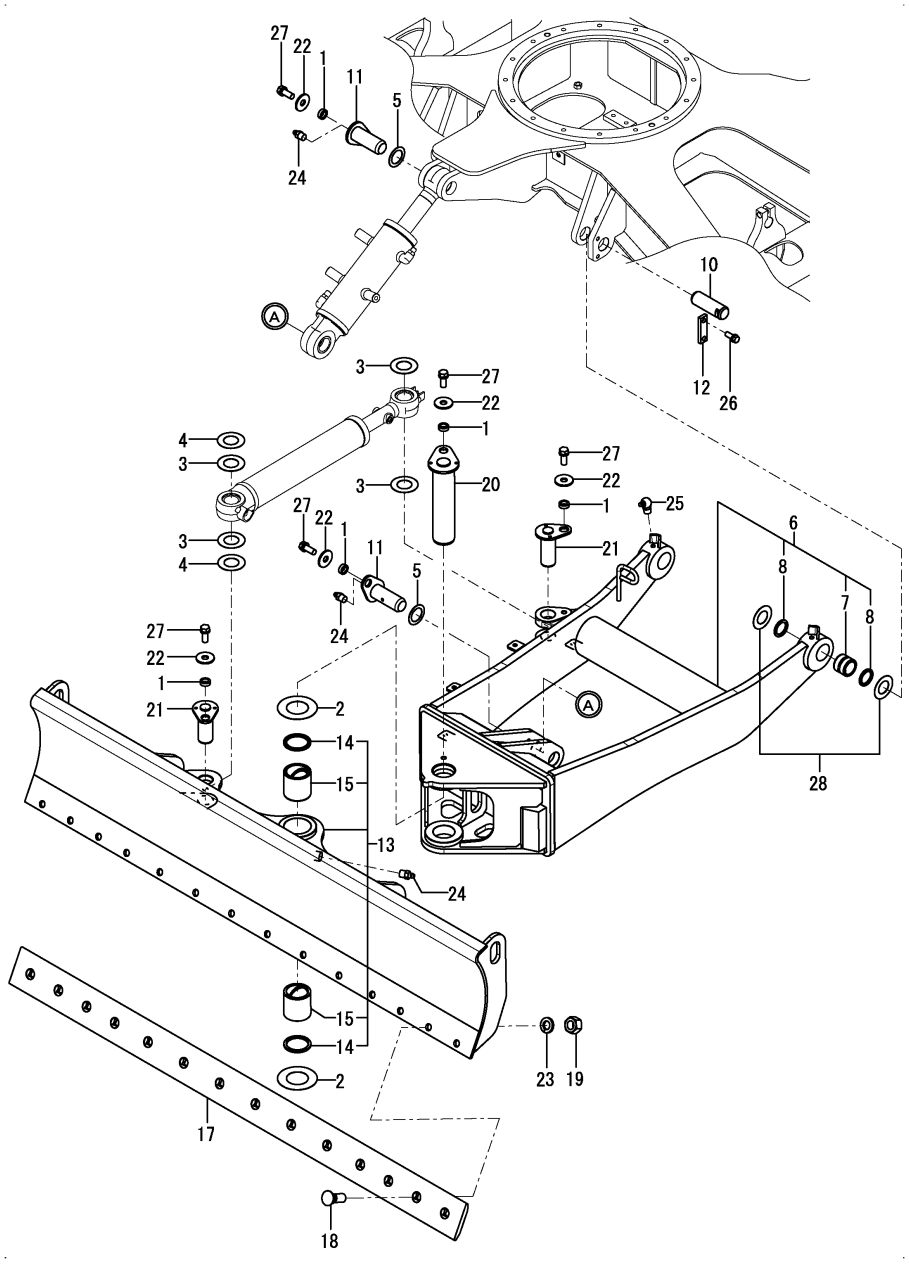

No.	Lev.	Parts No.	Description	Q'ty (A)	(B)	(C)	(D)	(E)	(F)	I	R
1	1	172164-81670	SPACER	5	5						
2	1	172175-81700	SHIM	2	2						
3	1	172A25-81900	SHIM	4	4						
4	1	172165-82580	SHIM	2	2						
5	1	172112-87860	SHIM	2	2						
6	1	172B03-94200	BLADE ASSY,ANGLE R	1	1						
7	2	172143-72331	BUSH 38 50	2	2						
8	2	172168-81270	SEAL, DUST	4	4						
10	1	172422-94210	PIN	2	2						
11	1	172142-94241	PIN	2	2						
12	1	172124-94310-5	PLATE, LOCK	2	2						
13	1	172B03-94500	BLADE ASSY,ANGLE F	1	1						
14	2	172020-10620	SEAL, DUST	2	2						
15	2	172445-81360	BUSH	2	2						
17	1	172B03-94800	PLATE,CUTTING	1	1						
18	1	172A79-94810	BOLT,5/8-11 UNC	14	14						
19	1	172A79-94820	NUT, 5/8-11, UNC	14	14						
20	1	172A79-95101	PIN 60X253 ASSY	1	1						
21	1	172A79-95301	PIN 40X102 ASSY	2	2						
22	1	22157-120000	WASHER, 12	5	5						
23	1	22217-160000	WASHER, SPRING 16	14	14						
24	1	24761-020000	NIPPLE, GREASE PT1/8	3	3						
25	1	24761-040000	NIPPLE, GREASE B	2	2						
26	1	26013-120252	BOLT, M12X 25	4	4						
27	1	26013-120302	BOLT, M12X 30	5	5						
28	1	933171-29751	SHIM SET	2	2						

Remarks
* Exclusive figure for angle blade specification.

N:Old ◄Yes/No► New, Q:Old ◄No/Yes► New, R:Old ◄Yes/Yes► New, S:Old ◄No/No► New, W:Add, Z:Discontinued, F:Interchangeable by set, K:Q'ty Change

Copyright (C) YANMAR CO., LTD. All RightsReserved.

Fig.135. LABEL KIT(FOR CANADA)(OPTIONAL)

(A)=VIO35-6A P(US) (D)=
(B)=VIO35-6A C(US) (E)=
(C)= (F)=

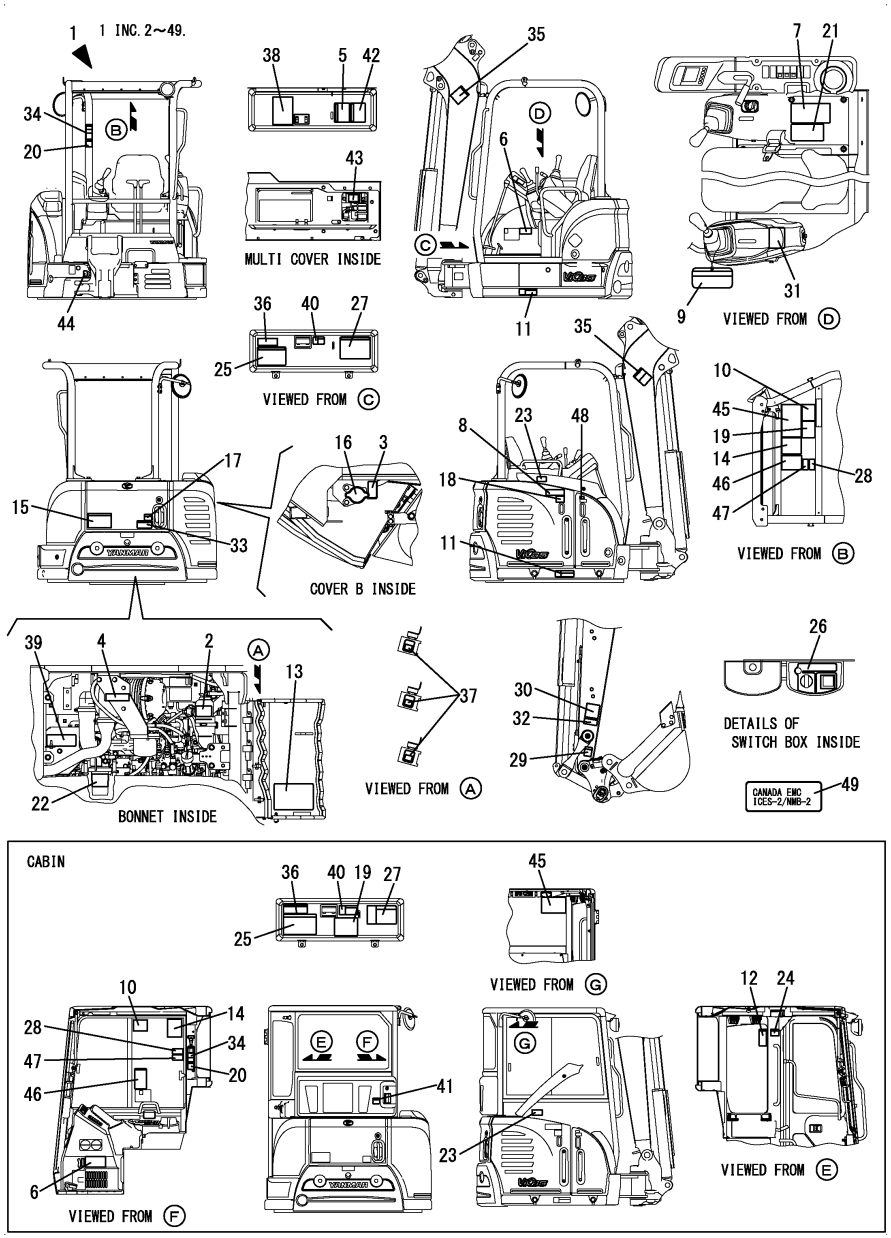

No.	Lev.	Parts No.	Description	Q'ty (A)	(B)	(C)	(D)	(E)	(F)	I	R
1	1	172B03-03020	LABEL KIT,CA VIO35-6	1	1					W	
	(A=*2012.12.)	(B=*2012.12.)									
2	2	172A37-03150	LABEL,SUB-TANK CA	1	1						
3	2	172A37-03160	LABEL,ANTI-FREEZE CA	1	1						
4	2	172A37-03180	LABEL J, AIR CLEANER	1	1						
5	2	172A37-03220	LAVEL,ADJUST CRAWLER	1	1						
6	2	172A37-03231	LABEL,MANUAL CA.	1	1						
7	2	172A37-03241	LABEL,SLOPE CA.	1	1						
8	2	172A37-03250	LABEL,RESERVOIR CA	1	1						
9	2	172469-03261	TAG ASSY, SERVICING	1	1						
10	2	172A37-03271	LABEL,TRANSPORT CA.	1	1						
11	2	172A37-03280	LABEL,GREASE CYL CA	2	2						
12	2	172478-03290	LABEL,F/W LOWER	1	1						1
13	2	172A37-03290	LABEL,BATTERY CA	1	1						
14	2	172A37-03300	LABEL,NEWTRAL CA	1	1						
15	2	172A37-03310	LABEL,SWING AREA CA	1	1						
16	2	172469-03320	LABEL,RADIATOR CAP	1	1						
17	2	172A37-03330	LABEL,ENGINE COVER	1	1						
18	2	172469-03360	LABEL,OIL	1	1						
19	2	172A37-03360	LABEL,STERRING CA	1	1						
20	2	172A37-03370	LABEL,ROPS CA	1	1						
21	2	172A37-03400	LABEL,LEVER LOCK CA	1	1						
22	2	172A07-03410	LABEL,WATER DRAIN	1	1						
23	2	172A37-03410	LABEL,RADIATOR CA	1	1						
24	2	172A37-03420	LABEL,WINDOW CA	1	1						1
25	2	172A37-03430	LABEL,2 WAY CA	1	1						
26	2	172469-03480	LABEL,SWITCH	1	1						
27	2	172A37-03500	LABEL,SUPPORT CA	1	1						
28	2	172A37-03520	LABEL,PIN CA	1	1						
29	2	172A37-03530	LABEL,FINGER CA	1	1						
30	2	172469-03540	LABEL,OPERATION PIN	1	1						
31	2	172A47-03651	LABEL,PTO CA	1	1						
32	2	172A37-03680	LABEL,LOCK PIN CA	1	1						
33	2	172A37-03710	LABEL,ENGROOM CA	1	1						
34	2	172A37-03720	LABEL,SEAT BELT CA	1	1						
35	2	172A37-03730	LABEL,BOOM CA	2	2						
36	2	172B03-04500	LABEL, SPEC CA	1	1						
37	2	172B03-04510	LABEL,FUSE CA	1	1						
38	2	172B03-04520	LABEL,OIL/WATER CA	1	1						
39	2	172B03-04530	LABEL,SILENCER CA	1	1						
40	2	172B03-04540	LABEL,SEAT TILT UP	1	1						
41	2	172B03-04550	LABEL,WARNING A/C CA	1	1						1
42	2	172B03-04560	LABEL,GREASING CA	1	1						
43	2	172B03-04570	LABEL,FUSE BOX CA	1	1						
44	2	172B03-04580	LABEL, GREASE CA	1	1						
45	2	172B03-04590	LABEL,LIFT CA	1	1						
46	2	172B03-04600	LABEL,WARNING HITCH	1	1						
47	2	172B03-04610	LABEL,SAND CA	1	1						
48	2	129942-07761	LABEL, FUEL OIL CAUT	1	1						
49	2	172B03-03230	LABEL,EMC	1	1					W	
	(A=*2016.10.)	(B=*2016.10.)									

N:Old $\overset{\text{Yes}}{\underset{\text{No}}{\leftrightarrow}}$ New, Q:Old $\overset{\text{No}}{\underset{\text{Yes}}{\leftrightarrow}}$ New, R:Old $\overset{\text{Yes}}{\underset{\text{Yes}}{\leftrightarrow}}$ New, S:Old $\overset{\text{No}}{\underset{\text{No}}{\leftrightarrow}}$ New, W:Add, Z:Discontinued, F:Interchangeable by set, K:Q'ty Change

Remarks
* Not applied for angle blade specification.
(1)Cabin specification.

Copyright (C) YANMAR CO., LTD. All RightsReserved.

Fig.188. (135A)LABEL KIT(FOR CANADA)(ANGLE BLADE SPEC.)(OPTIONAL)

(A)=VIO35-6A P(US)
(B)=VIO35-6A C(US)
(C)=
(D)=
(E)=
(F)=

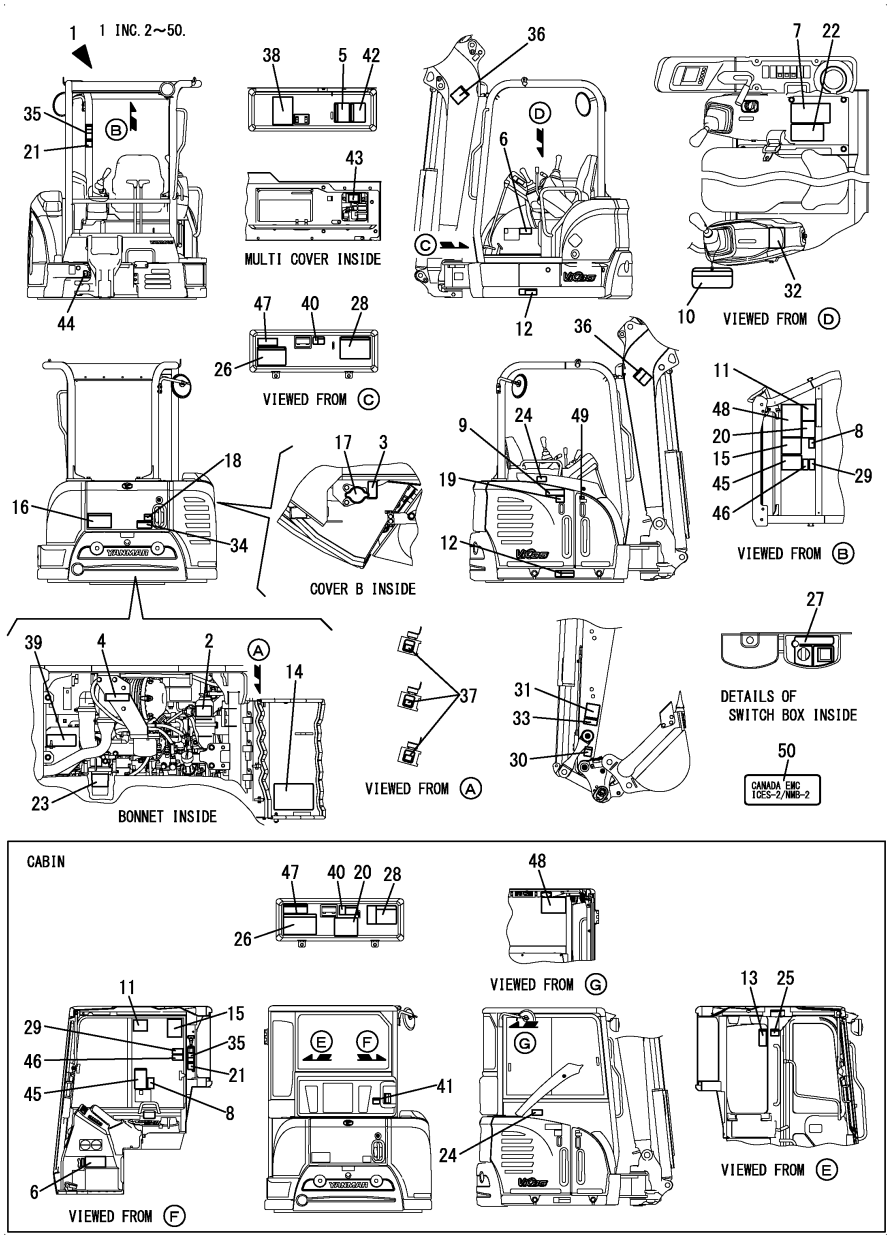

No.	Lev.	Parts No.	Description	Q'ty (A)	(B)	(C)	(D)	(E)	(F)	I	R
1	1	172B03-03030	LABEL KIT,CA ANGLE	1	1						
2	2	172A37-03150	LABEL,SUB-TANK CA	1	1						
3	2	172A37-03160	LABEL,ANTI-FREEZE CA	1	1						
4	2	172A37-03180	LABEL J, AIR CLEANER	1	1						
5	2	172A37-03220	LAVEL,ADJUST CRAWLER	1	1						
6	2	172A37-03231	LABEL,MANUAL CA.	1	1						
7	2	172A37-03241	LABEL,SLOPE CA.	1	1						
8	2	172A79-03240	LABEL,WARNING ANG CA	1	1						
9	2	172A37-03250	LABEL,RESERVOIR CA	1	1						
10	2	172469-03261	TAG ASSY, SERVICING	1	1						
11	2	172A37-03271	LABEL,TRANSPORT CA.	1	1						
12	2	172A37-03280	LABEL,GREASE CYL CA	2	2						
13	2	172478-03290	LABEL,F/W LOWER	1	1						1
14	2	172A37-03290	LABEL,BATTERY CA	1	1						
15	2	172A37-03300	LABEL,NEWTRAL CA	1	1						
16	2	172A37-03310	LABEL,SWING AREA CA	1	1						
17	2	172469-03320	LABEL,RADIATOR CAP	1	1						
18	2	172A37-03330	LABEL,ENGINE COVER	1	1						
19	2	172469-03360	LABEL,OIL	1	1						
20	2	172A37-03360	LABEL,STERRING CA	1	1						
21	2	172A37-03370	LABEL,ROPS CA	1	1						
22	2	172A37-03400	LABEL,LEVER LOCK CA	1	1						
23	2	172A07-03410	LABEL,WATER DRAIN	1	1						
24	2	172A37-03410	LABEL,RADIATOR CA	1	1						
25	2	172A37-03420	LABEL,WINDOW CA	1	1						1
26	2	172A37-03430	LABEL,2 WAY CA	1	1						
27	2	172469-03480	LABEL,SWITCH	1	1						
28	2	172A37-03500	LABEL,SUPPORT CA	1	1						
29	2	172A37-03520	LABEL,PIN CA	1	1						
30	2	172A37-03530	LABEL,FINGER CA	1	1						
31	2	172469-03540	LABEL,OPERATION PIN	1	1						
32	2	172A47-03651	LABEL,PTO CA	1	1						
33	2	172A37-03680	LABEL,LOCK PIN CA	1	1						
34	2	172A37-03710	LABEL,ENGROOM CA	1	1						
35	2	172A37-03720	LABEL,SEAT BELT CA	1	1						
36	2	172A37-03730	LABEL,BOOM CA	2	2						
37	2	172B03-04510	LABEL,FUSE CA	1	1						
38	2	172B03-04520	LABEL,OIL/WATER CA	1	1						
39	2	172B03-04530	LABEL,SILENCER CA	1	1						
40	2	172B03-04540	LABEL,SEAT TILT UP	1	1						
41	2	172B03-04550	LABEL,WARNING A/C CA	1	1						1
42	2	172B03-04560	LABEL,GREASING CA	1	1						
43	2	172B03-04570	LABEL,FUSE BOX CA	1	1						
44	2	172B03-04580	LABEL, GREASE CA	1	1						
45	2	172B03-04600	LABEL,WARNING HITCH	1	1						
46	2	172B03-04610	LABEL,SAND CA	1	1						
47	2	172B03-04630	LABEL,SPEC US ANG CA	1	1						
48	2	172B03-04640	LABEL,LIFT ANGLE CA	1	1						
49	2	129942-07761	LABEL, FUEL OIL CAUT	1	1						
50	2	172B03-03230	LABEL,EMC	1	1					W	
	(A=*2016.10.)		(B=*2016.10.)								

N:Old $\frac{\text{Yes}}{\text{No}}$ New, Q:Old $\frac{\text{No}}{\text{Yes}}$ New, R:Old $\frac{\text{Yes}}{\text{Yes}}$ New, S:Old $\frac{\text{No}}{\text{No}}$ New, W:Add, Z:Discontinued, F:Interchangeable by set, K:Q'ty Change

Remarks
* Exclusive figure for angle blade specification.
(1)Cabin specification.

Copyright (C) YANMAR CO., LTD. All RightsReserved.

Fig.136. REMOTE CONTROLLER KIT(OPTIONAL)

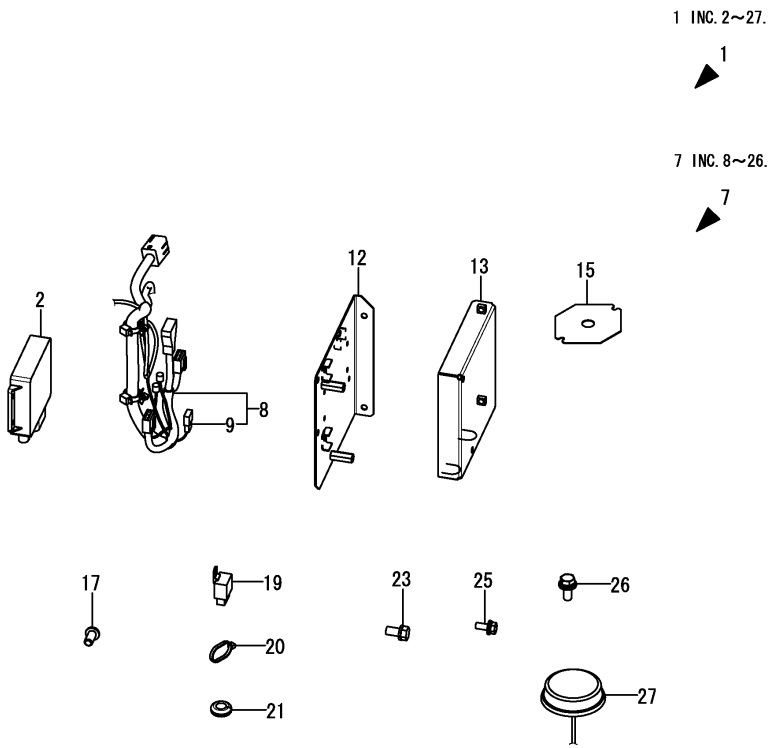

(A)=VIO35-6A P(US) (D)=
(B)=VIO35-6A C(US) (E)=
(C)= (F)=

No.	Lev.	Parts No.	Description	Q'ty (A)	(B)	(C)	(D)	(E)	(F)	I	R
1	1	172B03-08310	CONTROLLER KIT,RM EX	1	1					W	
	(A=MXXXXX)	(B=MXXXXX)									
2	2	1RF001-00021	CONTROLLER,MOBILE,O	1	1						
7	2	172B03-16000	PARTS ASSY, GPS	1	1						
8	3	172B03-16620	HARNESS ASSY,GPS	1	1						
9	4	172648-16600	DIODE, 1.5-2P	1	1						
12	3	172B03-17831	BRACKET ASSY, GPS	1	1						
13	3	172B03-17851	COVER ASSY, GPS	1	1						
15	3	172B03-17980	PLATE, ANTENNA	1	1						
17	3	172186-45840	BOLT	4	4						
19	3	198461-52950	RELAY, CA TYPE C	2	2						
20	3	194202-56460	BAND, 200	2	2						
21	3	172137-62970	GROMMET	2	2						
23	3	26013-080162	BOLT, M8X 16	3	3						
25	3	26014-060162	BOLT, M6X 16	6	6						
26	3	26014-060162	BOLT, M6X 16	2	2						
27	2	1RF001-93000	ANTENNA, MOBILE	1	1						

N:Old $\xleftarrow[\text{No}]{\text{Yes}}$ New, Q:Old $\xleftarrow[\text{Yes}]{\text{No}}$ New, R:Old $\xleftarrow[\text{Yes}]{\text{Yes}}$ New, S:Old $\xleftarrow[\text{No}]{\text{No}}$ New, W:Add, Z:Discontinued, F:Interchangeable by set, K:Q'ty Change

Copyright (C) YANMAR CO., LTD. All RightsReserved.

Fig.137. P.T.O. OVER LOAD VALVE KIT(OPTIONAL)

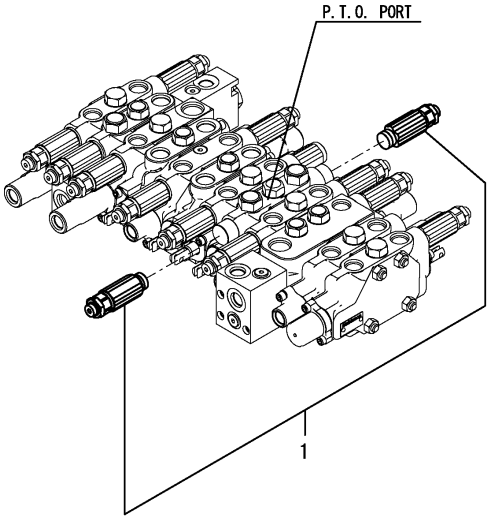

(A)=VIO35-6A P(US)
(B)=VIO35-6A C(US)
(C)=
(D)=
(E)=
(F)=

No.	Lev.	Parts No.	Description	Q'ty (A)	(B)	(C)	(D)	(E)	(F)	I	R
1	1 (A=MXXXXX)	172B03-08590 (B=MXXXXX)	VALVE ASSY,PTO O L	1	1					W	

N:Old ⇄(Yes/No) New, Q:Old ⇄(No/Yes) New, R:Old ⇄(Yes/Yes) New, S:Old ⇄(No/No) New, W:Add, Z:Discontinued, F:Interchangeable by set, K:Q'ty Change

Copyright (C) YANMAR CO., LTD. All RightsReserved.

Fig.138. ADDITIONAL WEIGHT KIT(OPTIONAL)

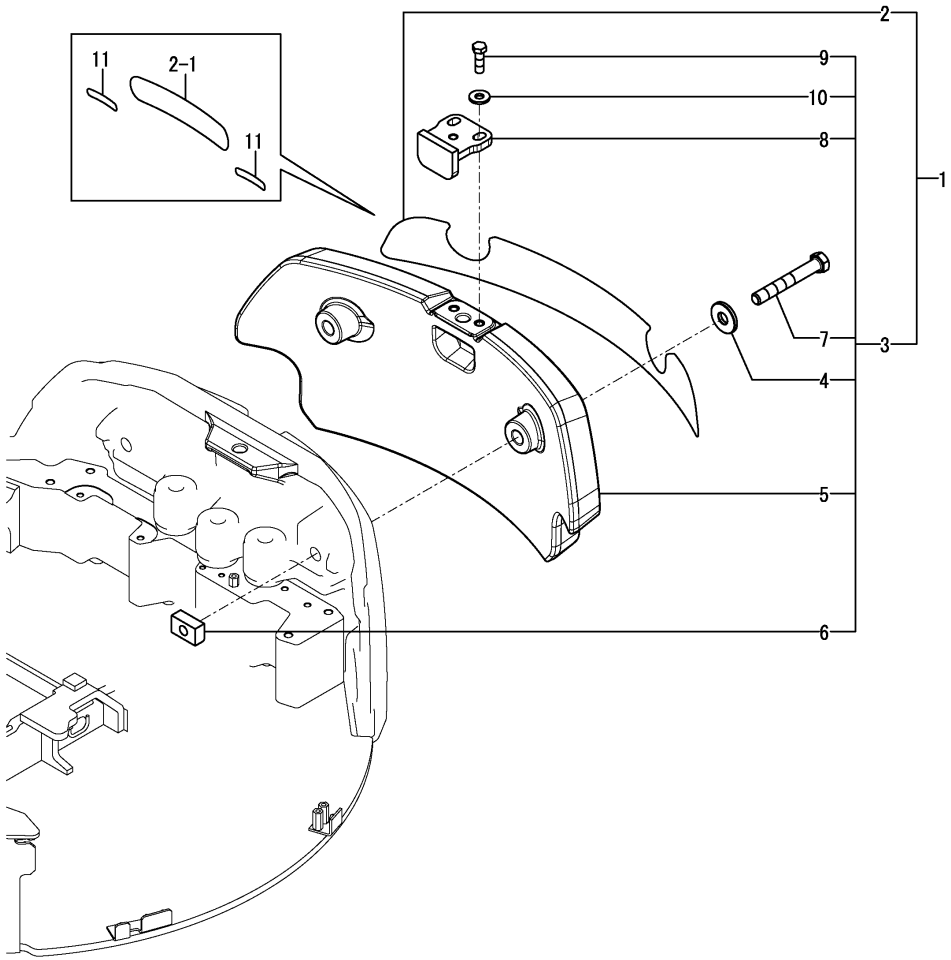

(A)=VIO35-6A P(US) (D)=
(B)=VIO35-6A C(US) (E)=
(C)= (F)=

No.	Lev.	Parts No.	Description	Q'ty (A)	(B)	(C)	(D)	(E)	(F)	I	R
1	1	172B03-08680	WEIGHT KIT,ADD	1	1					W	
	(A=*2012.10.)	(B=*2012.10.)									
1-1	1	172B03-08681	WEIGHT KIT,ADD D	1	1					S	
	(A=MAF001)	(B=MAF001)									
2	2	172B03-03160	LABEL,REAR	1	1						
2-1	2	172B03-04790	LABEL,REAR 30	1	1					S	
	(A=MAF001)	(B=MAF001)									
3	2	172B03-09200	WEIGHT ASSY, ADD	1	1						
4	3	172187-53321	WASHER	2	2						
5	3	172B03-53320	WEIGHT, ADD 150	1	1						
6	3	172A46-53360	NUT	2	2						
7	3	172A48-53371	BOLT	2	2						
8	3	172B03-53410	BRACKET ASSY,WEIGHT	1	1						
9	3	26116-160502	BOLT, M16X 50 PLATED	2	2						
10	3	933147-08501	WASHER	2	2						
11	2	172B04-03980	LABEL, REFLECTOR M	2	2					W	
	(A=MAF001)	(B=MAF001)									

N:Old $\frac{\text{Yes}}{\text{No}}$ New, Q:Old $\frac{\text{No}}{\text{Yes}}$ New, R:Old $\frac{\text{Yes}}{\text{Yes}}$ New, S:Old $\frac{\text{No}}{\text{No}}$ New, W:Add, Z:Discontinued, F:Interchangeable by set, K:Q'ty Change

Copyright (C) YANMAR CO., LTD. All RightsReserved.

Fig.139. BUCKET LINK WITH HOOK(OPTIONAL)

(A)=VIO35-6A P(US) (D)=
(B)=VIO35-6A C(US) (E)=
(C)= (F)=

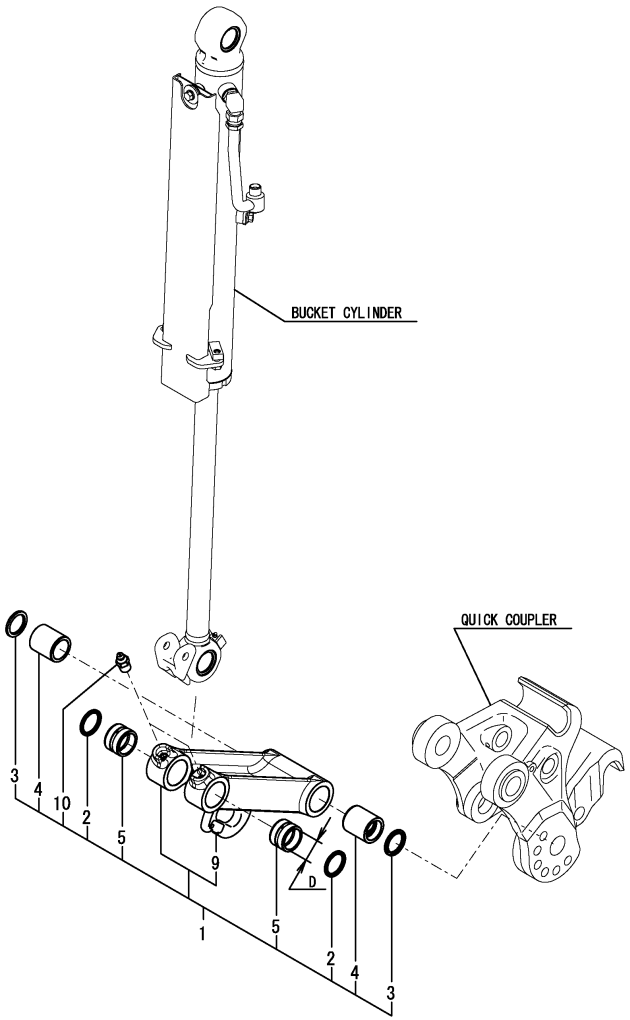

No.	Lev.	Parts No.	Description	Q'ty (A)	(B)	(C)	(D)	(E)	(F)	I	R
1	1	172B03-84600	LINK ASSY, BUCKET F	1	1					W	
	(A=MXXXXX)	(B=MXXXXX)									
1-1	1	172B03-84601	LINK ASSY, BUCKET F	1	1					S	1
	(A=M60549)	(B=M60549)									
2	2	172448-72650	SEAL, DUST	4	4						
2-1	2	172168-81270	SEAL, DUST	4	4					S	1
	(A=M60549)	(B=M60549)									
3	2	172168-81270	SEAL, DUST	2	2						
4	2	172458-81630	BUSH	2	2						
5	2	172B03-82620	BUSH, 40X50X33.5	2	2						
5-1	2	172B03-82621	BUSH, 38X50X33.5	2	2					S	1
	(A=M60549)	(B=M60549)									
9	4	172141-84710	STOPPER	1	1						
10	2	24761-020000	NIPPLE, GREASE PT1/8	2	2						

Remarks
(1)D=No.1, 2 & 5 : 40mm, No.1-1, 2-1 & 5-1 : 38mm.
Following machine is finished with remodeling at the time of factory shipment.
M60519, M60540, M60543, M60546.

N:Old $\xleftrightarrow[\text{No}]{\text{Yes}}$ New, Q:Old $\xleftrightarrow[\text{Yes}]{\text{No}}$ New, R:Old $\xleftrightarrow[\text{Yes}]{\text{Yes}}$ New, S:Old $\xleftrightarrow[\text{No}]{\text{No}}$ New, W:Add, Z:Discontinued, F:Interchangeable by set, K:Q'ty Change

Copyright (C) YANMAR CO., LTD. All RightsReserved.

Fig.151. RADIO KIT(OPTIONAL)

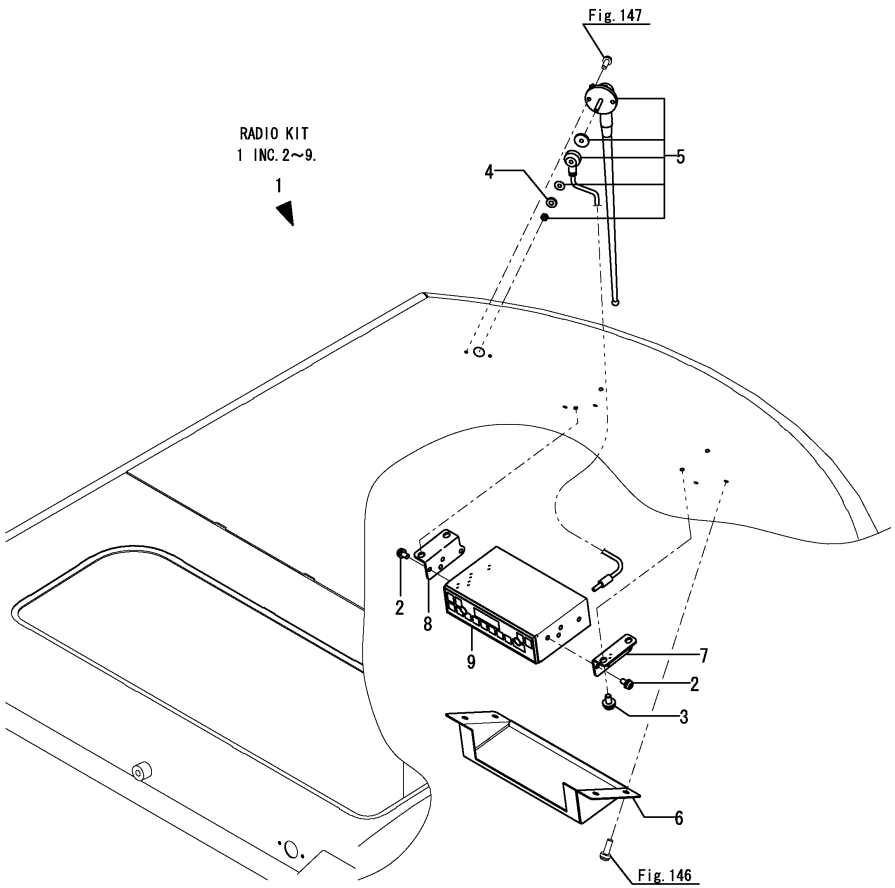

(A)=VIO35-6A P(US)
(B)=VIO35-6A C(US)
(C)=
(D)=
(E)=
(F)=

No.	Lev.	Parts No.	Description	Q'ty (A)	(B)	(C)	(D)	(E)	(F)	I	R
1	1	172B02-08170	RADIO KIT,RADIO		1						
2	2	172B02-67010	SCREW, SEMS 5X10		4						
3	2	172B02-67160	BOLT, SEMS 6X16		4						
4	2	172B02-67550	WASHER, 6		1						
5	2	172B02-67900	ANTENNA, RADIO		1						
6	2	172B02-67920	COVER,RADIO		1						
7	2	172B02-67930	BRACKET, RADIO L		1						
8	2	172B02-67940	BRACKET, RADIO R		1						
9	2	172A89-69860	RADIO ASSY,JP		1						

Remarks
* Cabin assy is shown in Fig.86.

N:Old $\xleftrightarrow[\text{No}]{\text{Yes}}$ New, Q:Old $\xleftrightarrow[\text{Yes}]{\text{No}}$ New, R:Old $\xleftrightarrow[\text{Yes}]{\text{Yes}}$ New, S:Old $\xleftrightarrow[\text{No}]{\text{No}}$ New, W:Add, Z:Discontinued, F:Interchangeable by set, K:Q'ty Change

Copyright (C) YANMAR CO., LTD. All RightsReserved.

Fig.152. RADIO KIT(OPTIONAL)(WITHOUT RADIO)

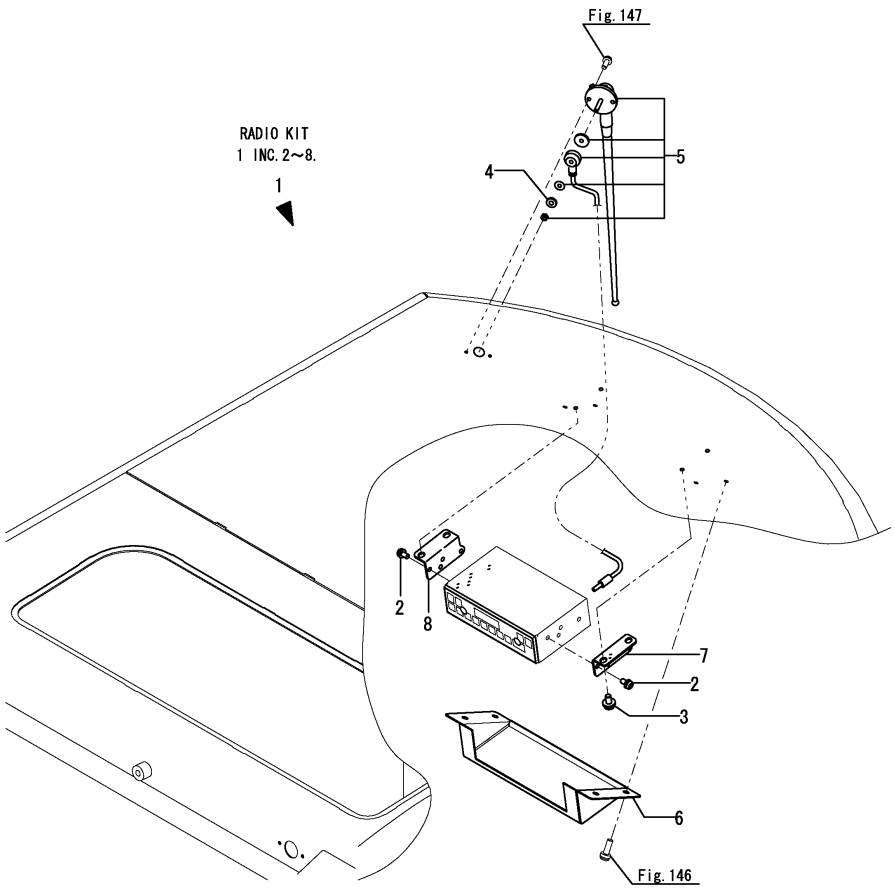

(A)=VIO35-6A P(US)
(B)=VIO35-6A C(US)
(C)=
(D)=
(E)=
(F)=

No.	Lev.	Parts No.	Description	Q'ty (A)	(B)	(C)	(D)	(E)	(F)	I	R
1	1	172B02-08180	RADIO KIT, ANTENNA		1						
2	2	172B02-67010	SCREW, SEMS 5X10		4						
3	2	172B02-67160	BOLT, SEMS 6X16		4						
4	2	172B02-67550	WASHER, 6		1						
5	2	172B02-67900	ANTENNA, RADIO		1						
6	2	172B02-67920	COVER,RADIO		1						
7	2	172B02-67930	BRACKET, RADIO L		1						
8	2	172B02-67940	BRACKET, RADIO R		1						

Remarks
* Cabin assy is shown in Fig.86.

N:Old $\xleftrightarrow[\text{No}]{\text{Yes}}$ New, Q:Old $\xleftrightarrow[\text{Yes}]{\text{No}}$ New, R:Old $\xleftrightarrow[\text{Yes}]{\text{Yes}}$ New, S:Old $\xleftrightarrow[\text{No}]{\text{No}}$ New, W:Add, Z:Discontinued, F:Interchangeable by set, K:Q'ty Change

Copyright (C) YANMAR CO., LTD. All RightsReserved.

Parts No. Index

Parts No.	Fig. No.	Ref. No.
106990-44660	14	27
114110-07761	1	16
	199	16
119802-55710	15	23
119802-55810	15	27
120147-44810	79	2
121120-13580	7	15
121250-49121	12	6
121256-44600	12	16
124450-44550	12	15
124766-59050	12	19
		20
	14	28
	15	28
		29
		30
		31
		32
		33
128300-77920	146	26
129004-55612	15	20
129100-55690	15	22
129263-44510	12	14
129612-52100	15	19
129927-44900	107	2
129927-77920	17	14
	190	16
129942-07761	135	48
	188	49
172020-10620	131	2
	187	14
172068-28490	198	2
		10
172110-45050	198	6
		14
172110-76170	127	6
	128	1
172112-75780	107	18
172112-77361	116	11
	119	14
	180	13
172112-87860	134	2
	187	5
172116-76381	183	7 -1
172122-13381	12	8
172122-17190	82	1
172122-46590	46	13
	47	20
172122-55061	107	29
172122-57620	56	5

Parts No.	Fig. No.	Ref. No.
172122-57630	56	2
172122-57640	56	3
172122-70350	85	3
	86	8
	92	28
	160	3
	164	24
172122-70460	92	6
	164	5
172122-70630	93	13
172122-73430	92	41
	164	37
172122-73470	92	51
	93	14
	164	46
172122-73480	85	39
		40
	86	46
	160	38
		39
172122-79890	114	3
	128	7 -1
172122-79930	122	29
	128	7
	184	31
172122-79940	72	9
172123-76121	90	27
	111	3
	116	7
	120	3
	121	3
	122	11
	162	18
	178	5
	180	7
	181	3
	182	3
	183	10
	184	11
	194	24
172124-13230-5	10	7
172124-17640	33	3
	37	3
172124-46200	46	11
	47	18
	129	2
172124-46340	46	12
172124-70380	93	8
172124-70390	93	9
		10

Parts No.	Fig. No.	Ref. No.
172124-76160	110	12
	177	12
172124-94310-5	134	9
	187	12
172125-03951	2	9
	8	8 A
172126-11510	19	1
	25	1
		1 -1
	37	1
	122	31
		32
	157	1
	158	1
	184	14
		15
172137-16560	26	2
	28	1
	29	1
	31	1
	33	1
	34	2
172137-46210	24	17
	66	2
		3
		4
	67	1
		2
		3
	72	7
172137-62970	136	21
172137-66230	57	11
		16
172137-73700	107	3
172137-73860	94	5
172137-76100	122	4
	183	8
	184	4
172137-76110	107	19
172137-76580	127	9
	128	4
172141-17150	27	2
172141-29111	39	1
172141-29112	39	1 -1
172141-37320	42	4
	189	3
172141-41340	46	1
172141-41360	47	9
	49	2
		7

Parts No.	Fig. No.	Ref. No.
172141-41360	159	3
		8
172141-41370	46	3
		6
	47	3
	51	3
172141-50890	52	4
172141-70020	92	22
	164	18
172141-70030	92	23
	164	19
172141-70041	92	24
	164	20
172141-70100	92	25
	164	21
172141-70110	92	26
	164	22
172141-70230	92	27
	164	23
172141-72250	89	19
	90	13
172141-72420	89	20
172141-73090	89	33
172141-73770	107	6
172141-76090	118	7
172141-76181	90	28
	91	27
	127	7
172141-76220	115	5
	179	1
	183	13
172141-76900	87	34
	88	39
	89	35
	161	38
	191	29
	192	33
	193	27
	196	33
172141-76920	110	21
	177	21
172141-76990	179	4
172141-84601	129	18
172141-84710	139	9
172142-62301	6	5
	13	10
172142-72260	91	12
172142-73800	94	10
172142-76940-Y	119	11
172142-76950-Y	119	13

Parts No. Index

Parts No.	Fig. No.	Ref. No.
172142-81620	132	7
	219	7
172142-94241	134	8
	187	11
172143-72331	187	7
172146-72270	87	32
	88	19
	161	18
172146-82910	131	13
172147-70280	93	5
172147-70331	93	7
172147-70390	93	11
172147-70500	92	7
		30
	93	12
	164	26
172148-70301	85	2
	86	7
	92	4
	93	6
	160	2
	164	3
172148-70340	92	5
	164	4
172148-73870	94	12
172151-72540	88	34
	161	31
172151-72591	88	23
		29
	161	22
		28
172151-72870	90	26
172151-73400	102	2
	103	2
172151-73420	102	3
	103	3
172151-73450	102	4
	103	4
172151-76050	122	3
	183	6
	184	3
172156-72400	126	2
172156-72770	126	4
172157-45990	47	17
172157-58830	104	1
	174	1
172162-14200	14	4
172162-61850	23	9
172162-76131	183	11
172162-76181	111	6

Parts No.	Fig. No.	Ref. No.
172162-76181	178	8
172164-19310	34	13
172164-66480	68	10
172164-66640	68	11
172164-76131	110	6
	177	6
172164-81670	87	43
	131	5
	132	8
	134	1
	187	1
	191	41
	219	8
172164-81700	153	3
	186	2
172164-81820-Y	133	13 -1
172165-18601	34	6
172165-18630	34	8
172165-18670	34	9
172165-46340	47	19
172165-47550	51	11
172165-62800	19	20
		21
	28	8
172165-62830	68	22
		26
172165-71200	84	4
172165-72310	89	22
		28
	90	20
172165-76580	119	9
172165-76590	108	6
172165-76860	85	50
	86	1
	160	49
172165-82520	87	46
	131	11
	132	11
	191	44
	219	11
172165-82530	87	47
	131	12
	132	12
	191	45
	219	12
172165-82580	90	36
	132	13
	133	4
	187	4
	194	31

Parts No.	Fig. No.	Ref. No.
172165-82580	219	13
172165-82590	90	37
	132	14
	133	5
	194	32
	219	14
172168-71101-4	84	1
172168-71951	92	10
	164	6
172168-72240	89	28 -1
	134	4
172168-72410	91	15
		19
172168-76370	118	13
172168-81270	89	30 -1
	132	3
	133	7 -1
		8
	134	5
	139	2 -1
		3
	187	8
	219	3
172173-74280	96	38
	98	8
	167	26
	169	8
	205	38
	207	8
	212	26
	214	8
172173-76102	116	3
	122	6
	178	3
	180	3
	184	6
172173-76121	91	26
	116	8
	163	21
	180	8
172175-13110-1	10	4
172175-72550	91	13
172175-73700	107	4
172175-73710	107	5
172175-81700	131	6
	187	2
172175-81710	131	7
172176-07330	6	9
172176-68210	77	2
	131	23

Parts No.	Fig. No.	Ref. No.
172176-73290	85	23
	86	32
	160	23
172176-73560	85	42
	86	48
	160	41
172176-73590	85	43
	86	49
	160	42
172176-73600	85	44
	86	50
	160	43
172176-73690	85	45
	86	51
	160	44
172176-73880	85	46
	86	52
	160	45
172176-73910	85	47
	86	53
	160	46
172176-73930	85	48
	86	54
	160	47
172176-73940	85	49
	86	55
	160	48
172183-03280	3	9
	4	10
	154	9
	155	10
	200	9
	201	9
	202	10
	203	10
172183-16560	33	2
	122	14
	184	16
172183-73670	92	70
	164	76
172183-76200	111	8
	178	10
	183	12
172183-76210	36	11
172183-76250-Y	119	3
172183-81160	131	24
		25
	132	19
172186-45840	136	17
172186-76390	120	8

Parts No. Index

Parts No.	Fig. No.	Ref. No.
172186-76390	121	8
	181	8
	182	8
172187-16110	16	14
172187-45651	47	13
172187-45760	47	14
	48	7
172187-45870	46	9
172187-45880	46	10
172187-53321	54	2
	138	4
172187-61421	58	1
	69	1
	145	2
172187-64900	24	18
	68	8
172187-68060	30	3
172187-73711	107	7
172187-75500	107	17
172187-76200	119	2
172187-76520	119	7
172187-76530-Y	119	8
172187-76690-Y	119	10
172187-76940	118	25
	119	12
172187-78580	127	12
172312-74790	85	12
	86	12
	92	8
		9
	160	12
	164	78
		79
172312-76240	179	2
172312-76250	179	3
172422-37310	42	3
172422-76140	111	4
	178	6
172422-94210	134	7
	187	10
172423-72530	88	36
	161	35
172423-72540	88	37
	161	36
172423-73530	93	16
172425-17630	37	2
172434-61170	61	1 -1B
172434-61200	6	4
	76	2
172437-03242	3	3

Parts No.	Fig. No.	Ref. No.
172437-03242	4	4
	154	3
	155	4
	200	3
	201	3
	202	4
	203	4
172437-03252	3	8
	4	9
	154	8
	155	9
	200	8
	201	8
	202	9
	203	9
172437-03302	3	10
	4	11
	67	13 A
	68	11 A
	154	10
	155	11
	200	10
	201	10
	202	11
	203	11
172437-03312	3	11
	4	12
	69	14 A
	154	11
	155	12
	200	11
	201	11
	202	12
	203	12
172437-03322	1	7
	76	9 A
	199	7
172437-03343	3	12
	4	13
	77	1 A
	144	50 A
	154	12
	155	13
	200	12
	201	12
	202	13
	203	13
172437-03352	1	8
	61	1 A
		4 A

Parts No.	Fig. No.	Ref. No.
172437-03352	199	8
172437-03361	2	7
	13	8 B
172437-03372	3	13
	4	14
	77	1 B
	144	50 B
	154	13
	155	14
	200	13
	201	13
	202	14
	203	14
172437-03381	1	9
	73	6 A
	199	9
172437-03391	3	15
	4	16
	66	7 A
	80	4 A
	154	15
	155	16
	200	15
	201	15
	202	16
	203	16
172437-03402	1	10
	73	6 B
	199	10
172437-03432	3	17
	4	18
	69	11 C
	77	1 C
	154	17
	155	18
	200	17
	201	17
	202	18
	203	18
172437-03441	3	23
	4	26
	77	1 F
	147	45 B
	154	24
	155	27
	200	23
	201	24
	202	26
	203	27
172437-03451	3	20

Parts No.	Fig. No.	Ref. No.
172437-03451	4	21
	77	1 D
	147	45 A
	154	20
	155	21
	200	20
	201	20
	202	21
	203	21
172437-03461	1	12
	131	4 A
	199	12
172437-03471	3	21
	4	22
	69	14 B
	154	21
	155	22
	200	21
	201	21
	202	22
	203	22
172437-03501	1	14
	199	14
172437-03511	1	15
	199	15
172437-03551	4	27
	80	4 B
	155	28
	202	27
	203	28
172437-03601	3	26
	4	33
	69	11 D
	154	27
	155	34
	200	26
	201	27
	202	33
	203	34
172437-03610	2	10
172437-03620	2	11
172437-74711	104	5
	174	5
172437-74720	104	6
	174	6
172438-76460	118	14
172441-37302	42	1
172441-44320	50	1
172444-13210	12	4
172444-13220	12	5

Parts No. Index

Parts No.	Fig. No.	Ref. No.
172444-14130	14	17
172444-14200	14	5
172444-14410	14	25
172444-14450	14	6
172444-14460	14	7
172444-14470	14	8
172444-14480	14	9
172444-14490	14	10
172444-17620	61	4 -1A
172444-17660	66	1
	68	21
	80	5
	131	22
		26
	132	20
	219	20
172444-65190	58	17
172444-73831	94	3
172444-73840	94	4
172444-73880	94	9
172444-76400	108	5
172444-81310	132	4
	219	4
172445-18131	34	5
172445-76153	111	5
	178	7
172445-81360	187	15
172446-62910	68	4
172446-75250	107	9
172447-14160	14	3
172447-17150	17	9
	190	9
172447-73840	94	11
172447-74230	99	17
	170	15
	208	17
	215	15
172448-14670	15	15
172448-54120	87	18
		24
	88	21
		27
	132	2
	161	20
		26
	219	2
172448-65490	57	21
		22
	73	13
172448-72650	89	24

Parts No.	Fig. No.	Ref. No.
172448-72650	89	30
	90	15
		21
	91	16
		20
	133	7
	139	2
172448-82570	185	10
		16
172448-82580	185	12
		17
172448-82590	185	13
		18
172448-82950	185	9
172448-82960	185	11
172450-73330	92	31
	164	27
172450-73350	92	32
	164	28
172450-73360	92	33
	164	29
172450-73370	92	34
	164	30
172450-73380	92	35
	164	31
172450-73390	92	36
	164	32
172450-73400	92	37
	164	33
172450-73410	92	38
	164	34
172450-73420	92	39
	164	35
172450-73430	92	42
	164	38
172450-73440	92	43
	164	39
172450-73450	92	44
	164	40
172450-73460	92	45
	164	41
172450-73470	92	46
	164	42
172450-73501	92	63
	164	68
172450-73510	92	64
	164	69
172450-73551	92	68
	164	72
172450-73751	93	63

Parts No.	Fig. No.	Ref. No.
172450-73830	93	71
172450-73840	93	25
172450-73850	93	26
172450-73860	93	27
172450-73870	93	28
172450-73880	93	29
172450-73890	93	30
172450-73900	93	31
172450-73910	93	32
172450-73920	93	33
172450-73930	93	34
172450-73940	93	35
172450-73950	93	36
172450-73960	93	37
172450-77000	93	38
172450-77030	93	39
172450-77040	93	40
172450-77050	93	41
172450-77070	93	42
172450-77080	93	43
172450-77090	93	44
172450-77110	93	45
172450-77120	93	46
172450-77130	93	47
172450-77140	93	48
172450-77170	93	49
172450-77190	93	50
172450-77220	93	74
172450-77230	93	77
172452-73480	85	41
	86	47
	160	40
172455-17930	32	1
	36	1
172455-29140	93	1
172455-46890	51	10
172455-53331	54	3
172455-61710	70	1
172455-75270	107	10
172455-75290	107	12
172455-75300	107	13
172455-76220	122	12
	184	12
172455-79140	118	28
172455-81380	55	4
172455-83450	130	6
172455-83460	130	7
172455-83480	130	8
172456-53700	23	6
	54	4

Parts No.	Fig. No.	Ref. No.
172456-74290	99	2
172456-74440	96	28 -1
	168	15
	205	4
	213	15
172458-03240	5	4
172458-13120-1	10	6
172458-14203	14	11
172458-14340	14	24
172458-14370	14	14
172458-16550	17	7
	190	7
172458-17700	38	1
172458-37102	40	3
172458-37120	40	6
	41	3
172458-37131	40	7
	41	4
172458-37151	40	10
	41	7
172458-37172	41	8
172458-37500-2	43	1
172458-37570	43	3
172458-37580	43	4
172458-37590	43	5
172458-37700	40	15
	41	15
172458-38201	197	8
		13
172458-38210	197	9
172458-38220	197	10
172458-38230	197	11
172458-45230-1	47	5
172458-45510-1	48	1
172458-45521-1	47	11
172458-45540-1	47	12
172458-50480-2	52	1
172458-50800-2	53	2
172458-50810-2	53	3
172458-57600-2	56	1
172458-63641	122	15
	184	17
172458-65070	69	9 -1
172458-72050	91	3
172458-72260	87	31
172458-72290	87	33
172458-72460	88	30
	161	33
172458-72470	88	31
	161	34

Parts No. Index

Parts No.	Fig. No.	Ref. No.
172458-72740	90	17
	194	6
172458-72741	194	6 -1
172458-73770	92	71
	164	77
172458-74130	97	15
	98	20
	99	19
	101	14
	169	20
	170	2
		17
	173	3
	206	15
	207	20
	208	19
	210	14
	214	20
	215	2
		17
	218	3
172458-74140	97	16
	98	21
	99	20
	101	15
	169	21
	170	3
		18
	173	4
	206	16
	207	21
	208	20
	210	15
	214	21
	215	3
		18
	218	4
172458-74150	96	32
	97	3
	99	21
	100	26
	101	2
		16
	167	20
	168	3
	170	19
	171	3
	172	25
	173	5
	205	32

Parts No.	Fig. No.	Ref. No.
172458-74150	206	3
	208	21
	209	26
	210	2
		16
	212	20
	213	3
	215	19
	216	3
	217	25
	218	5
172458-74160	96	33
	97	4
	99	22
	100	27
	101	3
		17
	167	21
	168	4
	170	20
	171	4
	172	26
	173	6
	205	33
	206	4
	208	22
	209	27
	210	3
		17
	212	21
	213	4
	215	20
	216	4
	217	26
	218	6
172458-74170	97	17
	98	22
	99	23
	101	19
	169	22
	170	4
		21
	206	17
	207	22
	208	23
	210	19
	214	22
	215	4
		21
172458-74230	96	34

Parts No.	Fig. No.	Ref. No.
172458-74230	97	6
	98	5
	99	4
	100	5
		28
	101	6
	167	3
		22
	168	6
	169	5
	171	5
		17
	172	5
		29
	173	7
	205	34
	206	6
	207	5
	208	3
	209	5
		28
	210	6
	212	3
		22
	213	6
	214	5
	216	5
		17
	217	5
		29
	218	7
172458-74240	96	35
	97	7
	99	5
	100	29
	101	7
	167	4
		23
	168	7
	171	6
		18
	172	30
	205	35
	206	7
	208	4
	209	29
	210	7
	212	4
		23
	213	7

Parts No.	Fig. No.	Ref. No.
172458-74240	216	6
		18
	217	30
172458-74250	96	36
	97	8
	99	6
	100	7
		30
	101	8
	167	5
		24
	168	8
	171	7
		19
	172	7
		31
	205	36
	206	8
	208	5
	209	7
		30
	210	8
	212	5
		24
	213	8
	216	7
		19
	217	7
		31
172458-74260	96	37
	97	9
	98	7
	99	7
	100	9
		31
	101	9
	167	6
		25
	168	9
	169	7
	171	8
		20
	172	9
		32
	205	37
	206	9
	207	7
	208	6
	209	9
		31

Parts No. Index

Parts No.	Fig. No.	Ref. No.
172458-74260	210	9
	212	6
		25
	213	9
	214	7
	216	8
		20
	217	9
		32
172458-74290	96	6
	97	18
	98	23
	100	11
	168	18
	169	23
	170	5
	172	11
	205	7
	206	18
	207	23
	209	11
	213	18
	214	23
	215	5
	217	11
172458-74360	96	7
	97	19
	98	24
	100	12
	168	19
	169	24
	170	6
	172	12
	205	8
	206	19
	207	24
	209	12
	213	19
	214	24
	215	6
	217	12
172458-74530	98	13
	169	13
	207	13
	214	13
172458-74540	98	14
	169	14
	207	14
	214	14
172458-74550	98	15

Parts No.	Fig. No.	Ref. No.
172458-74550	169	15
	207	15
	214	15
172458-74630	96	41
	97	11
	99	26
	100	34
	101	10
		21
	167	29
	168	11
	170	24
	171	11
	172	33
	173	13
	205	41
	206	11
	208	26
	209	34
	210	10
		21
	212	29
	213	11
	215	24
	216	11
	217	33
	218	13
172458-74640	96	13
	97	22
	98	27
	100	13
	168	25
	169	27
	170	9
	172	13
	205	14
	206	22
	207	27
	209	13
	213	25
	214	27
	215	9
	217	13
172458-74670	98	16
	100	14
	169	16
	172	14
	207	16
	209	14
	214	16

Parts No.	Fig. No.	Ref. No.
172458-74670	217	14
172458-74710	167	33
	170	29
	171	14
	205	45
	208	31
	209	37
	212	33
	215	29
	216	14
172458-74720	96	1
	167	16
	205	1
	212	16
172458-74730	96	2
	205	2
172458-74910	93	81
172458-76150	110	10
	120	4
	121	4
	177	10
172458-76160	109	10
172458-78571	122	16
	184	18
172458-81630	132	6
	133	9
	139	4
	219	6
172458-82231	185	5
		15
172458-82600-Y	133	12 -1
172459-73740	93	18
172459-73750	93	24
172460-18120	34	4
172460-37750	40	16
	41	16
172460-72941	88	38
	161	37
172460-73111	85	4
	160	4
172460-73121	85	10
	86	9
	160	10
172460-73130	85	13
	86	10
	160	13
172460-73140	86	11
172460-73150	85	14
	86	13
	160	14

Parts No.	Fig. No.	Ref. No.
172460-73160	85	15
	86	15
	160	15
172460-73170	85	5
	86	23
	160	5
172460-73180	85	16
	86	18
	160	16
172460-73190	85	6
	86	24
	160	6
172460-73200	85	17
	86	21
	160	17
172460-73210	85	18
	86	26
	160	18
172460-73231	85	19
	86	28
	160	19
172460-73240	85	20
	86	29
	160	20
172460-73280	85	22
	86	31
	160	22
172460-73290	85	24
	160	24
172460-73330	85	25
	86	33
	160	25
172460-73340	85	26
	86	34
	160	26
172460-73350	85	27
	86	35
	160	27
172460-73360	85	28
	86	36
	160	28
172460-73370	85	29
	86	37
	160	29
172460-73380	85	30
	86	38
	160	30
172460-73390	85	31
	86	39
	160	31

Parts No. Index

Parts No.	Fig. No.	Ref. No.
172460-73400	85	7
	86	25
	160	7
172460-73410	85	32
	160	32
172460-73420	85	33
	86	40
	160	33
172460-73431	160	34
172460-73570	92	72
	164	75
172460-73900	85	35
	86	42
	160	35
172460-73910	85	36
	86	43
	160	36
172460-73920	85	37
	86	44
172460-81400	131	4
172461-73110	85	8
	160	8
172461-73270	85	21
	86	30
	160	21
172462-03320	2	6
172463-03290	1	6
	199	6
172463-03320	4	25
	155	26
	202	25
	203	26
172469-03261	135	9
	188	10
172469-03320	135	16
	188	17
172469-03360	135	18
	188	19
172469-03480	135	26
	188	27
172469-03540	135	30
	188	31
172472-03141	3	5
	4	6
	69	11 A
	154	5
	155	6
	200	5
	201	5
	202	6

Parts No.	Fig. No.	Ref. No.
172472-03141	203	6
172472-03230	5	3
172472-03241	5	5
	77	1 G
	144	50 C
172472-03261	5	6
	132	6 A
	219	6 A
172472-03290	24	2
172472-03300	24	3
172472-03330	5	7
	132	6 B
	219	6 B
172472-17611	79	1
172478-03290	135	12
	188	13
172478-17201	22	1
172490-13112	10	5
172490-37320	42	9
	189	10
172490-74310	99	9
	167	7
	171	22
	208	8
	212	7
	216	22
172490-74320	99	11
	167	8
	171	24
	208	10
	212	8
	216	24
172490-74330	99	12
	167	9
	171	25
	208	11
	212	9
	216	25
172491-18620	34	7
172491-62830	68	23
172499-70180	96	31
	98	4
	167	19
	169	4
	205	31
	207	4
	212	19
	214	4
172499-74860	100	15
	172	15

Parts No.	Fig. No.	Ref. No.
172499-74860	209	15
	217	15
172519-63240	19	22
	50	4
		5
	65	4
		5
172527-68980	145	15
172531-74710	173	14
	218	14
172534-76760	118	15
172538-17100	27	1
		12
172538-65320	68	9
172538-66510	79	3
172538-68450	63	9
172544-03171	199	4
172631-16350	16	7
172637-76110	107	20
172638-73330	92	15
	164	11
172638-73470	93	15
172638-76190	162	19
	180	12
172648-16600	28	3
	31	3
	136	9
	146	22 -2A
172649-16560	158	4
172653-16100	16	1
172730-05250	53	1
172730-75141	109	1
172823-45940	47	16
172828-76330	183	14
172958-03160	5	2
172958-07330	6	9 -1
172958-17101	24	4
172958-17110	24	1
172958-17121	129	1
172958-17140	24	7
172958-17150	24	8
172958-17160	24	9
172958-17170	24	10
172958-17180	24	11
172958-17190	24	12
172958-17200	24	13
172958-17210	24	14
172958-17220	24	15
172958-17230	24	14 -1
172958-17400	24	4 -1

Parts No.	Fig. No.	Ref. No.
172958-17410	24	1 -1
172958-72750	126	3
172958-72760	126	6
172958-72770	126	11
172958-72801-N	126	1
172958-72811-N	126	14
172958-72860	126	17
172958-72890	126	20
172958-72950	126	21
172958-72960	126	22
172958-72970	126	16
172958-72983-N	126	23
172958-76102-Y	127	3
172958-76130	127	4
172958-78200	127	10
172958-78210	127	11
172958-81590	153	1
172958-81600	153	2
172958-81904-Y	127	15
172958-83102-Y	129	3
172958-83111-Y	129	4
172958-83120	129	5
172958-83131	129	6
172958-83140	129	7
172958-83150	129	8
172958-83171-Y	129	9
172958-83183	129	10
172958-83220	129	12
172958-83252	129	13
172958-83271-Y	129	14
172958-83281-Y	129	15
172958-83292-Y	129	16
172958-83330	129	17
172960-73430	85	34
172960-73431	86	41
172960-83210	129	11
172A07-03160	2	2
172A07-03410	135	22
	188	23
172A21-13100	10	2
		20
172A23-70120	163	6
		8
172A23-71460	163	10
172A23-72043	87	1
	88	1
	89	1
	161	1
	191	33
	192	38

Parts No. Index

Parts No.	Fig. No.	Ref. No.
172A23-72043	193	32
	196	39
172A23-72052	87	2
	88	2
	89	2
	161	2
	191	34
	192	39
	193	33
	196	40
172A23-72081	87	4
	88	4
	89	4
	161	4
	191	36
	192	41
	193	35
	196	42
172A25-68301-2	81	1
172A25-68500	81	2
172A25-81900	90	32
	133	2
	187	3
	194	27
172A36-03411	1	11
	73	6 C
	199	11
172A36-74750	104	7
	174	7
172A36-74780	104	8
	174	8
172A37-03150	135	2
	188	2
172A37-03160	135	3
	188	3
172A37-03180	135	4
	188	4
172A37-03220	135	5
	188	5
172A37-03231	135	6
	188	6
172A37-03241	135	7
	188	7
172A37-03250	135	8
	188	9
172A37-03271	135	10
	188	11
172A37-03280	135	11
	188	12
172A37-03290	135	13

Parts No.	Fig. No.	Ref. No.
172A37-03290	188	14
172A37-03300	135	14
	188	15
172A37-03310	135	15
	188	16
172A37-03330	135	17
	188	18
172A37-03360	135	19
	188	20
172A37-03370	135	20
	188	21
172A37-03400	135	21
	188	22
172A37-03410	135	23
	188	24
172A37-03420	135	24
	188	25
172A37-03430	135	25
	188	26
172A37-03500	135	27
	188	28
172A37-03520	135	28
	188	29
172A37-03530	135	29
	188	30
172A37-03680	135	32
	188	33
172A37-03710	135	33
	188	34
172A37-03720	135	34
	188	35
172A37-03730	135	35
	188	36
172A38-03201	2	3
	12	14 A
172A38-03211	2	4
	13	8 A
172A46-14601	15	7
172A46-46500	50	2
172A46-46530	50	3
172A46-53360	138	6
172A46-57610	56	4
172A46-61460	60	2
172A46-61940	58	5
172A46-72070	87	3
	88	3
	89	3
	161	3
	191	35
	192	40

Parts No.	Fig. No.	Ref. No.
172A46-72070	193	34
	196	41
172A46-72590	89	11
172A46-72910	90	6
172A46-73100	85	1
172A46-73110	85	9
	160	9
172A46-73120	85	11
	160	11
172A46-73200	85	32 -1
	160	32 -1
172A46-73520	92	65
172A46-73530	92	66
	164	70
172A46-73540	92	67
	164	71
172A46-73560	92	69
	164	73
172A46-73711	93	2
172A46-73730	93	17
172A46-73740	93	19
172A46-73750	93	57
172A46-74250	98	6
	169	6
	207	6
	214	6
172A46-74340	168	13
	171	13
	206	13
	209	36
	213	13
	216	13
172A46-77800	125	1
172A46-81901	90	33
	194	28
172A47-03371	3	25
	4	32
	154	26
	155	33
	200	25
	201	26
	202	32
	203	33
172A47-03651	135	31
	188	32
172A47-11200	34	1
172A47-14520	14	26
172A47-65550	74	2
172A47-68860	82	2
172A47-68870	82	3

Parts No.	Fig. No.	Ref. No.
172A47-68880	82	4
172A47-68890	82	5
172A47-72840	87	41
	88	47
	89	41
	161	47
	191	39
	192	45
	193	39
	196	46
172A47-72881-N	87	42
	191	40
172A47-73320	92	12
	164	8
172A47-74121	118	1
172A47-74260	100	10
	172	10
	209	10
	217	10
172A47-74270	96	5
	168	17
	205	6
	213	17
172A47-74360	98	9
	169	9
	207	9
	214	9
172A47-74370	98	10
	169	10
	207	10
	214	10
172A47-74380	98	11
	169	11
	207	11
	214	11
172A47-74460	96	8
	168	20
	205	9
	213	20
172A47-74560	96	10
	168	22
	205	11
	213	22
172A47-74570	96	11
	168	23
	205	12
	213	23
172A47-74580	96	12
	168	24
	205	13

Parts No. Index

Parts No.	Fig. No.	Ref. No.
172A47-74580	213	24
172A47-74770	105	15
172A47-74920	96	14
	168	26
	205	15
	213	26
172A47-74930	96	15
	168	27
	205	16
	213	27
172A47-74950	96	42
	100	16
	167	30
	172	16
	205	42
	209	16
	212	30
	217	16
172A47-74970	96	43
	167	31
	205	43
	212	31
172A47-74980	98	17
	169	17
	207	17
	214	17
172A47-75450	167	34
	212	34
172A47-75460	99	2 -1
	167	15
	171	29
	212	15
172A47-75620	96	16
	99	13
	167	12
	168	28
	171	26
	205	17
	208	12
	212	12
	213	28
	216	26
172A47-75680	96	17
	100	17
	168	29
	172	17
	205	18
	209	17
	213	29
	217	17

Parts No.	Fig. No.	Ref. No.
172A47-75690	96	18
	168	30
	205	19
	213	30
172A47-75720	100	18
	172	18
	209	18
	217	18
172A47-76111	22	2
172A47-76151	108	3
172A47-76310	111	9
	178	11
172A47-76460	117	11
172A47-77820	125	3
172A47-81980	90	35
	194	30
172A48-53371	138	7
172A51-73100	160	1
172A52-76110	109	8
172A64-13760	13	6
172A64-14250	15	1
172A64-17250	19	14
172A64-64910	69	9
172A64-65160	35	4
172A64-74590	102	5
	103	5
172A64-74600	102	7
	103	7
172A64-74610	102	8
	103	8
172A64-74620	102	9
	103	9
172A64-74630	102	10
	103	10
172A64-74640	102	11
	103	11
172A64-74650	102	12
	103	12
172A64-74660	102	14
	103	13
172A64-74670	102	13 B
		15
172A64-74680	102	16
	103	14
172A64-74900	102	17
	103	16
172A64-74930	102	18
	103	17
172A65-03230	1	4
172A65-13290	38	5

Parts No.	Fig. No.	Ref. No.
172A65-16550	17	8
	190	8
172A65-64840	13	8
172A66-72140	192	31
	196	31
172A69-03220	3	7
	4	8
	154	6
	155	7
	200	7
	201	6
	202	8
	203	7
172A69-12100	9	1
172A69-12120	9	7
172A69-14230	14	21
172A69-17260	19	15
172A69-19270	11	7
	13	7
172A69-46270	51	7
172A77-37370	40	5
	41	10
172A77-46050	51	1
172A78-74650	102	20
	103	19
172A79-03150	3	24
	4	31
	154	25
	155	32
	200	24
	201	25
	202	31
	203	32
172A79-03160	1	5
	199	5
172A79-03220	77	1 J
	144	50 F
	154	7
	155	8
	201	7
	203	8
172A79-03240	188	8
172A79-72090	162	4
172A79-72570	10	11
	87	40
	88	45
	89	39
	161	45
	191	38
	192	43

Parts No.	Fig. No.	Ref. No.
172A79-72570	193	37
	196	44
172A79-72870	162	9
	163	15
172A79-73700	165	1
172A79-73710	165	2
172A79-73720	165	3
172A79-73790	165	4
172A79-76110	22	4
172A79-76140	181	4
	182	4
172A79-94810	187	18
172A79-94820	187	19
172A79-95101	187	20
172A79-95301	187	21
172A85-38200	44	7
		13
172A85-38210	44	8
172A85-38220	44	9
172A85-38230	44	10
172A86-74500	183	1
172A89-17180	19	13
172A89-64740	71	11
172A89-64780	71	12
172A89-64790	71	13
172A89-64800	71	14
172A89-64810	71	15
172A89-64820	71	16
172A89-64830	71	17
172A89-64840	71	18
172A89-64850	71	19
172A89-64860	71	20
172A89-64870	71	21
172A89-64880	71	22
172A89-64890	71	23
172A89-64900	71	24
172A89-64910	71	25
172A89-64920	71	26
172A89-64950	71	5
172A89-69860	151	9
172A89-77800	125	2
172B02-03300	199	19
172B02-08100	79	6
172B02-08170	151	1
172B02-08180	152	1
172B02-17150	157	3
	158	5
172B02-17160	146	28 -1
172B02-53310	54	1
172B02-64210	71	2

Parts No. Index

Parts No.	Fig. No.	Ref. No.
172B02-64250	71	9
172B02-64260	71	10
172B02-64270	71	2 A
172B02-64800	70	3
	71	1
172B02-65100	73	2 -1
172B02-65350	73	11 A
172B02-67010	151	2
	152	2
172B02-67020	143	2
172B02-67040	146	2
172B02-67060	144	2
172B02-67080	147	2
172B02-67090	147	3
172B02-67100	140	2
172B02-67120	144	3
	146	3
172B02-67130	147	4
172B02-67140	144	4
172B02-67150	141	6
	146	4
172B02-67160	140	3
	141	7
		8
	145	7
	151	3
	152	3
172B02-67170	145	8
172B02-67180	140	4
172B02-67190	146	5
172B02-67200	143	3
	145	9
		10
	146	6
		7
	147	5
172B02-67210	140	5
172B02-67230	145	11
172B02-67240	147	6
		7
		8
		9
172B02-67250	142	2
	144	5
172B02-67260	142	3
172B02-67280	142	4
		5
		6
		10
		17

Parts No.	Fig. No.	Ref. No.
172B02-67290	146	8
172B02-67300	146	9
172B02-67310	146	10
		11
172B02-67320	147	10
172B02-67340	147	11
172B02-67350	141	9
172B02-67360	147	12
172B02-67380	143	4
		5
172B02-67390	140	6
172B02-67400	141	10
172B02-67410	140	7
172B02-67430	140	8
	141	11
	142	7
	145	12
172B02-67440	140	9
172B02-67500	141	12
172B02-67520	142	8
	145	13
172B02-67530	141	13
	145	14
172B02-67550	140	10
	151	4
	152	4
172B02-67600	141	14
172B02-67620	140	11
172B02-67650	141	15
172B02-67670	140	12
172B02-67700	141	16
172B02-67710	140	13
172B02-67750	146	12
172B02-67760	146	13
172B02-67800	146	14
172B02-67850	146	15
172B02-67870	143	6
	146	16
172B02-67900	151	5
	152	5
172B02-67910	79	4
172B02-67920	151	6
	152	6
172B02-67930	151	7
	152	7
172B02-67940	151	8
	152	8
172B02-67950	143	7
	146	17
	147	13

Parts No.	Fig. No.	Ref. No.
172B02-67950	147	14
172B02-67960	147	15
172B02-67970	147	14 -1
172B02-68000	80	1
172B02-68001	80	1 -1
172B02-68002	80	1 -2
172B02-68200	141	1
172B02-68210	141	17
172B02-68220	141	18
172B02-68230	141	19
172B02-68240	141	20
172B02-68250	141	21
172B02-68260	141	22
172B02-68270	141	23
172B02-68280	141	24
172B02-68290	141	25
172B02-68300	141	26
172B02-68310	141	27
172B02-68320	141	28
172B02-68330	141	29
172B02-68340	141	30
172B02-68350	141	31
172B02-68360	141	32
172B02-68370	141	33
172B02-68380	141	34
172B02-68390	141	35
172B02-68400	141	36
172B02-68410	141	37
172B02-68420	141	38
172B02-68430	141	39
	147	16
172B02-68440	141	40
172B02-68450	141	41
172B02-68500	143	1
172B02-68510	143	8
172B02-68520	143	9
172B02-68530	143	10
172B02-68540	143	11
172B02-68550	143	12
172B02-68560	143	13
172B02-68570	143	14
172B02-68580	143	15
172B02-68590	143	16
172B02-68600	143	17
172B02-68610	143	18
172B02-68620	143	19
172B02-68630	143	20
172B02-68640	143	21
172B02-68650	143	22
172B02-68660	143	23

Parts No.	Fig. No.	Ref. No.
172B02-68700	147	17
172B02-68710	147	18
172B02-68720	147	19
172B02-68730	147	20
172B02-68740	147	21
172B02-68750	146	18
172B02-68760	147	22
172B02-68780	147	23
172B02-68790	147	24
172B02-68800	147	25
172B02-68810	147	26
172B02-68820	146	19
172B02-68840	147	27
172B02-68850	146	20
172B02-68860	146	21
172B02-68870	146	33 -1
172B02-68880	147	28
172B02-68890	147	29
172B02-68900	82	6
172B02-68910	82	7
172B02-68920	82	8
172B02-68930	82	18
172B02-68940	82	9
172B02-68950	83	1
172B02-69010	145	16
172B02-69020	147	44 -1
172B02-69030	147	43 -1
172B02-69040	58	1 -1
	69	1 -1
	145	2 -1
172B02-69100	146	22
172B02-69101	146	22 -1
172B02-69102	146	22 -2
172B02-69110	146	23
172B02-69120	142	9
172B02-69130	142	16
172B02-69140	142	23
172B02-69150	142	24
172B02-69160	142	25
172B02-69170	142	11
		18
		26
172B02-69180	142	12
		19
		27
172B02-69190	142	28
172B02-69200	142	29
172B02-69210	142	30
172B02-69220	142	31
172B02-69230	144	6

Parts No. Index

Parts No.	Fig. No.	Ref. No.
172B02-69240	144	7
172B02-69250	144	8
172B02-69260	142	13
172B02-69270	142	20
172B02-69280	142	14
		21
172B02-69290	142	15
		22
172B02-69300	144	9
172B02-69301	144	39
172B02-69310	144	10
172B02-69311	144	40
172B02-69320	144	11
172B02-69321	144	41
172B02-69330	144	12
172B02-69340	144	13
172B02-69350	144	14
172B02-69351	144	42
172B02-69360	144	15
172B02-69361	144	43
172B02-69370	144	16
172B02-69380	144	17
172B02-69390	144	18
172B02-69400	144	19
172B02-69401	144	44
172B02-69410	144	20
172B02-69411	144	45
172B02-69420	144	21
172B02-69421	144	46
172B02-69430	144	22
172B02-69431	144	47
172B02-69440	144	23
172B02-69450	144	24
172B02-69451	144	48
172B02-69460	144	26
172B02-69490	144	27
172B02-69500	144	28
172B02-69510	144	29
172B02-69520	144	30
172B02-69530	144	31
172B02-69540	144	32
172B02-69550	144	33
172B02-69560	144	34
172B02-69570	144	35
172B02-69580	144	36
172B02-69590	144	37
172B02-69600	144	38
172B02-69610	140	14
172B02-69620	140	15
	141	42

Parts No.	Fig. No.	Ref. No.
172B02-69630	140	16
172B02-69640	140	17
172B02-69650	140	18
172B02-69660	140	19
172B02-69670	140	20
172B02-69680	140	21
172B02-69690	140	22
172B02-69700	140	23
172B02-69710	145	17
172B02-69720	145	18
172B02-69730	145	19
172B02-69740	145	20
172B02-69750	145	21
172B02-69760	145	22
172B02-69770	145	23
172B02-69780	145	24
172B02-69790	145	25
172B02-69800	145	26
172B02-69810	145	27
172B02-69820	147	30
172B02-69830	147	31
172B02-69840	147	32
172B02-69841	147	32 -1
172B02-69850	140	24
172B02-69860	140	25
172B02-69870	140	26
172B02-69880	147	33
		34
172B02-69890	147	35
172B02-69900	147	36
172B02-69910	147	37
172B02-69920	147	38
172B02-69930	147	39
172B02-69940	147	40
172B02-69950	147	41
172B02-69960	147	42
172B02-69970	140	27
172B02-69980	146	24
172B02-69990	146	25
172B02-72400	88	25
	161	24
172B02-73800	148	1
172B02-73810	148	2
172B02-73840	148	3
172B02-73850	148	4
	165	10
172B02-73860	148	5
	165	11
172B02-73870	148	11
172B02-73880	148	12

Parts No.	Fig. No.	Ref. No.
172B02-73880	165	5
172B02-73890	148	11 -1
	165	6
172B02-73900	148	10
172B02-73910	148	10 -1
172B02-74150	101	13
	210	13
172B02-74170	101	20
	210	20
172B02-74180	101	1
	210	1
172B02-74200	101	5
	172	28
	210	5
	217	28
172B02-74240	100	6
	172	6
	209	6
	217	6
172B02-74250	100	8
	172	8
	209	8
	217	8
172B02-74260	100	25
	171	2
	209	25
	216	2
172B02-74280	100	33
	171	10
	209	33
	216	10
172B02-74290	99	3
	171	16
	208	2
	216	16
172B02-74310	99	10
	171	23
	208	9
	216	23
172B02-74320	99	18
	170	16
	208	18
	215	16
172B02-74340	99	25
	170	23
	208	25
	215	23
172B02-74350	98	19
	170	1
	207	19

Parts No.	Fig. No.	Ref. No.
172B02-74350	215	1
172B02-74370	97	20
	98	26
	169	25
	170	8
	206	20
	207	26
	214	25
	215	8
172B02-74380	98	3
	169	3
	207	3
	214	3
172B02-74400	97	14
	169	19
	206	14
	214	19
172B02-74450	96	4
	168	16
	205	5
	213	16
172B02-74470	96	30
	167	18
	205	30
	212	18
172B02-74490	96	40
	167	28
	205	40
	212	28
172B02-74730	101	26
	173	18
	210	26
	218	18
172B02-74750	96	45
	99	31
	100	37
172B02-74760	96	28
172B02-74820	101	12
	210	12
172B02-74850	99	1
	171	15
172B02-74860	99	16
	170	14
	208	16
	215	14
172B02-74890	96	3
	168	14
	205	3
	213	14
172B02-74900	96	29

Parts No. Index

Parts No.	Fig. No.	Ref. No.
172B02-74900	167	17
	205	29
	212	17
172B03-03020	135	1
172B03-03030	188	1
172B03-03080	154	4
	155	5
	201	4
	203	5
172B03-03110	3	4
	4	5
	200	4
	202	5
172B03-03150	1	2
172B03-03151	1	2 -1
172B03-03160	1	3
	138	2
172B03-03170	4	2
	155	2
172B03-03181	3	2
	4	3
	154	2
	155	3
172B03-03200	3	6
	4	7
	200	6
	202	7
172B03-03220	3	27
	4	34
	154	28
	155	35
	200	27
	201	28
	202	2
	203	2
172B03-03230	135	49
	188	50
172B03-03240	4	28
	155	29
	202	28
	203	29
172B03-03250	4	29
	155	30
	202	29
	203	30
172B03-03260	2	5
172B03-03280	4	24
	155	25
	202	24
	203	25

Parts No.	Fig. No.	Ref. No.
172B03-03380	3	14
	4	15
	154	14
	155	15
	200	14
	201	14
	202	15
	203	15
172B03-03390	2	8
	7	9 A
172B03-03410	3	16
	4	17
	69	11 B
	154	16
	155	17
	200	16
	201	16
	202	17
	203	17
172B03-03420	4	30
	145	28 A
	155	31
	202	30
	203	31
172B03-03430	3	18
	4	19
	154	18
	155	19
	200	18
	201	18
	202	19
	203	19
172B03-03440	3	19
	4	20
	154	19
	155	20
	200	19
	201	19
	202	20
	203	20
172B03-03460	1	13
	199	13
172B03-03480	3	22
	4	23
	77	1 E
	144	49 A
	200	22
	202	23
172B03-03670	154	22
	155	23

Parts No.	Fig. No.	Ref. No.
172B03-03670	201	22
	203	23
172B03-03680	77	1 K
	144	49 B
	154	23
	155	24
	201	23
	203	24
172B03-04400	5	8
	77	1 H
	144	50 D
172B03-04410	5	9
	77	1 I
	144	50 E
172B03-04470	199	17
172B03-04480	199	18
172B03-04500	135	36
172B03-04510	135	37
	188	37
172B03-04520	135	38
	188	38
172B03-04530	135	39
	188	39
172B03-04540	135	40
	188	40
172B03-04550	135	41
	188	41
172B03-04560	135	42
	188	42
172B03-04570	135	43
	188	43
172B03-04580	135	44
	188	44
172B03-04590	135	45
172B03-04600	135	46
	188	45
172B03-04610	135	47
	188	46
172B03-04630	188	47
172B03-04640	188	48
172B03-04790	138	2 -1
	199	3
172B03-05250	13	1
172B03-05310	6	1
172B03-05360	6	2
172B03-08130	1	1
172B03-08131	1	1 -1
172B03-08132	199	1
172B03-08170	2	1
172B03-08200	5	1

Parts No.	Fig. No.	Ref. No.
172B03-08240	3	1
172B03-08241	200	1
172B03-08270	4	1
172B03-08271	202	1
172B03-08310	136	1
172B03-08350	23	14
172B03-08380	107	1
172B03-08390	14	1
172B03-08520	154	1
172B03-08521	201	1
172B03-08530	155	1
172B03-08531	203	1
172B03-08590	137	1
172B03-08680	138	1
172B03-08681	138	1 -1
172B03-08790	186	1
172B03-09200	138	3
172B03-11350	7	1
172B03-11380	7	2
172B03-11450	17	1
	190	1
172B03-11510	8	1
172B03-11520	8	2
172B03-11530	8	3
172B03-11540	8	4
172B03-11550	8	5
172B03-11560	8	6
172B03-11570	8	7
172B03-11600	7	3
172B03-11640	7	5
172B03-11650	7	6
172B03-11680	7	8
172B03-11690	7	9
172B03-11700	7	10
172B03-11730	7	12
172B03-11740	7	13
172B03-11850	7	14
172B03-11851	7	14 -1
172B03-13100	10	3
172B03-13160	12	3
172B03-13180	8	8
172B03-13230	10	8
172B03-13280	10	9
172B03-13290	10	10
172B03-13350	11	1
172B03-13351	11	1 -1
172B03-13400	11	2
172B03-13550	12	9
172B03-13560	12	10
172B03-13570	12	11

Parts No. Index

Parts No.	Fig. No.	Ref. No.
172B03-13580	12	12
172B03-13600	13	2
172B03-13700	13	4
172B03-13710	13	5
172B03-13800	12	13
172B03-13900	11	3
172B03-13970	11	5
172B03-13980	11	6
172B03-14150	14	18
172B03-14200	14	20
172B03-14220	14	12
172B03-14230	14	22
172B03-14250	14	13
172B03-14270	14	23
172B03-14300	15	5
172B03-14350	15	6
172B03-14610	15	11
172B03-16000	136	7
172B03-16100	16	2
172B03-16120	16	4
172B03-16130	26	6
172B03-16160	16	5
172B03-16170	17	2
	190	2
172B03-16180	16	6
172B03-16181	16	6 -1
172B03-16300	17	3
	190	3
172B03-16340	157	2
172B03-16360	158	2
172B03-16440	17	4
	190	4
172B03-16500	17	5
172B03-16501	190	5
172B03-16502	190	5 -1
172B03-16520	19	2
172B03-16521	19	2 -1
172B03-16550	26	1
172B03-16560	23	1
172B03-16570	23	2
172B03-16580	19	2 -2
172B03-16581	19	2 -3
172B03-16600	28	2
172B03-16601	28	2 -1
172B03-16602	28	2 -2
172B03-16620	136	8
172B03-16640	25	2
172B03-16641	25	2 -1
172B03-16650	25	3
172B03-16660	28	37

Parts No.	Fig. No.	Ref. No.
172B03-16740	23	3
172B03-16760	23	4
172B03-16850	31	2
172B03-16870	29	2
172B03-16880	19	33
172B03-16890	23	5
172B03-16950	20	1
172B03-17000	19	10
172B03-17050	19	11
172B03-17051	19	11 -1
172B03-17100	19	12
172B03-17110	19	12 -1
172B03-17250	27	3
172B03-17251	27	3 -1
172B03-17252	27	3 -2
172B03-17253	27	3 -3
172B03-17260	27	3 A
172B03-17261	27	3 A-1
172B03-17301	27	4
172B03-17310	27	5
172B03-17320	27	6
172B03-17331	27	11
172B03-17341	27	13
172B03-17350	27	4 A
172B03-17360	27	5 A
172B03-17370	27	6 A
172B03-17380	27	11 A
172B03-17390	27	13 A
172B03-17460	26	3
172B03-17470	26	4
172B03-17500	49	27
172B03-17600	36	7
	150	1
172B03-17610	150	2
172B03-17620	150	3
172B03-17630	150	4
172B03-17640	150	5
172B03-17700	30	1
172B03-17770	30	2
172B03-17831	136	12
172B03-17851	136	13
172B03-17900	24	19
172B03-17980	136	15
172B03-17990	72	6
172B03-18100	34	3
172B03-18310	32	2
	36	2
172B03-18350	32	3
	36	3
172B03-18550	32	4

Parts No.	Fig. No.	Ref. No.
172B03-18560	36	4
172B03-18570	32	5
172B03-18580	32	6
	36	5
172B03-18600	33	4
	37	4
172B03-18640	33	5
	37	5
172B03-18700	38	2
172B03-18740	38	3
172B03-18760	38	4
172B03-18780	38	7
172B03-18810	34	10
172B03-18880	34	11
172B03-18900	34	12
172B03-18940	35	2
172B03-18950	35	5
172B03-19100	32	12
	149	1
172B03-19110	32	14
172B03-19120	32	13
	149	8
	150	7
172B03-19130	149	10
	150	8
172B03-19140	149	11
	150	9
172B03-19150	149	13
172B03-19160	32	16
172B03-19190	149	15
172B03-19200	149	16
172B03-19210	149	18
172B03-19220	149	19
	150	11
172B03-19230	149	20
	150	12
172B03-19240	149	21
	150	13
172B03-19250	149	22
	150	14
172B03-19260	149	23
	150	15
172B03-19270	149	24
	150	16
172B03-19280	149	25
172B03-19290	149	26
172B03-19300	149	27
172B03-19310	149	28
172B03-19320	149	29
	150	17

Parts No.	Fig. No.	Ref. No.
172B03-19330	149	30
172B03-19340	149	31
172B03-19350	149	32
172B03-19360	149	33
172B03-19370	149	34
	150	18
172B03-19380	149	35
	150	19
172B03-19390	149	36
172B03-19400	149	37
172B03-19410	149	38
172B03-19420	149	39
172B03-19430	149	40
172B03-19440	149	41
	150	20
172B03-19450	149	42
	150	21
172B03-19460	149	43
	150	22
172B03-19470	149	44
	150	23
172B03-19480	149	45
	150	24
172B03-19490	149	46
	150	25
172B03-19500	149	47
	150	26
172B03-19510	149	48
	150	27
172B03-19520	149	49
	150	28
172B03-19530	149	50
	150	29
172B03-19540	149	51
	150	30
172B03-19550	149	52
172B03-19650	35	6 B
172B03-19660	35	6 C
172B03-19670	35	6 D
172B03-19680	35	6
172B03-19710	33	6
	37	6
172B03-19750	33	7
172B03-19760	33	8
172B03-19780	35	7
172B03-19800	33	11
172B03-19820	33	14
172B03-19840	32	15
172B03-19860	33	17
		29

Parts No. Index

Parts No.	Fig. No.	Ref. No.
172B03-19860	37	7
		15
172B03-19870	33	29 -1
	37	15 -1
172B03-19890	33	18
172B03-19920	32	17
	36	9
172B03-19950	33	19
	37	8
172B03-19980	37	9
172B03-37100	40	1
172B03-37110	40	2
172B03-37120	41	1
172B03-37130	41	2
172B03-37300	189	1
172B03-37320	189	4
172B03-37700	40	14
	41	14
172B03-37780	40	17
	41	17
172B03-37840	40	18
	41	18
172B03-37850	40	19
	41	19
172B03-38100	44	1
172B03-38110	44	2
172B03-38300	44	12
172B03-38400	197	1
172B03-38410	197	2
172B03-38500	197	12
172B03-38600	44	11
172B03-44201	46	24
172B03-44231	46	25
172B03-44600	198	1
172B03-44610	198	3
172B03-44650	198	4
172B03-44700	198	9
172B03-44710	198	11
172B03-44750	198	12
172B03-45100	46	2
172B03-45150	46	5
172B03-45200	47	2
172B03-45250	47	6
172B03-45300	47	7
172B03-45320	47	8
172B03-45400	46	8
172B03-45450	49	1
172B03-45580	48	2
172B03-45600	45	1
172B03-45800	49	4

Parts No.	Fig. No.	Ref. No.
172B03-45800	159	5
172B03-45850	49	5
	159	6
172B03-45900	49	6
	159	7
172B03-45950	49	9
	159	10
172B03-45990	49	10
	159	11
172B03-46010	51	20
172B03-46060	51	21
172B03-46100	51	2
172B03-46200	51	6
172B03-46310	51	8
172B03-46350	51	9
172B03-46400	68	1
172B03-46810	48	8
172B03-50600	52	2
172B03-50760	60	1
172B03-53320	138	5
172B03-53410	138	8
172B03-54090	55	1
172B03-54091	55	1 -1
172B03-54710	55	3
172B03-54800	55	5
172B03-61010	61	1 -1
172B03-61020	61	1
172B03-61050	57	1
172B03-61070	57	2
172B03-61090	57	3
172B03-61110	61	4 -1
172B03-61120	61	4
172B03-61200	57	4
172B03-61230	57	8
172B03-61260	57	12
172B03-61320	62	1
172B03-61380	62	3
172B03-61400	59	1
172B03-61410	59	2
172B03-61420	59	3
172B03-61430	59	4
172B03-61440	59	5
172B03-61450	57	6
172B03-61460	57	10
172B03-61470	57	14
172B03-61480	57	7
172B03-61490	57	15
172B03-61540	57	19
		20
172B03-61810	58	2

Parts No.	Fig. No.	Ref. No.
172B03-61820	58	3
172B03-61830	58	4
172B03-61850	107	31
172B03-61870	107	32
172B03-61950	58	6
172B03-61960	58	7
172B03-62050	63	1
	64	1
172B03-62100	64	2
172B03-62140	64	3
172B03-62150	63	2
172B03-62170	63	3
172B03-62240	63	4
172B03-62251	63	5
172B03-62300	64	4
172B03-62350	63	6
172B03-62500	64	5
172B03-62520	63	7
172B03-62750	63	8
	64	6
172B03-63050	66	6
	67	5
172B03-63110	65	1
172B03-63120	65	2
172B03-63130	65	3
172B03-63200	67	6
172B03-63210	66	7
	67	19
172B03-63220	66	8
172B03-63250	67	7
172B03-63270	66	9
172B03-63290	67	9
172B03-63300	67	10
172B03-63320	67	12
172B03-63340	67	14
172B03-63400	68	2
172B03-63450	36	10
	68	5
172B03-63500	66	10
	67	15
172B03-63501	66	10 -1
	67	15 -1
172B03-63610	65	1 -1
172B03-63620	65	2 -1
172B03-63630	65	3 -1
172B03-63650	67	10 -1
172B03-63670	67	14 -1
172B03-63700	67	6 -1
172B03-63710	66	7 -1
	67	19 -1

Parts No.	Fig. No.	Ref. No.
172B03-63720	66	8 -1
172B03-63750	67	7 -1
172B03-64010	70	6
172B03-64020	70	7
172B03-64030	70	8
172B03-64040	70	9
172B03-64070	69	3
172B03-64080	69	4
172B03-64190	68	6
172B03-64200	68	3
172B03-64450	68	12
172B03-64500	69	2
172B03-64510	69	5
172B03-64570	69	6
172B03-64600	69	11
172B03-64650	69	12
172B03-64670	69	14
172B03-64680	69	7
172B03-64690	69	8
172B03-64700	72	1
172B03-64750	72	11
172B03-64780	72	8
172B03-64830	70	4
172B03-64850	70	5
172B03-64960	70	11
172B03-64990	68	24
172B03-65100	73	2
172B03-65170	73	7
172B03-65200	73	8
172B03-65250	73	9
172B03-65290	73	10
172B03-65310	73	11
172B03-65320	73	4
172B03-65330	73	5
172B03-65340	73	6
172B03-65350	78	1
172B03-65391	73	12
172B03-65410	74	1
172B03-65600	75	1
172B03-65650	75	3
172B03-65660	75	4
172B03-65670	75	5
172B03-65680	75	6
172B03-65780	107	33
172B03-65800	76	1
172B03-65820	76	5
172B03-65870	76	4
172B03-65880	76	7
172B03-65890	76	8
172B03-65900	76	10

Parts No. Index

Parts No.	Fig. No.	Ref. No.
172B03-65920	78	2
172B03-65940	76	9
172B03-65950	76	11
172B03-66170	58	8
	73	14
	141	2
	145	3
172B03-66300	77	1
172B03-67510	78	3
172B03-67810	78	4
172B03-67910	78	16
172B03-70100	191	1
172B03-70130	191	11
		14
172B03-70140	191	2
172B03-70150	191	3
172B03-70160	191	4
172B03-70170	191	5
172B03-70180	191	6
172B03-70240	191	7
172B03-70250	191	8
172B03-70260	191	9
172B03-70270	191	12
172B03-70280	191	15
172B03-70290	191	18
172B03-70300	196	1
172B03-70320	192	13
		18
	196	14
		18
172B03-70330	196	2
172B03-70340	192	2
	196	3
172B03-70370	192	3
	196	4
172B03-70420	192	4
	196	5
172B03-70430	192	5
	196	6
172B03-70440	192	6
	196	7
172B03-70450	192	7
	196	8
172B03-70460	192	8
	196	9
172B03-70470	192	9
	196	10
172B03-70480	192	10
	196	11
172B03-70490	192	11

Parts No.	Fig. No.	Ref. No.
172B03-70490	196	12
172B03-70500	193	1
172B03-70530	193	2
172B03-70540	193	3
172B03-70620	193	4
172B03-70630	193	5
172B03-70640	193	8
172B03-70650	193	11
172B03-70660	193	14
172B03-70700	194	1
172B03-70730	194	2
172B03-70740	194	3
172B03-70760	194	4
172B03-70770	194	7
172B03-70780	194	10
172B03-70790	194	13
172B03-70800	195	1
172B03-70840	195	2
172B03-70850	195	3
172B03-70860	195	6
172B03-70870	194	6 -2
172B03-70900	192	1
172B03-70920	192	14
172B03-70930	192	15
	196	15
172B03-70960	192	16
	196	16
172B03-70961	192	16 -1
	196	16 -1
172B03-70970	192	17
	196	17
172B03-70980	192	20
	196	20
172B03-70990	192	23
	196	23
172B03-71010	162	2
172B03-71020	162	3
172B03-71050	163	2
172B03-71060	163	3
172B03-71500	163	1
172B03-71510	163	5
172B03-71550	163	7
172B03-71570	163	9
172B03-71590	163	12
172B03-71800	162	1
172B03-71810	162	5
172B03-71820	162	6
		12
172B03-71830	162	7
172B03-71840	162	8

Parts No.	Fig. No.	Ref. No.
172B03-71850	162	11
172B03-71870	162	13
172B03-71900	163	20
172B03-71950	162	17
172B03-72010	87	6
172B03-72020	87	7
172B03-72030	88	7
	161	6
172B03-72040	88	8
	161	7
172B03-72050	89	7
172B03-72070	90	2
172B03-72080	91	2
172B03-72101	87	5
172B03-72111	87	17
172B03-72151	87	21
172B03-72180	87	22
172B03-72200	87	23
172B03-72240	87	39
	191	37
172B03-72250	87	27
172B03-72270	87	14
	88	15
	161	14
172B03-72291	87	20
		26
172B03-72301	161	5
172B03-72310	88	20
	161	19
172B03-72340	88	5
	89	5
	161	44
	192	42
	193	36
	196	43
172B03-72370	88	24
	161	23
172B03-72390	90	3
172B03-72401	88	26
	161	25
172B03-72430	161	29
172B03-72451	88	6
172B03-72470	88	32
172B03-72500	89	6
172B03-72501	89	6 -1
		6 -2
172B03-72510	89	21
172B03-72550	89	25
172B03-72570	89	8
172B03-72580	89	26

Parts No.	Fig. No.	Ref. No.
172B03-72600	89	27
172B03-72601	89	27 -1
172B03-72650	89	31
172B03-72670	88	46
	89	40
	161	46
	192	44
	193	38
	196	45
172B03-72700	90	1
172B03-72710	90	14
172B03-72740	90	18
172B03-72750	90	19
172B03-72780	90	23
172B03-72800	91	1
172B03-72810	91	14
172B03-72850	91	18
172B03-72880	91	22
172B03-72900	91	29
	195	24
172B03-72930	91	9
172B03-72950	91	23
172B03-73100	86	6
172B03-73150	86	14
172B03-73160	86	16
172B03-73170	86	17
172B03-73180	86	19
172B03-73190	86	20
172B03-73200	86	22
172B03-73210	86	27
172B03-73211	86	27 -1
172B03-73300	92	2
172B03-73310	164	1
172B03-73320	92	11
	164	7
172B03-73330	92	16
	164	12
172B03-73340	92	17
	164	13
172B03-73350	92	18
	164	14
172B03-73360	92	19
	164	15
172B03-73370	92	20
	164	16
172B03-73410	92	21
	164	17
172B03-73420	92	40
	164	36
172B03-73450	92	86

Parts No. Index

Parts No.	Fig. No.	Ref. No.
172B03-73450	164	89
172B03-73460	92	50
172B03-73470	92	52
	164	47
172B03-73480	92	81
	164	57
172B03-73490	164	64
172B03-73600	124	1
172B03-73800	94	1
172B03-73810	94	2
172B03-74121	95	1
172B03-74130	166	1
172B03-74140	204	1
172B03-74150	211	1
172B03-74160	100	2
	172	2
	209	2
	217	2
172B03-74170	100	3
	172	3
	209	3
	217	3
172B03-74180	97	2
	168	2
	206	2
	213	2
172B03-74190	97	5
	168	5
	206	5
	213	5
172B03-74210	100	1
	172	1
	209	1
	217	1
172B03-74220	100	24
	171	1
	209	24
	216	1
172B03-74230	98	1
	169	1
	207	1
	214	1
172B03-74240	97	1
	168	1
	206	1
	213	1
172B03-74250	208	1
	216	15
172B03-74260	98	2
	169	2

Parts No.	Fig. No.	Ref. No.
172B03-74260	207	2
	214	2
172B03-74270	100	23
	172	23
	209	23
	217	23
172B03-74280	97	13
	100	36
172B03-74310	173	1
	218	1
172B03-74320	173	2
	218	2
172B03-74330	173	8
	218	8
172B03-74340	172	24
	217	24
172B03-74370	104	2
172B03-74390	167	1
	212	1
172B03-74400	167	2
	212	2
172B03-74410	167	10
	212	10
172B03-74420	104	4
	174	4
172B03-74440	174	2
172B03-74460	176	1
172B03-74530	102	1
172B03-74560	103	1
172B03-74590	102	6
	103	6
172B03-74650	102	13
172B03-74660	102	13 A
172B03-74680	103	15
172B03-74700	104	3
	174	3
172B03-74720	106	4
172B03-74730	105	4
172B03-74740	105	5
172B03-74750	105	10
	106	5
172B03-74770	106	10
172B03-74780	105	16
172B03-74790	106	11
172B03-74800	12	21
172B03-74820	208	15
	216	29
172B03-74860	105	6
		11
	106	6

Parts No.	Fig. No.	Ref. No.
172B03-74870	105	7
		12
	106	7
172B03-74880	105	8
		13
	106	8
172B03-74900	119	1
172B03-74930	106	1
172B03-74950	105	1
172B03-75400	107	15
172B03-75450	107	16
172B03-76010	108	1
	109	2
	111	1
	115	1
	116	1
	120	1
	121	1
		1 -1
	122	1
	127	7 -1
	178	1
	180	1
	181	1
	182	1
	183	4
	184	1
172B03-76030	124	3
172B03-76070	110	1
	177	1
	183	7
172B03-76080	111	15
	178	17
172B03-76090	109	4
172B03-76110	110	2
	116	5
	118	9
	177	2
	180	5
172B03-76120	110	4
	177	4
172B03-76130	110	8
		24
	115	3
	177	8
		24
172B03-76150	116	9
	180	10
172B03-76160	110	13
	118	11

Parts No.	Fig. No.	Ref. No.
172B03-76160	177	13
172B03-76170	110	15
	177	15
172B03-76180	120	6
	121	6
	181	6
	182	6
172B03-76190	110	17
	177	17
172B03-76220	117	1
172B03-76270	117	2
172B03-76310	111	12
	178	14
172B03-76350	119	4
172B03-76370	119	5
172B03-76400	117	3
172B03-76410	117	4
172B03-76420	117	5
172B03-76440	117	6
172B03-76450	117	7
172B03-76470	117	8
172B03-76510	119	6
172B03-76550	128	2
172B03-76570	128	3
172B03-76620	183	15
172B03-76630	110	19
	177	19
172B03-76650	183	16
172B03-77610	118	26
172B03-77661	118	27
172B03-77710	128	8
172B03-77750	118	32
172B03-77900	119	15
172B03-78050	68	13
172B03-78100	108	9
172B03-78110	108	10
172B03-78120	108	11
172B03-78130	108	12
172B03-78140	108	13
172B03-78150	108	14
172B03-78160	113	1
172B03-78170	113	2
172B03-78180	114	1
172B03-78190	114	2
172B03-78200	115	6
	179	6
172B03-78220	113	3
172B03-78230	113	4
172B03-78240	113	5
172B03-78250	113	6

Parts No. Index

Parts No.	Fig. No.	Ref. No.
172B03-78260	109	13
172B03-78280	115	7
	179	7
172B03-78290	115	8
	179	8
172B03-78300	112	1
172B03-78310	108	15
172B03-78320	116	14
	180	17
172B03-78330	116	15
	180	18
172B03-78340	116	16
	180	19
172B03-78350	116	17
	180	20
172B03-78360	116	18
	180	21
172B03-78370	116	19
	180	22
172B03-78380	116	20
	180	23
172B03-78390	116	21
172B03-78400	117	12
172B03-78410	117	13
		21
172B03-78420	117	14
172B03-78510	109	14
172B03-78520	115	9
	179	9
172B03-78530	112	2
172B03-78540	112	3
172B03-78550	112	4
172B03-78560	112	5
172B03-78570	112	6
172B03-78600	108	16
172B03-78610	109	15
172B03-78620	112	7
172B03-78630	115	10
	179	10
172B03-78640	112	8
172B03-78650	112	9
172B03-78700	112	10
172B03-78720	112	11
172B03-78760	112	12
172B03-78910	122	17
	184	19
172B03-78920	122	18
	184	20
172B03-79010	127	13
172B03-79020	127	14

Parts No.	Fig. No.	Ref. No.
172B03-79030	128	6
172B03-79060	179	11
172B03-79070	179	12
172B03-79080	180	24
172B03-79090	180	25
172B03-79100	180	26
172B03-79110	118	16
172B03-79120	118	17
172B03-79130	118	18
172B03-79140	118	19
172B03-79150	118	20
172B03-79160	119	25
172B03-79170	119	26
172B03-79210	120	10
	121	10
172B03-79211	181	10
	182	10
172B03-79220	121	11
	182	11
172B03-79230	120	11
	121	12
	181	11
	182	12
172B03-79240	120	12
	121	13
172B03-79241	181	12
	182	13
172B03-79250	120	13
	121	14
	181	13
	182	14
172B03-79280	183	21
172B03-79290	183	22
172B03-79360	183	23
172B03-79370	183	24
172B03-79380	183	25
172B03-79390	183	26
172B03-79510	123	1
172B03-79520	123	2
172B03-79530	123	3
172B03-79540	123	4
172B03-79550	123	5
172B03-79560	123	6
172B03-79580	184	21
172B03-79590	183	27
172B03-79610	122	19
	184	22
172B03-79620	122	20
	184	23
172B03-79630	122	21

Parts No.	Fig. No.	Ref. No.
172B03-79630	184	24
172B03-79640	122	22
172B03-79650	122	23
	184	25
172B03-79660	122	24
	184	26
172B03-79670	122	25
	184	27
172B03-79680	122	26
	184	28
172B03-79690	122	27
	184	29
172B03-79700	122	28
	184	30
172B03-79720	113	7
172B03-79790	183	28
172B03-79811	118	23
172B03-79860	117	15
		16
		22
172B03-79870	117	17
		18
		23
172B03-79950	113	8
172B03-79970	113	9
172B03-81100	131	1
172B03-81470	219	1
172B03-81500	132	1
172B03-81760	87	44
	191	42
172B03-81780	131	8
172B03-81800	131	9
172B03-81820	87	45
	131	10
	191	43
172B03-81851	133	1
172B03-81871	132	9
	219	9
172B03-81901	133	3
172B03-81902	133	3 -1
172B03-81920	132	10
	219	10
172B03-81950	90	34
	194	29
172B03-81970	186	3
172B03-82180	185	3
172B03-82300	130	1
172B03-82320	130	3
172B03-82330	130	4
172B03-82350	130	5

Parts No.	Fig. No.	Ref. No.
172B03-82400	185	1
172B03-82410	185	2
172B03-82600	133	6
172B03-82601	133	6 -1
172B03-82620	133	11
	139	5
172B03-82621	133	11 -1
	139	5 -1
172B03-82651	133	12
172B03-82661	133	13
172B03-82810	185	6
172B03-82860	185	7
172B03-84600	139	1
172B03-84601	139	1 -1
172B03-94100	134	3
172B03-94200	187	6
172B03-94500	187	13
172B03-94800	187	17
172B04-03980	138	11
	199	2
172B04-16660	25	2 -2
172B04-63770	66	9 -1
172B04-72270	162	15
172B04-72570	163	13
172B04-72580	163	14
172B04-72690	163	4
172B04-72770	162	16
	163	17
172B04-82380	130	6 -1
172B04-82390	130	7 -1
172B05-16610	156	1
172B05-45350	159	1
172B05-45450	159	2
172B05-73480	164	62
172B05-73490	164	67
172B05-73560	164	74
172B05-74350	173	10
	218	10
172B05-74360	173	11
	218	11
172B05-74370	173	12
	218	12
172B05-74710	175	2
172B06-18420	32	8
	36	8
172B06-18450	35	1
172B06-18550	149	2
172B06-18560	32	9
172B06-18570	32	10
172B06-18580	32	11

Parts No. Index

Parts No.	Fig. No.	Ref. No.
172B06-18680	33	9
	149	3
172B06-18690	33	15
	149	4
172B06-18700	33	12
	35	8
172B06-18930	149	5
172B06-18960	149	6
172B06-18970	149	7
	150	6
172B06-19120	149	9
172B06-19140	149	12
172B06-19150	149	14
	150	10
172B06-19200	149	17
172B06-19260	35	6 A
172B11-72560	191	28
	192	32
	196	32
172B16-03180	200	2
	201	2
	202	3
	203	3
172B16-71200	193	22
	194	20
	195	11
172B16-71210	195	12
172B16-72090	193	23
	194	21
172B16-72140	193	24
	194	22
	195	13
172B16-72150	193	25
	194	23
	195	14
172B16-72400	193	10
172B16-72430	195	15
172B16-72460	191	26
172B16-72470	191	27
172B16-72540	193	26
172B16-72750	195	16
172B16-72760	195	19
172B16-72860	193	7
	194	9
	195	18
		21
172B16-72870	195	22
172B16-72880	195	23
183341-91800	82	10
184012-59100	15	34

Parts No.	Fig. No.	Ref. No.
184014-59640	14	29
184015-44680	12	17
184016-44300	28	5
184016-55701	15	21
184016-55710	15	24
184016-59300	15	38
194151-57100	18	1
194200-37780	47	1
194202-56460	17	13
		28
	23	7
	28	7
	29	4
	31	6
	127	1
		2
	136	20
	159	15
	190	14
		15
		27
194440-51620	19	17
194630-42120	40	11
	41	11
	43	6
194680-51670	12	18
	17	11
		12
		12 -1
	19	18
	33	20
		21
	190	12
		13
194940-52110	21	1
194990-22130	38	8
196420-02310	10	1
198071-57110	23	8
198071-61890	66	5
	67	4
198094-82540	147	43
198153-51700	17	10
	190	10
198153-86670	146	33
198220-61480	57	17
		18
198268-82820	147	44
198360-52160	21	6
198360-52320	21	3
198360-52330	21	4

Parts No.	Fig. No.	Ref. No.
198461-52950	19	19
	28	6
	29	3
	31	5
	136	19
198463-86440	146	32
198535-52110	19	5
198535-52120	19	6
198535-52130	19	7
198535-52170	19	8
1A1030-48250	42	5
	189	5
1A1040-43900	34	14
1A1040-45890	47	15
1A1380-62160	58	16
1A1686-57850	19	17 -1
1A6240-37360	92	3
	93	3
	164	2
1A7030-87411	38	10
1A7130-51130	19	4
		4 -1
		4 -2
1A7400-61250	13	9
	107	30
1A7470-86750	146	34
1A7470-86770	146	36
1A7470-87320	67	13
1A7610-62250	70	2
1A7611-86251	146	29
1A7611-86270	25	5
	146	31
1A7611-86351	25	4
1A8060-84280	38	9 -1
	65	6 -1
	67	16 -1
		17 -1
1A8110-84210	38	9
	65	6
	67	16
		17
1A8110-86920	146	37
1A8280-50900	28	35
1C6281-52310	46	14
	47	21
	159	12
		13
		14
1C6281-52310-1	49	11
		12

Parts No.	Fig. No.	Ref. No.
1C6281-52310-1	49	13
	73	1
1C7100-99650	6	12
1D4103-18300	19	16
1D4105-11950	12	1
1D4105-11990	12	2
1E3030-78370	111	17
1E6740-64200	47	22
1E6910-82500	146	28
1E8080-78890	77	8
1E8235-84910	19	9 A
	190	11
1E8915-84120	26	5
	28	9
		36
1E9535-79420	146	27
1E9570-83900	19	9
1RF001-00021	136	2
1RF001-93000	136	27
22117-040000	46	15
22117-060000	73	18
22117-080000	46	16
	47	23
	104	9
	174	9
22117-100000	6	6
	7	16
	13	11
22117-120000	85	51
	86	2
	160	50
22137-050000	27	7
	49	14
		15
		16
	159	16
		17
		18
22137-060000	12	22
	15	42
22137-080000	7	17
	28	13
	48	3
		4
	51	12
	58	18
	69	15
	107	34
	129	22
	198	7

Parts No. Index

Parts No.	Fig. No.	Ref. No.
22137-080000	198	15
22137-100000	7	18
	10	12
	11	8
	14	33
	16	8
	17	15
		16
	19	23
	25	7
	26	7
	47	24
	68	14
	70	12
	78	5
	107	35
		36
	118	29
	119	16
	129	23
	190	17
		18
	191	31
	192	35
	193	29
	196	36
22137-120000	60	3
	78	6
22137-140000	49	17
	107	37
	159	19
22137-160000	77	3
	78	7
	82	11
22137-200000	51	13
22137-240000	104	10
	174	10
22157-060000	16	9
	73	19
22157-080000	19	24
	49	18
	159	20
22157-100000	45	2
	61	2
		5
	63	10
	64	7
	70	13
	74	3
	82	12

Parts No.	Fig. No.	Ref. No.
22157-100000	163	23
22157-120000	87	48
	90	38
	129	24
	131	14
		15
	132	15
	134	10
	187	22
	191	46
	194	33
	219	15
22157-160000	72	2
22190-080002	34	15
22190-120002	107	21 -1
22217-050000	27	8
22217-060000	17	17
	34	16
	104	11
	174	11
	190	19
22217-080000	15	43
	16	10
	34	17
	47	25
	69	16
22217-100000	7	19
	10	13
	47	26
	78	8
	87	49
	88	48
		49
	89	42
		43
	148	6
	161	48
		49
	165	12
	191	47
	192	46
		47
	193	40
		41
	196	47
		48
22217-120000	10	14
		15
	78	9
22217-140000	43	12

Parts No.	Fig. No.	Ref. No.
22217-140000	107	38
22217-160000	42	10
	72	3
	77	4
	78	10
	82	13
	187	23
	189	11
22242-000140	49	19
	159	21
22242-000200	51	14
22242-000210	118	2
22242-000250	43	7
	118	3
22242-000260	88	41
	161	40
22242-000300	40	12
	41	12
22242-000350	92	47
	129	25
	164	43
22242-000451	94	6
	148	7
	165	13
22242-000900	130	9
22252-000250	129	26
22252-000300	129	27
22252-000400	34	18
22252-000521	43	8
22252-000620	42	6
	189	6
22252-000750	42	7
	189	7
22272-000070	51	15
	57	23
		24
	73	20
22312-050100	96	19
	168	31
	205	20
	213	31
22351-025022	163	18
22351-030028	24	16
22351-035040	51	16
22351-050025	159	22
22351-060040	51	17
22372-080000	107	39
22417-200160	104	12
	174	12
22417-200200	51	18

Parts No.	Fig. No.	Ref. No.
22417-200200	58	19
	70	14
22417-250200	6	7
	47	27
22417-320200	13	12
22487-080300	104	13
	174	13
22853-300161	102	13 C
	103	15 A
22857-600160	73	21
22859-500160	71	8
22859-500200	71	8 -1
22877-500120	32	18
	36	12
23000-013000	14	15
	112	13
	115	11
	120	14
	121	15
	122	30
	179	13
	181	14
	182	15
	183	29
	184	32
23000-070000	8	9
		10
23001-019000	112	14
	118	21
		21 -1
23001-022000	32	19
		20
	36	13
23001-025000	108	17
23001-035000	108	18
		18 -1
	109	16
	112	15
		15 -1
	118	22
23001-041000	12	23
		24
		25
23001-048000	12	26
23001-060000	108	19
23061-050300	15	44
23080-013000	14	34
23080-018000	32	21
	33	22
	36	14

Parts No. Index

Parts No.	Fig. No.	Ref. No.
23080-018000	37	10
23391-020000	122	8
	183	17
	184	8
23393-020000	122	9
	179	5
	184	9
23394-020000	122	10
	184	10
23414-120000	107	21
23871-005000	126	31
23871-010000	104	14
	111	10
	165	14
	174	14
	178	12
23871-020000	94	7
	111	11
	148	8
	178	13
23871-030000	107	22
	109	6
23871-040000	109	7
24101-060024	92	73
	164	80
24101-060044	92	74
	164	81
24101-062054	43	9
24101-062064	189	8
24102-062054	43	10
24104-062030	34	19
24190-070002	162	10
	163	16
24190-140001	183	2
24311-000060	96	20
	168	32
	205	21
	213	32
24311-000120	97	23
	98	28
	99	27
	101	22
	169	28
	170	10
		25
	173	15
	206	23
	207	28
	208	27
	210	22

Parts No.	Fig. No.	Ref. No.
24311-000120	214	28
	215	10
		25
	218	15
24311-000160	12	7
	15	25
24311-000200	96	46
	167	35
	205	46
	212	35
24311-000210	47	28
	49	20
	159	23
24311-000250	104	15
	174	15
24311-000320	104	16
	174	16
24311-000480	129	28
24311-000750	94	13
24315-000050	100	19
	172	19
	209	19
	217	19
24315-000080	22	3
		5
	96	21
	98	18
	100	20
	168	33
	169	18
	172	20
	205	22
	207	18
	209	20
	213	33
	214	18
	217	20
24315-000090	97	27
	168	40
	206	27
	213	40
24315-000100	96	22
	97	28
	168	34
		41
	205	23
	206	28
	213	34
		41
24315-000110	96	23

Parts No.	Fig. No.	Ref. No.
24315-000110	96	44
	97	12
		24
	98	29
	99	14
		28
	100	21
		35
	101	11
		23
	105	17
	110	11
	120	5
	121	5
	122	5
	127	5
	163	22
	167	13
		32
	168	12
		35
	169	29
	170	11
		26
	171	12
		27
	172	21
		34
	173	16
	177	11
	180	9
	183	9
	184	5
	205	24
		44
	206	12
		24
	207	29
	208	13
		28
	209	21
		35
	210	11
		23
	212	13
		32
	213	12
		35
	214	29
	215	11

Parts No.	Fig. No.	Ref. No.
24315-000110	215	26
	216	12
		27
	217	21
		34
	218	16
24315-000120	92	13
	164	9
24315-000140	92	14
		48
	96	24
	99	15
	109	9
		11
	110	22
	164	10
		44
	167	14
	168	36
	171	28
	177	22
	205	25
	208	14
	212	14
	213	36
	216	28
24315-000180	87	35
	88	40
	89	36
	96	25
	110	7
	161	39
	168	37
	177	7
	191	30
	192	34
	193	28
	196	35
	205	26
	213	37
24315-000200	102	19
	103	18
	105	9
		14
	106	9
24315-000210	118	4
24315-000220	88	18
	161	17
24315-000240	118	8
24315-000250	118	5

Parts No. Index

Parts No.	Fig. No.	Ref. No.
24315-000560	148	13
	165	7
24315-000750	148	14
	165	8
24321-000300	40	13
	41	13
24321-000450	85	52
	86	3
	160	51
24321-000650	15	26
24321-000700	94	14
24321-001050	107	23
24325-000400	40	21
	41	21
24325-000700	148	15
	165	9
24325-001550	92	49
	164	45
24341-000300	107	24
24352-190110	85	38
	86	45
	160	37
24550-025150	126	19
24550-040300	89	34
	90	25
	91	25
24550-045300	87	29
24761-020000	40	20
	41	20
	46	17
	47	29
	51	5
	87	36
		50
	129	29
	131	16
	132	16
	133	14
		15
	134	11
	139	10
	186	4
	187	24
	191	32
		48
	219	16
24761-040000	47	30
	88	42
	89	37
	125	7

Parts No.	Fig. No.	Ref. No.
24761-040000	131	17
	132	17
	134	12
	161	41
	187	25
	192	36
	193	30
	196	37
	219	17
24761-050000	90	30
	126	32
	163	19
	194	25
26013-060122	11	9
	12	27
		28
	18	2
	19	25
		26
	69	10
	107	40
26013-060162	12	29
	15	45
	63	11
26013-060202	19	27
26013-060302	102	21
	103	20
26013-080122	28	10
	58	12
		13
26013-080162	7	20
	12	30
	13	13
	14	35
	15	46
	17	18
		19
		27
	19	28
	38	11
	47	31
	48	5
		6
		9
	49	21
	63	12
	64	8
	68	15
		16
	70	15

Parts No.	Fig. No.	Ref. No.
26013-080162	105	2
	106	2
	127	16
		17
	129	30
	136	23
	159	24
	175	1
	190	20
		21
26013-080202	46	18
26013-080252	8	11
	19	29
	34	20
26013-080302	12	31
26013-100162	11	10
	26	8
	82	14 -1
	95	2
	117	19
		24
	166	2
	204	2
	211	2
26013-100202	6	8
	7	21
	14	36
	15	47
	16	11
	17	20
		21
		22
	19	30
	20	2
	25	8
	34	21
	45	3
	47	32
	49	22
	57	25
	60	4
	66	11
	67	18
	70	16
	87	37
	104	19
		20
	105	3
	106	3
	107	41

Parts No.	Fig. No.	Ref. No.
26013-100202	107	42
	111	13
	124	4
	129	31
	159	25
	174	19
		20
	176	2
	178	15
	183	18
	190	22
		23
		24
26013-100252	10	16
	20	3
	45	4
	61	3
		6
	74	4
	76	12
	81	3
	82	14
	90	39
	108	8
	134	13
	163	24
	194	34
26013-100302	10	17
	63	13
	64	9
	84	2
26013-100352	94	8
26013-100402	8	12
	40	24
	41	24
	94	15
	148	16
	165	16
26013-100452	11	11
	117	20
26013-100502	17	25
	84	3
	119	17
26013-100552	118	6
26013-100652	118	30
	119	18
26013-100702	68	17
26013-100852	11	12
	113	10
26013-120202	131	18

Parts No. Index

Parts No.	Fig. No.	Ref. No.
26013-120252	53	4
	60	5
	87	51
	118	24
	119	19
	131	19
		20
		21
	132	18
	187	26
	191	49
	219	18
26013-120302	85	53
	86	4
	90	40
	92	1
	129	32
	134	14
	160	52
	164	88
	187	27
	194	35
26013-120352	39	2
	85	54
	86	5
	160	53
26013-120402	55	6
	119	20
26013-120502	119	21
26013-120702	119	22
26014-060122	7	22
	19	31
	23	10
26014-060162	19	32
	23	11
	27	9
	28	11
	29	5
	30	4
	31	7
	38	12
	68	25
	79	5
	136	25
		26
	157	4
	158	6
26014-060202	28	12
	51	22
		23

Parts No.	Fig. No.	Ref. No.
26014-080122	12	32
26014-080162	12	33
	17	26
	23	12
	30	5
	33	23
	35	10
	37	11
	69	17
26014-080202	23	13
	24	20
	32	22
		23
	33	24
		25
		26
	34	22
	35	11
	36	15
		16
	37	12
		13
	38	13
	49	23
	83	2
	107	25
		26
	159	26
26014-080252	8	11 -1
	35	12
	127	18
	128	5
26014-080302	34	23
26014-080402	34	24
26014-100202	57	26
		27
	58	14
	63	14
		15
	64	10
	68	18
	73	22
	88	43
	89	38
	118	31
	119	23
	128	9
	161	42
26014-100252	51	19
	57	28

Parts No.	Fig. No.	Ref. No.
26014-100252	57	29
		30
		31
	58	20
	62	2
		4
	68	19
		20
	69	18
	70	17
	72	4
		10
		12
	73	23
		24
	75	7
	76	13
		14
		15
		16
	78	11
		12
	113	11
	117	9
26014-100302	117	10
26022-050122	14	16
	104	17
	174	17
26023-050102	57	32
		33
26051-080002	46	19
	47	33
26076-100162	192	37
	193	31
	196	38
26076-100252	87	52
	88	50
	89	44
	161	50
	191	50
	192	48
	193	42
	196	49
26076-100302	78	13
26076-100352	148	9
	165	15
26076-100502	10	21
26076-120352	10	18
26076-120452	78	14
26076-160402	77	5

Parts No.	Fig. No.	Ref. No.
26076-160502	77	6
26076-160552	78	15
	82	15
26076-160702	82	16
26082-140352	185	8
26106-060162	35	6 E
26106-060202	32	24
26106-060252	33	27
	35	13
26106-060602	35	6 F
26106-080162	71	27
		28
26106-080252	33	28
	34	25
26106-080302	15	48
	46	26
	198	17
26106-080502	34	26
26106-080602	34	27
26106-080652	34	28
26106-100122	52	3
	91	30
	162	20
	195	25
26106-100162	59	6
		7
		8
		9
		10
	71	29
	118	33
26106-100252	71	30
26106-100652	7	23
26116-050202	27	10
26116-080202	129	33
26116-080252	49	24
	159	27
26116-080254	47	34
26116-080304	46	20
26116-080702	15	49
26116-100162	87	53
	88	51
	89	45
	161	51
	191	51
	192	49
	193	43
	196	50
26116-100202	47	35
26116-100652	153	4

Parts No. Index

Parts No.	Fig. No.	Ref. No.
26116-100652	186	5
26116-100752	133	16
26116-100802	129	34
26116-140352	107	43
26116-140652	43	13
26116-160302	77	7
	82	17
26116-160352	72	5
26116-160502	138	9
26347-080002	198	8
		16
26347-100002	58	15
	73	25
26366-060002	35	6 G
26367-100002	14	37
26450-050102	97	25
	98	30
	99	29
	101	24
	169	30
	170	12
		27
	173	17
	206	25
	207	30
	208	29
	210	24
	214	30
	215	12
		27
	218	17
26450-050122	105	18
26450-050182	97	26
	98	31
	99	30
	101	25
	169	31
	170	13
		28
	206	26
	207	31
	208	30
	210	25
	214	31
	215	13
		28
26450-050302	96	26
	168	38
	205	27
	213	38

Parts No.	Fig. No.	Ref. No.
26450-050502	100	22
	172	22
	209	22
	217	22
26450-060162	104	18
	174	18
26450-060302	126	33
26450-060652	96	27
	168	39
	205	28
	213	39
26450-120402	84	5
26476-050142	66	12
26557-030122	144	25
26557-050122	76	17
26559-050202	71	31
26587-040062	49	28
26587-040122	46	21
26657-080002	69	19
26706-100002	7	24
26716-060002	16	12
	17	23
	34	29
	190	25
26716-080002	16	13
	34	30
	46	22
	47	36
	96	47
	167	36
	205	47
	212	36
26716-100002	107	27
	129	35
	133	17
	153	5
	186	6
26716-120002	10	19
26716-140002	43	14
26716-180002	130	10
26756-060002	129	36
26756-080002	49	25
	159	28
27260-520000	43	11
41800-210040	1	17
41851-000110	90	29
		31
	91	28
	108	2
		7

Parts No.	Fig. No.	Ref. No.
41851-000110	109	3
	111	2
		7
		14
		16
	115	2
	116	2
		4
		12
	120	2
		7
		9
	121	2
		2 -1
		7
		9
	122	2
		7
		13
	127	8
	162	21
	178	2
		4
		9
		16
		18
	180	2
		4
		14
		15
	181	2
		5
		7
		9
	182	2
		5
		7
		9
	183	3
		5
		19
	184	2
		7
		13
	194	26
41851-000140	109	12
	110	3
		5
		9
		14

Parts No.	Fig. No.	Ref. No.
41851-000140	110	16
		20
		23
		25
	115	4
	116	6
		10
	118	10
		12
	177	3
		5
		9
		14
		16
		20
		23
		25
	180	6
		11
	183	20
41851-000180	108	4
	110	18
	116	13
	119	24
	124	2
	177	18
	180	16
772458-82231	185	14
933110-54100	46	23
	47	37
	49	26
	159	29
933111-20200	87	38
	88	44
	161	43
933111-23600	40	22
	41	22
933111-26600	87	30
933111-73800	42	8
933125-94500	88	35
	161	32
933147-03400	87	54
	88	52
	89	46
	161	52
	191	52
	192	50
	193	44
	196	51
933147-08501	138	10

Parts No. Index

Parts No.	Fig. No.	Ref. No.
933152-02710	107	28
933166-24240	37	14
933168-14170	87	55
	88	53
	89	47
	161	53
	191	53
	192	51
	193	45
	196	52
933169-15231	24	21
	146	38
933171-13691	40	23
	41	23
	189	9
933171-15801	17	24
	190	26
933171-18750	76	18
933171-29751	129	37
	133	18
	134	15
	153	6
	186	7
	187	28

Parts No.	Fig. No.	Ref. No.

Parts No.	Fig. No.	Ref. No.

Parts No.	Fig. No.	Ref. No.