YANMAR

PARTS CATALOG

0CK20-M39601EN

Last update Nov., 2017

PREFACE

1. This parts catalog is the 1st revised edition of Yanmar Wheel loader V3-5A(for Japan) & the 1st edition of V3-5B, V4-5B, V5-B(for Japan).

2. Parts catalog history

	Parts catalog No.	Date of issue	Remarks
First edition	000Y00K3960	Aug.,2004	No need
1st edition(supplement)	000Y00K3961	Dec.,2005	

3. Model name

SECTION	Column	Model name	Manufactured	M/#	Remarks
Ⅰ(Vehicle)	A	V3-5A	2004/7～	53001～	
	B	V3-5B	2005/7～	53501～	
	C	V4-5B	2005/7～	52501～	
	D	V5-B	2005/9～	02501～	
Ⅱ(Engine)	A	3TNV84-XKAH	2004/6～	10232～	for V3-5A,-5B
Ⅲ(Engine)	A	3TNV84T-XKAH	2003/3～	03222～	for V4-5B,V5-B

4. This parts catalog does not contain the technical data needed for maintenance service.

   The illustrations used in this parts catalog have been simplified for clarity.

   The contents of this parts catalog are subject to change without notice.

   Be sure to use only Yanmar genuine part for repairs.If imitation parts are used, it may cause engine defects.

Directions for the Parts Catalog.

1.The parts stipulated in this Parts Catalog are not necessarily standard equipped parts.
2.Parts may change without prior notice.
3.The following is an example of the Parts Catalog format.

0CF10-G21601 29. FUEL INJECTION PUMP(W/BOOST)

(A)=4JH-DT
(B)=4JH-DTZ
(C)=4JH-DTZP
(D)=4JH-DTZA
(E)=4JH-DTZY
(F)=

① REF.	② LEV.	PARTS NO.	DESCRIPTION	Q'TY (A)	(B)	(C)	(D)	(E)	(F)	③ I	⑤ R
1	1	729595-51390	FUEL INJECTION PUMP	1	1	1	1	1			1
1-1	1	729595-51391	FUEL INJECTION PUMP	1	1	1	1	1		N	1
	(A=E00185)	(B=E00200)									
3	2	26022-060162	SCREW M 6X 16	9	9	9	9	9			
3-1 ④	2	26022-060162	SCREW M 6X 16	4	4	4	4	4		K	
	(A=E00156)	(B=E00156)	(C=E00156) (D=E00156)	(E=E00156)							
4	2	129470-51040	CAMSHAFT	1	1	1	1	1			
5	2	122710-51050	BEARING, ROLLER	2	2	2	2	2			
6	2	129470-51060	RETAINER	1	1	1	1	1			

Remarks
(1) BOOST COMPEMSATOR TYPE. OPTIONAL
PART, TO E00155,(4JH-DT, 4JH-DTZ

① Ref. No.

The Ref. No. listed may not be in accordance with the illustration Ref. No.

(Ex.) Illustration No. 1 — List Ref No. 1 (Before change) → 1- 1 (After change)

For interchangeable symbols N, R and K, illustrations for new parts may be abbreviated.

② Lev. (Level)

Level indication
The numbers below indicate the level of relativity towards the main part.
1 ----- Main parts (Assembly parts)
2 ----- Sub component included in " 1 ".
3 ----- Sub component included in " 2 ".
Note) Parts that are not for sale are partially illustrated but not listed.

③ Interchangeability Mark

When a part change takes place, one of the following interchangeability symbols is indicated beside the part.

Symbol	Interchangeability	Contents note
N	Old ← Yes / → No New	New Part is interchangeable for Old Part but Old Part is not interchangeable for New Part.
Q	Old ← No / → Yes New	New Part is not interchangeable for Old Part but Old Part is interchangeable for New Part.
R	Old ← Yes / → Yes New	New/ Old Parts are both interchangeable.
S	Old ← No / → No New	New/ Old Parts are both not interchangeable.
W		Part newly added.
Z		Part discontinued.
F		Not interchangeable by a single part but interchangeable together with related parts.
K		Changes only for used parts quantities.

④ Effective Machine No.

When a part changes, the effective Machine No. will be indicated in the (A)-(F) column.

Product Symbol	Product No.	Product Symbol	Product No.
C	Clutch No. Compressor No.	F	Machine No. (Agricultural Equip.)
D	Drive No.	M	Machine No.
E	Engine No.		

Note 1) A date may follow the symbol. (Ex.) 1996.01
Note 2) " XXXXX " and " ZZZZZ " are for parts that could not be predicted or for engine models that could not be identified.
Note 3) (A=E00185) is the E (Engine Serial Number) for the column (A) model (in this case 4JH-DT) after the parts design change.

⑤ Remarks Mark

Figures or alphabets (symbols) are entered in the remarks column.
The comments (remarks) on parts that are indicated at the bottom of the illustration are the same symbols as those stated above.

P/C NEWS No:Y00K3961-2
PUBLISHED:2007/3

1 [本機塗装色] [PAINTED COLOR LIST]

V3-5B

(旧色 OLD COLOR　M／#53501～M／#53660)

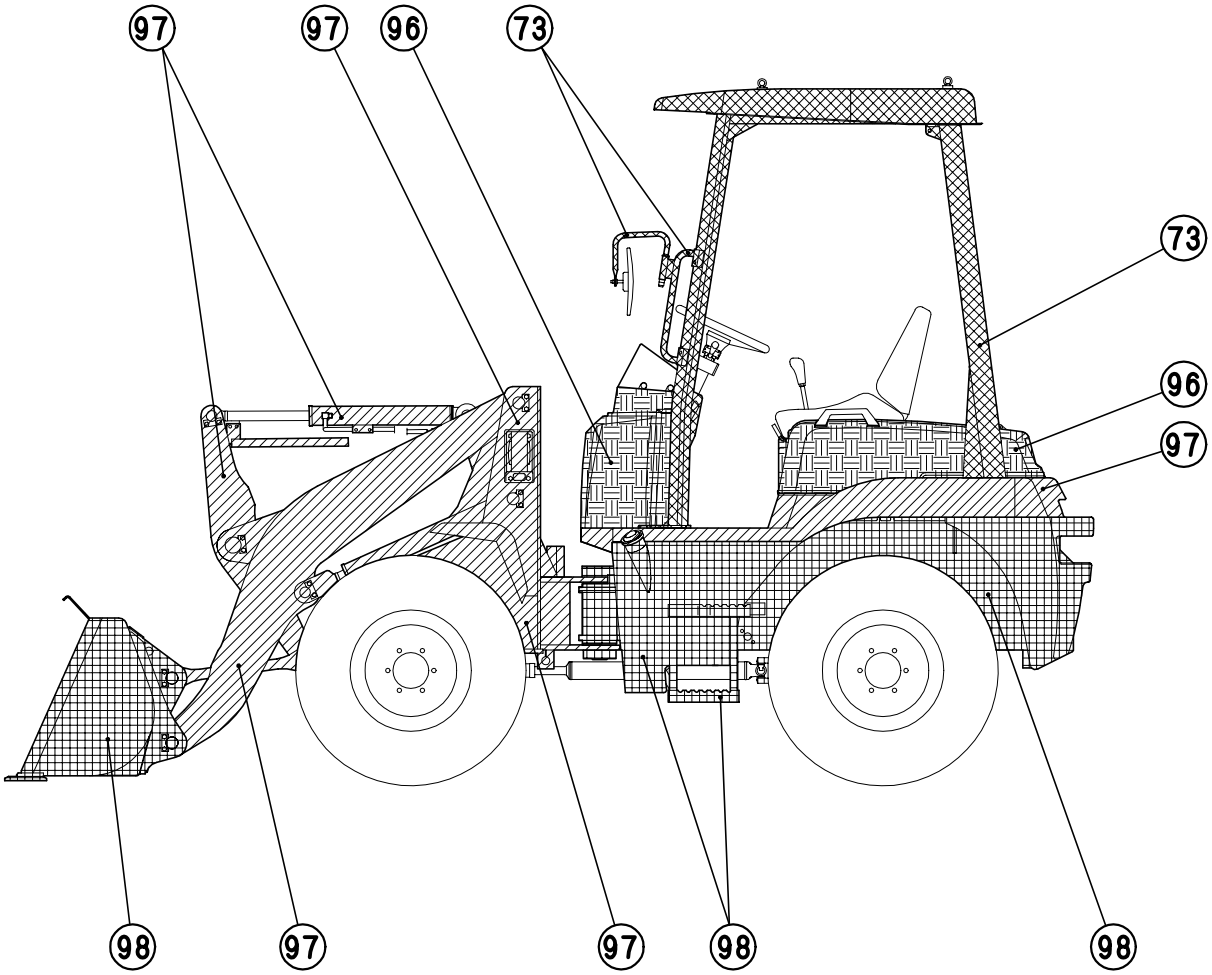

色区分 COLOR CODE	表示 DESCRIPTION	塗装色 マンセル記号 PAINTED COLOR MUNSEL No.1	塗料部品番号 PAINT PART No.		
			16ℓ缶 16ℓCAN	4ℓ缶 4ℓCAN	スプレー SPRAY
97		ヤンマーピーコックグリーン YANMAR PEACOCK GREEN 2.99BG5.27/9.28	981101-09597	977620-40970	977620-30971
96		ヤンマーシトラスグリーン YANMAR CITRUS GREEN 4.84GY8.42/6.99	981101-09599	977620-40990	977620-30991
98		ヤンマーオーシャングリーン YANMAR OCEAN GREEN 7.53BG3.03/7.57	981101-09598	977620-40980	977620-30981
73		ヤンマーワームグレー YANMAR WARM GRAY 5.52Y4.91/1.09	----------	----------	TOR-90450003

1 [本機塗装色]
[PAINTED COLOR LIST]

V3-5B

（新色 NEW COLOR　　M／#53661～）

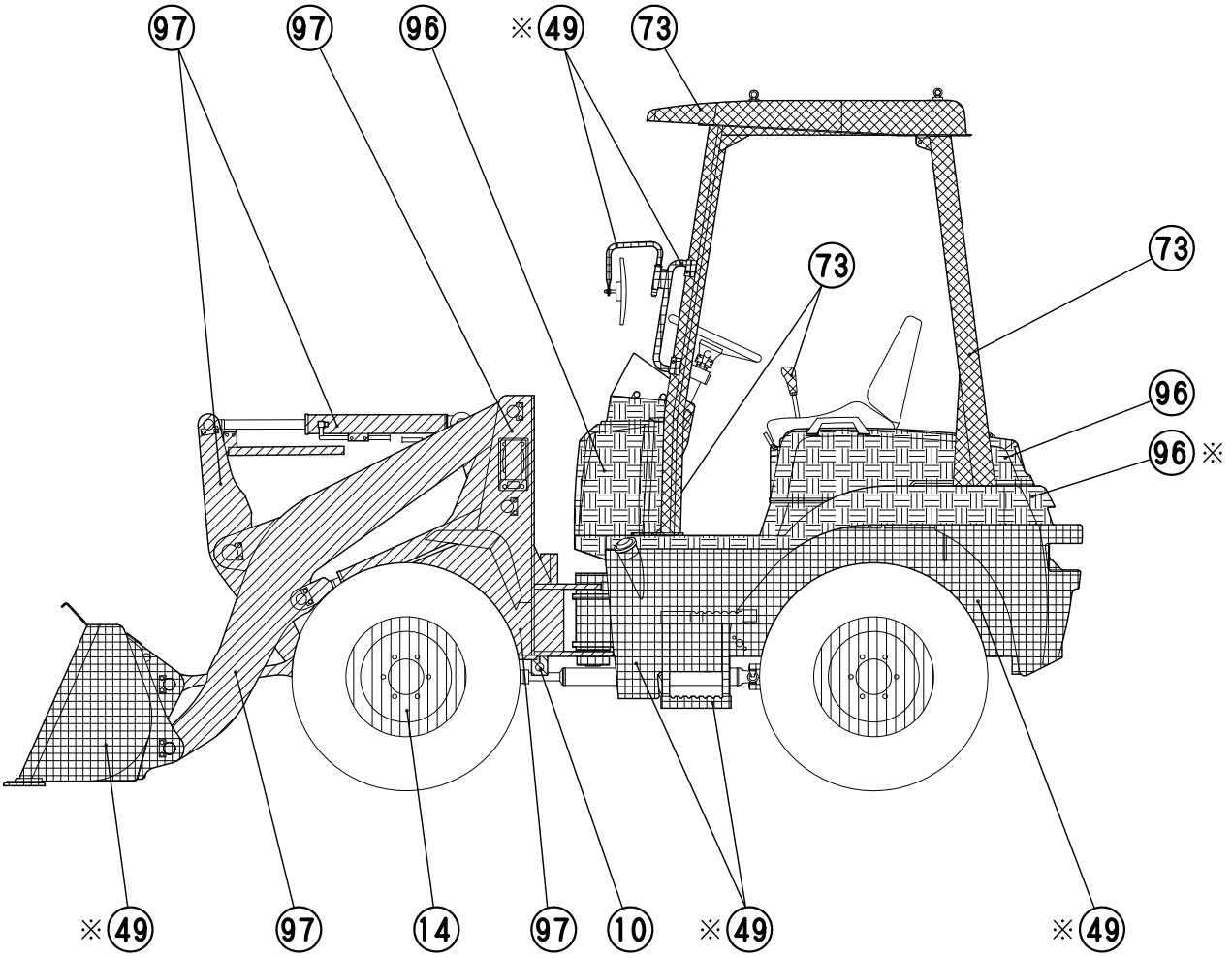

※印部が旧型式より変更された色です。
symbol signifies a color change from the old model.

色区分 COLOR CODE	表示 DESCRIPTION	塗装色 PAINTED COLOR	塗料部品番号 PAINT PART No.		
			16ℓ缶 16ℓCAN	4ℓ缶 4ℓCAN	スプレー SPRAY
97		ヤンマーピーコックグリーン YANMAR PEACOCK GREEN	981101-09597	977620-40970	977620-30971
96		ヤンマーシトラスグリーン YANMAR CITRUS GREEN	----------	977620-40990	977620-30991
49		ヤンマーネイビーグレー YANMAR NAVY GRAY	----------	TOR-91390000	TOR-94800490
73		ヤンマーワームグレー YANMAR WARM GRAY	----------	TOR-91450000	TOR-94800730
10		ヤンマーレッド2 YANMAR RED2	----------	TOR-91000002	TOR-94800100
14		ヤンマーホワイト YANMAR WHITE	----------	TOR-91250001	TOR-94800140

絵目次（1）・・・・・・・主要部品
PICTURESQUE INDEX(1)・・・MAIN PARTS

銘板・・・FIG. 1
LABEL
安全銘板・・・FIG. 2
SAFETY LABEL

フートアクセル・・・FIG. 6
FOOT ACCELERATOR
インチングペダル・・・FIG. 26
INCHING PEDAL
ブレーキペダル・・・FIG. 27
BRAKE PEDAL
パーキングブレーキレバー・・・FIG. 28
PARK BRAKE LEVER
油圧コントロールレバー・・・FIG. 29
HYDRAULIC OIL CONTROL LEVER
3RDバルブコントロール・・FIG. 30
3RD VALVE CONTROL
ステアリング&コラム・・・FIG. 31
STEERING WHEEL & COLUMN
コントロールカバー・・FIG. 32, 33
CONTROL COVER
フロントフレーム・・・FIG. 34
FRONT FRAME

サイレンサ・・・FIG. 4
SILENCER
エアクリーナ&エンジンドレン・・・FIG. 5
AIR CLEANER & ENGINE DRAIN
エンジンマウント・・・FIG. 7
ENGINE MOUNT
ラジエータ・・・FIG. 8
RADIATOR
バッテリ・・・FIG. 10
BATTERY
ワイヤリング・・・FIG. 11
WIRING
電装品・・・FIG. 12, 13
ELECTRIC PART
作動油タンク・・・FIG. 55
HYDRAULIC OIL TANK

バックミラー・・・FIG. 3
BACK MIRROR

リアフレーム・・・FIG. 35
REAR FRAME
オペフレーム&カバー・・・FIG. 36
OPERATION FRAME & COVER
シート&ボンネット・・FIG. 37
SEAT & BONNET
ボンネット防音材・・・FIG. 38
BONNET SOUNDPROOF MATERIAL
フレーム防音材・・・FIG. 39
FRAME SOUNDPROOF MATERIAL

ダンプシリンダ・・・FIG. 46
DUMP CYLINDER

タイヤ&ディスク・・・Fig. 23
TIRE & DISK
タイヤ（オプション）・・・Fig. 24, 25, 69
TIRE (OPTIONAL)

右
RIGHT

後
REAR

左
LEFT

前
FRONT

燃料タンク・・・FIG. 9
FUEL TANK
PSシリンダ・・・FIG. 47
POWER STEERING CYLINDER
油圧ポンプ・・・FIG. 48, 49
HST PUMP
油圧モータ・・・FIG. 50, 51
HST MOTOR
ステアリングユニット・・・FIG. 52
STEERING UNIT
コントロールバルブ・・・FIG. 53, 54
CONTROL VALVE
フィルタ&フィッティング・・FIG. 56
FILTER & PIPE FITTING

油圧配管（HST）・・・FIG. 57, 58
HYD. OIL PIPING(HST)
油圧配管（ローダー）・・FIG. 59
HYD. OIL PIPING(LOADER)

油圧配管（3RD）・・FIG. 60
HYD. OIL PIPING(3RD)

リフトシリンダ・・・FIG. 45
LIFT CYLINDER

リフトアーム・・・Fig. 61
LIFT ARM
ローダーリンク・・・Fig. 62
LOADER LINK
バケット・・・Fig. 63, 74～76
BUCKET
バケット&マニアフォーク（アタッチメント）・・・Fig. 65
BUCKET & MANIAFORK(ATTACHMENT)
バケット（オプション）・・・Fig. 77～90
BUCKET(OPTIONAL)

クラッチハウジング&ドライブシャフト・・・FIG. 14
CLUTCH HOUSING & DRIVE SHAFT
トランスファケース・・・FIG. 15
TRANSFER CASE
スパイラルベベルギヤ・・・FIG. 16
SPIRAL BEVEL GEAR
デファレンシャルギヤ・・・FIG. 17
DIFFERENTIAL GEAR
アクスルシャフト・・・FIG. 18
AXLE SHAFT
ファイナルギヤ・・・FIG. 19
FINAL GEAR
アクスルケース・・・FIG. 20
AXLE CASE
アクスルホルダ・・・FIG. 21
AXLE HOLDER
センターブレーキ・・・FIG. 22
CENTER BRAKE

キャノピ・・・FIG. 40
CANOPY
キャビン・・・FIG. 41
CABIN
キャビンドア・・・FIG. 42
CABIN DOOR
電装品&ワイパー・・・FIG. 43
ELECTRIC PART & WIPER
ヒータ・・・FIG. 44
HEATER

絵目次（2）・・・・・・・・・・・・・油圧関係
PICTURESQUE INDEX(2)・・・・・・HYDRAULIC SECTION

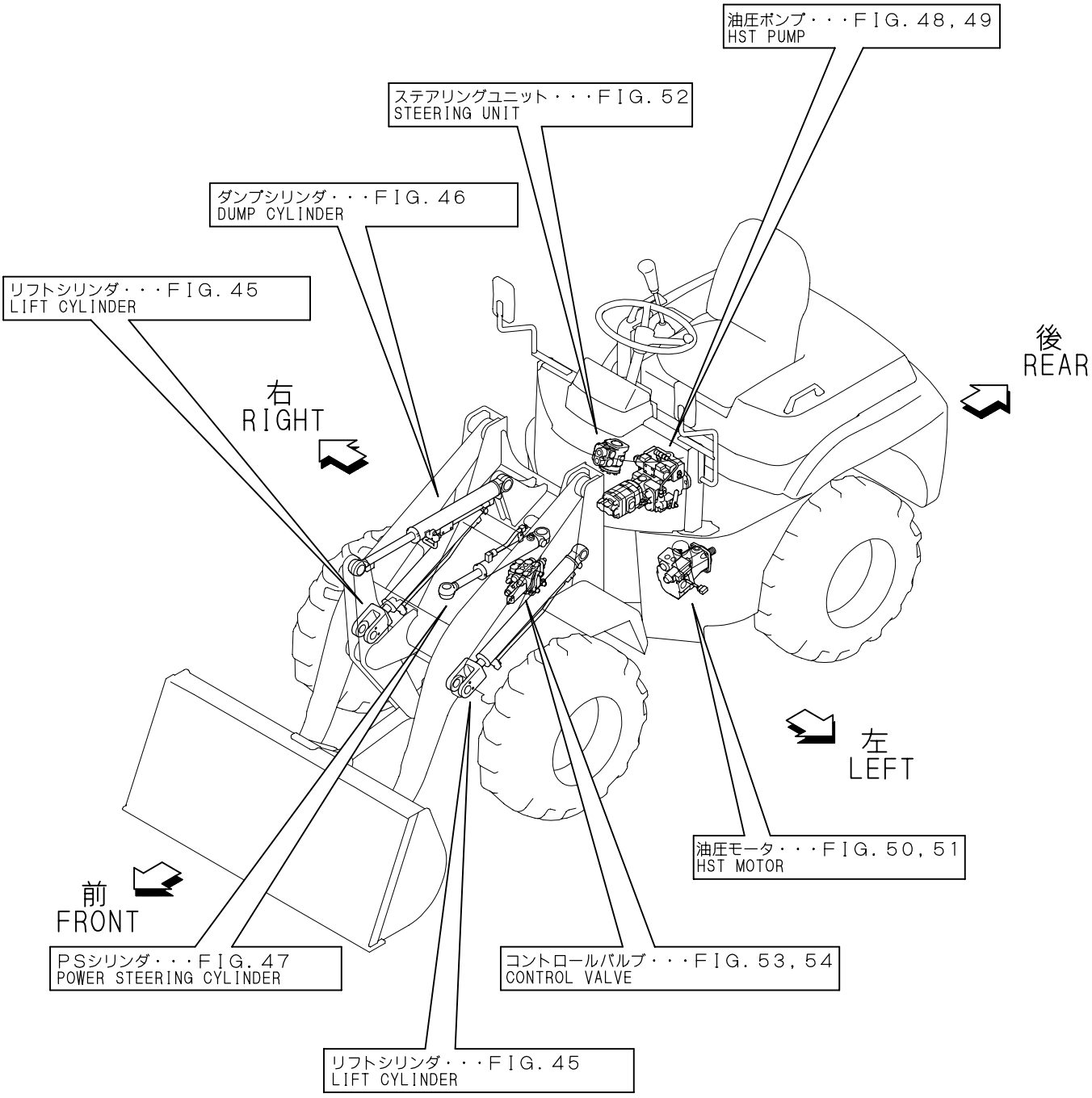

Contents

0CK20-M39601

Fig. No.	Fig. Name
V3/4-5A,B,V5-B(JP)	
1.	LABEL
2.	SAFETY LABEL
3.	BACK MIRROR
4.	SILENCER
5.	AIR CLEANER & ENGINE DRAIN
6.	FOOT ACCELERATOR
7.	ENGINE MOUNT
8.	RADIATOR
9.	FUEL TANK
10.	BATTERY
11.	WIRING
12.	ELECTRIC PART
13.	ELECTRIC PART(AUTO LEBELLER)
14.	CLUTCH HOUSING & DRIVE SHAFT
15.	TRANSFER CASE
16.	SPIRAL BEVEL GEAR
17.	DIFFERENTIAL GEAR
18.	AXLE SHAFT
19.	FINAL GEAR
20.	AXLE CASE
21.	AXLE HOLDER
22.	CENTER BRAKE
23.	TIRE & DISKE
24.	SNOW TIRE(OPTIONAL)
25.	TIRE(PLATED)(OPTIONAL)
26.	INCHING PEDAL
27.	BRAKET PEDAL
28.	PARK BRAKE LEVER
29.	HYD.OIL CONTROL LEVER
30.	3RD VALVE CONTROL
31.	STEERING WHEEL & COLUMN
32.	CONTROL COVER
33.	CONTROL COVER(3RD)
34.	FRONT FRAME
35.	REAR FRAME
36.	OPERATION FRAME & COVER
37.	SEAT & BONNET
38.	BONNET SOUNDPROOF MATERIAL
39.	FRAME SOUNDPROOF MATERIAL
40.	CANOPY
41.	CABIN
42.	CABIN DOOR
43.	ELECTRIC PART & WIPER(CABIN)
44.	HEATER(CABIN)
45.	LIFT CYLINDER
46.	DUMP CYLINDER
47.	POWER STEERING CYLINDER
48.	HST PUMP
49.	HST PUMP

Contents

0CK20-M39601

Fig. No.	Fig. Name
70.	(49A)HST PUMP(COMPONENT PART)
71.	(49B)HST PUMP(COMPONENT PART)
50.	HST MOTOR
51.	HST MOTOR
72.	(51A)HST MOTOR(COMPONENT PART)
73.	(51B)HST MOTOR(COMPONENT PART)
52.	STEERING UNIT
53.	CONTROL VALVE(2-WAY)
54.	CONTROL VALVE(3-WAY)
55.	HYD.OIL TANK
56.	FILTER & FITTING
57.	HYD.OIL PIPING(HST)
58.	HYD.OIL PIPING(HST)
59.	HYD.OIL PIPING(LOADER)
60.	HYD.OIL PIPING(3RD)
61.	LIFT ARM
62.	LOADER LINK
63.	BUCKET
74.	(63A)BUCKET(0.4)
75.	(63B)BUCKET(0.5)
76.	(63C)BUCKET(0.6)
64.	ATTACH HOLDER(ATTACHMENT)
65.	BUCKET&MANIA FORK(ATTACHMENT)
66.	PALLET FORK(ATTACHMENT)
67.	WINDOW WASHER(OPTIONAL)

Fig. No.	Fig. Name
68.	TOOL(OPTIONAL)
69.	UNIQUE TIRE(OPTIONAL)
77.	BUCKET(0.5) KIT(OPTIONAL)
78.	BUCKET(0.6)KIT(OPTIONAL)
79.	BUCKET(0.8)KIT(OPTIONAL)
80.	BUCKET(0.9) KIT(OPTIONAL)
81.	BUCKET(0.6)(PLATING)KIT(OPTIONAL)
82.	BUCKET(0.8)(PLATING) KIT(OPTIONAL)
83.	BUCKET(0.9)(PLATING) KIT(OPTIONAL)
84.	BUCKET(0.4)(QUICK HOLDER) KIT(OPTIONAL)
85.	BUCKET(0.5)(QUICK HOLDER) KIT(OPTIONAL)
86.	BUCKET(0.6)(QUICK HOLDER) KIT(OPTIONAL)
87.	BUCKET(0.5)(QUICK HOLDER)KIT(OPTIONAL)
88.	BUCKET(0.6)(QUICK HOLDER) KIT(OPTIONAL)
89.	BUCKET(0.8)(QUICK HOLDER) KIT(OPTIONAL)
90.	BUCKET(0.9)(QUICK HOLDER) KIT(OPTIONAL)

Fig.1. LABEL

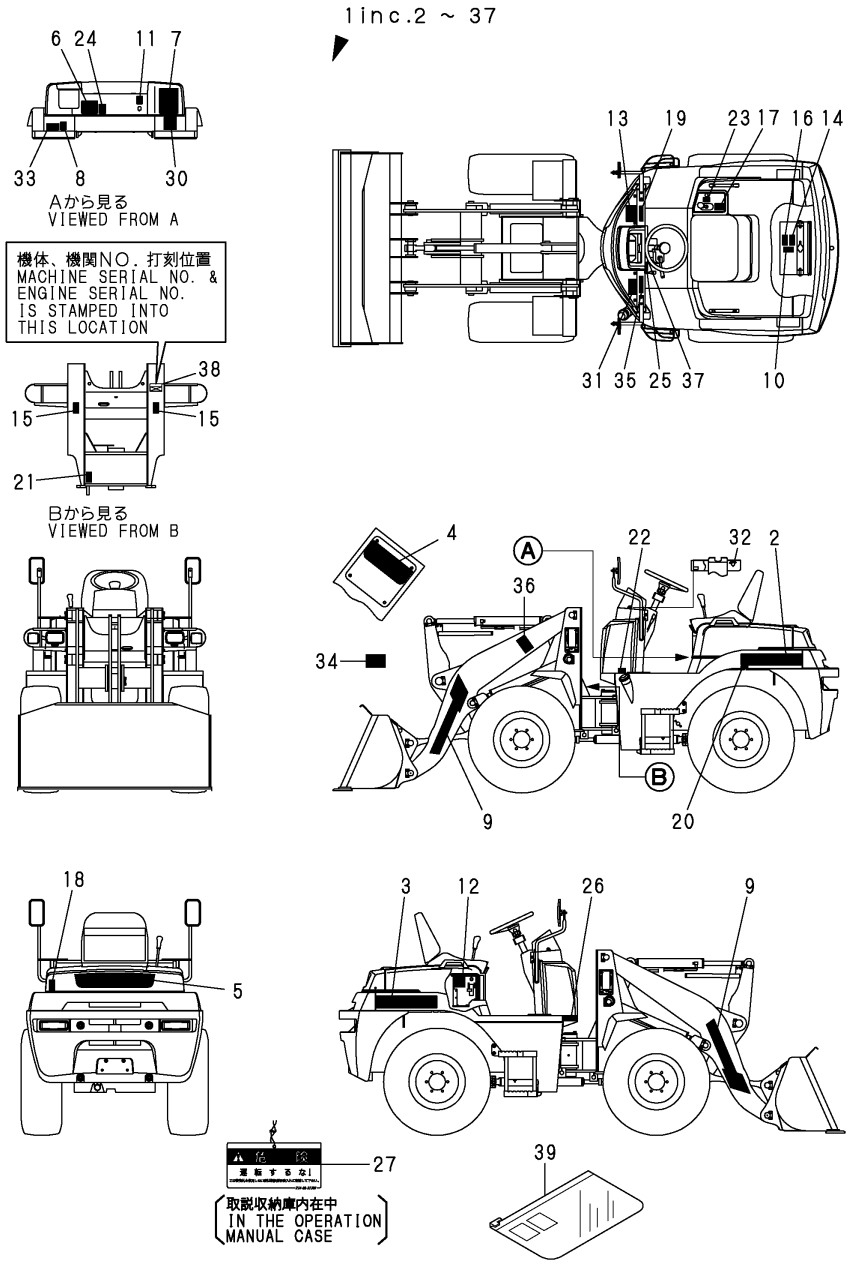

(A)=V3-5A (D)=V5-B
(B)=V3-5B (E)=
(C)=V4-5B (F)=

No.	Lev.	Parts No.	Description	Q'ty (A)	(B)	(C)	(D)	(E)	(F)	I	R
1	1	772527-03102	LABEL ASSY	1							
1A	1	772534-03100	LABEL ASSY		1						
1B	1	772535-03100	LABEL ASSY			1					
1C	1	772536-03100	LABEL ASSY				1				
2	2	172527-03110	LABEL	1	1						
2A	2	172528-03110	LABEL			1					
2B	2	172529-03110	LABEL				1				
3	2	172527-03120	LABEL	1	1						
3A	2	172528-03120	LABEL			1					
3B	2	172529-03120	LABEL				1				
4	2	172527-03130	LABEL	1	1	1	1				
5	2	172527-03140	LABEL	1	1	1	1				
6	2	172527-03180	LABEL	1							
6-1	2	172527-03181	LABEL, SPECIFICATION	1						N	
	(A=M/#53068)										
6A	2	172534-03100	LABEL,SPECIFICATION		1						
6B	2	172535-03100	LABEL,SPECIFICATION			1					
6C	2	172536-03100	LABEL,SPECIFICATION				1				
7	2	172527-03170	LABEL	1	1						
7A	2	172528-03170	LABEL			1	1				
8	2	172141-03182	LABEL	1	1	1	1				
9	2	172169-03180	LABEL	2	2	2	2				
10	2	172444-03190	LABEL	1	1	1	1				
11	2	172141-03202	LABEL,CAUTION	1	1	1	1				
12	2	172444-03200	LABEL,BATTERY	1	1	1	1				
13	2	172527-03210	LABEL	1	1	1	1				
14	2	172444-03220	LABEL	1	1	1	1				
15	2	172527-03220	LABEL	2	2	2	2				
16	2	172444-03230	LABEL	1	1	1	1				
17	2	172511-03230	LABEL	1	1	1	1				
18	2	172527-03230	LABEL	1	1	1	1				
19	2	172444-03240	LABEL	1	1	1	1				
20	2	172527-03340	LABEL	1	1						
20A	2	172528-03340	LABEL			1	1				
21	2	172527-03240	LABEL	1	1	1	1				
22	2	172183-03250	LABEL,FUEL	1	1	1	1				
23	2	172524-03290	LABEL, LEVER LOCK	1	1	1	1				
24	2	172155-03310	LABEL, OILING	1	1	1	1				
25	2	172527-03310	LABEL	1	1	1	1				
26	2	172519-03341	LABEL	1	1	1	1				
27	2	172964-03481	TAG ASSY, CAUTION	1	1	1	1				
30	2	172164-03510	LABEL,LOADING	1	1	1	1				
31	2	172164-03540	LABEL	1	1	1	1				
32	2	172141-03360	LABEL, START SWITCH	1	1	1	1				
33	2	172142-03302	LABEL,CAUTION	1	1	1	1				
34	2	172490-03160	LABEL	1	1	1	1				
35	2	172530-03210	LABEL	1	1	1	1				
36	2	172530-03220	LABEL	2	2	2	2				
37	2	172530-03230	LABEL	1	1	1	1				
38	1	172519-04350	SCREW	4	4	4	4				
39	1	172176-07330	BAG, MANUAL	1	1	1	1				

N:Old $\xleftarrow[\text{No}]{\text{Yes}}$ New, Q:Old $\xleftarrow[\text{Yes}]{\text{No}}$ New, R:Old $\xleftarrow[\text{Yes}]{\text{Yes}}$ New, S:Old $\xleftarrow[\text{No}]{\text{No}}$ New, W:Add, Z:Discontinued, F:Interchangeable by set, K:Q'ty Change

Copyright (C) YANMAR CO., LTD. All RightsReserved.

Fig.2. SAFETY LABEL

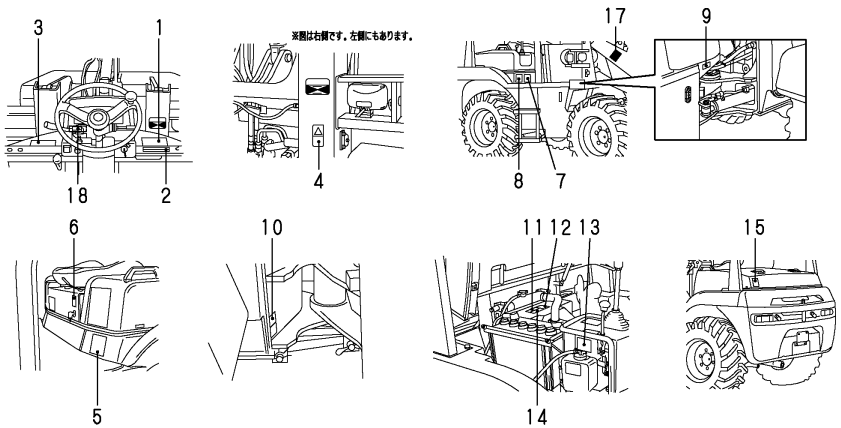

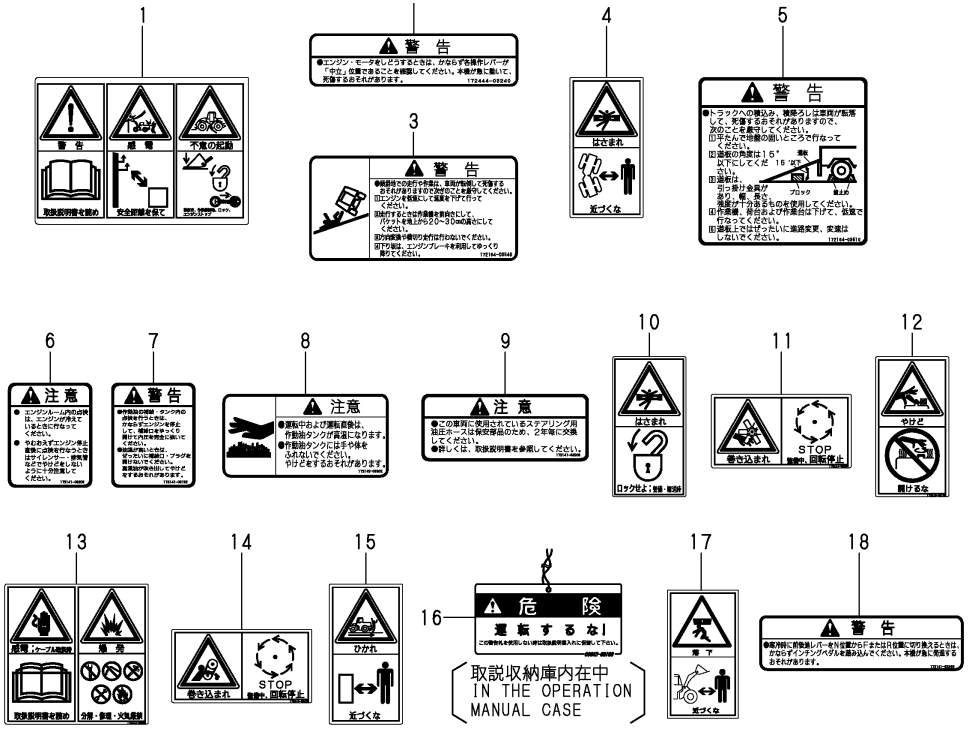

(A)=V3-5A (D)=V5-B
(B)=V3-5B (E)=
(C)=V4-5B (F)=

No.	Lev.	Parts No.	Description	Q'ty (A)	(B)	(C)	(D)	(E)	(F)	I	R
1	1	172527-03210	LABEL	1	1	1	1				
2	1	172444-03240	LABEL	1	1	1	1				
3	1	172164-03540	LABEL	1	1	1	1				
4	1	172527-03220	LABEL	2	2	2	2				
5	1	172164-03510	LABEL,LOADING	1	1	1	1				
6	1	172141-03202	LABEL,CAUTION	1	1	1	1				
7	1	172141-03182	LABEL	1	1	1	1				
8	1	172142-03302	LABEL,CAUTION	1	1	1	1				
9	1	172519-03341	LABEL	1	1	1	1				
10	1	172527-03240	LABEL	1	1	1	1				
11	1	172444-03220	LABEL	1	1	1	1				
12	1	172444-03190	LABEL	1	1	1	1				
13	1	172444-03200	LABEL,BATTERY	1	1	1	1				
14	1	172444-03230	LABEL	1	1	1	1				
15	1	172527-03230	LABEL	1	1	1	1				
16	1	172964-03481	TAG ASSY, CAUTION	1	1	1	1				
17	1	172530-03220	LABEL	2	2	2	2				
18	1	172530-03230	LABEL	1	1	1	1				

N:Old $\xleftarrow[\text{No}]{\text{Yes}}$ New, Q:Old $\xleftarrow[\text{Yes}]{\text{No}}$ New, R:Old $\xleftarrow[\text{Yes}]{\text{Yes}}$ New, S:Old $\xleftarrow[\text{No}]{\text{No}}$ New, W:Add, Z:Discontinued, F:Interchangeable by set, K:Q'ty Change

Copyright (C) YANMAR CO., LTD. All RightsReserved.

Fig.3. BACK MIRROR

P/C NEWS No:Y00K3961-2
PUBLISHED:2007/3

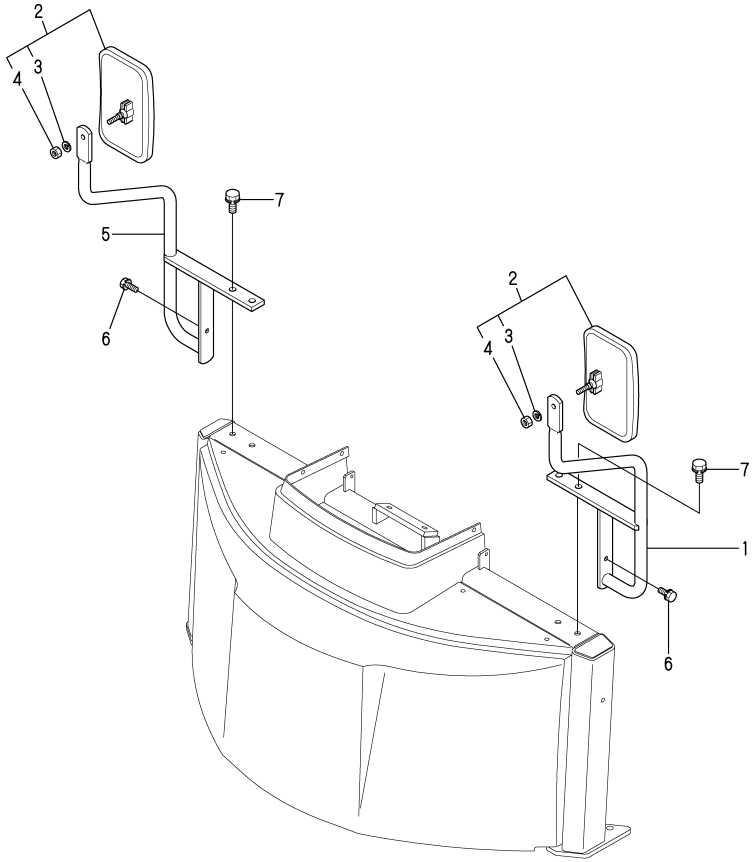

(A)=V3-5A (D)=V5-B
(B)=V3-5B (E)=
(C)=V4-5B (F)=

No.	Lev.	Parts No.	Description	Q'ty (A)	(B)	(C)	(D)	(E)	(F)	I	R
1	1	172527-06510	STAY, MIRROR	1	1	1	1				1
1-1	1	172527-06510-1	STAY, MIRROR (B=M/#53661)		1					S	1
2	1	172524-06750	MIRROR COMP.	2	2	2	2				1
3	2	22217-080000	WASHER, SPRING 8	2	2	2	2				1
4	2	26716-080002	NUT, M8	4	4	4	4				1
5	1	172527-06610	STAY, MIRROR	1	1	1	1				1
5-1	1	172527-06610-1	STAY, MIRROR (B=M/#53661)		1					S	1
6	1	26013-080202	BOLT, M8X 20	2	2	2	2				1
7	1	26013-100302	BOLT, M10X 30	4	4	4	4				1

Remarks
(1)FOR STANDARD VEHICLE SPEC.(W/O CANOPY & CABIN)
PLEASE REFER TO FIG.40(CANOPY SPEC.)OR FIG41(CABIN SPEC.).

N:Old $\xleftarrow[\text{No}]{\text{Yes}}$ New, Q:Old $\xleftarrow[\text{Yes}]{\text{No}}$ New, R:Old $\xleftarrow[\text{Yes}]{\text{Yes}}$ New, S:Old $\xleftarrow[\text{No}]{\text{No}}$ New, W:Add, Z:Discontinued, F:Interchangeable by set, K:Q'ty Change

Copyright (C) YANMAR CO., LTD. All RightsReserved.

Fig.4. SILENCER

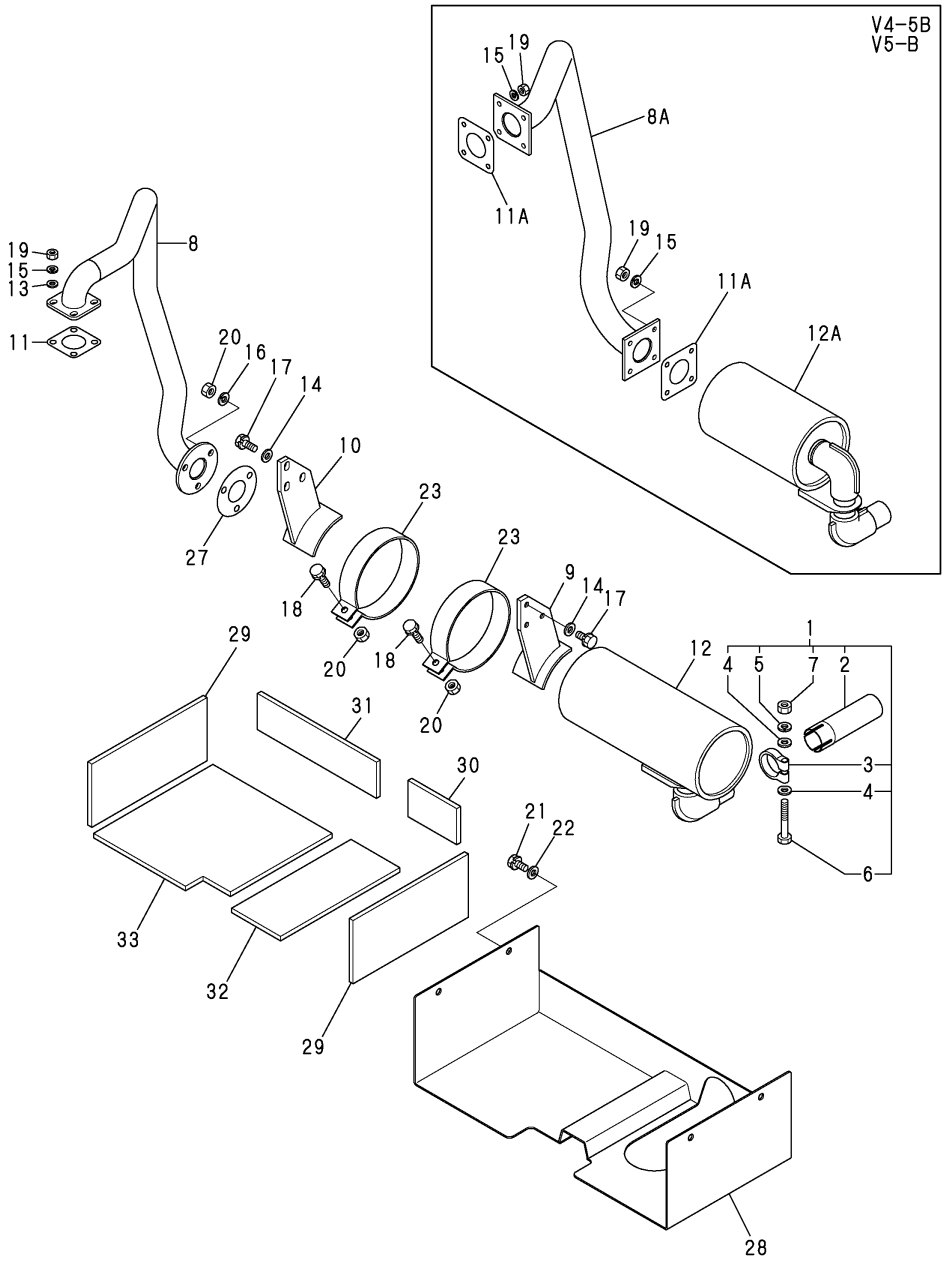

(A)=V3-5A (D)=V5-B
(B)=V3-5B (E)=
(C)=V4-5B (F)=

No.	Lev.	Parts No.	Description	Q'ty (A)	(B)	(C)	(D)	(E)	(F)	I	R
1	1	172520-11300	PIPE, TAIL	1	1	1	1				
2	2	172520-11350	PIPE, TAIL	1	1	1	1				
3	2	121120-13580	CLAMP	1	1	1	1				
4	2	22137-100000	WASHER, 10	2	2	2	2				
5	2	22217-100000	WASHER, SPRING 10	1	1	1	1				
6	2	26116-100652	BOLT, M10X 65 PLATED	1	1	1	1				
7	2	26716-100002	NUT, M10	1	1	1	1				
8	1	172527-11310	PIPE, CONNECTING	1	1						
8A	1	172528-11310	PIPE, CONNECTING			1	1				
9	1	172527-11320	BRACKET L	1	1	1	1				
10	1	172527-11330	BRACKET R	1	1	1	1				
11	1	124701-11911	GASKET, SILENCER	1	1						
11A	1	129400-13201	GASKET, SILENCER			2	2				
12	1	119869-13501	SILENCER	1	1						
12A	1	129012-13500	SILENCER			1	1				
13	1	22137-080000	WASHER, 8	4	4	4	4				
14	1	22137-100000	WASHER, 10	6	6	6	6				
15	1	22217-080000	WASHER, SPRING 8	4	4	8	8				
16	1	22217-100000	WASHER, SPRING 10	3	3	3	3				
17	1	26013-100302	BOLT, M10X 30	6	6	6	6				
18	1	26013-100352	BOLT, M10X 35	2	2	2	2				
19	1	26716-080002	NUT, M8	4	4	8	8				
20	1	26716-100002	NUT, M10	5	5	2	2				
21	1	26013-100252	BOLT, M10X 25	4	4	4	4				
22	1	22137-100000	WASHER, 10	4	4	4	4				
23	1	172527-11340	BAND, SILENCER	2	2	2	2				
27	1	103954-13201	GASKET, SILENCER	1	1	1	1				
28	1	172527-11490	COVER, MUFFLER	1	1						
28A	1	172528-11390	COVER, MUFFLER			1	1				
29	1	172527-63350	SOUND-PROOF MFC-S	2	2						
29A	1	172528-63350	SOUND-PROOF MFC-S			2	2				
30	1	172527-63360	SOUND-PROOF MFC-RL	1						Z	
	(A=M/#53095)										
30A	1	172528-63360	SOUND-PROOF MFC-RL			1	1				
31	1	172527-63370	SOUND-PROOF MFC-RR	1	1						
31A	1	172528-63370	SOUND-PROOF MFC-RR			1	1				
32	1	172527-63380	SOUND-PROOF MFC-BL	1	1						
32A	1	172528-63380	SOUND PROOF MFC-BL			1	1				
33	1	172527-63390	SOUND-PROOF MFC-BR	1	1						
33A	1	172528-63390	SOUND PROOF MFC-BR			1	1				

N:Old $\overset{\text{Yes}}{\underset{\text{No}}{\leftrightarrows}}$ New, Q:Old $\overset{\text{No}}{\underset{\text{Yes}}{\leftrightarrows}}$ New, R:Old $\overset{\text{Yes}}{\underset{\text{Yes}}{\leftrightarrows}}$ New, S:Old $\overset{\text{No}}{\underset{\text{No}}{\leftrightarrows}}$ New, W:Add, Z:Discontinued, F:Interchangeable by set, K:Q'ty Change

Copyright (C) YANMAR CO., LTD. All RightsReserved.

Fig.5. AIR CLEANER & ENGINE DRAIN

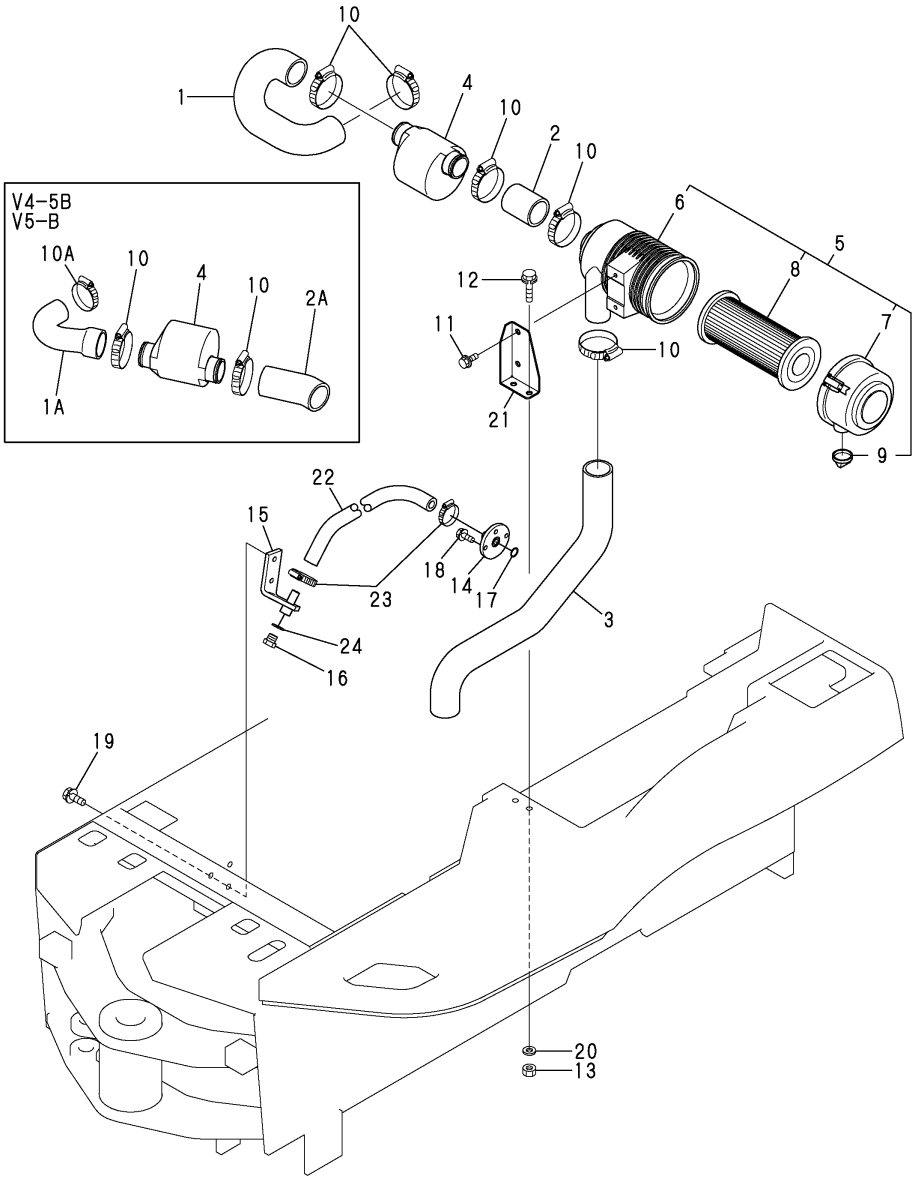

(A)=V3-5A (D)=V5-B
(B)=V3-5B (E)=
(C)=V4-5B (F)=

No.	Lev.	Parts No.	Description	Q'ty (A)	(B)	(C)	(D)	(E)	(F)	I	R
1	1	172527-11560	HOSE A	1	1						
1A	1	172528-11561	HOSE A			1	1				
2	1	172527-11570	HOSE B	1	1						
2A	1	172528-11571	HOSE B			1	1				
3	1	172527-11580	HOSE C	1	1	1	1				
4	1	121855-12060	SILENCER ASSY	1	1	1	1				
5	1	129012-12500	CLEANER ASSY, AIR	1	1	1	1				
6	2	129012-12510	BODY, AIR CLEANER	1	1	1	1				
7	2	129012-12530	COVER ASSY	1	1	1	1				
8	2	119808-12520	ELEMENT	1	1	1	1				
9	2	119808-12540	VALVE, UNLOADER	1	1	1	1				
10	1	23000-060000	CLAMP, 60	5	5	4	4				
10A	1	23000-048000	CLAMP, 48			1	1				
11	1	26013-080202	BOLT, M8X 20	2	2	2	2				
12	1	26013-100402	BOLT, M10X 40	2	2	2	2				
13	1	26716-100002	NUT, M10	2	2	2	2				
14	1	172527-11910	PLATE	1	1	1	1				
15	1	172527-11920	STAY	1	1	1	1				
16	1	23491-140002	PLUG, 14	1	1	1	1				
17	1	24311-000180	O-RING, 1AP18.0	1	1	1	1				
18	1	26013-080202	BOLT, M8X 20	3	3	3	3				
19	1	26013-100252	BOLT, M10X 25	2	2	2	2				
20	1	22137-100000	WASHER, 10	2	2	2	2				
21	1	172527-11512	BRACKET, CLEANER	1	1	1	1				
22	1	172527-11931	HOSE,LO DRAIN	1	1	1	1				
23	1	23001-025000	CLAMP, HOSE 25	2	2	2	2				
24	1	24311-000160	O-RING, 1AP16.0	1	1	1	1				

N:Old $\xleftrightarrow[\text{No}]{\text{Yes}}$ New, Q:Old $\xleftrightarrow[\text{Yes}]{\text{No}}$ New, R:Old $\xleftrightarrow[\text{Yes}]{\text{Yes}}$ New, S:Old $\xleftrightarrow[\text{No}]{\text{No}}$ New, W:Add, Z:Discontinued, F:Interchangeable by set, K:Q'ty Change

Copyright (C) YANMAR CO., LTD. All RightsReserved.

Fig.6. FOOT ACCELERATOR

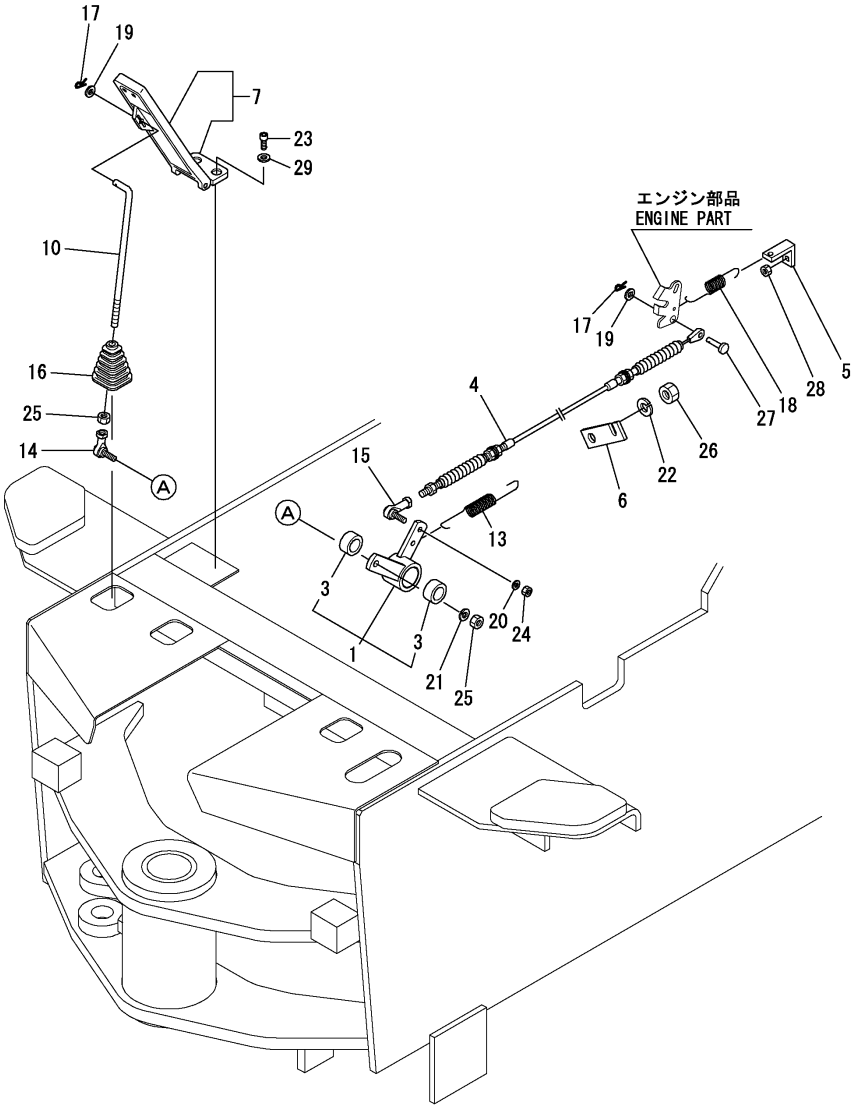

(A)=V3-5A (D)=V5-B
(B)=V3-5B (E)=
(C)=V4-5B (F)=

No.	Lev.	Parts No.	Description	Q'ty (A)	(B)	(C)	(D)	(E)	(F)	I	R
1	1	172527-12200	LEVER	1	1	1	1				
3	2	24550-025150	BUSH, 25X15	2	2	2	2				
4	1	172527-12251	WIRE	1	1	1	1				
5	1	172528-12260	HOOK, SPRING	1	1	1	1				
6	1	172524-12260	BRACKET E,WIRE	1	1	1	1				
7	1	172520-12310	PEDAL ASSY, THROTTLE	1	1	1	1				
7-1	1	172538-12310	PEDAL ASSY,ACCEL	1	1	1	1			N	
	(A=*2010.02)	(B=*2010.02)	(C=*2010.02) (D=*2010.02)								
10	1	172524-12362	ROD A ASSY, LINK	1	1	1	1				
13	1	172524-12380	SPRING, RETURN	1	1	1	1				
14	1	1E4760-43090	BALL RBL8,LINK	1	1	1	1				
15	1	172446-45820	LINK BALL 6	1	1	1	1				
16	1	172520-46150	BOOT	1	1	1	1				
17	1	1C6281-52310	PIN, SNAP 6	2	2	2	2				
18	1	1C6320-66451	SPRING, SIDE FLOAT	1	1	1	1				
19	1	22137-060000	WASHER, 6	3	3	3	3				
20	1	22217-060000	WASHER, SPRING 6	1	1	1	1				
21	1	22217-080000	WASHER, SPRING 8	1	1	1	1				
22	1	22217-120000	WASHER, SPRING 12	1	1	1	1				
23	1	26450-060162	BOLT, M6X 16	2	2	2	2				
24	1	26716-060002	NUT, M6	1	1	1	1				
25	1	26716-080002	NUT, M8	2	2	2	2				
26	1	26716-120002	NUT, M12	1	1	1	1				
27	1	172113-12522	PIN, CABLE	1	1	1	1				
28	1	26716-080002	NUT, M8	1	1	1	1				
29	1	22137-060000	WASHER, 6	2	2	2	2			W	
	(A=*2010.02)	(B=*2010.02)	(C=*2010.02) (D=*2010.02)								

N:Old $\xleftrightarrow[\text{No}]{\text{Yes}}$ New, Q:Old $\xleftrightarrow[\text{Yes}]{\text{No}}$ New, R:Old $\xleftrightarrow[\text{Yes}]{\text{Yes}}$ New, S:Old $\xleftrightarrow[\text{No}]{\text{No}}$ New, W:Add, Z:Discontinued, F:Interchangeable by set, K:Q'ty Change

Copyright (C) YANMAR CO., LTD. All RightsReserved.

Fig.7. ENGINE MOUNT

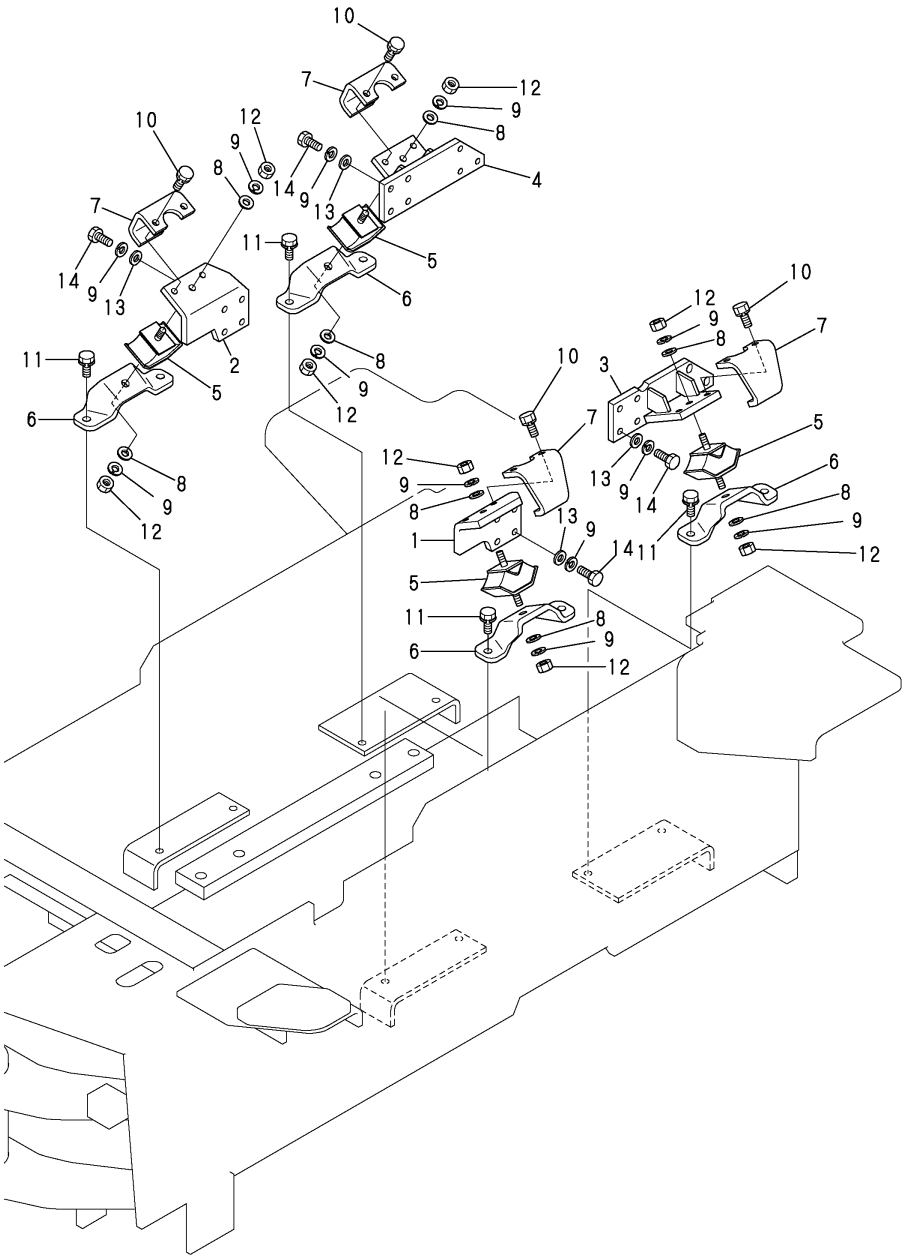

(A)=V3-5A (D)=V5-B
(B)=V3-5B (E)=
(C)=V4-5B (F)=

No.	Lev.	Parts No.	Description	Q'ty (A)	(B)	(C)	(D)	(E)	(F)	I	R
1	1	172527-13130	BRACKET, ENGINE	1	1	1	1				
2	1	172527-13140	BRACKET, ENGINE	1	1	1	1				
3	1	172527-13150	BRACKET, ENGINE	1	1	1	1				
4	1	172527-13160	BRACKET, ENGINE	1	1	1	1				
5	1	172524-13180	ABSORBER, SHOCK	4	4	4	4				
6	1	172527-13180	BRACKET,ENGINE	4	4	4	4				
7	1	172527-13190	STOPPER	4	4	4	4				
8	1	22137-100000	WASHER, 10	8	8	8	8				
9	1	22217-100000	WASHER, SPRING 10	24	24	24	24				
10	1	26013-100202	BOLT, M10X 20	8	8	8	8				
11	1	26013-100352	BOLT, M10X 35	8	8	8	8				
12	1	26716-100002	NUT, M10	8	8	8	8				
13	1	22137-100000	WASHER, 10	16	16	16	16				
14	1	26076-100302	BOLT, 10.910X 30	16	16	16	16				

N:Old $\frac{\text{Yes}}{\text{No}}$ New, Q:Old $\frac{\text{No}}{\text{Yes}}$ New, R:Old $\frac{\text{Yes}}{\text{Yes}}$ New, S:Old $\frac{\text{No}}{\text{No}}$ New, W:Add, Z:Discontinued, F:Interchangeable by set, K:Q'ty Change

Copyright (C) YANMAR CO., LTD. All RightsReserved.

Fig.8. RADIATOR

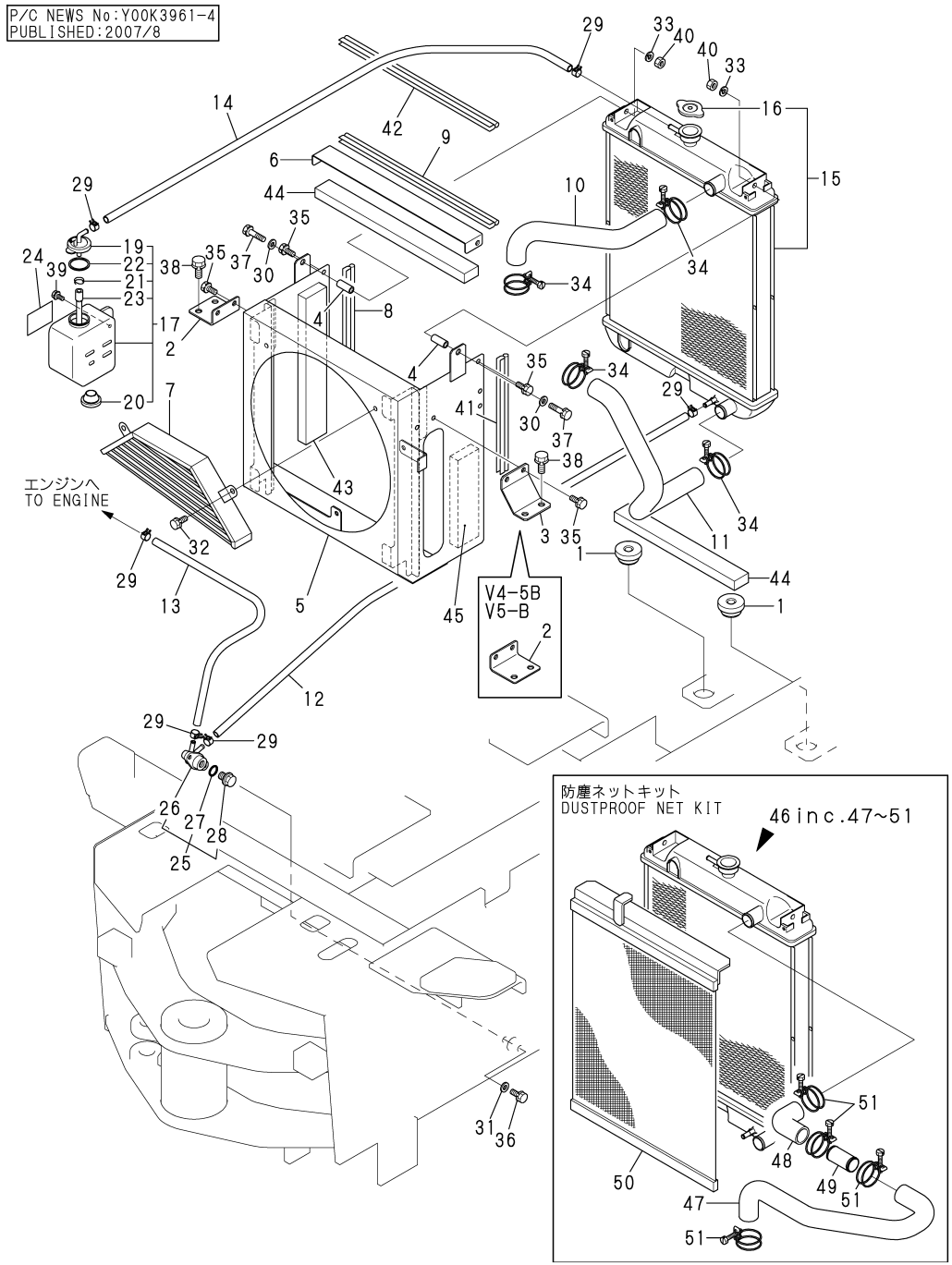

(A)=V3-5A (D)=V5-B
(B)=V3-5B (E)=
(C)=V4-5B (F)=

No.	Lev.	Parts No.	Description	Q'ty (A)	(B)	(C)	(D)	(E)	(F)	I	R
1	1	198162-00640	SUPPORT, RADIATOR	2	2	2	2				
2	1	172527-13310	STAY, RADIATOR	1	1	2	2				
3	1	172527-13340	STAY, RADIATOR	1	1						
4	1	172527-13320	COLLAR	2	2	2	2				
5	1	172530-13500	SHROUD ASSY	1	1						
5-1	1	172530-13500-1	SHROUD ASSY		1					S	
		(B=M/#53661)									
5A	1	172527-13700	SHROUD ASSY			1	1				
6	1	172527-13361	COVER, SHROUD	1	1	1	1				
7	1	172527-13370	GUARD, FAN	1	1	1	1				
8	1	172162-61380	SEAL, COVER	1	1	1	1				
9	1	172164-65730	RUBBER, SEAL	1							
9-1	1	172164-66640	RUBBER, SEAL	1	1	1	1			N	
	(A=M/#53095)										
10	1	172527-13410	PIPE, WATER	1	1	1	1				
11	1	172527-13420	PIPE, WATER	1	1	1	1				
12	1	1E6299-03000	PIPE, FUEL RETURN	1	1						
12A	1	172120-14660	HOSE			1	1				
13	1	172137-14620	PIPE, FUEL	1							
13-1	1	172141-14610	HOSE, FUEL	1	1	1	1			N	
	(A=M/#53095)										
14	1	172124-14650	HOSE L=1100, FUEL	1	1	1	1				
15	1	172528-13910	RADIATOR	1	1	1	1				
16	2	129107-44590	CAP, RADIATOR	1	1	1	1				
17	1	121468-44510	TANK ASSY	1	1	1	1				
19	2	121450-44531	CAP	1	1	1	1				
20	2	121468-44540	PLUG	1	1	1	1				
21	2	124450-44560	RETAINER	1	1	1	1				
22	2	121470-44581	GASKET	1	1	1	1				
23	2	23065-070130	PIPE, 7X 130	1	1	1	1				
24	1	121470-44540	LABEL, SUB-TANK	1	1	1	1				
25	1	121450-49110	COCK ASSY, 3-WAY	1	1						
25A	1	172444-13210	COCK ASSY, 2-WAY			1	1				
26	2	121450-49100	BODY, 3-WAY COCK	1	1						
26A	2	172444-13220	BODY			1	1				
27	2	24311-000160	O-RING, 1AP16.0	1	1	1	1				
28	2	23491-140002	PLUG, 14	1	1						
28A	2	121250-49121	PLUG, DRAIN			1	1				
29	1	124766-59050	CLIP, HOSE 12	6	6	4	4				
30	1	22137-080000	WASHER, 8	2	2	2	2				
31	1	22137-080000	WASHER, 8	2	2	2	2				
32	1	26013-080162	BOLT, M8X 16	2	2	2	2				
33	1	22217-080000	WASHER, SPRING 8	2	2	2	2				
34	1	23001-041000	CLAMP, HOSE 41	4	4	4	4				
35	1	26013-080162	BOLT, M8X 16	6	6	6	6				
36	1	26013-080352	BOLT, M8X 35	2	2	2	2				
37	1	26013-080552	BOLT, M8X 55	2	2	2	2				
38	1	26013-100202	BOLT, M10X 20	4	4	4	4				
39	1	26014-060162	BOLT, M6X 16	2	2	2	2				
40	1	26716-080002	NUT, M8	2	2	2	2				
41	1	172455-65970	RUBBER, SEAL	1	1	1	1				

N:Old $\xleftarrow[\text{No}]{\text{Yes}}$ New, Q:Old $\xleftarrow[\text{Yes}]{\text{No}}$ New, R:Old $\xleftarrow[\text{Yes}]{\text{Yes}}$ New, S:Old $\xleftarrow[\text{No}]{\text{No}}$ New, W:Add, Z:Discontinued, F:Interchangeable by set, K:Q'ty Change

++ CONTINUE ++

Copyright (C) YANMAR CO., LTD. All RightsReserved.

Fig.8. RADIATOR

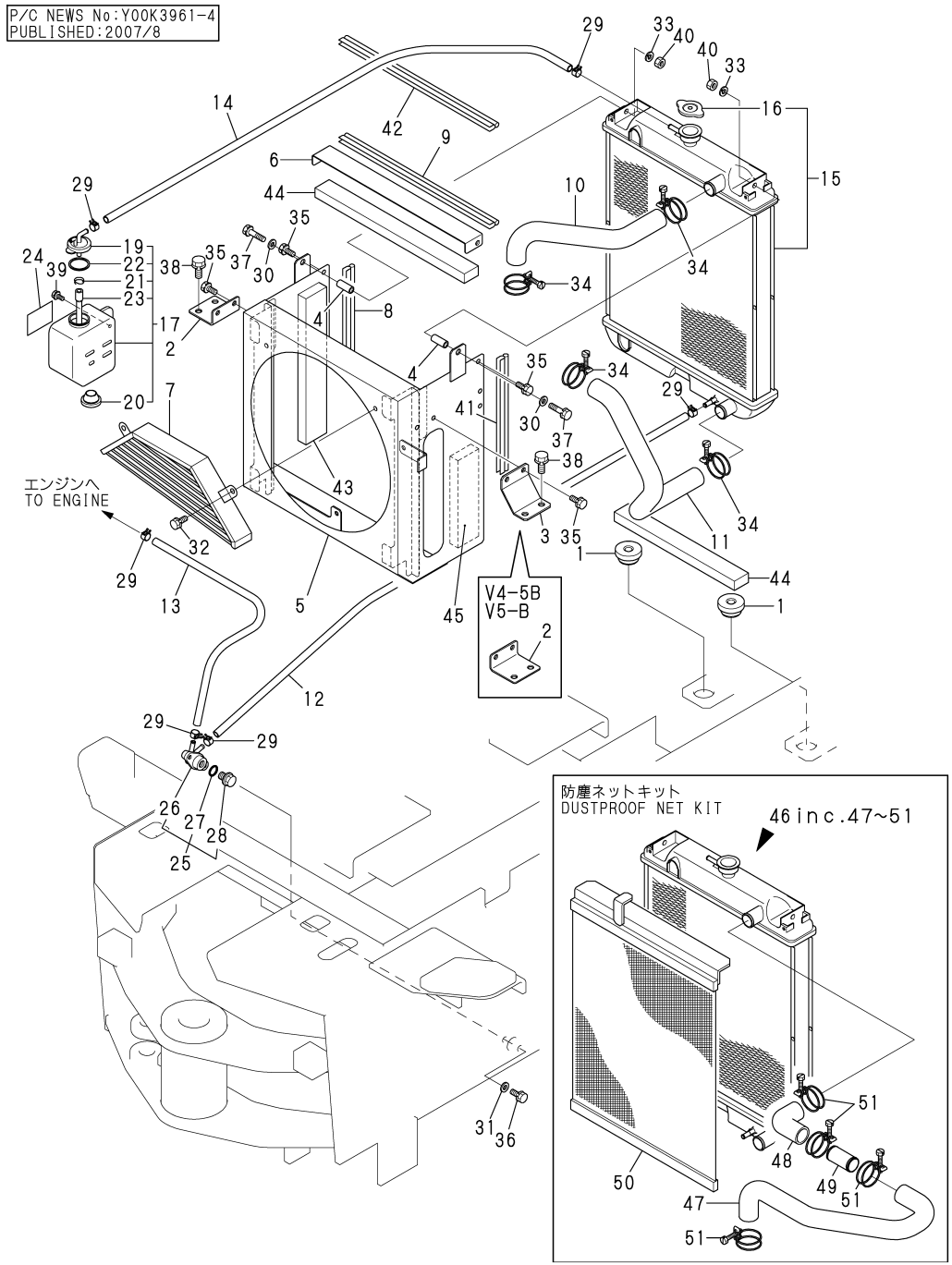

(A)=V3-5A (D)=V5-B
(B)=V3-5B (E)=
(C)=V4-5B (F)=

No.	Lev.	Parts No.	Description	Q'ty (A)	(B)	(C)	(D)	(E)	(F)	I	R
42	1	184015-03250	SEAL, DOOR	1	1	1	1				
43	1	172527-63450	SOUND-PROOF SRD-R	1	1	1	1				
44	1	172527-63460	SOUND-PROOF SRD-M	2	2	2	2				
45	1	172527-63470	SOUND-PROOF SRD-L	1	1	1	1				
46	1	172527-08500	NET KIT, DUST	1	1	1	1				
47	2	172527-13810	PIPE, WATER	1	1	1	1				
48	2	172527-13820	PIPE, WATER	1	1	1	1				
49	2	172527-13830	JOINT, HOSE	1	1	1	1				
50	2	129126-44570	PROTECTOR	1	1	1	1				
51	2	23001-041000	CLAMP, HOSE 41	4	4	4	4				

N:Old $\overset{\text{Yes}}{\underset{\text{No}}{\leftrightarrow}}$ New, Q:Old $\overset{\text{No}}{\underset{\text{Yes}}{\leftrightarrow}}$ New, R:Old $\overset{\text{Yes}}{\underset{\text{Yes}}{\leftrightarrow}}$ New, S:Old $\overset{\text{No}}{\underset{\text{No}}{\leftrightarrow}}$ New, W:Add, Z:Discontinued, F:Interchangeable by set, K:Q'ty Change

Copyright (C) YANMAR CO., LTD. All RightsReserved.

Fig.9. FUEL TANK

P/C NEWS No:Y00K3961-2
PUBLISHED:2007/3

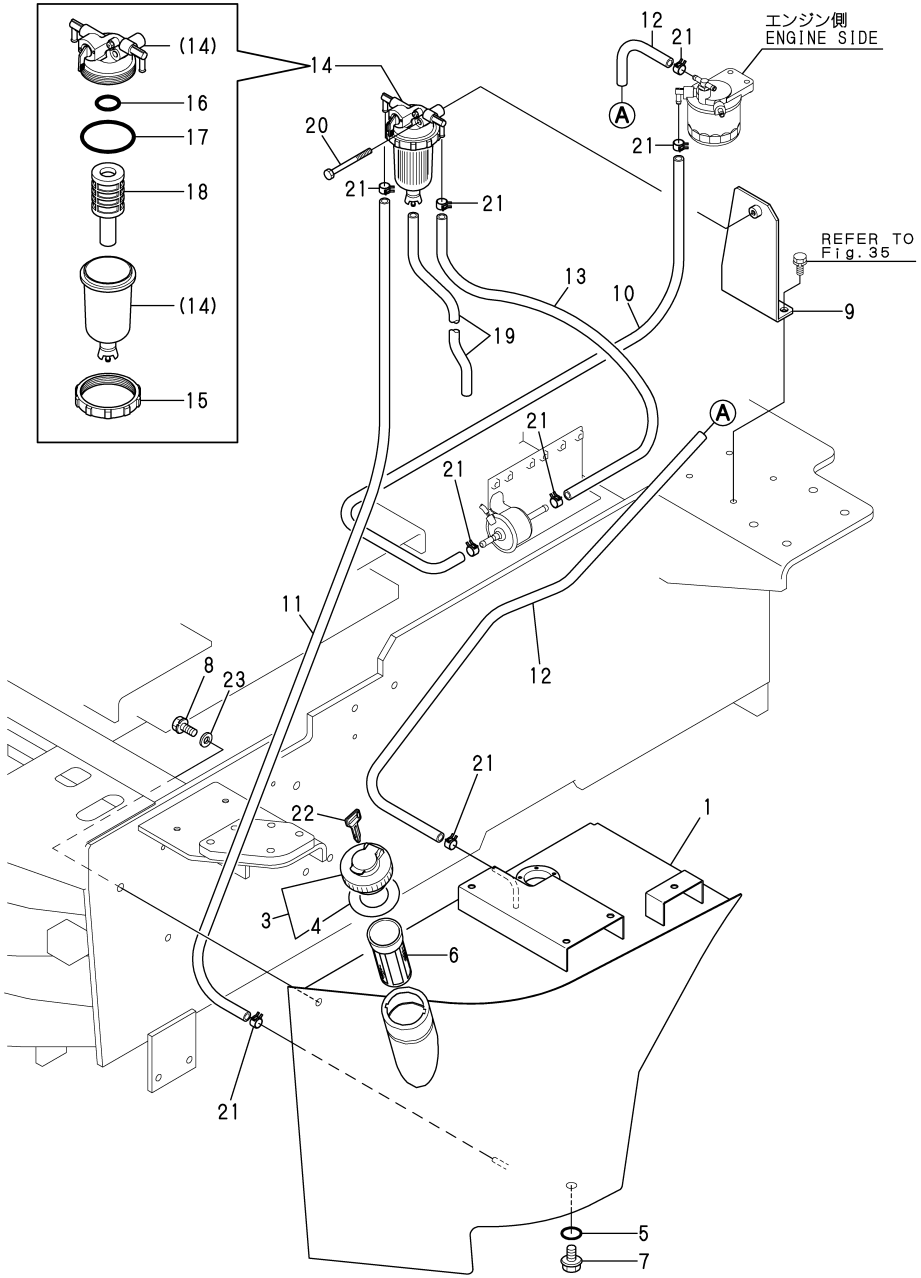

(A)=V3-5A (D)=V5-B
(B)=V3-5B (E)=
(C)=V4-5B (F)=

No.	Lev.	Parts No.	Description	Q'ty (A)	(B)	(C)	(D)	(E)	(F)	I	R
1	1	172527-14101	TANK ASSY, FUEL	1	1	1	1				
1-1	1	172527-14101-2	TANK ASSY, FUEL		1					S	
		(B=M/#53661)									
3	1	172122-14301	CAP ASSY, TANK	1	1	1	1				
4	2	172122-14350	GASKET	1	1	1	1				
5	1	24311-000160	O-RING, 1AP16.0	1	1	1	1				
6	1	101504-55101	STRAINER, FUEL	1	1	1	1				
7	1	23491-140002	PLUG, 14	1	1	1	1				
8	1	26013-120302	BOLT, M12X 30	3	3	3	3				
9	1	172528-14610	BRACKET	1	1	1	1				
10	1	172137-14620	PIPE, FUEL	1	1	1	1				
11	1	172122-14620	PIPE, FUEL	1	1	1	1				
12	1	172141-14610	HOSE, FUEL	1	1	1	1				
13	1	172141-14620	HOSE, FUEL	1							
13-1	1	172183-14640	HOSE, FUEL	1	1	1	1			N	
	(A=M/#53095)										
14	1	184016-55700	SEPARATOR ASSY,WATER	1	1	1	1				
14-1	1	184016-55701	SEPARATOR ASSY	1	1	1	1			N	
	(A=M60698)	(B=M60698)	(C=M60985) (D=MXXXXX)								
15	2	129100-55690	RING, RETAINING	1	1	1	1				
16	2	24311-000160	O-RING, 1AP16.0	1	1	1	1				
17	2	24321-000650	O-RING, 1AG65.0	1	1	1	1				
18	2	119802-55710	ELEMENT	1	1	1	1				
19	1	23061-050300	PIPE, 5X 300	1	1	1	1				
20	1	26106-080652	BOLT, M8X 65 PLATED	1	1	1	1				
21	1	124766-59050	CLIP, HOSE 12	8	8	8	8				
22	1	933110-07101	KEY	1	1	1	1				
23	1	22137-120000	WASHER, 12	3	3	3	3				

N:Old $\xleftarrow[\text{No}]{\text{Yes}}$ New, Q:Old $\xleftarrow[\text{Yes}]{\text{No}}$ New, R:Old $\xleftarrow[\text{Yes}]{\text{Yes}}$ New, S:Old $\xleftarrow[\text{No}]{\text{No}}$ New, W:Add, Z:Discontinued, F:Interchangeable by set, K:Q'ty Change

Copyright (C) YANMAR CO., LTD. All RightsReserved.

Fig.10. BATTERY

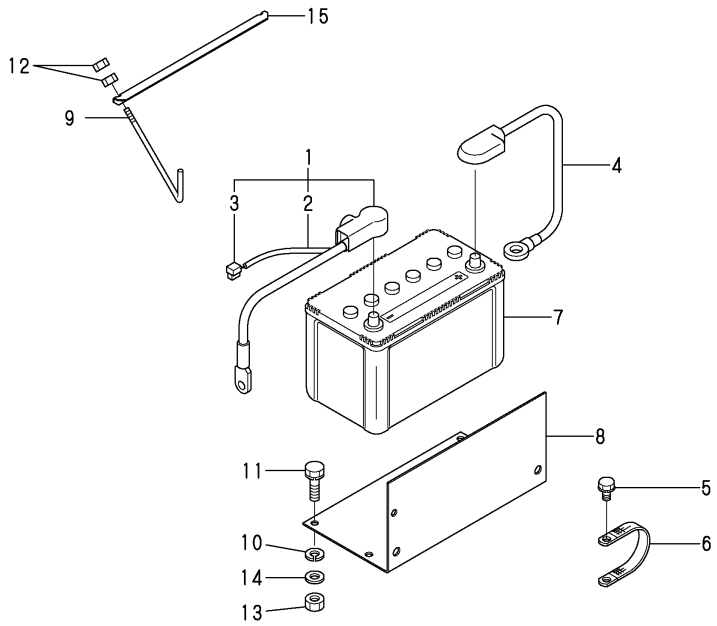

(A)=V3-5A (D)=V5-B
(B)=V3-5B (E)=
(C)=V4-5B (F)=

No.	Lev.	Parts No.	Description	Q'ty (A)	(B)	(C)	(D)	(E)	(F)	I	R
1	1	172527-16100	CABLE ASSY, BATTERY	1	1	1	1				
2	2	172527-16130	CORD, BATTERY	1	1	1	1				
3	2	172527-16150	HARNESS C,WIRE	1	1	1	1				
4	1	172527-16120	CABLE, BATTERY EARTH	1	1	1	1				
5	1	26013-100162	BOLT, M10X 16	2	2	2	2				
6	1	933171-15801	CORD, ENGINE EARTH	1	1	1	1				
7	1	198010-51500	BATTERY	1	1	1	1				
8	1	172527-16310	HOLDER, BATTERY	1	1	1	1				
9	1	172521-16320	ROD, CLAMP	2	2	2	2				
10	1	22217-100000	WASHER, SPRING 10	4	4	4	4				
11	1	26013-100352	BOLT, M10X 35	4	4	4	4				
12	1	26716-080002	NUT, M8	4	4	4	4				
13	1	26716-100002	NUT, M10	4	4	4	4				
14	1	194145-04810	WASHER	4	4	4	4				
15	1	172116-16310-1	RETAINER, BATTERY	1	1	1	1				

N:Old $\frac{\text{Yes}}{\text{No}}$ New, Q:Old $\frac{\text{No}}{\text{Yes}}$ New, R:Old $\frac{\text{Yes}}{\text{Yes}}$ New, S:Old $\frac{\text{No}}{\text{No}}$ New, W:Add, Z:Discontinued, F:Interchangeable by set, K:Q'ty Change

Copyright (C) YANMAR CO., LTD. All RightsReserved.

Fig.11. WIRING

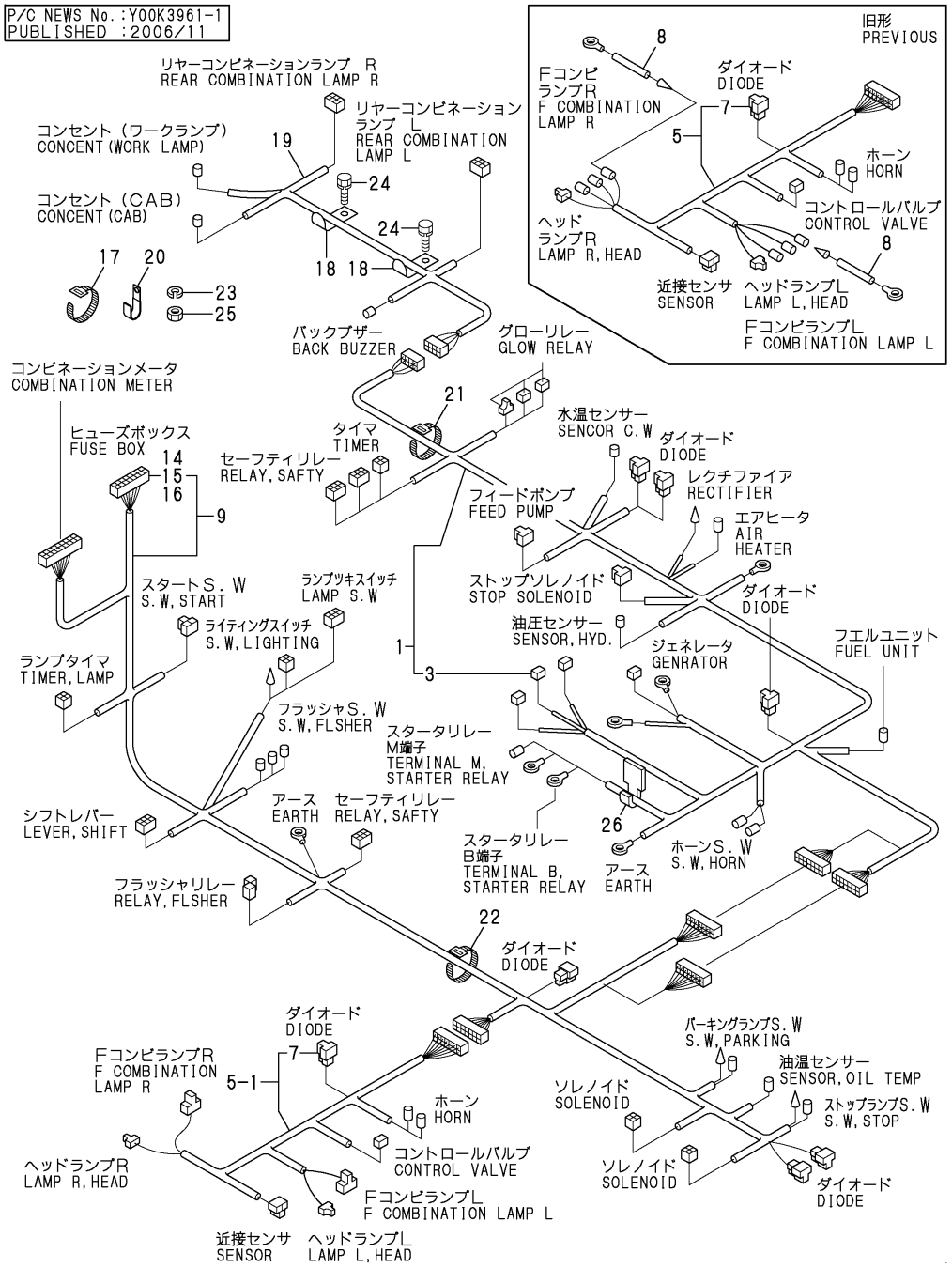

(A)=V3-5A (D)=V5-B
(B)=V3-5B (E)=
(C)=V4-5B (F)=

No.	Lev.	Parts No.	Description	Q'ty (A)	(B)	(C)	(D)	(E)	(F)	I	R
1	1	172527-16200	HARNESS ASSY,REAR	1	1	1	1				
3	2	172458-16550	FUSE, SLOWBLOW	1	1	1	1				
5	1	172527-16300	HARNESS ASSY,F	1	1	1	1				
5-1	1	172534-16300	HARNESS ASSY,FRONT	1	1	1	1			S	
	(A=M/#53194)	(B=M/#53640)	(C=M/#52585) (D=M/#02526)								
7	2	172648-16600	DIODE	1	1	1	1				
8	1	172527-16320	HARNESS,FC	2	2	2	2			Z	
	(A=M/#53194)	(B=M/#53640)	(C=M/#52585) (D=M/#02526)								
9	1	172527-16500	HARNESS ASSY,M	1							
9-1	1	172534-16500	HARNESS ASSY,M	1						S	
	(A=M/#53194)										
9A	1	172534-16500	HARNESS ASSY,M		1	1	1				
14	2	29420-050000	FUSE, B 5A	2	2	2	2				
15	2	29420-150000	FUSE, B 15A	6	6	6	6				
16	2	29420-300000	FUSE, B 30A	2	2	2	2				
17	1	172137-16560	BAND	5	5	5	5				
18	1	172512-16560	CLAMP, HARNESS	5	5	5	5				
19	1	172527-16570	HARNESS,WIRE R3	1	1	1	1				
19-1	1	172534-16570	WIRE HARNESS,R3	1	1	1	1			S	
	(A=M/#53194)	(B=M/#53640)	(C=M/#52585) (D=M/#02526)								
20	1	1A1380-59480	CLAMP, CORD	1	1	1	1				
21	1	172122-79930	CLAMP, HOSE	10	10	10	10				
22	1	172122-79940	CLIP, HOSE	10	10	10	10				
23	1	22217-060000	WASHER, SPRING 6	1	1	1	1				
24	1	26013-080162	BOLT, M8X 16	5	5	5	5				
25	1	26716-060002	NUT, M6	1	1	1	1				
26	1	933169-15231	STEP	1	1	1	1				

N:Old $\xleftarrow[\text{No}]{\text{Yes}}$ New, Q:Old $\xleftarrow[\text{Yes}]{\text{No}}$ New, R:Old $\xleftarrow[\text{Yes}]{\text{Yes}}$ New, S:Old $\xleftarrow[\text{No}]{\text{No}}$ New, W:Add, Z:Discontinued, F:Interchangeable by set, K:Q'ty Change

Copyright (C) YANMAR CO., LTD. All RightsReserved.

Fig.12. ELECTRIC PART

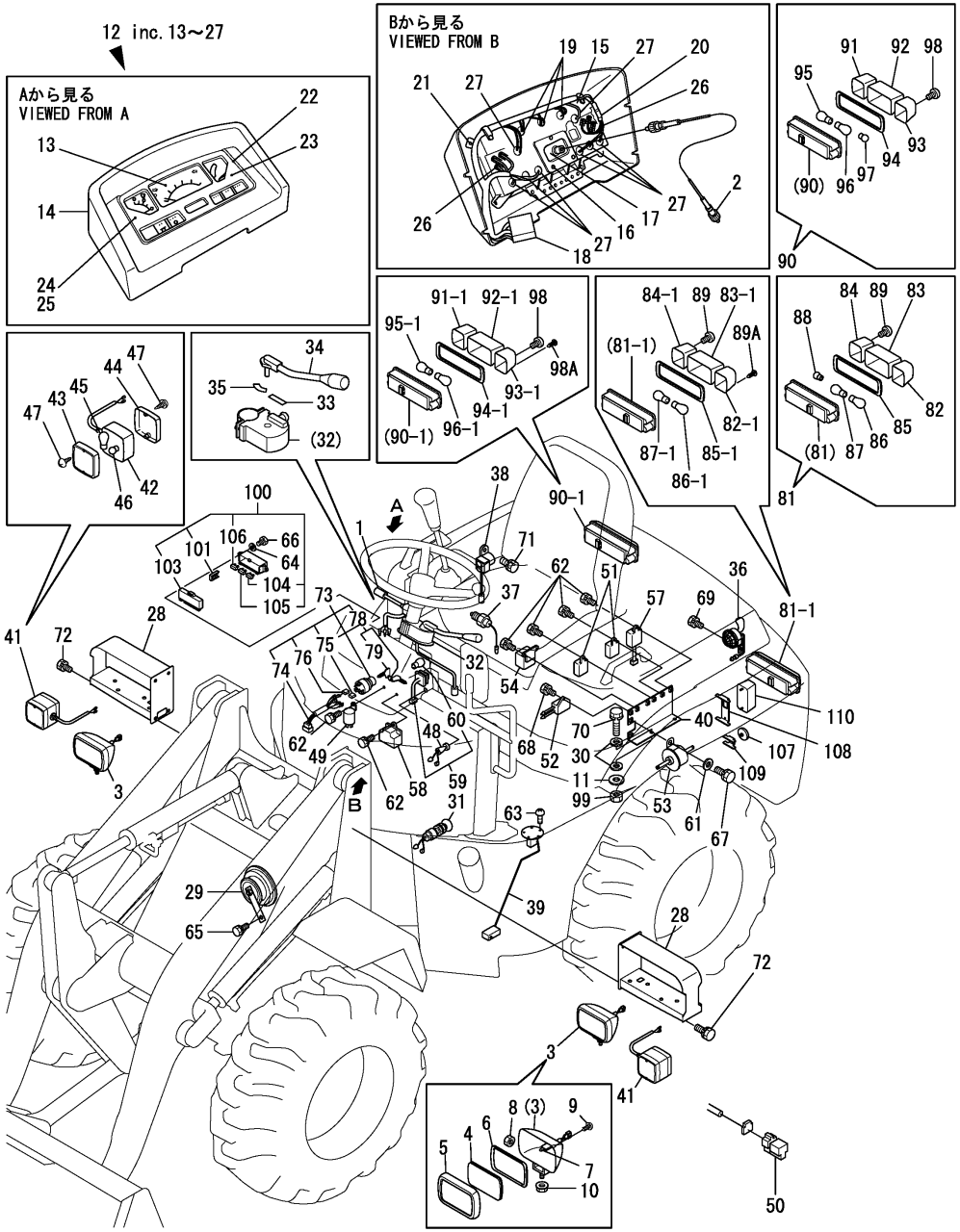

(A)=V3-5A (D)=V5-B
(B)=V3-5B (E)=
(C)=V4-5B (F)=

No.	Lev.	Parts No.	Description	Q'ty (A)	(B)	(C)	(D)	(E)	(F)	I	R
1	1	172515-08790	SWITCH, FLASHER	1	1	1	1				
2	1	172527-17080	CABLE ASSY, METER	1	1	1	1				
3	1	172527-17110	LAMP,HEAD	2	2	2	2				
4	2	172527-17250	LENS	2	2	2	2				
5	2	172527-17260	LIM	2	2	2	2				
6	2	172527-17280	GASKET	2	2	2	2				
7	2	172527-17290	BULB, 12V 55W	2	2	2	2				
8	2	172527-17310	NUT	2	2	2	2				
9	2	172527-17340	SCREW	8	8	8	8				
10	2	172527-17350	NUT	2	2	2	2				
11	1	194145-04810	WASHER	2	2	2	2				
12	1	172527-17200	METER,COMBINATION	1	1	1	1				
13	2	172524-17210	METERS CMP,HR.&TACHO	1	1	1	1				
14	2	172524-17220	VISOR	1	1	1	1				
15	2	172527-17360	CASE COMPL.	1	1	1	1				
16	3	198220-53170	SCREW	3	3	3	3				
17	2	172524-17240	SCREW,BODY LOCK	2	2	2	2				
18	2	172524-17250	HARNESS, WIRE	1	1	1	1				
19	2	172524-17260	LAMP 12V-11.7W	3	3	3	3				
20	2	172524-17270	CLAMP, CORD	1	1	1	1				
21	2	198220-53170	SCREW	11	11	11	11				
22	2	198220-56130	PACKING	1	1	1	1				
23	2	198220-56140	GLASS	1	1	1	1				
24	2	198220-56150	REFLECTOR	1	1	1	1				
25	2	198220-56160	PACKING	1	1	1	1				
26	2	198220-56230	SCREW, M3X22	6	6	6	6				
27	2	124617-91920	BULB, 12V-3W	8	8	8	8				
28	1	172530-17150	SUPPORT, LAMP	2	2	2	2				
29	1	1A6780-57110	HORN ASSY	1	1	1	1				
30	1	22137-100000	WASHER, 10	4	4	4	4				
31	1	172524-17280	SWITCH, STOP LAMP	2	2	2	2				
32	1	172524-17310	LEVER, SHIFT	1	1	1	1				
32-1	1	172524-17311	LEVER, SHIFT	1	1	1	1				N
	(A=MZZZZZ)	(B=MZZZZZ)	(C=MZZZZZ) (D=MZZZZZ)								
33	2	172524-17320	LABEL	1	1	1	1				
34	2	172524-17380	LEVER ASSY	1	1	1	1				
34-1	2	172524-17381	LEVER ASSY	1	1	1	1				S
	(A=MZZZZZ)	(B=MZZZZZ)	(C=MZZZZZ) (D=MZZZZZ)								
35	2	172520-17390	LABEL	1	1	1	1				
36	1	172511-17351	BUZZER, BACK	1	1	1	1				
37	1	172520-17351	SWITCH, THERMO	1	1	1	1				
38	1	172524-17360	RELY,STARTER	1	1	1	1				
39	1	172527-17411	GAUGE, FUEL	1	1	1	1				
40	1	172527-17451	STAY, RELAY	1	1	1	1				
41	1	172524-17660	LAMP,FRONT COMBI.	2	2	2	2				
41-1	1	1E9110-81100	LAMP, COMBINATION	2	2	2	2				S
	(A=M/#53194)	(B=M/#53640)	(C=M/#52585) (D=M/#02526)								
42	2	172524-17670	BODY	2	2	2	2				Z
	(A=M/#53194)	(B=M/#53640)	(C=M/#52585) (D=M/#02526)								
43	2	172524-17680	LENS	2	2	2	2				Z
	(A=M/#53194)	(B=M/#53640)	(C=M/#52585) (D=M/#02526)								

N:Old $\xleftrightarrow[\text{No}]{\text{Yes}}$ New, Q:Old $\xleftrightarrow[\text{Yes}]{\text{No}}$ New, R:Old $\xleftrightarrow[\text{Yes}]{\text{Yes}}$ New, S:Old $\xleftrightarrow[\text{No}]{\text{No}}$ New, W:Add, Z:Discontinued, F:Interchangeable by set, K:Q'ty Change

++ CONTINUE ++

Copyright (C) YANMAR CO., LTD. All RightsReserved.

Fig.12. ELECTRIC PART

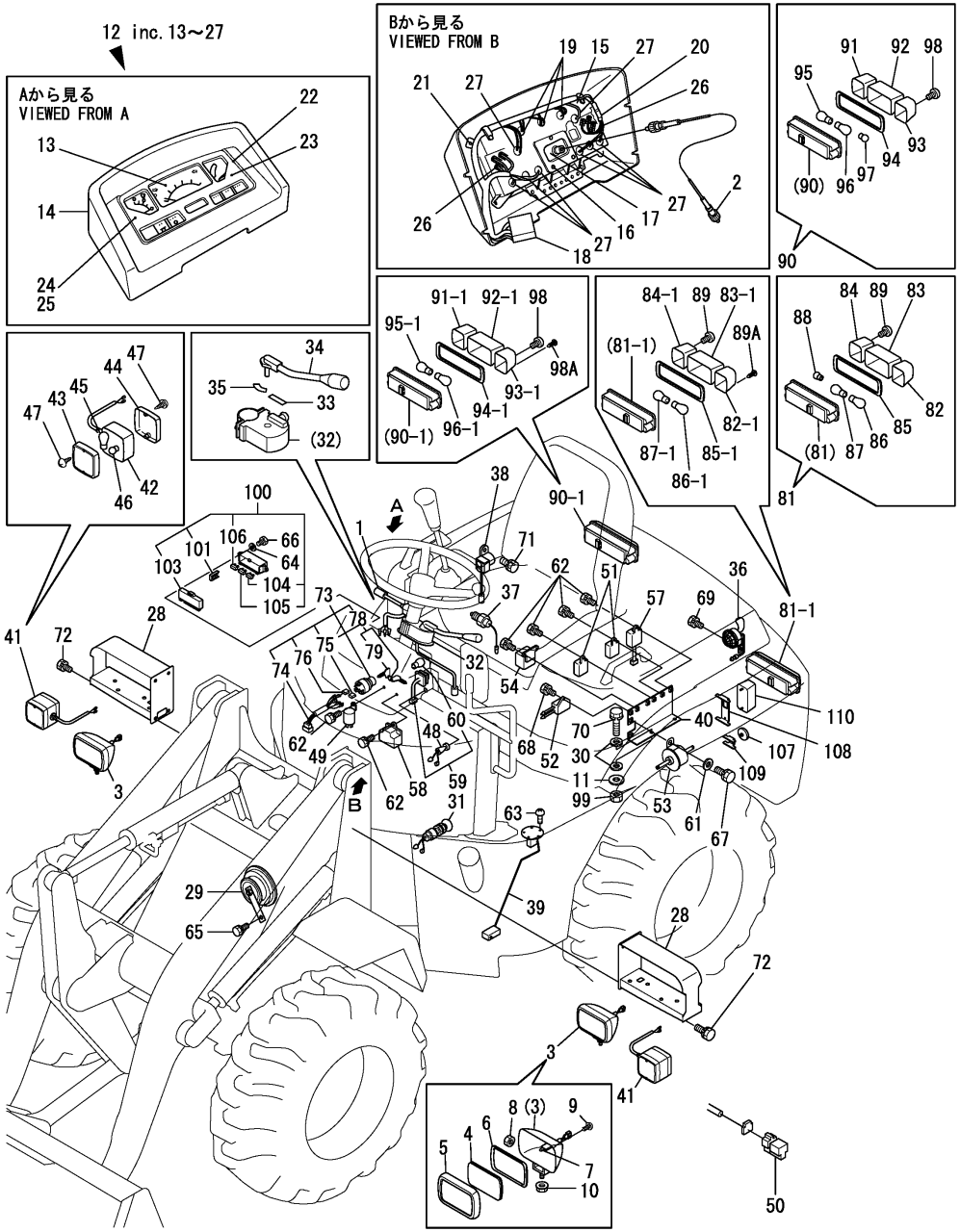

(A)=V3-5A (D)=V5-B
(B)=V3-5B (E)=
(C)=V4-5B (F)=

No.	Lev.	Parts No.	Description	Q'ty (A)	(B)	(C)	(D)	(E)	(F)	I	R
44	2	172524-17690	LENS	2	2	2	2			Z	
	(A=M/#53194)	(B=M/#53640)	(C=M/#52585) (D=M/#02526)								
45	2	172524-17810	BULB, 12V 21W	2	2	2	2			Z	
	(A=M/#53194)	(B=M/#53640)	(C=M/#52585) (D=M/#02526)								
46	2	172524-17820	BULB, 12V 5W	2	2	2	2			Z	
	(A=M/#53194)	(B=M/#53640)	(C=M/#52585) (D=M/#02526)								
47	2	172524-17830	SCREW	4	4	4	4			Z	
	(A=M/#53194)	(B=M/#53640)	(C=M/#52585) (D=M/#02526)								
48	1	194420-52120	SWITCH, LIGHTING	1	1	1	1				
49	1	194080-57202	RELAY, FLASHER	1	1	1	1				
50	1	119643-66900	DIODE	1						Z	
	(A=M/#53110)										
51	1	119247-77100	RELAY, SAFETY	2	2	2	2				
52	1	160970-77350	RECTIFIER, ZR2117	1	1	1	1				
53	1	129612-52100	PUMP ASSY, FUEL FEED	1	1	1	1				
54	1	119650-77910	RELAY ASSY, GLOW	1	1	1	1				
57	1	129211-77920	TIMER	1	1	1	1				
58	1	124970-77920	TIMER	1	1	1	1				
59	1	1E6690-81530	SWITCH	1	1	1	1				
60	2	1E6480-82280	BULB,12V-34W	1	1	1	1				
61	1	22137-060000	WASHER, 6	2	2	2	2				
62	1	26013-060162	BOLT, M6X 16	7	7	7	7				
63	1	26022-050162	SCREW, M5X16	5	5	5	5				
64	1	22137-060000	WASHER, 6	2	2	2	2				
65	1	26013-080162	BOLT, M8X 16	1	1	1	1				
66	1	26013-060162	BOLT, M6X 16	2	2	2	2				
67	1	26013-060162	BOLT, M6X 16	2	2	2	2				
68	1	26013-060252	BOLT, M6X 25	1	1	1	1				
69	1	26013-080122	BOLT, M8X 12	1	1	1	1				
70	1	26013-100352	BOLT, M10X 35	2	2	2	2				
71	1	26013-080202	BOLT, M8X 20	1	1	1	1				
72	1	26013-100252	BOLT, M10X 25	8	8	8	8				
73	1	172187-17100	SWITCH ASSY, STARTER	1	1	1	1				
74	2	172187-17070	CORD ASSY	1	1	1	1				
75	2	172187-17080	COVER	3	3	3	3				
76	2	172187-17090	COVER	2	2	2	2				
78	2	933110-00301	KEY ASSY	1	1	1	1				
79	3	933110-07101	KEY	2	2	2	2				
81	1	172527-17210	LAMP,REAR COMBI.L	1	1	1	1				
81-1	1	1A7400-53110	LAMP ASSY, L	1	1	1	1			S	
	(A=M/#53194)	(B=M/#53640)	(C=M/#52585) (D=M/#02526)								
82	2	172527-17420	LENS L	1	1	1	1				
82-1	2	1A7400-53590	LENS, L	1	1	1	1			S	
	(A=M/#53194)	(B=M/#53640)	(C=M/#52585) (D=M/#02526)								
83	2	172527-17440	LENS L	1	1	1	1				
83-1	2	1A7400-53570	LENS, L	1	1	1	1			S	
	(A=M/#53194)	(B=M/#53640)	(C=M/#52585) (D=M/#02526)								
84	2	172527-17470	LENS L	1	1	1	1				
84-1	2	1A7400-53610	LENS, L	1	1	1	1			S	
	(A=M/#53194)	(B=M/#53640)	(C=M/#52585) (D=M/#02526)								
85	2	172527-17560	GASKET	1	1	1	1				

N:Old $\xleftarrow[\text{No}]{\text{Yes}}$ New, Q:Old $\xleftarrow[\text{Yes}]{\text{No}}$ New, R:Old $\xleftarrow[\text{Yes}]{\text{Yes}}$ New, S:Old $\xleftarrow[\text{No}]{\text{No}}$ New, W:Add, Z:Discontinued, F:Interchangeable by set, K:Q'ty Change

++ CONTINUE ++

Copyright (C) YANMAR CO., LTD. All RightsReserved.

Fig.12. ELECTRIC PART

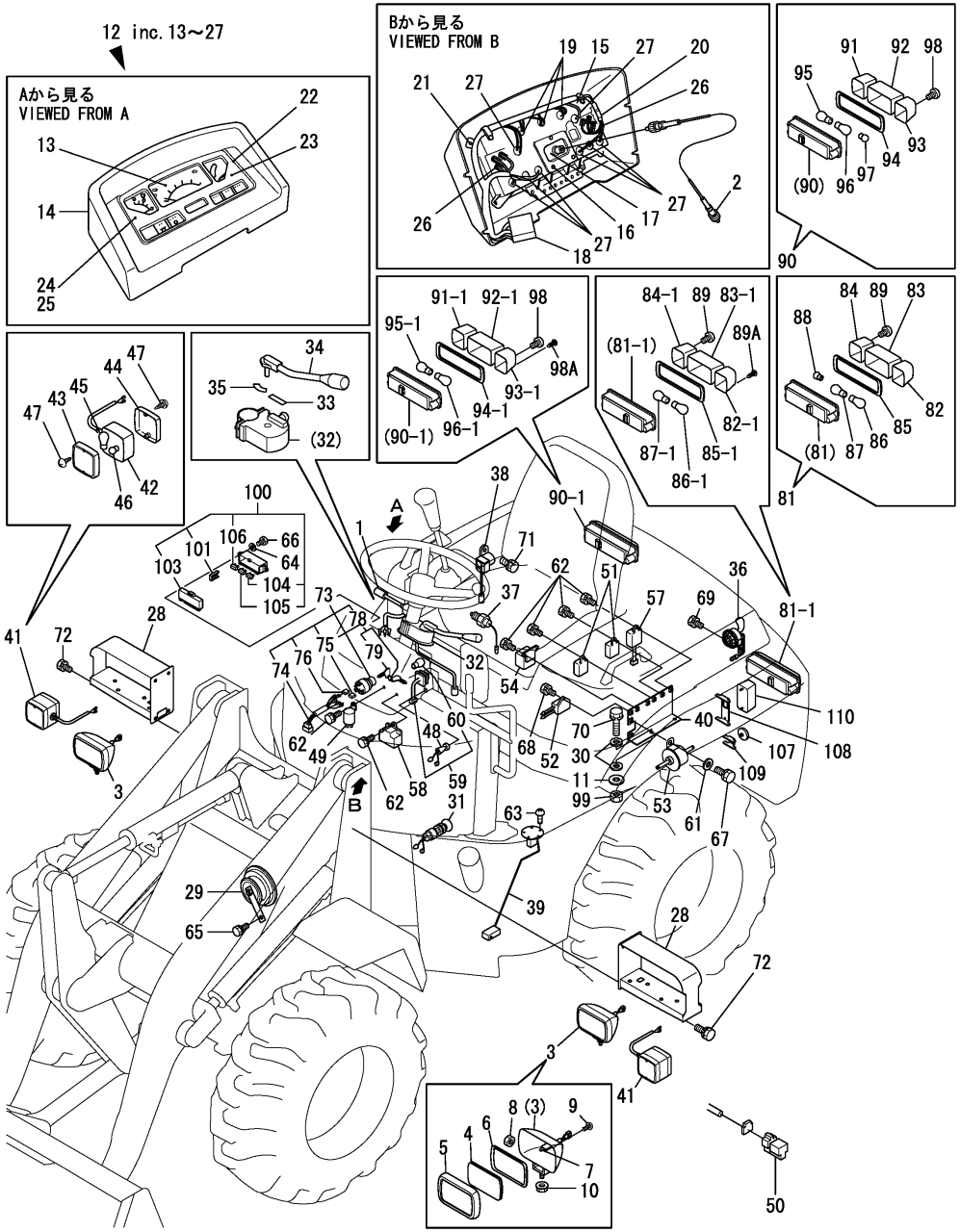

(A)=V3-5A (B)=V3-5B (C)=V4-5B (D)=V5-B (E)= (F)=

No.	Lev.	Parts No.	Description	Q'ty (A)	(B)	(C)	(D)	(E)	(F)	I	R
85-1	2	1A7400-53560	GASKET	1	1	1	1			S	
	(A=M/#53194)	(B=M/#53640)	(C=M/#52585) (D=M/#02526)								
86	2	172527-17520	BULB, 12V 23W	1	1	1	1				
86-1	2	1A7400-53520	VALVE, 12V21W	1	1	1	1			S	
	(A=M/#53194)	(B=M/#53640)	(C=M/#52585) (D=M/#02526)								
87	2	172527-17540	BULB, 12V 23/8W	1	1	1	1				
87-1	2	1A7400-53530	VALVE, 12V21/5W	1	1	1	1			S	
	(A=M/#53194)	(B=M/#53640)	(C=M/#52585) (D=M/#02526)								
88	2	172527-17550	BULB, 12V 10W	1	1	1	1			Z	
	(A=M/#53194)	(B=M/#53640)	(C=M/#52585) (D=M/#02526)								
89	2	172527-17570	SCREW	2	2	2	2				
89A	2	1A7400-53550	SCREW, TAPPING	2	2	2	2			W	
	(A=M/#53194)	(B=M/#53640)	(C=M/#52585) (D=M/#02526)								
90	1	172527-17220	LAMP,REAR COMBI.R	1	1	1	1				
90-1	1	1A7400-53120	LAMP ASSY, R	1	1	1	1			S	
	(A=M/#53194)	(B=M/#53640)	(C=M/#52585) (D=M/#02526)								
91	2	172527-17430	LENS R	1	1	1	1				
91-1	2	1A7400-53600	LENS, R	1	1	1	1			S	
	(A=M/#53194)	(B=M/#53640)	(C=M/#52585) (D=M/#02526)								
92	2	172527-17460	LENS R	1	1	1	1				
92-1	2	1A7400-53580	LENS, R	1	1	1	1			S	
	(A=M/#53194)	(B=M/#53640)	(C=M/#52585) (D=M/#02526)								
93	2	172527-17480	LENS R	1	1	1	1				
93-1	2	1A7400-53620	LENS, R	1	1	1	1			S	
	(A=M/#53194)	(B=M/#53640)	(C=M/#52585) (D=M/#02526)								
94	2	172527-17560	GASKET	1	1	1	1				
94-1	2	1A7400-53560	GASKET	1	1	1	1			S	
	(A=M/#53194)	(B=M/#53640)	(C=M/#52585) (D=M/#02526)								
95	2	172527-17520	BULB, 12V 23W	1	1	1	1				
95-1	2	1A7400-53520	VALVE, 12V21W	1	1	1	1			S	
	(A=M/#53194)	(B=M/#53640)	(C=M/#52585) (D=M/#02526)								
96	2	172527-17540	BULB, 12V 23/8W	1	1	1	1				
96-1	2	1A7400-53530	VALVE, 12V21/5W	1	1	1	1			S	
	(A=M/#53194)	(B=M/#53640)	(C=M/#52585) (D=M/#02526)								
97	2	172527-17550	BULB, 12V 10W	1	1	1	1			Z	
	(A=M/#53194)	(B=M/#53640)	(C=M/#52585) (D=M/#02526)								
98	2	172527-17570	SCREW	2	2	2	2				
98A	2	1A7400-53550	SCREW, TAPPING	2	2	2	2			W	
	(A=M/#53194)	(B=M/#53640)	(C=M/#52585) (D=M/#02526)								
99	1	26716-100002	NUT, M10	2	2	2	2				
100	1	172187-17200	BOX, FUSE	1						Z	
	(A=M/#53110)										
101	2	172175-17120	PULLER	1						Z	
	(A=M/#53110)										
103	2	172187-17220	COVER	1						Z	
	(A=M/#53110)										
104	2	29420-050000	FUSE, B 5A	2						Z	
	(A=M/#53110)										
105	2	29420-150000	FUSE, B 15A	6						Z	
	(A=M/#53110)										
106	2	29420-300000	FUSE, B 30A	2						Z	

N:Old $\xleftrightarrow[\text{No}]{\text{Yes}}$ New, Q:Old $\xleftrightarrow[\text{Yes}]{\text{No}}$ New, R:Old $\xleftrightarrow[\text{Yes}]{\text{Yes}}$ New, S:Old $\xleftrightarrow[\text{No}]{\text{No}}$ New, W:Add, Z:Discontinued, F:Interchangeable by set, K:Q'ty Change

++ CONTINUE ++

Copyright (C) YANMAR CO., LTD. All RightsReserved.

Fig.12. ELECTRIC PART

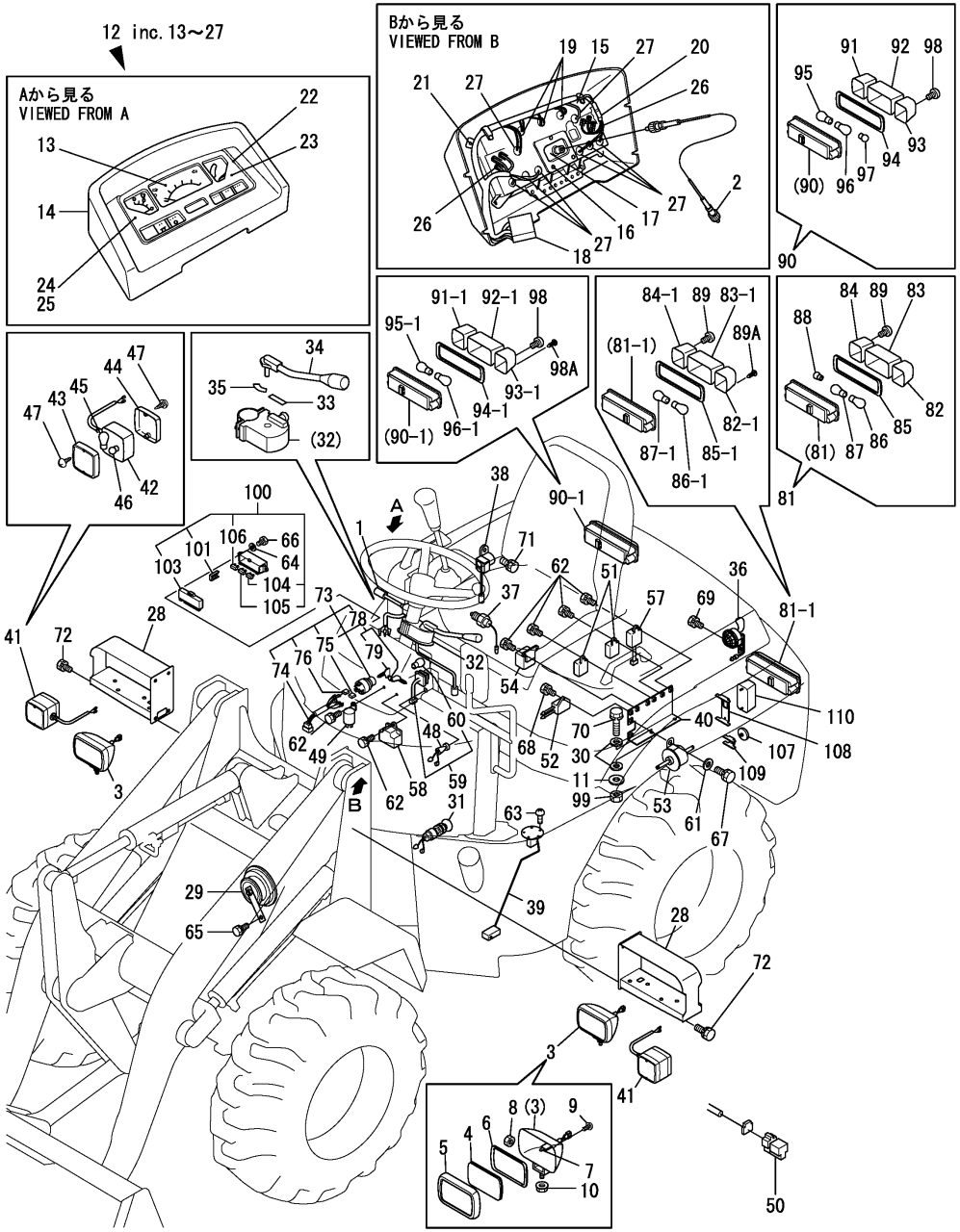

(A)=V3-5A (D)=V5-B
(B)=V3-5B (E)=
(C)=V4-5B (F)=

No.	Lev.	Parts No.	Description	Q'ty (A)	(B)	(C)	(D)	(E)	(F)	I	R
	(A=M/#53110)										
107	1	172532-17170	REFLECTOR	2	2	2	2			W	
	(A=M/#53194)	(B=M/#53640)	(C=M/#52585) (D=M/#02526)								
108	1	172534-17210	PLATE,BACK LAMP	1	1	1	1			W	
	(A=M/#53194)	(B=M/#53640)	(C=M/#52585) (D=M/#02526)								
109	1	172534-17220	PLATE,REFLECTOR	2	2	2	2			W	
	(A=M/#53194)	(B=M/#53640)	(C=M/#52585) (D=M/#02526)								
110	1	1E9000-82000	LAMP, BACK	1	1	1	1			W	
	(A=M/#53194)	(B=M/#53640)	(C=M/#52585) (D=M/#02526)								

N:Old ←Yes/No→ New, Q:Old ←No/Yes→ New, R:Old ←Yes/Yes→ New, S:Old ←No/No→ New, W:Add, Z:Discontinued, F:Interchangeable by set, K:Q'ty Change

Copyright (C) YANMAR CO., LTD. All RightsReserved.

Fig.13. ELECTRIC PART(AUTO LEBELLER)

(A)=V3-5A
(B)=V3-5B
(C)=V4-5B
(D)=V5-B
(E)=
(F)=

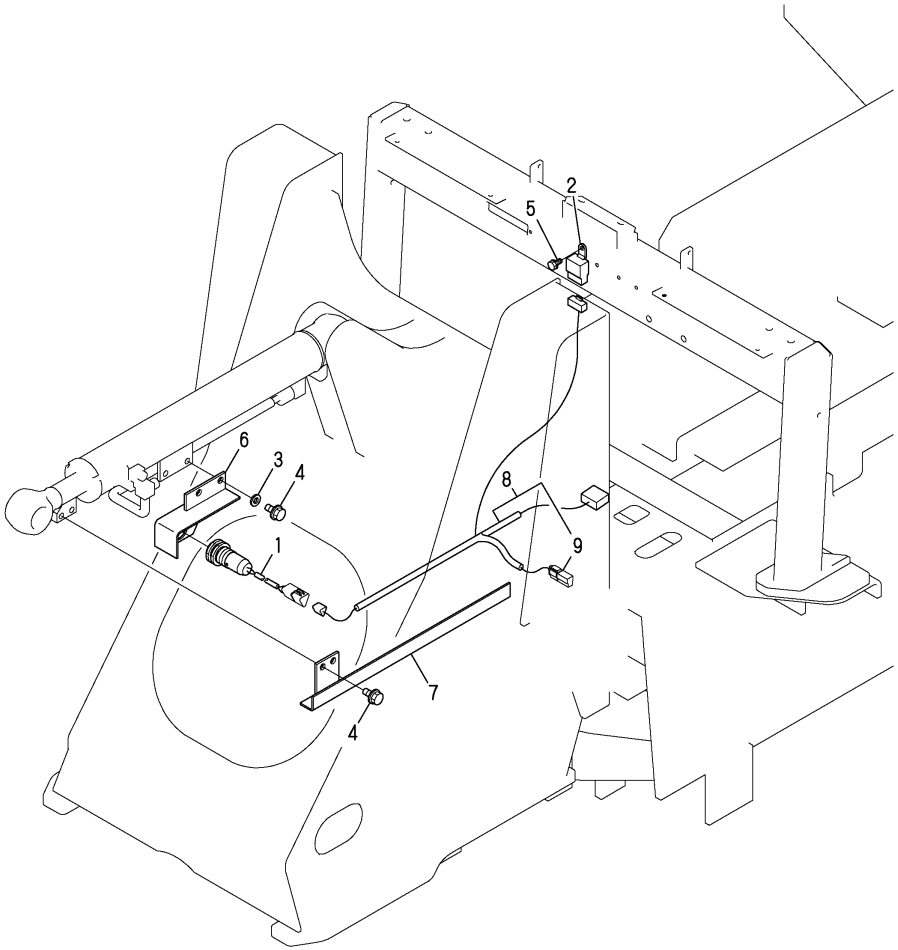

No.	Lev.	Parts No.	Description	Q'ty (A)	(B)	(C)	(D)	(E)	(F)	I	R
1	1	172527-17510	SENSOR, PROXIMITY	1	1	1	1				
2	1	119247-77100	RELAY, SAFETY	1	1	1	1				
3	1	22137-100000	WASHER, 10	2	2	2	2				
4	1	26013-100202	BOLT, M10X 20	4	4	4	4				
5	1	26013-060162	BOLT, M6X 16	1	1	1	1				
6	1	172524-17522	STAY ASSY, SENSOR	1	1	1	1				
7	1	172527-17531	BAR, SENSING	1	1	1	1				
8	1	172527-16650	HARNESS,WIRE O	1	1	1	1				
9	2	119643-66900	DIODE	1	1	1	1				

N:Old $\frac{\text{Yes}}{\text{No}}$ New, Q:Old $\frac{\text{No}}{\text{Yes}}$ New, R:Old $\frac{\text{Yes}}{\text{Yes}}$ New, S:Old $\frac{\text{No}}{\text{No}}$ New, W:Add, Z:Discontinued, F:Interchangeable by set, K:Q'ty Change

Copyright (C) YANMAR CO., LTD. All RightsReserved.

Fig.14. CLUTCH HOUSING & DRIVE SHAFT

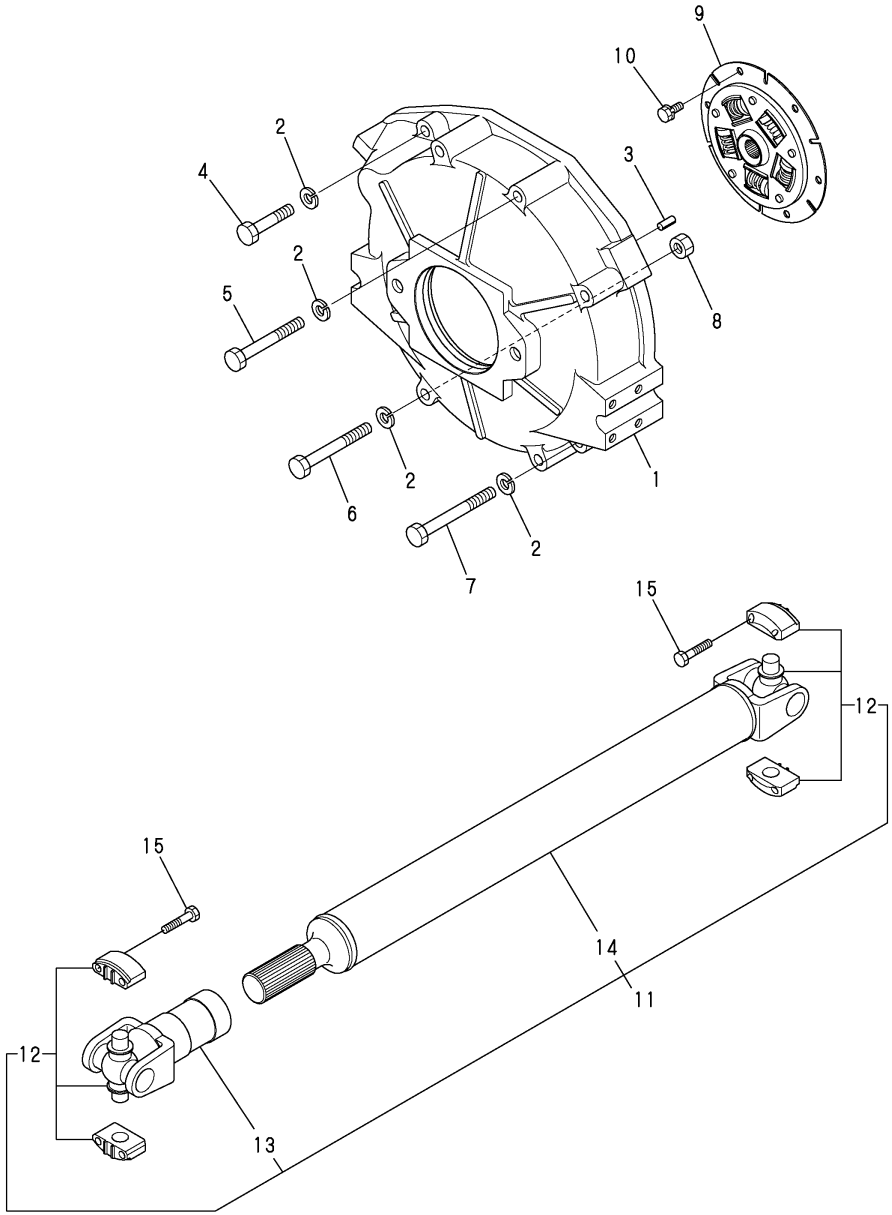

(A)=V3-5A (D)=V5-B
(B)=V3-5B (E)=
(C)=V4-5B (F)=

No.	Lev.	Parts No.	Description	Q'ty (A)	(B)	(C)	(D)	(E)	(F)	I	R
1	1	172527-21210	COVER, FLYWHEEL	1							
1A	1	172534-21210	COVER, FLYWHEEL		1	1	1				
2	1	22217-120000	WASHER, SPRING 12	8	8	8	8				
3	1	22351-080020	PIN, SPRING 8.0X20	2	2	2	2				
4	1	26116-120602	BOLT, M12X 60 PLATED	1	1	1	1				
5	1	26116-120952	BOLT, M12X 95 PLATED	2	2	2	2				
6	1	26116-121002	BOLT, M12X100 PLATED	2	2	2	2				
7	1	26116-121102	BOLT, M12X110 PLATED	3	3	3	3				
8	1	26716-120002	NUT, M12	2	2	2	2				
9	1	172527-21510	DISK, DAMPER	1							
9A	1	172534-21510	DISK, DAMPER		1	1	1				
10	1	26013-080162	BOLT, M8X 16	6	6	6	6				
11	1	172527-21800	SHAFT ASSY,PROPELLER	1	1						
11A	1	172528-21800	SHAFT ASSY,PROPELLER			1	1				
12	2	172527-21810	JOINT, UNIVERSAL	2	2	2	2				
13	2	172527-21820	YOKE,SLEEVE	1	1						
13A	2	172528-21820	YOKE,SLEEVE			1	1				
14	2	172527-21830	YOKE,SHAFT	1	1						
14A	2	172528-21830	YOKE, SHAFT			1	1				
15	1	26116-080402	BOLT, M8X 40 PLATED	8	8	8	8				

N:Old $\xleftarrow[\text{No}]{\text{Yes}}$ New, Q:Old $\xleftarrow[\text{Yes}]{\text{No}}$ New, R:Old $\xleftarrow[\text{Yes}]{\text{Yes}}$ New, S:Old $\xleftarrow[\text{No}]{\text{No}}$ New, W:Add, Z:Discontinued, F:Interchangeable by set, K:Q'ty Change

Copyright (C) YANMAR CO., LTD. All RightsReserved.

Fig.15. TRANSFER CASE

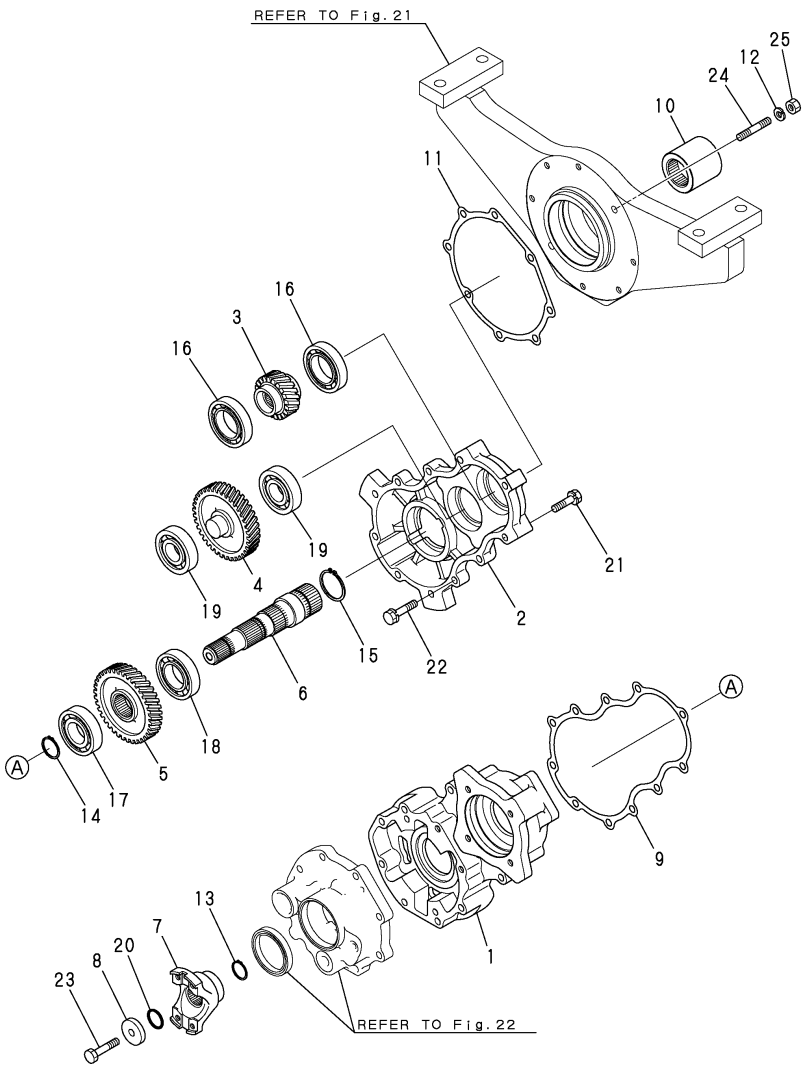

Remarks
(1)Interchangeable by simultaneous replacement with Ref.No.6-1,10-1.

(A)=V3-5A (D)=V5-B
(B)=V3-5B (E)=
(C)=V4-5B (F)=

No.	Lev.	Parts No.	Description	Q'ty (A)	(B)	(C)	(D)	(E)	(F)	I	R
1	1	172527-25710	CASE	1							
1A	1	187B01-25710	CASE		1	1	1				
2	1	172527-25720	CASE	1	1	1	1				
3	1	172527-25730	GEAR, INPUT	1							
3A	1	187B01-25910	GEAR, INPUT Z=26T		1	1	1				
4	1	172527-25740	GEAR, IDLE N=35	1							
4A	1	172527-25920	GEAR, IDLE Z=26		1	1	1				
5	1	172527-25750	GEAR, N=36	1							
5A	1	172527-25930	GEAR, N=42		1	1	1				
6	1	172527-25770	SHAFT, BRAKE	1	1	1	1				
6-1	1	172527-25771	SHAFT, BRAKE	1	1	1	1			F	1
	(A=MZZZZZ)	(B=MZZZZZ)	(C=MZZZZZ) (D=MZZZZZ)								
7	1	172527-25790	FLANGE, JOINT	1	1	1	1				
8	1	172527-25810	WASHER, 11X40.5X9	1	1	1	1				
9	1	172527-25820	GASKET	1	1	1	1				
10	1	172527-25840	COUPLING	1	1	1	1				
10-1	1	172527-25841	COUPLING, SPLINE	1	1	1	1			F	1
	(A=MZZZZZ)	(B=MZZZZZ)	(C=MZZZZZ) (D=MZZZZZ)								
11	1	172527-25850	GASKET	1	1	1	1				
12	1	22217-100000	WASHER, SPRING 10	2	2	2	2				
13	1	22242-000300	RING, 30	1	1	1	1				
14	1	22242-000350	RING, 35	1	1	1	1				
15	1	22242-000450	RING, 45	1	1	1	1				
16	1	24101-060094	BEARING, BALL 6009	2	2	2	2				
17	1	24101-062074	BEARING, BALL 6207	1	1	1	1				
18	1	24101-062084	BEARING, BALL 6208	1	1	1	1				
19	1	24101-063064	BEARING, BALL 6306	2	2	2	2				
20	1	24311-000240	O-RING, 1AP24.0	1	1	1	1				
21	1	26013-100452	BOLT, M10X 45	3	3	3	3				
22	1	26013-100452	BOLT, M10X 45	6	6	6	6				
23	1	26156-100502	BOLT, M10X 5 PLATED0	1	1	1	1				
24	1	26216-100452	STUD, M10X 45	2	2	2	2				
25	1	26716-100002	NUT, M10	2	2	2	2				

N:Old $\xleftarrow[\text{No}]{\text{Yes}}$ New, Q:Old $\xleftarrow[\text{Yes}]{\text{No}}$ New, R:Old $\xleftarrow[\text{Yes}]{\text{Yes}}$ New, S:Old $\xleftarrow[\text{No}]{\text{No}}$ New, W:Add, Z:Discontinued, F:Interchangeable by set, K:Q'ty Change

Copyright (C) YANMAR CO., LTD. All RightsReserved.

Fig.16. SPIRAL BEVEL GEAR

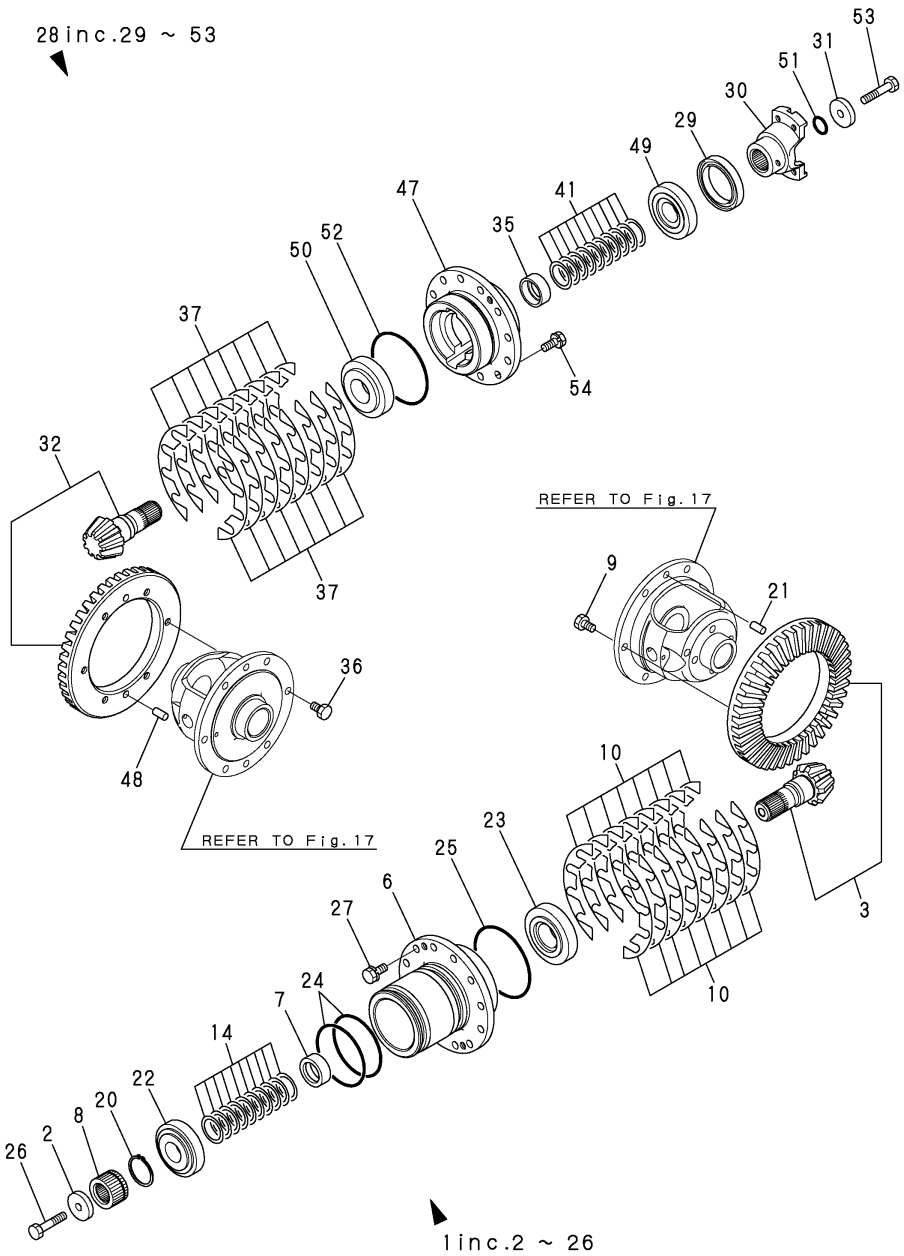

(A)=V3-5A (D)=V5-B
(B)=V3-5B (E)=
(C)=V4-5B (F)=

No.	Lev.	Parts No.	Description	Q'ty (A)	(B)	(C)	(D)	(E)	(F)	I	R
1	1	172527-26000	GEAR ASSY, BEVEL	1							
1A	1	172527-26300	GEAR ASSY, BEVEL		1						
1B	1	172528-26300	GEAR ASSY, BEVEL			1	1				
2	2	172527-25810	WASHER, 11X40.5X9	1	1	1	1				
3	2	172527-26010	GEAR SET, BEVEL	1							
3A	2	172527-26210	GEAR SET, BEVEL		1						
3B	2	172528-26210	GEAR SET, BEVEL			1	1				
6	2	172527-26040	HOLDER, BEARING	1	1	1	1				
7	2	172527-26050	COLLAR	1	1	1	1				
8	2	172527-26060	COLLAR, SPLINE	1	1	1	1				
9	2	172527-26070	BOLT, M10X18	6	6	6	6				
10	2	172527-26080	SHIM SET	1	1	1	1				
14	2	172527-26130	SHIM SET	1	1	1	1				
20	2	22242-000450	RING, 45	1	1	1	1				
21	2	22312-100200	PIN, PARALLEL M10X20	2							
21A	2	22312-100160	PIN, PARALLEL M10X16		2						
21B	2	22312-100180	PIN, PARALLEL M10X18			2	2				
22	2	24143-303060	BEARING, 30306D	1	1	1	1				
23	2	24144-303070	BEARING, 30307DH	1	1	1	1				
24	2	24311-000900	O-RING, 1AP90.0	2	2	2	2				
25	2	24321-001050	O-RING, 1AG105.0	1	1	1	1				
26	2	26156-100502	BOLT, M10X 5 PLATED0	1	1	1	1				
27	1	26013-100252	BOLT, M10X 25	12	12	12	12				
28	1	172527-26200	GEAR ASSY, BEVEL	1							
28A	1	172527-26400	GEAR ASSY, BEVEL		1						
28B	1	172528-26400	GEAR ASSY, BEVEL			1	1				
29	2	194447-14140	SEAL, OIL TC6Y577512	1	1	1	1				
30	2	172527-25790	FLANGE, JOINT	1	1	1	1				
31	2	172527-25810	WASHER, 11X40.5X9	1	1	1	1				
32	2	172527-26010	GEAR SET, BEVEL	1							
32A	2	172527-26210	GEAR SET, BEVEL		1						
32B	2	172528-26210	GEAR SET, BEVEL			1	1				
35	2	172527-26050	COLLAR	1	1	1	1				
36	2	172527-26070	BOLT, M10X18	6	6	6	6				
37	2	172527-26080	SHIM SET	1	1	1	1				
41	2	172527-26130	SHIM SET	1	1	1	1				
47	2	172527-26310	HOLDER, BEARING	1	1	1	1				
48	2	22312-100200	PIN, PARALLEL M10X20	2							
48A	2	22312-100160	PIN, PARALLEL M10X16		2						
48B	2	22312-100180	PIN, PARALLEL M10X18			2	2				
49	2	24143-303060	BEARING, 30306D	1	1	1	1				
50	2	24144-303070	BEARING, 30307DH	1	1	1	1				
51	2	24311-000240	O-RING, 1AP24.0	1	1	1	1				
52	2	24321-001050	O-RING, 1AG105.0	1	1	1	1				
53	2	26156-100502	BOLT, M10X 5 PLATED0	1	1	1	1				
54	1	26013-100252	BOLT, M10X 25	12	12	12	12				

N:Old $\overset{\text{Yes}}{\underset{\text{No}}{\leftrightarrows}}$ New, Q:Old $\overset{\text{No}}{\underset{\text{Yes}}{\leftrightarrows}}$ New, R:Old $\overset{\text{Yes}}{\underset{\text{Yes}}{\leftrightarrows}}$ New, S:Old $\overset{\text{No}}{\underset{\text{No}}{\leftrightarrows}}$ New, W:Add, Z:Discontinued, F:Interchangeable by set, K:Q'ty Change

Copyright (C) YANMAR CO., LTD. All RightsReserved.

Fig.17. DIFFERENTIAL GEAR

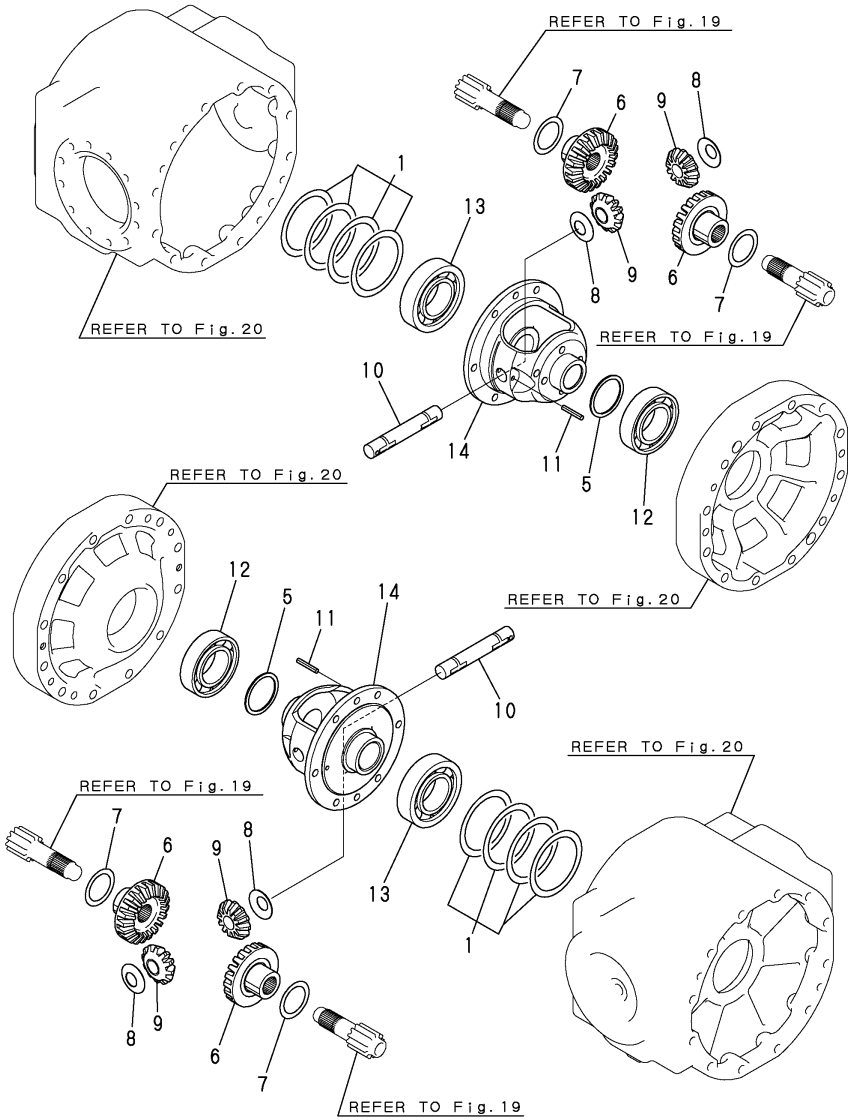

(A)=V3-5A (D)=V5-B
(B)=V3-5B (E)=
(C)=V4-5B (F)=

No.	Lev.	Parts No.	Description	Q'ty (A)	(B)	(C)	(D)	(E)	(F)	I	R
1	1	794251-13910	SHIM SET	4	4	4	4				
5	1	172527-26410	WASHER, W52X62X2	2	2						
5A	1	172528-26330	WASHER, W57X68X2			2	2				
6	1	194145-31520	GEAR, DIFFERENTIAL	4	4						
6A	1	194320-31560	GEAR, DIFFERENTIAL			4	4				
7	1	198360-31530	LINER, PINION	4	4						
7A	1	198320-31530	WASHER, DIFFERENTIAL			4	4				
8	1	198250-31630	WASHER, DIFFERENTIAL	4	4						
8A	1	198320-31630	WASHER, DIFFERENTIAL			4	4				
9	1	198250-31810	PINION, DIFFERENTIAL	4	4						
9A	1	198320-31570	PINION, DIFFERENTIAL			4	4				
10	1	198250-31820	SHAFT, DIFFERENTIAL	2	2						
10A	1	198320-31820	SHAFT, DIFFERENTIAL			2	2				
11	1	22351-060036	PIN, SPRING 6.0X36	2	2						
11A	1	22351-060050	PIN, SPRING 6.0X50			2	2				
12	1	24101-062104	BEARING, BALL 6210	2	2						
12A	1	24101-060114	BEARING, BALL 6011			2	2				
13	1	24101-062114	BEARING, BALL 6211	2	2	2	2				
14	1	172527-26320	CASE, DIFFERENTIAL	2	2						
14A	1	172528-26320	CASE, DIFFERENTIAL			2	2				

N:Old $\xleftrightarrow[\text{No}]{\text{Yes}}$ New, Q:Old $\xleftrightarrow[\text{Yes}]{\text{No}}$ New, R:Old $\xleftrightarrow[\text{Yes}]{\text{Yes}}$ New, S:Old $\xleftrightarrow[\text{No}]{\text{No}}$ New, W:Add, Z:Discontinued, F:Interchangeable by set, K:Q'ty Change

Copyright (C) YANMAR CO., LTD. All RightsReserved.

Fig.18. AXLE SHAFT

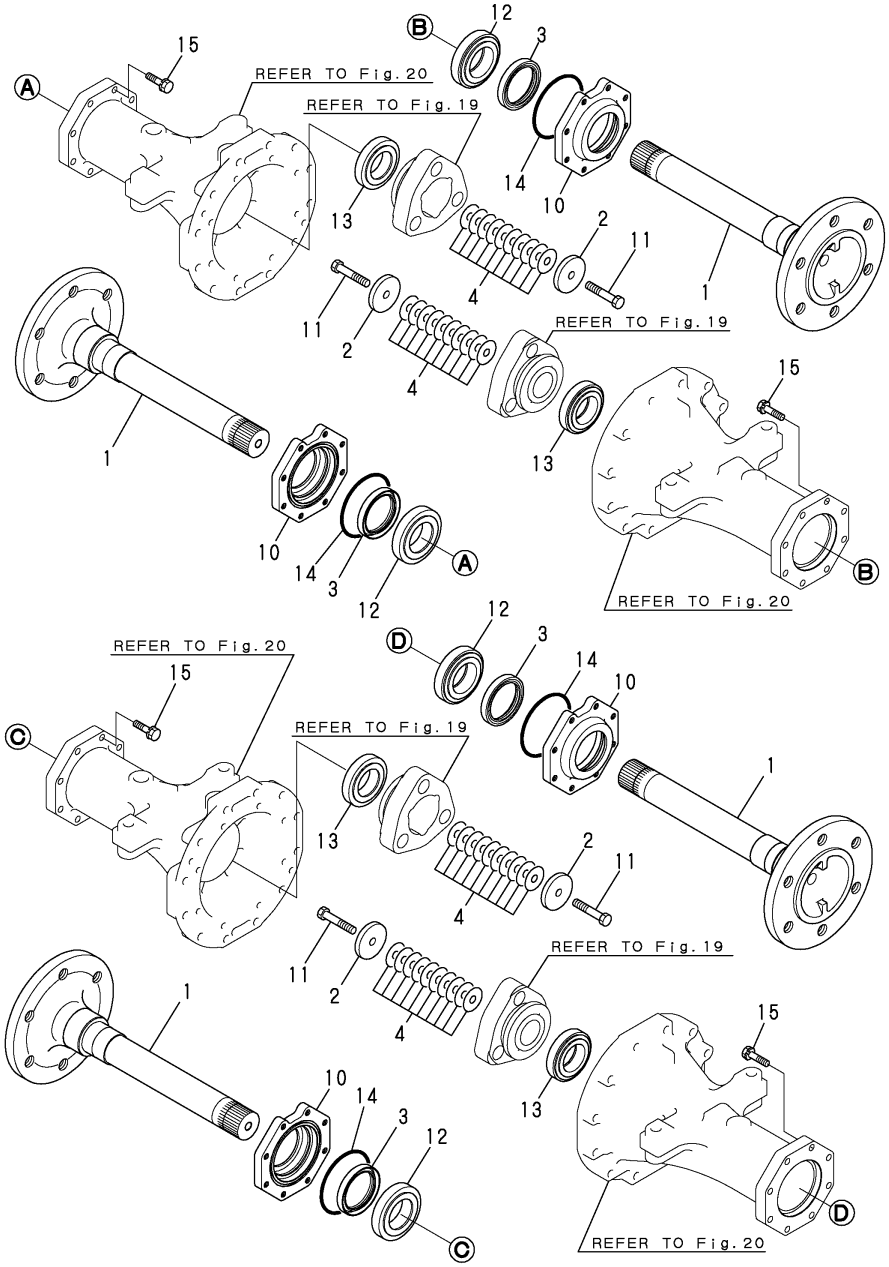

(A)=V3-5A (D)=V5-B
(B)=V3-5B (E)=
(C)=V4-5B (F)=

No.	Lev.	Parts No.	Description	Q'ty (A)	(B)	(C)	(D)	(E)	(F)	I	R
1	1	172527-26710	SHAFT, AXLE	4	4						
1A	1	172528-26710	SHAFT, AXLE			4	4				
2	1	172527-26730	WASHER, W13X63X9	4	4	4	4				
3	1	172520-26740	SEAL TC6Y 70X88X12	4	4	4	4				
4	1	172527-26740	SHIM SET	4	4	4	4				
10	1	172520-26780	COVER, AXLE	4	4	4	4				
11	1	172527-26910	BOLT, M12X65	4	4	4	4				
12	1	24141-302110	BEARING, 30211	4	4	4	4				
13	1	24141-322100	BEARING, 32210	4	4						
13A	1	24141-320110	BEARING, 32011			4	4				
14	1	24321-001100	O-RING, 1AG110.0	4	4	4	4				
15	1	26013-100402	BOLT, M10X 40	32	32	32	32				

N:Old ◄Yes/No► New, Q:Old ◄No/Yes► New, R:Old ◄Yes/Yes► New, S:Old ◄No/No► New, W:Add, Z:Discontinued, F:Interchangeable by set, K:Q'ty Change

Copyright (C) YANMAR CO., LTD. All RightsReserved.

Fig.19. FINAL GEAR

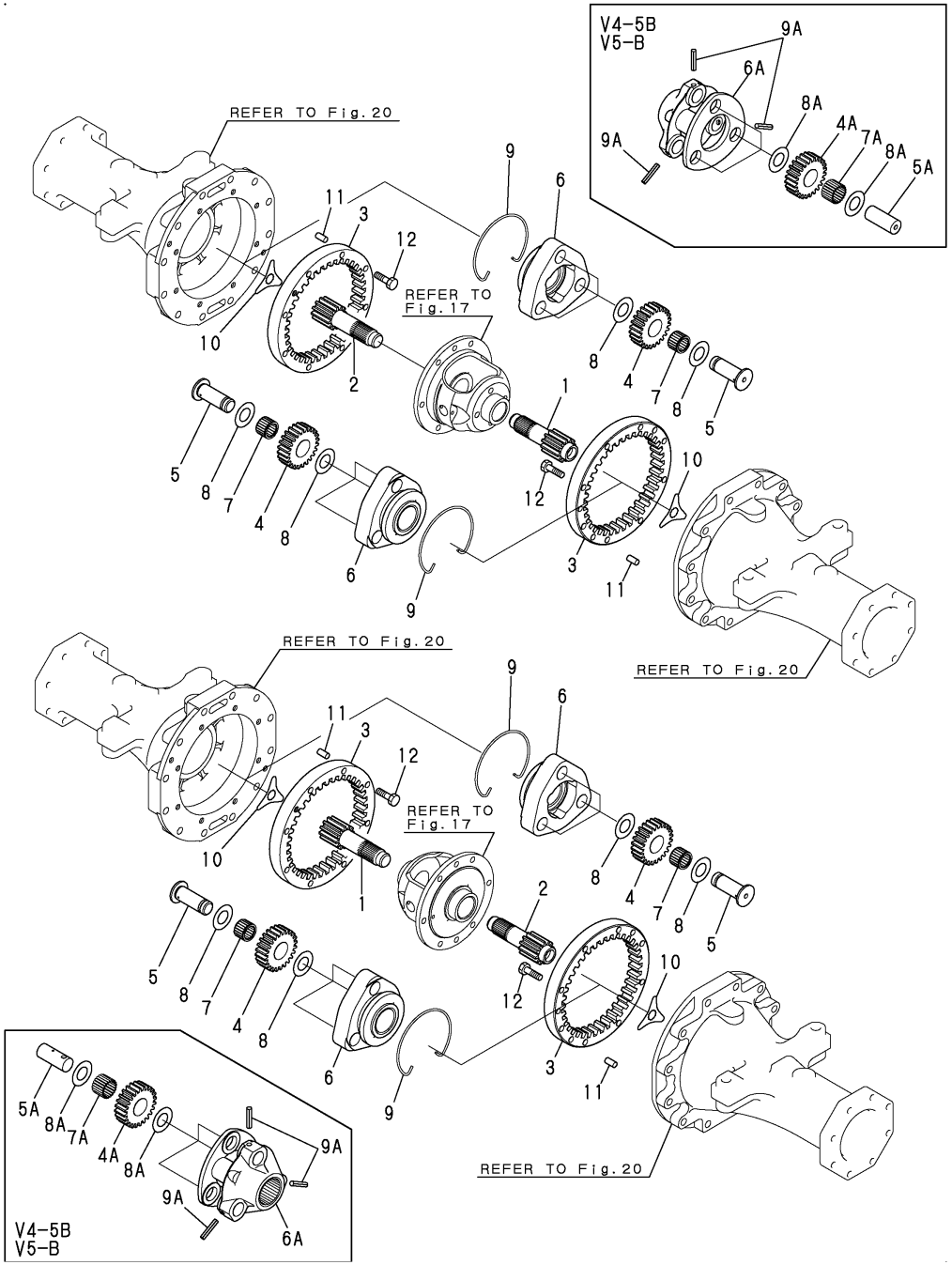

(A)=V3-5A (D)=V5-B
(B)=V3-5B (E)=
(C)=V4-5B (F)=

No.	Lev.	Parts No.	Description	Q'ty (A)	(B)	(C)	(D)	(E)	(F)	I	R
1	1	172527-28310	GEAR, SUN	2	2						
1A	1	172528-28310	GEAR, SUN			2	2				
2	1	172527-28320	GEAR, SUN	2	2						
2A	1	172528-28320	GEAR, SUN			2	2				
3	1	172527-28330	GEAR, INTERNAL	4	4						
3A	1	172528-28330	GEAR, INTERNAL			4	4				
4	1	198250-33540	PINION, PLANETARY	12	12						
4A	1	198320-33540	PINION, PLANETARY			12	12				
5	1	198250-33550	SHAFT, PLANETARY	12	12						
5A	1	198320-33550	SHAFT, PLANETARY			12	12				
6	1	198240-33570	CARRIER, PLANETARY	4	4						
6A	1	198320-33570	CARRIER, PLANETARY			4	4				
7	1	198250-33570	NEEDLE, T253324	12	12						
7A	1	198320-33560	NEEDLE, 4.5X31.8			12	12				
8	1	194640-33590	WASHER, 25X42X1	24	24						
8A	1	198320-33620	WASHER, 26X42X1			24	24				
9	1	198240-33630	CIRCLIP, 124	4	4						
9A	1	22351-080040	PIN, SPRING 8.0X40			12	12				
10	1	194640-34150	WASHER, THRUST	4	4	4	4				
11	1	22312-100200	PIN, PARALLEL M10X20	8	8	8	8				
12	1	26116-100352	BOLT, M10X 35 PLATED	32	32						
12A	1	26116-100452	BOLT, M10X 45 PLATED			32	32				

N:Old $\xleftarrow[\text{No}]{\text{Yes}}$ New, Q:Old $\xleftarrow[\text{Yes}]{\text{No}}$ New, R:Old $\xleftarrow[\text{Yes}]{\text{Yes}}$ New, S:Old $\xleftarrow[\text{No}]{\text{No}}$ New, W:Add, Z:Discontinued, F:Interchangeable by set, K:Q'ty Change

Copyright (C) YANMAR CO., LTD. All RightsReserved.

Fig.20. AXLE CASE

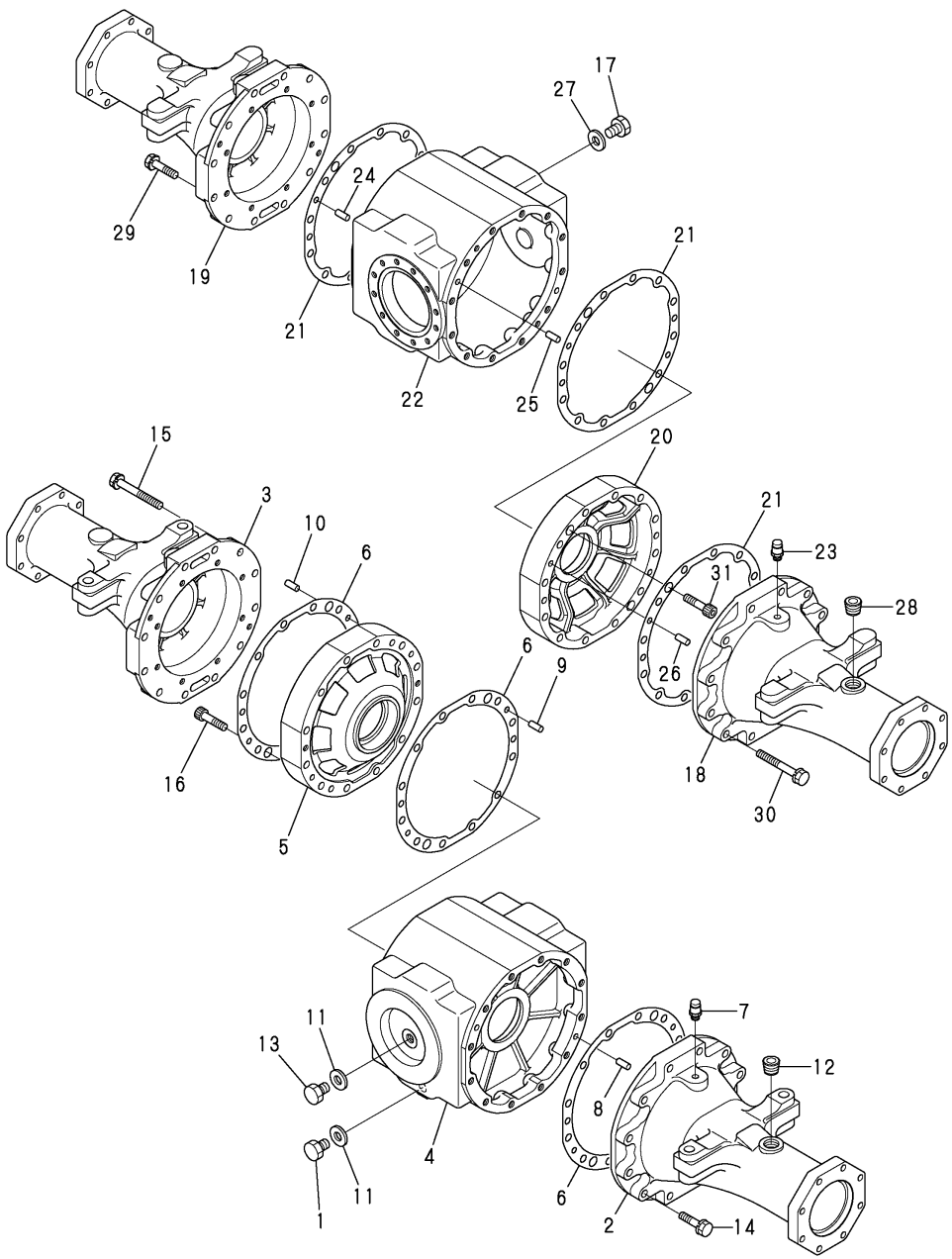

(A)=V3-5A (D)=V5-B
(B)=V3-5B (E)=
(C)=V4-5B (F)=

No.	Lev.	Parts No.	Description	Q'ty (A)	(B)	(C)	(D)	(E)	(F)	I	R
1	1	177035-02920	PLUG, MAGNET M16X1.5	1	1	1	1				
2	1	172527-31110	CASE, AXLE	1	1						
2A	1	172528-31110	CASE, AXLE			1	1				
3	1	172527-31120	CASE, AXLE	1	1						
3A	1	172528-31120	CASE, AXLE			1	1				
4	1	172527-31150	CASE	1	1	1	1				
5	1	172527-31160	HOLDER, BEARING	1	1	1	1				
6	1	172527-31170	GASKET, AXLE CASE	3	3	3	3				
7	1	1E6681-56621	BREATHER	1							
7-1	1	172527-35900	BREATHER(ACCEL.	1	1	1	1			R	
	(A=M/#53078)										
8	1	22312-100200	PIN, PARALLEL M10X20	2	2	2	2				
9	1	22312-100200	PIN, PARALLEL M10X20	2	2	2	2				
10	1	22312-100200	PIN, PARALLEL M10X20	2	2	2	2				
11	1	23414-160000	GASKET, 16X1.0	2	2	2	2				
12	1	23871-060000	PLUG, R06	1	1	1	1				
13	1	23887-160002	PLUG, 16	1	1	1	1				
14	1	26013-120502	BOLT, M12X 50	12	12	12	12				
15	1	26013-120952	BOLT, M12X 95	12	12	12	12				
16	1	26450-100452	BOLT, M10X 45	2	2	2	2				
17	1	177035-02920	PLUG, MAGNET M16X1.5	1	1	1	1				
18	1	172527-31130	CASE, AXLE	1	1						
18A	1	172528-31130	CASE, AXLE			1	1				
19	1	172527-31140	CASE, AXLE	1	1						
19A	1	172528-31140	CASE, AXLE			1	1				
20	1	172527-31160	HOLDER, BEARING	1	1	1	1				
21	1	172527-31170	GASKET, AXLE CASE	3	3	3	3				
22	1	172527-31250	CASE	1	1	1	1				
23	1	1E6681-56621	BREATHER	1							
23-1	1	172527-35900	BREATHER(ACCEL.	1	1	1	1			R	
	(A=M/#53078)										
24	1	22312-100200	PIN, PARALLEL M10X20	2	2	2	2				
25	1	22312-100200	PIN, PARALLEL M10X20	2	2	2	2				
26	1	22312-100200	PIN, PARALLEL M10X20	2	2	2	2				
27	1	23414-160000	GASKET, 16X1.0	1	1	1	1				
28	1	23871-060000	PLUG, R06	1	1	1	1				
29	1	26013-120502	BOLT, M12X 50	12	12	12	12				
30	1	26013-120952	BOLT, M12X 95	12	12	12	12				
31	1	26450-100452	BOLT, M10X 45	2	2	2	2				

N:Old $\frac{\text{Yes}}{\text{No}}$ New, Q:Old $\frac{\text{No}}{\text{Yes}}$ New, R:Old $\frac{\text{Yes}}{\text{Yes}}$ New, S:Old $\frac{\text{No}}{\text{No}}$ New, W:Add, Z:Discontinued, F:Interchangeable by set, K:Q'ty Change

Copyright (C) YANMAR CO., LTD. All RightsReserved.

Fig.21. AXLE HOLDER

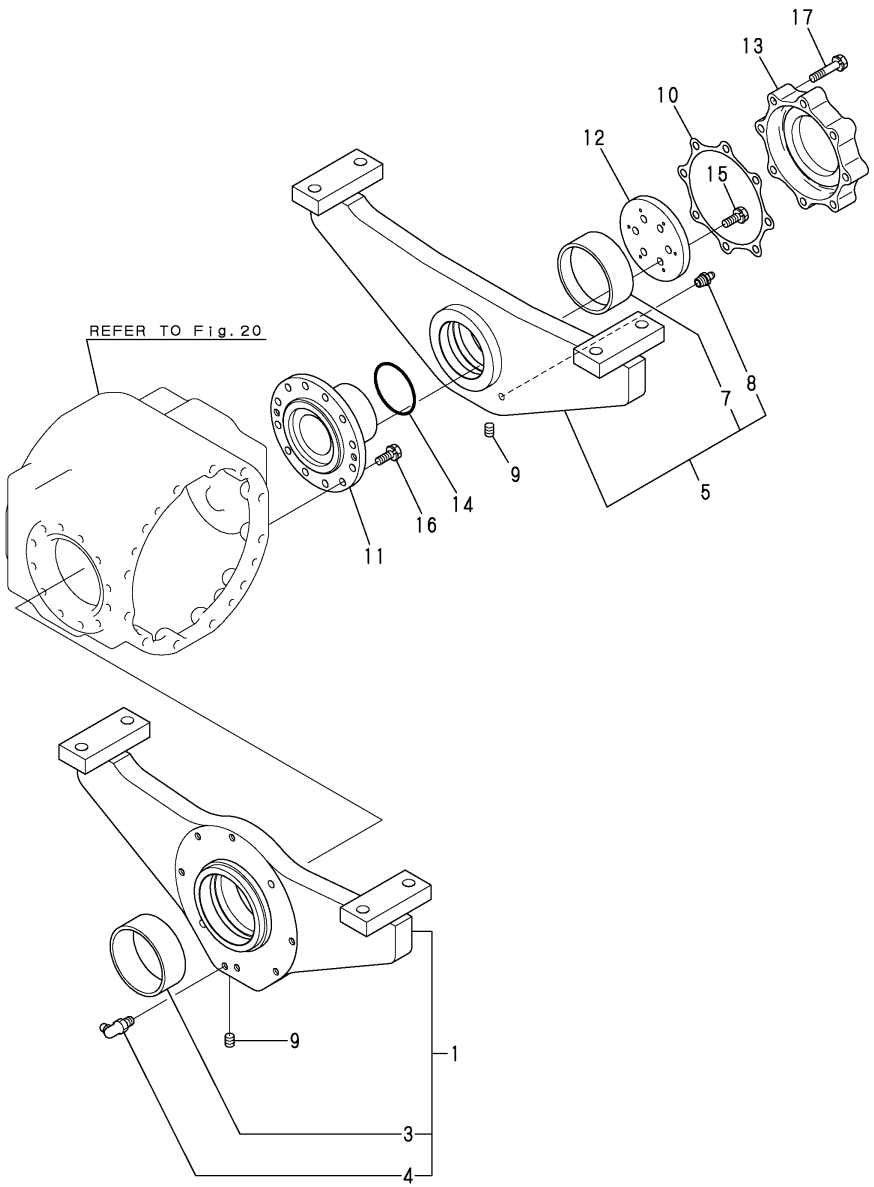

(A)=V3-5A (D)=V5-B
(B)=V3-5B (E)=
(C)=V4-5B (F)=

No.	Lev.	Parts No.	Description	Q'ty (A)	(B)	(C)	(D)	(E)	(F)	I	R
1	1	172527-33100	HOLDER ASSY, AXLE	1	1	1	1				
3	2	172513-52541	BUSH	1	1	1	1				
4	2	24764-040000	NIPPLE, GREASE B	1	1	1	1				
5	1	172527-33200	HOLDER, AXEL R	1	1	1	1				
7	2	172527-33260	BUSH, 85X40	1	1	1	1				
8	2	24764-020000	NIPPLE, GREASE R1/8	1	1	1	1				
9	1	23871-010000	PLUG, R01	2	2	2	2				
10	1	172527-31190	GASKET	1	1	1	1				
11	1	172527-33510	PIN	1	1	1	1				
12	1	172527-33520	PLATE	1	1	1	1				
13	1	172527-33530	COVER	1	1	1	1				
14	1	24311-000750	O-RING, 1AP75.0	1	1	1	1				
15	1	26013-100252	BOLT, M10X 25	6	6	6	6				
16	1	26013-100252	BOLT, M10X 25	12	12	12	12				
17	1	26013-100452	BOLT, M10X 45	8							
17-1	1	26013-100502	BOLT, M10X 50	8	8	8	8			N	
	(A=M/#53110)										

N:Old $\frac{\text{Yes}}{\text{No}}$ New, Q:Old $\frac{\text{No}}{\text{Yes}}$ New, R:Old $\frac{\text{Yes}}{\text{Yes}}$ New, S:Old $\frac{\text{No}}{\text{No}}$ New, W:Add, Z:Discontinued, F:Interchangeable by set, K:Q'ty Change

Copyright (C) YANMAR CO., LTD. All RightsReserved.

Fig.22. CENTER BRAKE

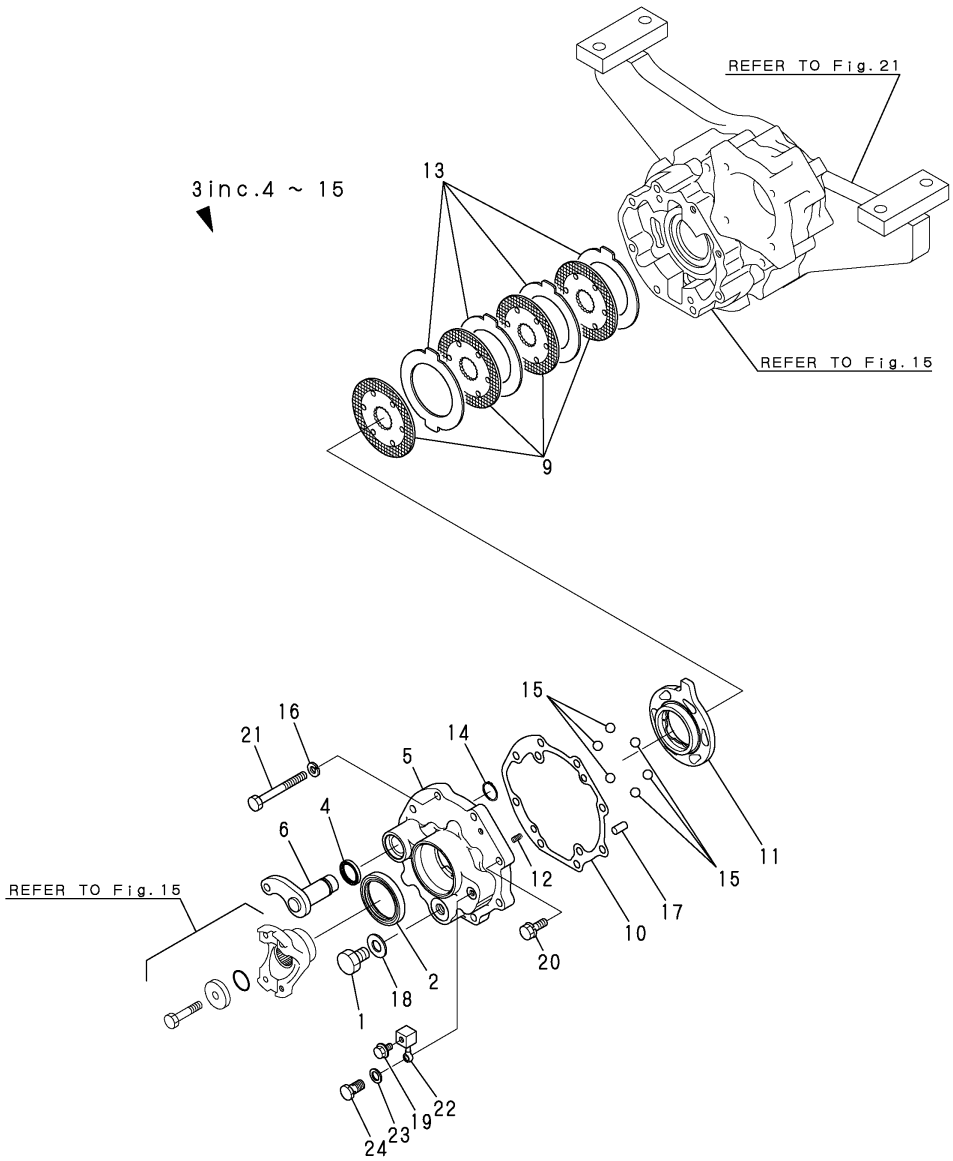

(A)=V3-5A (D)=V5-B
(B)=V3-5B (E)=
(C)=V4-5B (F)=

No.	Lev.	Parts No.	Description	Q'ty (A)	(B)	(C)	(D)	(E)	(F)	I	R
1	1	177035-02920	PLUG, MAGNET M16X1.5	1	1	1	1				
2	1	194447-14140	SEAL, OIL TC6Y577512	1	1	1	1				
3	1	172527-34400	BRAKE ASSY	1	1	1	1				
4	2	198290-32750	SEAL, OIL TC253506	1	1	1	1				
5	2	172527-34410	CASE, BRAKE	1	1	1	1				
6	2	172527-34420	CAMSHAFT, BRAKE	1	1	1	1				
9	2	172527-34430	DISK, FRICTION	4	4	4	4				
10	2	172527-34440	GASKET, CASE	1	1	1	1				
11	2	198010-36310	ACTUATOR	1	1	1	1				
12	2	194205-36320	SPRING, ACTUATOR	2	2	2	2				
13	2	198010-36390	PLATE, STEEL 118	4	4	4	4				
14	2	22242-000250	RING, 25	1	1	1	1				
15	2	24190-160001	BALL, STEEL 1/2	6	6	6	6				
16	1	22217-100000	WASHER, SPRING 10	6	6	6	6				
17	1	22312-100200	PIN, PARALLEL M10X20	2	2	2	2				
18	1	23414-160000	GASKET, 16X1.0	1	1	1	1				
19	1	23490-080002	PLUG, 8	1	1	1	1				
20	1	26013-100302	BOLT, M10X 30	2	2	2	2				
21	1	26116-100902	BOLT, M10X 90 PLATED	6	6	6	6				
22	1	172527-34470	JOINT	1	1	1	1				
23	1	23414-080000	GASKET, 8X1.0	2	2	2	2				
24	1	23857-030000	BOLT, JOINT 3	1	1	1	1				

N:Old $\xleftrightarrow[\text{No}]{\text{Yes}}$ New, Q:Old $\xleftrightarrow[\text{Yes}]{\text{No}}$ New, R:Old $\xleftrightarrow[\text{Yes}]{\text{Yes}}$ New, S:Old $\xleftrightarrow[\text{No}]{\text{No}}$ New, W:Add, Z:Discontinued, F:Interchangeable by set, K:Q'ty Change

Copyright (C) YANMAR CO., LTD. All RightsReserved.

Fig.23. TIRE & DISKE

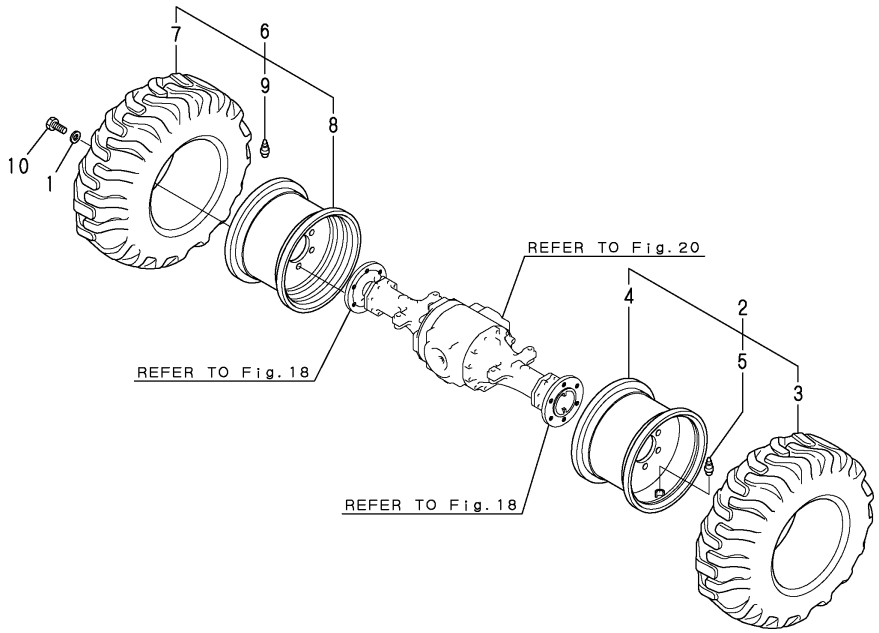

(A)=V3-5A (D)=V5-B
(B)=V3-5B (E)=
(C)=V4-5B (F)=

No.	Lev.	Parts No.	Description	Q'ty (A)	(B)	(C)	(D)	(E)	(F)	I	R
1	1	172520-31210	WASHER	24	24	24	24				
2	1	172527-35110	TIRE ASSY, L	2	2						
2A	1	172528-35110	TIRE ASSY, L			2	2				
3	2	172516-35130	TIRE	2	2						
3A	2	172522-35130	TIRE			2	2				
4	2	172527-35150	DISK	2	2						
4A	2	172528-35150	DISK			2	2				
5	2	172513-35161	VALVE	2	2	2	2				
6	1	172527-35120	TIRE ASSY, R	2	2						
6A	1	172528-35120	TIRE ASSY, R			2	2				
7	2	172516-35130	TIRE	2	2						
7A	2	172522-35130	TIRE			2	2				
8	2	172527-35150	DISK	2	2						
8A	2	172528-35150	DISK			2	2				
9	2	172513-35161	VALVE	2	2	2	2				
10	1	26156-200352	BOLT, M20X 35 PLATED	24	24	24	24				

N:Old $\overset{\text{Yes}}{\underset{\text{No}}{\leftrightarrow}}$ New, Q:Old $\overset{\text{No}}{\underset{\text{Yes}}{\leftrightarrow}}$ New, R:Old $\overset{\text{Yes}}{\underset{\text{Yes}}{\leftrightarrow}}$ New, S:Old $\overset{\text{No}}{\underset{\text{No}}{\leftrightarrow}}$ New, W:Add, Z:Discontinued, F:Interchangeable by set, K:Q'ty Change

Copyright (C) YANMAR CO., LTD. All RightsReserved.

Fig.24. SNOW TIRE(OPTIONAL)

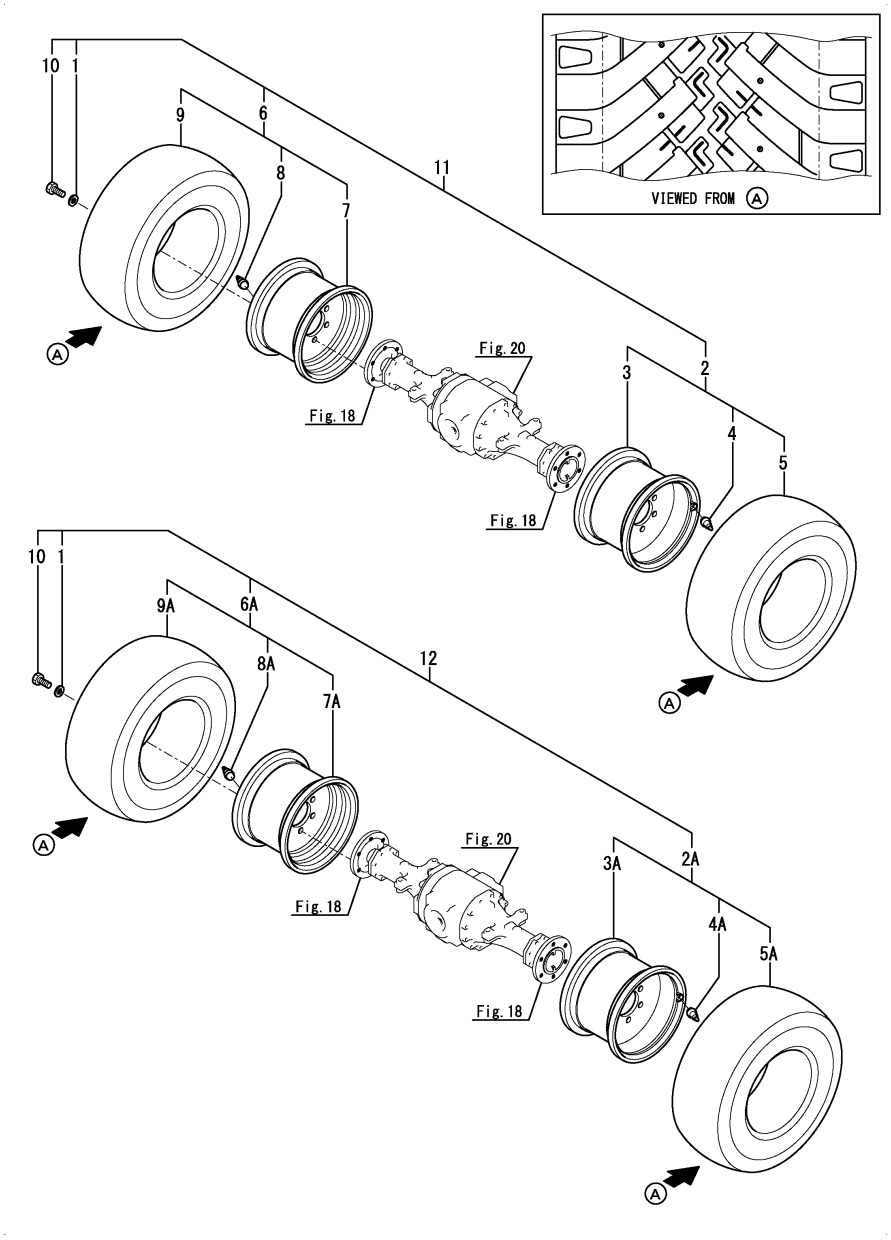

(A)=V3-5A (D)=V5-B
(B)=V3-5B (E)=
(C)=V4-5B (F)=

No.	Lev.	Parts No.	Description	Q'ty (A)	(B)	(C)	(D)	(E)	(F)	I	R
1	1	172520-31210	WASHER	24	24	24	24				
2	1	172527-35310	TIRE ASSY, SNOW L	2	2						
2A	1	172528-35310	TIRE ASSY, SNOW L			2	2				
3	2	172527-35150	DISK	2	2						
3A	2	172528-35150	DISK			2	2				
4	2	172513-35161	VALVE	2	2						
4A	2	172522-35160	VALVE (TR618A			2	2				
5	2	172527-35330	SNOW TIRE	2	2						
5A	2	172528-35330	TIRE, SNOW			2	2				
6	1	172527-35320	TIRE ASSY, SNOW R	2	2						
6A	1	172528-35320	TIRE ASSY, SNOW R			2	2				
7	2	172527-35150	DISK	2	2						
7A	2	172528-35150	DISK			2	2				
8	2	172513-35161	VALVE	2	2						
8A	2	172522-35160	VALVE (TR618A			2	2				
9	2	172527-35330	SNOW TIRE	2	2						
9A	2	172528-35330	TIRE, SNOW			2	2				
10	1	26156-200352	BOLT, M20X 35 PLATED	24	24	24	24				
11	1	172538-08550	TIRE KIT, SNOW	1	1						1
12	1	172539-08550	TIRE KIT, SNOW			1	1				2

Remarks
(1)Include No.1, 2, 6 & 10.
(2)Include No.1, 2A, 6A & 10.

N:Old $\xleftarrow[\text{No}]{\text{Yes}}$ New, Q:Old $\xleftarrow[\text{Yes}]{\text{No}}$ New, R:Old $\xleftarrow[\text{Yes}]{\text{Yes}}$ New, S:Old $\xleftarrow[\text{No}]{\text{No}}$ New, W:Add, Z:Discontinued, F:Interchangeable by set, K:Q'ty Change

Copyright (C) YANMAR CO., LTD. All RightsReserved.

Fig.25. TIRE(PLATED)(OPTIONAL)

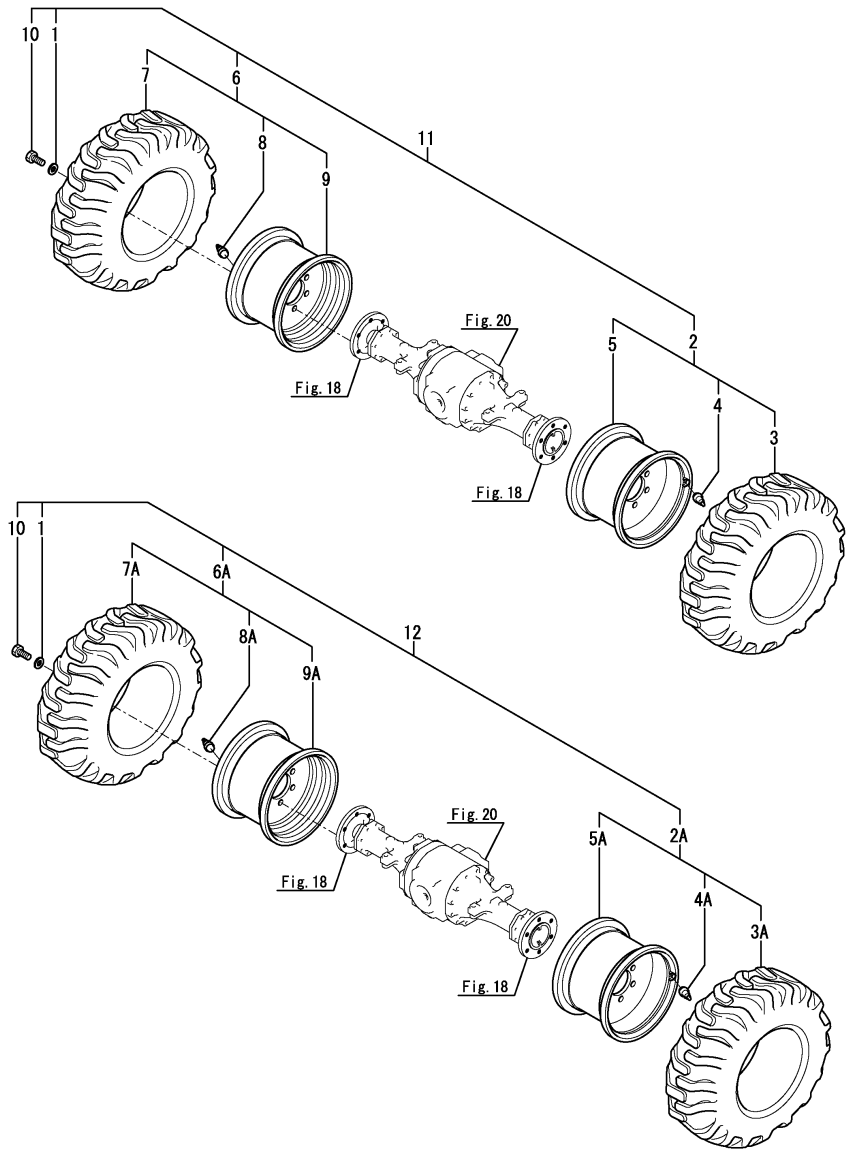

(A)=V3-5A (D)=V5-B
(B)=V3-5B (E)=
(C)=V4-5B (F)=

No.	Lev.	Parts No.	Description	Q'ty (A)	(B)	(C)	(D)	(E)	(F)	I	R
1	1	172520-31210	WASHER	24	24	24	24				
2	1	172527-35411	TIRE ASSY, L	2	2						
2A	1	172528-35411	TIRE ASSY			2	2				
3	2	172516-35130	TIRE	2	2						
3A	2	172522-35130	TIRE			2	2				
4	2	172513-35161	VALVE	2	2						
4A	2	172522-35160	VALVE (TR618A			2	2				
5	2	172527-35451	DISK	2	2						
5A	2	172528-35451	DISK			2	2				
6	1	172527-35421	TIRE ASSY, R	2	2						
6A	1	172528-35421	TIRE ASSY			2	2				
7	2	172516-35130	TIRE	2	2						
7A	2	172522-35130	TIRE			2	2				
8	2	172513-35161	VALVE	2	2						
8A	2	172522-35160	VALVE (TR618A			2	2				
9	2	172527-35451	DISK	2	2						
9A	2	172528-35451	DISK			2	2				
10	1	26156-200352	BOLT, M20X 35 PLATED	24	24	24	24				
11	1	172538-08570	TIRE KIT, PLATING	1	1						1
12	1	172539-08570	TIRE KIT, PLATING			1	1				2

Remarks
(1)Include No.1, 2, 6 & 10.
(2)Include No.1, 2A, 6A & 10.

N:Old $\frac{\text{Yes}}{\text{No}}$ New, Q:Old $\frac{\text{No}}{\text{Yes}}$ New, R:Old $\frac{\text{Yes}}{\text{Yes}}$ New, S:Old $\frac{\text{No}}{\text{No}}$ New, W:Add, Z:Discontinued, F:Interchangeable by set, K:Q'ty Change

Copyright (C) YANMAR CO., LTD. All RightsReserved.

Fig.26. INCHING PEDAL

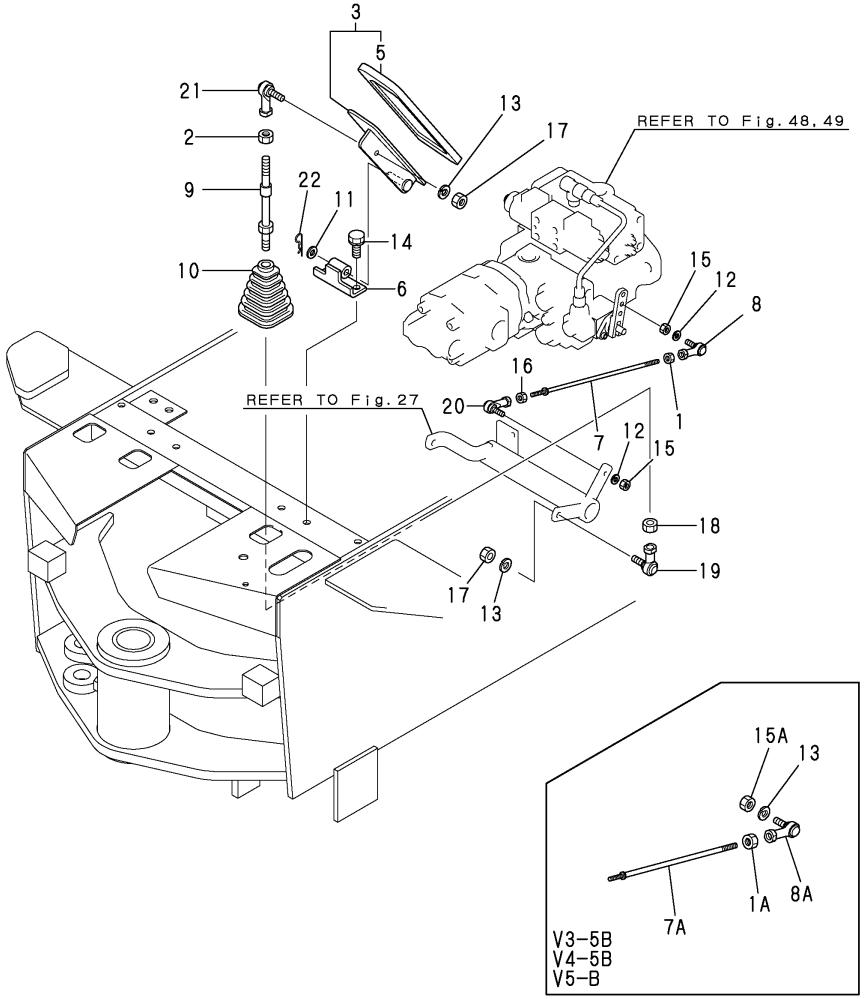

(A)=V3-5A (D)=V5-B
(B)=V3-5B (E)=
(C)=V4-5B (F)=

No.	Lev.	Parts No.	Description	Q'ty (A)	(B)	(C)	(D)	(E)	(F)	I	R
1	1	194130-01390	NUT, M6	1							
1A	1	194990-20170	NUT, M8		1	1	1				
2	1	194990-20170	NUT, M8	1	1	1	1				
3	1	172527-42100	PEDAL ASSY, INCHING	1	1	1	1				
5	2	172524-42180	PAD, PEDAL	1	1	1	1				
6	1	172527-42140	STAY	1	1	1	1				
7	1	172527-42170	LINK ROD	1							
7A	1	172534-42170	ROD ASSY,INCHING		1	1	1				
8	1	172527-42240	BALL, LINK 6L	1							
8A	1	1E6740-64200	BALL, LINK		1	1	1				
9	1	172524-42360	LINK ROD	1	1	1	1				
10	1	172520-46150	BOOT	1	1	1	1				
11	1	22137-100000	WASHER, 10	1	1	1	1				
12	1	22217-060000	WASHER, SPRING 6	2	1	1	1				
13	1	22217-080000	WASHER, SPRING 8	2	3	3	3				
14	1	26013-100252	BOLT, M10X 25	2	2	2	2				
15	1	26716-060002	NUT, M6	2	1	1	1				
15A	1	26716-080002	NUT, M8		1	1	1				
16	1	26716-060002	NUT, M6	1	1	1	1				
17	1	26716-080002	NUT, M8	2	2	2	2				
18	1	26716-080002	NUT, M8	1	1	1	1				
19	1	1E4760-43090	BALL RBL8,LINK	1	1	1	1				
20	1	172446-45820	LINK BALL 6	1	1	1	1				
21	1	1E6740-64200	BALL, LINK	1	1	1	1				
22	1	22372-100000	PIN, SNAP 10	1	1	1	1				

N:Old $\xleftarrow[\text{No}]{\text{Yes}}$ New, Q:Old $\xleftarrow[\text{Yes}]{\text{No}}$ New, R:Old $\xleftarrow[\text{Yes}]{\text{Yes}}$ New, S:Old $\xleftarrow[\text{No}]{\text{No}}$ New, W:Add, Z:Discontinued, F:Interchangeable by set, K:Q'ty Change

Copyright (C) YANMAR CO., LTD. All RightsReserved.

Fig.27. BRAKET PEDAL

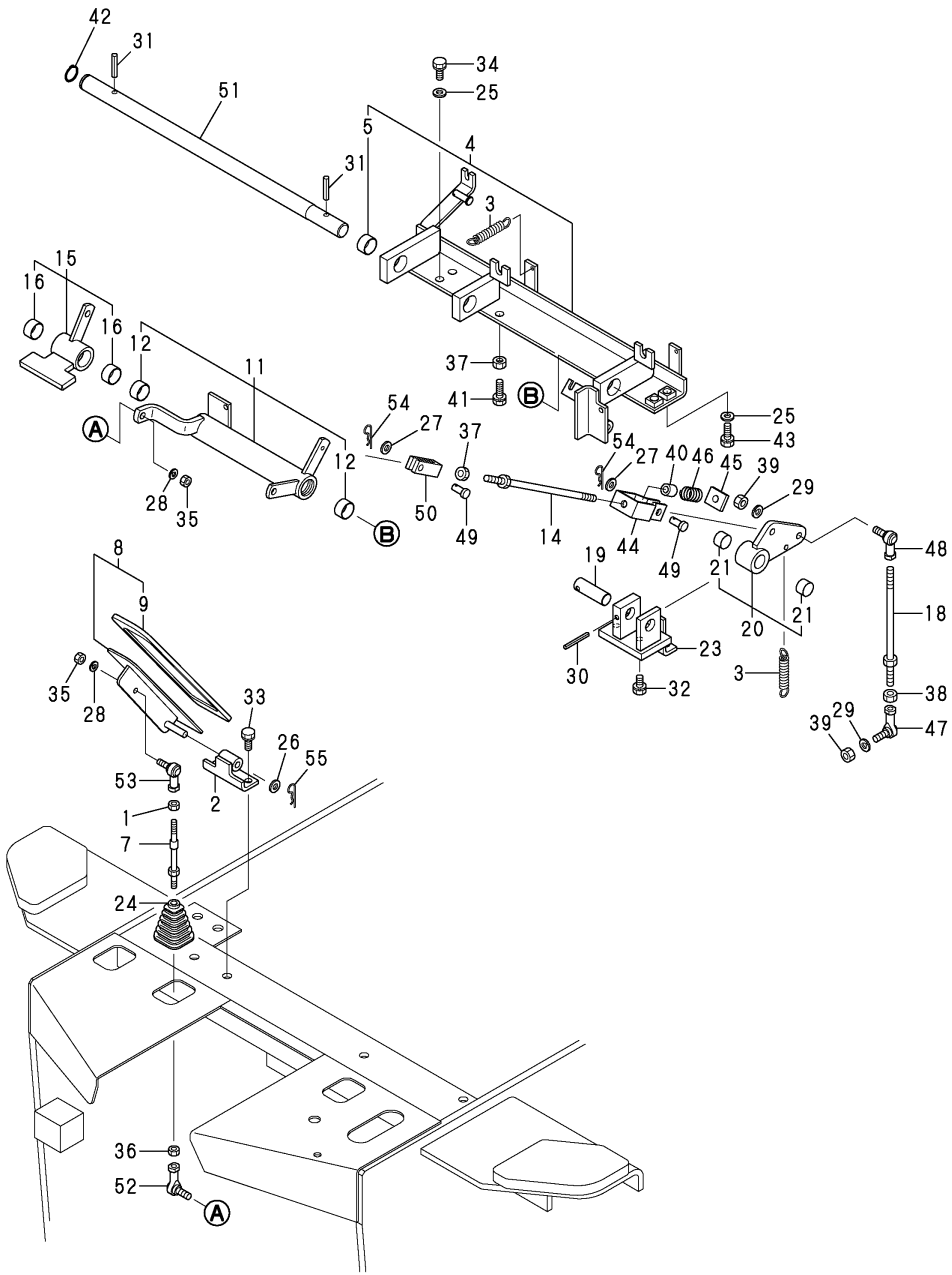

(A)=V3-5A (D)=V5-B
(B)=V3-5B (E)=
(C)=V4-5B (F)=

No.	Lev.	Parts No.	Description	Q'ty (A)	(B)	(C)	(D)	(E)	(F)	I	R
1	1	194990-20170	NUT, M8	1	1	1	1				
2	1	172527-42140	STAY	1	1	1	1				
3	1	172524-42190	SPRING, RETURN	2	2	2	2				
4	1	172527-42300	HOLDER,CAM	1	1	1	1				
5	2	24550-025150	BUSH, 25X15	3	3	3	3				
7	1	172524-42360	LINK ROD	1	1	1	1				
8	1	172527-42400	PEDAL, BRAKE	1	1	1	1				
9	2	172524-42180	PAD, PEDAL	1	1	1	1				
11	1	172527-42500	CAM ASSY, LINK	1	1	1	1				
12	2	24550-025150	BUSH, 25X15	2	2	2	2				
14	1	172524-42520	ROD B,LINK	1	1	1	1				
15	1	172527-42600	CAM ASSY, LINK	1	1	1	1				
16	2	24550-025150	BUSH, 25X15	2	2	2	2				
18	1	172522-42620	LINK ROD	1	1						
18A	1	172528-42621	ROD ASSY,LINK B			1	1				
19	1	172527-42680	SHAFT	1	1	1	1				
20	1	172527-42700	CAM ASSY, LINK	1	1	1	1				
21	2	24550-020150	BUSH, 20X15	2	2	2	2				
23	1	172527-42730	HOLDER,CAM B	1	1	1	1				
24	1	172520-46150	BOOT	1	1	1	1				
25	1	22137-100000	WASHER, 10	4	4	4	4				
26	1	22137-100000	WASHER, 10	1	1	1	1				
27	1	22137-100000	WASHER, 10	2	2	2	2				
28	1	22217-080000	WASHER, SPRING 8	2	2	2	2				
29	1	22217-100000	WASHER, SPRING 10	2	2	2	2				
30	1	22351-060050	PIN, SPRING 6.0X50	1	1	1	1				
31	1	22351-080040	PIN, SPRING 8.0X40	2	2	2	2				
32	1	26013-100202	BOLT, M10X 20	2	2	2	2				
33	1	26013-100252	BOLT, M10X 25	2	2	2	2				
34	1	26013-100252	BOLT, M10X 25	2	2	2	2				
35	1	26716-080002	NUT, M8	2	2	2	2				
36	1	26716-080002	NUT, M8	1	1	1	1				
37	1	26716-100002	NUT, M10	2	2	2	2				
38	1	26736-100002	NUT, M10	1	1	1	1				
39	1	26736-100002	NUT, M10	2	2	2	2				
40	1	1C6410-52690	COLLAR, 11X14X27	1	1	1	1				
41	1	26116-100454	BOLT, M10X 45 PLATED	1	1	1	1				
42	1	22242-000250	RING, 25	1	1	1	1				
43	1	26013-100352	BOLT, M10X 35	2	2	2	2				
44	1	172527-42010	CONNECTOR	1	1	1	1				
45	1	172527-42020	NUT	1	1	1	1				
46	1	172527-42030	SPRING, 415X19.5X32	1	1	1	1				
47	1	1A6210-16150	BALL, LINK BL10D	1	1	1	1				
48	1	1A6210-16160	BALL, LINK BL10DL	1	1	1	1				
49	1	172527-42190	PIN, 10X22	2	2	2	2				
50	1	172527-42200	JOINT	1	1	1	1				
51	1	172527-42671	SHAFT, 25X566	1	1	1	1				
52	1	1E4760-43090	BALL RBL8,LINK	1	1	1	1				
53	1	1E6740-64200	BALL, LINK	1	1	1	1				
54	1	22372-100000	PIN, SNAP 10	2	2	2	2				
55	1	22372-100000	PIN, SNAP 10	1	1	1	1				

N:Old $\frac{\text{Yes}}{\text{No}}$ New, Q:Old $\frac{\text{No}}{\text{Yes}}$ New, R:Old $\frac{\text{Yes}}{\text{Yes}}$ New, S:Old $\frac{\text{No}}{\text{No}}$ New, W:Add, Z:Discontinued, F:Interchangeable by set, K:Q'ty Change

Copyright (C) YANMAR CO., LTD. All RightsReserved.

Fig.28. PARK BRAKE LEVER

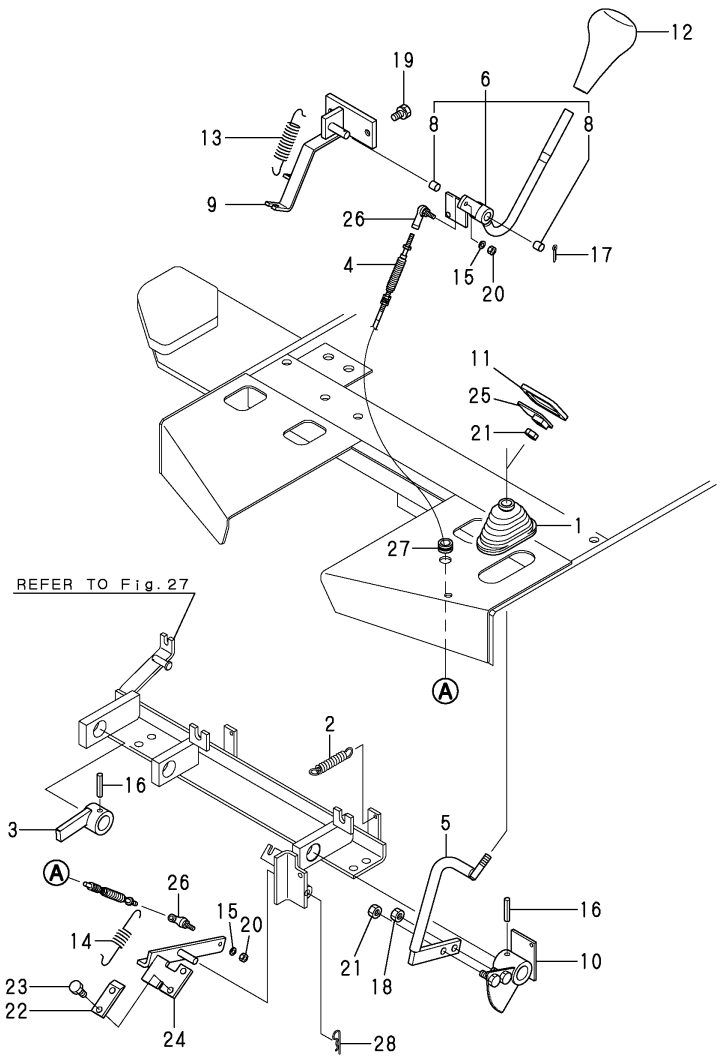

(A)=V3-5A (D)=V5-B
(B)=V3-5B (E)=
(C)=V4-5B (F)=

No.	Lev.	Parts No.	Description	Q'ty (A)	(B)	(C)	(D)	(E)	(F)	I	R
1	1	172141-41340	BOOT	1	1	1	1				
2	1	172524-42190	SPRING, RETURN	1	1	1	1				
3	1	172527-42250	CAM, PARKING	1	1	1	1				
4	1	172527-42320	WIRE	1	1	1	1				
5	1	172527-42350	LEVER, PEDAL	1	1	1	1				
6	1	172530-42800	LEVER, PARKING	1	1	1	1				
8	2	24550-012120	BUSH, 12X12	2	2	2	2				
9	1	172527-42860	HOLDER,CAM	1	1	1	1				
10	1	172527-42962	CAM, RATCHET	1	1	1	1				
11	1	172122-45830	PAD, METAL	1	1	1	1				
12	1	1C6560-47000	GRIP, LEVER	1	1	1	1				
13	1	1C6710-83170	SPRING, TENSION	1	1	1	1				
14	1	172527-42391	SPRING, 1.4X12X61.5	1	1	1	1				
15	1	22217-060000	WASHER, SPRING 6	2	2	2	2				
16	1	22351-080050	PIN, SPRING 8.0X50	2	2	2	2				
17	1	22411-250200	COTTER PIN 2.5X20	1	1	1	1				
18	1	26716-100002	NUT, M10	1	1	1	1				
19	1	26013-100202	BOLT, M10X 20	2	2	2	2				
20	1	26716-060002	NUT, M6	2	2	2	2				
21	1	26716-100002	NUT, M10	2	2	2	2				
22	1	172527-43390	PLATE	1	1	1	1				
23	1	26013-080202	BOLT, M8X 20	2	2	2	2				
24	1	172527-42283	PEDAL LOCK ASSY	1	1	1	1				
25	1	172527-42921	PEDAL, HEAD	1	1	1	1				
26	1	172446-45820	LINK BALL 6	2	2	2	2				
27	1	172162-61850	GROMMET	1	1	1	1				
28	1	22372-100000	PIN, SNAP 10	1	1	1	1				

N:Old $\xleftarrow[\text{No}]{\text{Yes}}$ New, Q:Old $\xleftarrow[\text{Yes}]{\text{No}}$ New, R:Old $\xleftarrow[\text{Yes}]{\text{Yes}}$ New, S:Old $\xleftarrow[\text{No}]{\text{No}}$ New, W:Add, Z:Discontinued, F:Interchangeable by set, K:Q'ty Change

Copyright (C) YANMAR CO., LTD. All RightsReserved.

Fig.29. HYD.OIL CONTROL LEVER

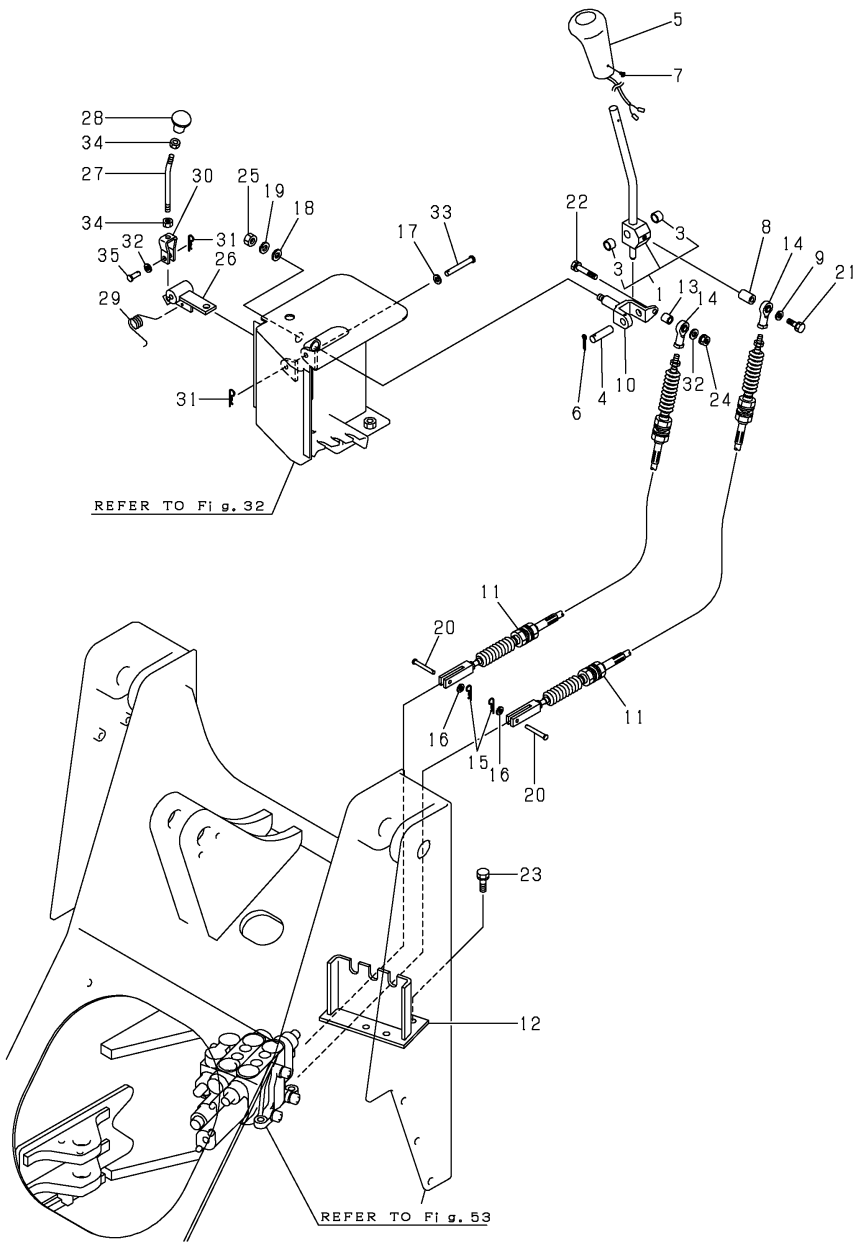

(A)=V3-5A (D)=V5-B
(B)=V3-5B (E)=
(C)=V4-5B (F)=

No.	Lev.	Parts No.	Description	Q'ty (A)	(B)	(C)	(D)	(E)	(F)	I	R
1	1	172527-45101	LEVER ASSY, LOADER	1	1	1	1				
3	2	24550-012120	BUSH, 12X12	2	2	2	2				
4	1	172512-45160	PIN	1	1	1	1				
5	1	172165-47871	KNOB ASSY	1	1	1	1				1
6	1	22417-250320	PIN, COTTER 2.5X32	1	1	1	1				
7	1	26587-040062	SCREW, M4X 6	1	1	1	1				
8	1	1C6650-44090	COLLAR, 8X12X10	1	1	1	1				
9	1	172524-45190	COLLAR, 8X12X2	1	1	1	1				
10	1	172512-45201	LINK, LEVER	1	1	1	1				
11	1	172527-45210	CABLE, LOADER LINK	2	2						
11A	1	172528-45210	CABLE, LOADER LINK			2	2				
12	1	172527-45221	STAY, CABLE	1	1	1	1				
13	1	172524-45250	SPACER	1	1	1	1				
14	1	172122-46571	END, ROD	2	2	2	2				
15	1	1C6281-52310	PIN, SNAP 6	2	2	2	2				
16	1	22137-060000	WASHER, 6	3	3	3	3				
17	1	22137-080000	WASHER, 8	1	1	1	1				
18	1	22137-100000	WASHER, 10	1	1	1	1				
19	1	22217-100000	WASHER, SPRING 10	1	1	1	1				
20	1	22486-060180	PIN, H 6X 18	2	2	2	2				
21	1	26013-080352	BOLT, M8X 35	1	1	1	1				
22	1	26013-080452	BOLT, M8X 45	1	1	1	1				
23	1	26013-100252	BOLT, M10X 25	4	4	4	4				
24	1	26716-080002	NUT, M8	1	1	1	1				
25	1	26716-100002	NUT, M10	1	1	1	1				
26	1	172524-45511	LEVER ASSY, CAM LOCK	1	1	1	1				
27	1	172524-45550	ROD,LOCK LEVER	1	1	1	1				
28	1	172524-45560	KNOB	1	1	1	1				
29	1	172524-45580	SPRING	1	1	1	1				
30	1	172527-45580	JOINT ASSY	1	1	1	1				
31	1	1C6281-52320	PIN, SNAP 8	2	2	2	2				
32	1	22137-080000	WASHER, 8	2	2	2	2				
33	1	22487-080600	PIN 8X 60	1	1	1	1				
34	1	26716-080002	NUT, M8	2	2	2	2				
35	1	933171-21700	PIN (B), SPOOL LINK	1	1	1	1				

Remarks
(1)A KNOB WITH A BUILT-IN
HORN SWITCH.

N:Old $\frac{\text{Yes}}{\text{No}}$ New, Q:Old $\frac{\text{No}}{\text{Yes}}$ New, R:Old $\frac{\text{Yes}}{\text{Yes}}$ New, S:Old $\frac{\text{No}}{\text{No}}$ New, W:Add, Z:Discontinued, F:Interchangeable by set, K:Q'ty Change

Copyright (C) YANMAR CO., LTD. All RightsReserved.

Fig.30. 3RD VALVE CONTROL

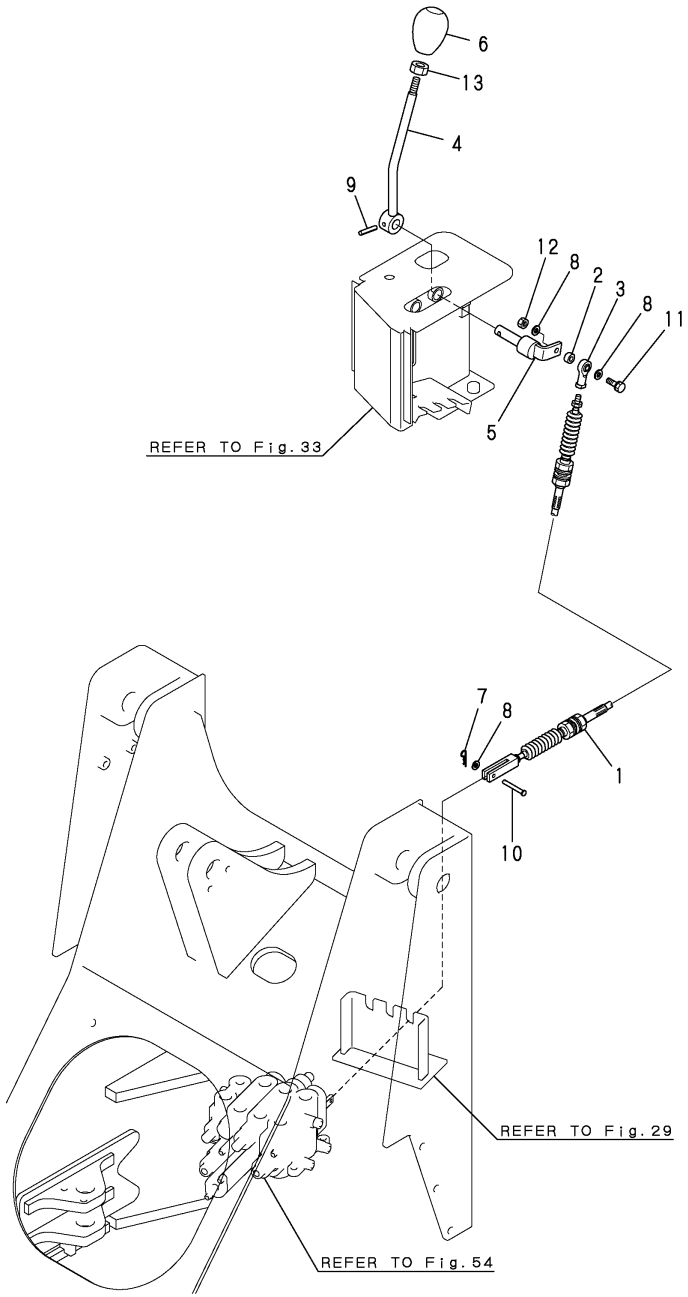

(A)=V3-5A (D)=V5-B
(B)=V3-5B (E)=
(C)=V4-5B (F)=

No.	Lev.	Parts No.	Description	Q'ty (A)	(B)	(C)	(D)	(E)	(F)	I	R
1	1	172527-45210	CABLE, LOADER LINK	1	1						
1A	1	172528-45210	CABLE, LOADER LINK			1	1				
2	1	172524-45250	SPACER	1	1	1	1				
3	1	172122-46571	END, ROD	1	1	1	1				
4	1	172527-46110	LEVER ASSY, 3RD	1	1	1	1				
5	1	172527-46140	PIN, LEVER ASSY	1	1	1	1				
6	1	172312-46321	KNOB	1	1	1	1				
7	1	1C6281-52310	PIN, SNAP 6	1	1	1	1				
8	1	22137-080000	WASHER, 8	3	3	3	3				
9	1	22351-060032	PIN, SPRING 6.0X32	1	1	1	1				
10	1	22486-060180	PIN, H 6X 18	1	1	1	1				
11	1	26013-080502	BOLT, M8X 50	1	1	1	1				
12	1	26716-080002	NUT, M8	1	1	1	1				
13	1	26756-100002	NUT, LOCK M10	1	1	1	1				

N:Old $\xleftarrow[\text{No}]{\text{Yes}}$ New, Q:Old $\xleftarrow[\text{Yes}]{\text{No}}$ New, R:Old $\xleftarrow[\text{Yes}]{\text{Yes}}$ New, S:Old $\xleftarrow[\text{No}]{\text{No}}$ New, W:Add, Z:Discontinued, F:Interchangeable by set, K:Q'ty Change

Copyright (C) YANMAR CO., LTD. All RightsReserved.

Fig.31. STEERING WHEEL & COLUMN

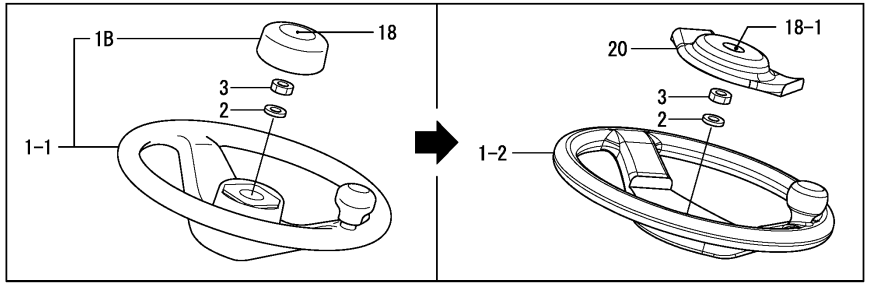

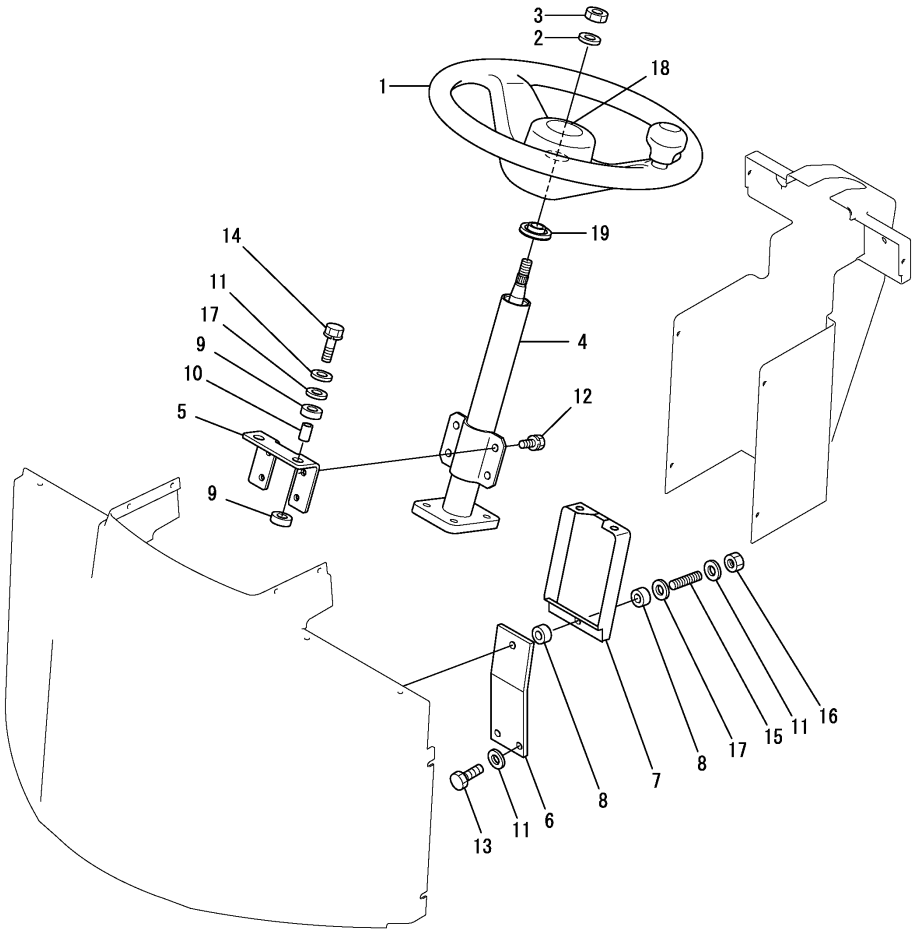

(A)=V3-5A (D)=V5-B
(B)=V3-5B (E)=
(C)=V4-5B (F)=

No.	Lev.	Parts No.	Description	Q'ty (A)	(B)	(C)	(D)	(E)	(F)	I	R
1	1	172527-47600	HANDLE ASSY, STEER.	1	1	1	1				
1-1	1	172527-47601	HANDLE ASSY, STEER.	1	1	1	1				R
	(A=M/#54082)	(B=M/#54082)	(C=M/#53260) (D=M/#03064)								
1-2	1	172538-47600	HANDLE,STEERING	1	1	1	1				N
	(A=*2009.01.)	(B=*2009.01.)	(C=*2009.01.) (D=*2009.01.)								
1B	2	172527-47620	COVER, HORN	1	1	1	1				W
	(A=M/#54082)	(B=M/#54082)	(C=M/#53260) (D=M/#03064)								
1B-1	2	172527-47620	COVER, HORN	1	1	1	1				Z
	(A=*2009.01.)	(B=*2009.01.)	(C=*2009.01.) (D=*2009.01.)								
1C	2	172538-47630	KNOB ASSY	1	1	1	1				W
	(A=*2010.11.)	(B=*2010.11.)	(C=*2010.11.) (D=*2010.11.)								
2	1	22137-140000	WASHER, 14	1	1	1	1				
3	1	26776-140002	NUT, LOCK M14	1	1	1	1				
4	1	172527-47810	COLUMN ASSY	1	1	1	1				
5	1	172527-47910	HOLDER, COLUMN	1	1	1	1				
6	1	172527-47920	SUPPORT	1	1	1	1				
7	1	172524-47931	HOLDER, ST	1	1	1	1				
8	1	172524-47980	RUBBER	2	2	2	2				
9	1	172527-47980	RUBBER	4	4	4	4				
10	1	172527-47990	COLLAR, 11X17X25.5	2	2	2	2				
11	1	22137-100000	WASHER, 10	5	5	5	5				
12	1	26013-100202	BOLT, M10X 20	4	4	4	4				
13	1	26013-100302	BOLT, M10X 30	2	2	2	2				
14	1	26013-100502	BOLT, M10X 50	2	2	2	2				
15	1	26216-100402	STUD, M10X 40	1	1	1	1				
16	1	26716-100002	NUT, M10	1	1	1	1				
17	1	933147-03400	WASHER, BRAKE ARM	3	3	3	3				
18	1	172527-47630	SEAL, HORN	1	1	1	1				
18-1	1	172537-03100	LABEL	1	1	1	1				S
	(A=*2009.01.)	(B=*2009.01.)	(C=*2009.01.) (D=*2009.01.)								
19	1	172527-47880	CAP, COLUMN	1	1	1	1				
20	1	172538-47610	CAP, HANDLE	1	1	1	1				W
	(A=*2009.03.)	(B=*2009.03.)	(C=*2009.03.) (D=*2009.03.)								

N:Old $\overset{\text{Yes}}{\underset{\text{No}}{\leftrightarrow}}$ New, Q:Old $\overset{\text{No}}{\underset{\text{Yes}}{\leftrightarrow}}$ New, R:Old $\overset{\text{Yes}}{\underset{\text{Yes}}{\leftrightarrow}}$ New, S:Old $\overset{\text{No}}{\underset{\text{No}}{\leftrightarrow}}$ New, W:Add, Z:Discontinued, F:Interchangeable by set, K:Q'ty Change

Copyright (C) YANMAR CO., LTD. All RightsReserved.

Fig.32. CONTROL COVER

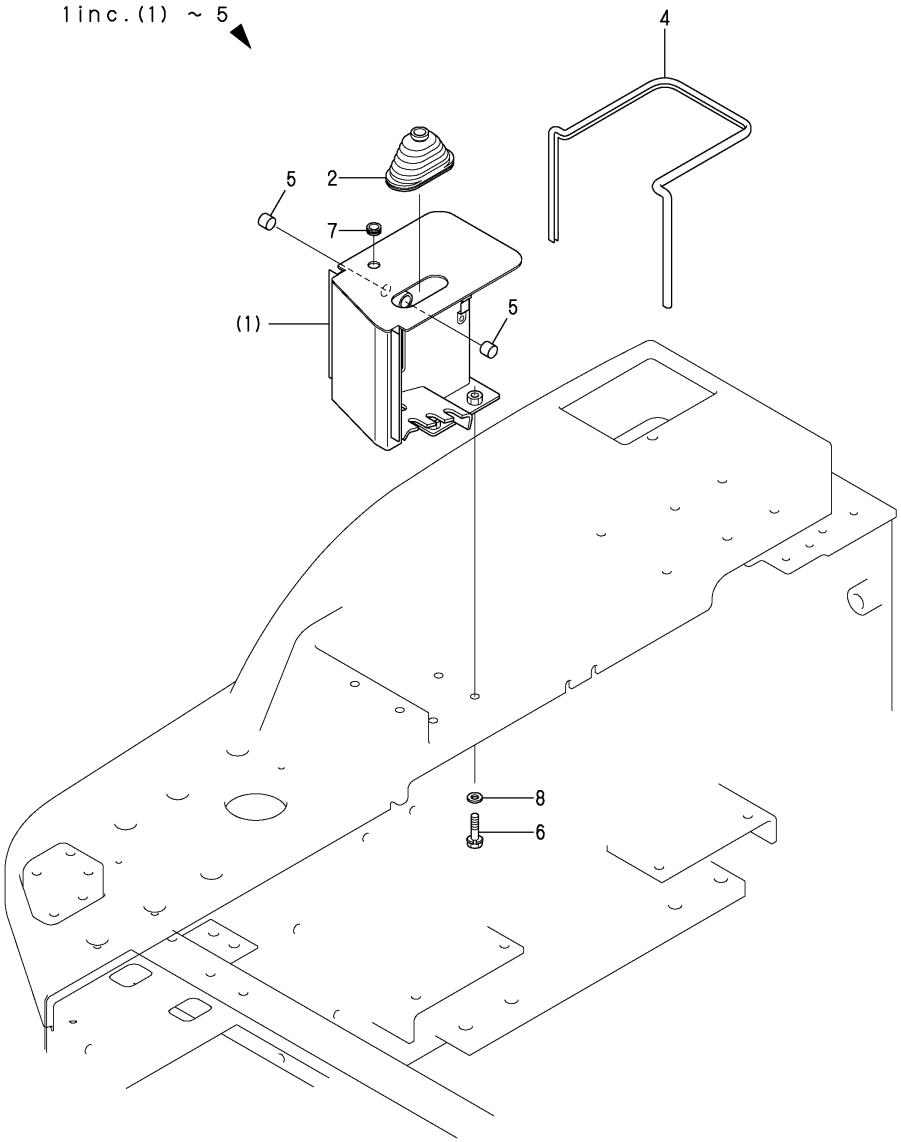

(A)=V3-5A (D)=V5-B
(B)=V3-5B (E)=
(C)=V4-5B (F)=

No.	Lev.	Parts No.	Description	Q'ty (A)	(B)	(C)	(D)	(E)	(F)	I	R
1	1	172527-49500	STAY ASSY, LEVER	1	1	1	1				
2	2	172141-41340	BOOT	1	1	1	1				
4	2	172458-61660	RUBBER, SEAL 930	1	1	1	1				
5	2	24550-016150	BUSH, 16X15	2	2	2	2				
6	1	26013-100352	BOLT, M10X 35	6	6	6	6				
7	1	172162-61850	GROMMET	1	1	1	1				
8	1	194145-04810	WASHER	6	6	6	6				

N:Old $\frac{\text{Yes}}{\text{No}}$ New, Q:Old $\frac{\text{No}}{\text{Yes}}$ New, R:Old $\frac{\text{Yes}}{\text{Yes}}$ New, S:Old $\frac{\text{No}}{\text{No}}$ New, W:Add, Z:Discontinued, F:Interchangeable by set, K:Q'ty Change

Copyright (C) YANMAR CO., LTD. All RightsReserved.

Fig.33. CONTROL COVER(3RD)

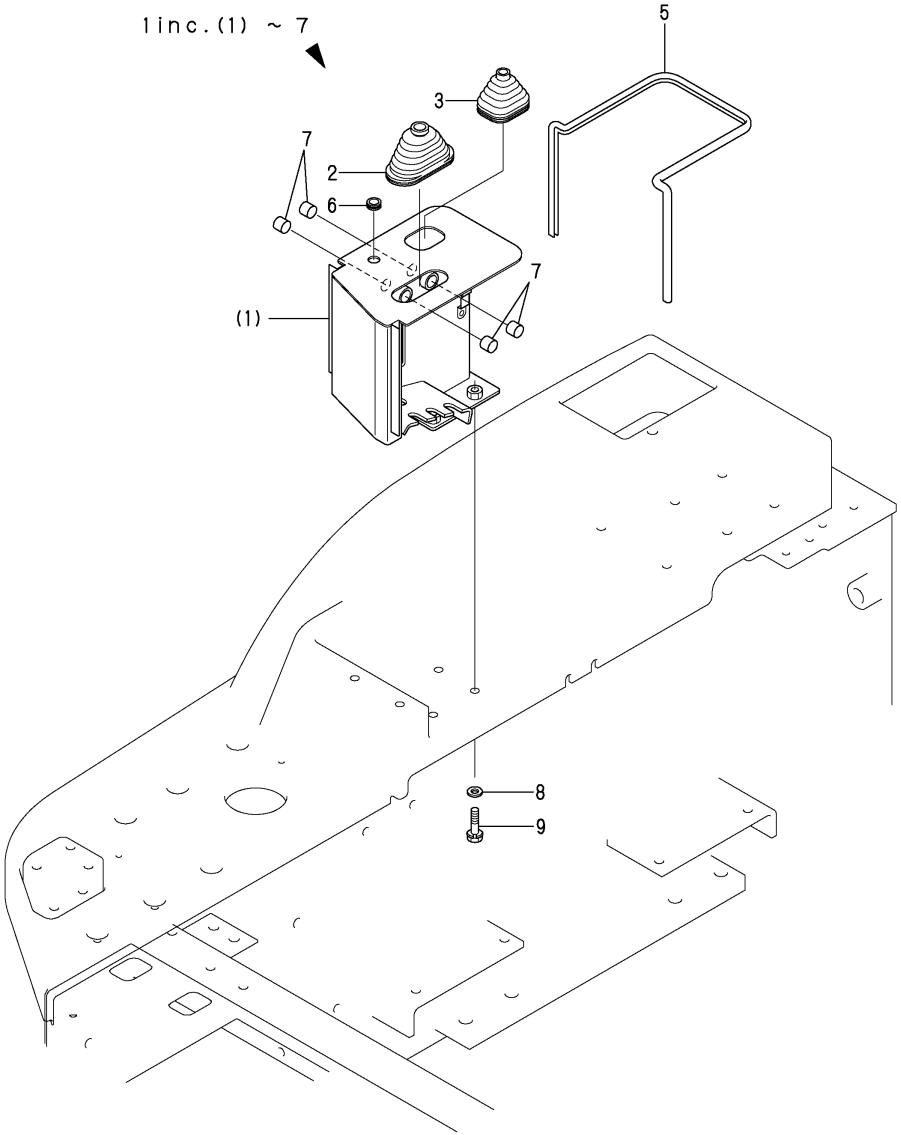

(A)=V3-5A (D)=V5-B
(B)=V3-5B (E)=
(C)=V4-5B (F)=

No.	Lev.	Parts No.	Description	Q'ty (A)	(B)	(C)	(D)	(E)	(F)	I	R
1	1	172527-49600	STAY ASSY, LEVER	1	1	1	1				
2	2	172141-41340	BOOT	1	1	1	1				
3	2	172520-46150	BOOT	1	1	1	1				
5	2	172458-61660	RUBBER, SEAL 930	1	1	1	1				
6	2	172162-61850	GROMMET	1	1	1	1				
7	2	24550-016150	BUSH, 16X15	4	4	4	4				
8	1	194145-04810	WASHER	6	6	6	6				
9	1	26013-100352	BOLT, M10X 35	6	6	6	6				

N:Old $\overset{\text{Yes}}{\underset{\text{No}}{\leftrightarrow}}$ New, Q:Old $\overset{\text{No}}{\underset{\text{Yes}}{\leftrightarrow}}$ New, R:Old $\overset{\text{Yes}}{\underset{\text{Yes}}{\leftrightarrow}}$ New, S:Old $\overset{\text{No}}{\underset{\text{No}}{\leftrightarrow}}$ New, W:Add, Z:Discontinued, F:Interchangeable by set, K:Q'ty Change

Copyright (C) YANMAR CO., LTD. All RightsReserved.

Fig.34. FRONT FRAME

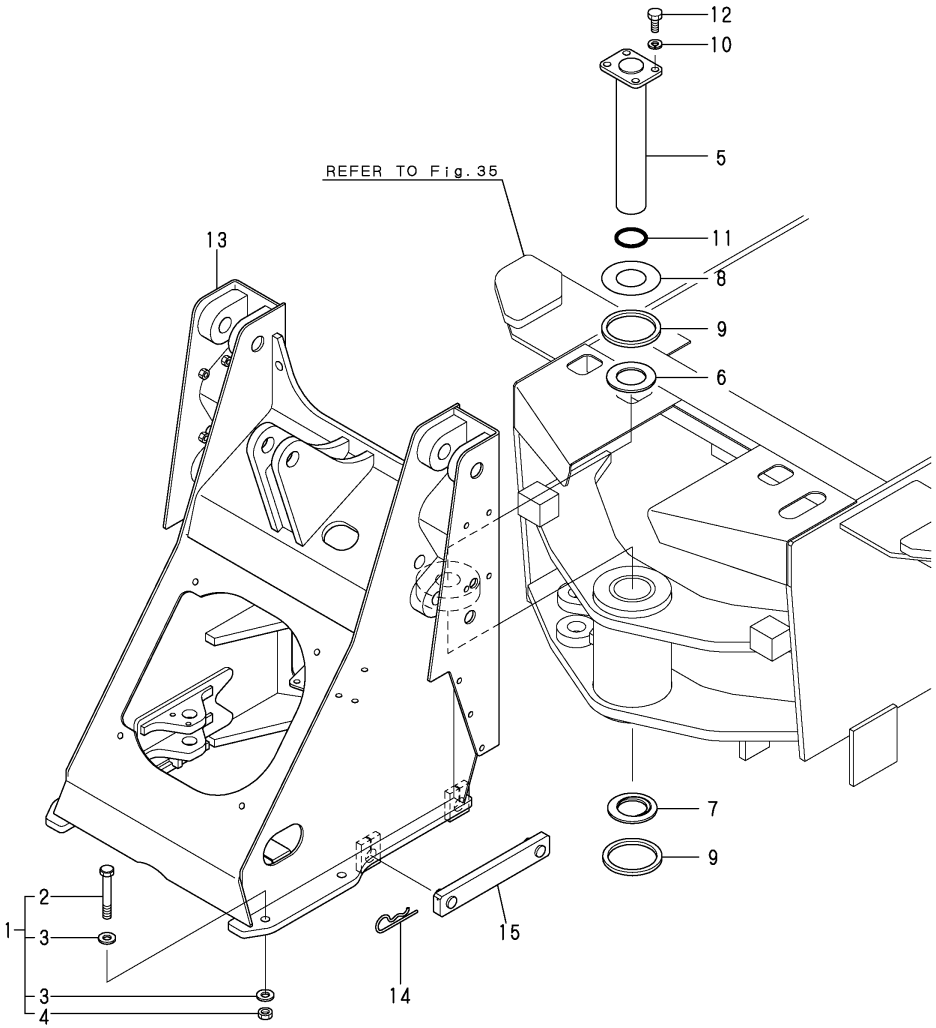

(A)=V3-5A (D)=V5-B
(B)=V3-5B (E)=
(C)=V4-5B (F)=

No.	Lev.	Parts No.	Description	Q'ty (A)	(B)	(C)	(D)	(E)	(F)	I	R
1	1	172527-52411	BOLT F SET	4	4	4	4				
2	2	172527-52421	BOLT 16X110	4	4	4	4				
3	2	172527-52431	WASHER 17X35X4.5	8	8	8	8				
4	2	172527-52451	NUT, M16	4	4	4	4				
5	1	172527-52800	PIN 60X346.5	1	1						
5A	1	172528-52800	PIN 60X357.5			1	1				
6	1	172524-52830	COLLAR, THRUST	1	1	1	1				
7	1	172524-52840	PLATE,THRUST	1	1	1	1				
8	1	172524-52850	SHIM	1	1	1	1				
9	1	172524-52870	GASKET	2	2	2	2				
10	1	22217-140000	WASHER, SPRING 14	4	4	4	4				
11	1	24321-000600	O-RING, 1AG60.0	1	1	1	1				
12	1	26116-140352	BOLT, M14X 35 PLATED	4	4	4	4				
13	1	172527-52101	FRAME ASSY, FRONT	1	1						
13A	1	172528-52101	FRAME ASSY, FRONT			1	1				
14	1	194080-75790	PIN, SNAP 28	2	2	2	2				
15	1	172527-52881	STOPPER ASSY, FRAME	1	1	1	1				

N:Old $\frac{\text{Yes}}{\text{No}}$ New, Q:Old $\frac{\text{No}}{\text{Yes}}$ New, R:Old $\frac{\text{Yes}}{\text{Yes}}$ New, S:Old $\frac{\text{No}}{\text{No}}$ New, W:Add, Z:Discontinued, F:Interchangeable by set, K:Q'ty Change

Copyright (C) YANMAR CO., LTD. All RightsReserved.

Fig.35. REAR FRAME

P/C NEWS No:Y00K3961-4
PUBLISHED:2007/8

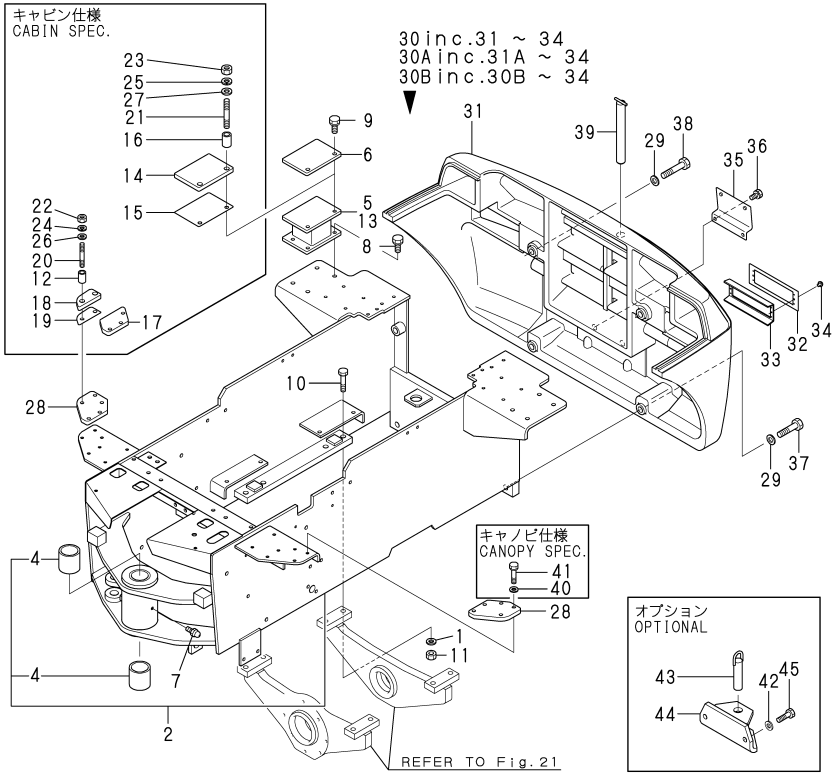

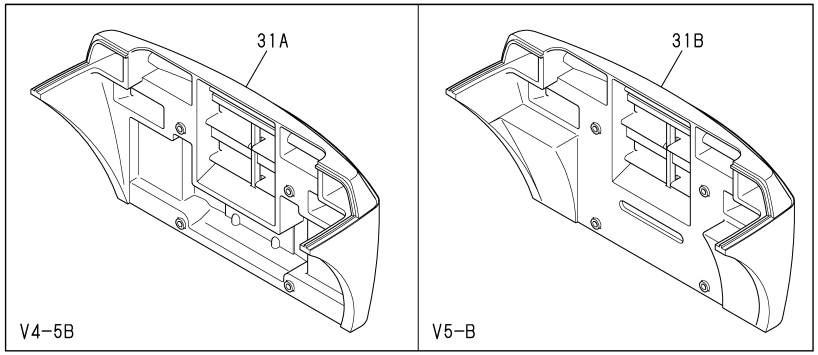

(A)=V3-5A (D)=V5-B
(B)=V3-5B (E)=
(C)=V4-5B (F)=

No.	Lev.	Parts No.	Description	Q'ty (A)	(B)	(C)	(D)	(E)	(F)	I	R
1	1	172527-52431	WASHER 17X35X4.5	8	8	8	8				
2	1	172527-52070	FRAME ASSY, REAR	1	1						
2-1	1	172527-52070-1	FRAME ASSY, REAR		1					S	
		(B=M/#53661)									
2A	1	172528-52070	FRAME ASSY, REAR			1	1				
4	2	172524-33521	BUSH	2	2	2	2				
5	1	172527-54510	BASE,CANOPY	2	2	2	2				
6	1	172527-54710	PLATE	2	2	2	2				
7	1	24764-020000	NIPPLE, GREASE R1/8	1	1	1	1				
8	1	26013-120302	BOLT, M12X 30	8	8	8	8				
9	1	26013-120302	BOLT, M12X 30	4	4	4	4				
10	1	172527-52920	BOLT 16X75	8	8	8	8				
11	1	172527-52451	NUT, M16	8	8	8	8				
12	1	172527-54890	COLLAR, 11X17X32.5	4	4	4	4				2
13	1	172527-54810	BASE,CABIN	2	2	2	2				2
14	1	172527-54850	RUBBER	2	2	2	2				2
15	1	172527-54870	SHIM, 3.2 R	2	2	2	2				2
16	1	172527-54880	COLLAR, 12X17X28.5	4	4	4	4				2
17	1	172527-54930	PLATE	2	2	2	2				2
18	1	172527-54950	RUBBER	2	2	2	2				2
19	1	172527-54970	SHIM, 3.2 F	2	2	2	2				2
20	1	26216-100502	STUD, M10X 50	4	4	4	4				2
21	1	26216-120502	STUD, M12X 50	4	4	4	4				2
22	1	26716-100002	NUT, M10	4	4	4	4				2
23	1	26716-120002	NUT, M12	4	4	4	4				2
24	1	22217-100000	WASHER, SPRING 10	4	4	4	4				2
25	1	22217-120000	WASHER, SPRING 12	4	4	4	4				2
26	1	22137-100000	WASHER, 10	4	4	4	4				2
27	1	22137-120000	WASHER, 12	4	4	4	4				2
28	1	172527-54230	PLATE	2	2	2	2				
29	1	172520-31210	WASHER	4	4	4	4				
30	1	172527-53300	WEIGHT ASSY, COUNTER	1	1						
30-1	1	172527-53300-1	WEIGHT ASSY, COUNTER		1					S	
		(B=M/#53661)									
30A	1	172528-53300	WEIGHT ASSY, COUNTER			1					
30B	1	172529-53300	WEIGHT ASSY, COUNTER				1				
31	2	172527-53310	WEIGHT, COUNTER	1	1						
31-1	2	172527-53310-1	WEIGHT, COUNTER		1					S	
		(B=M/#53661)									
31A	2	172528-53310	WEIGHT, COUNTER			1					
31B	2	172529-53310	WEIGHT ASSY, COUNTER				1				
32	2	172527-53350	PLATE,LAMP	2	2	2	2				
33	2	172527-53361	HOLDER ASSY, LAMP	2	2	2	2				
34	2	22695-320641	RIVET, 3.2X 6.4	8	8	8	8				
35	1	172527-53371	PLATE, NUMBER	1	1	1	1				
35-1	1	172527-53371-1	PLATE, NUMBER		1					S	
		(B=M/#53661)									
36	1	26013-100202	BOLT, M10X 20	2	2	2	2				
37	1	26116-200852	BOLT, M20X 85 PLATED	2	2	2	2				
38	1	26116-201002	BOLT, M20X100 PLATED	2	2	2	2				
39	1	172527-53550	PIN ASSY, HITCH	1	1	1	1				

Remarks
(1)CANOPY SPEC.
(2)CABIN SPEC.
(3)OPTIONAL

N:Old $\overset{\text{Yes}}{\underset{\text{No}}{\leftrightarrow}}$ New, Q:Old $\overset{\text{No}}{\underset{\text{Yes}}{\leftrightarrow}}$ New, R:Old $\overset{\text{Yes}}{\underset{\text{Yes}}{\leftrightarrow}}$ New, S:Old $\overset{\text{No}}{\underset{\text{No}}{\leftrightarrow}}$ New, W:Add, Z:Discontinued, F:Interchangeable by set, K:Q'ty Change

++ CONTINUE ++

Copyright (C) YANMAR CO., LTD. All RightsReserved.

Fig.35. REAR FRAME

(A)=V3-5A (D)=V5-B
(B)=V3-5B (E)=
(C)=V4-5B (F)=

P/C NEWS No:Y00K3961-4
PUBLISHED:2007/8

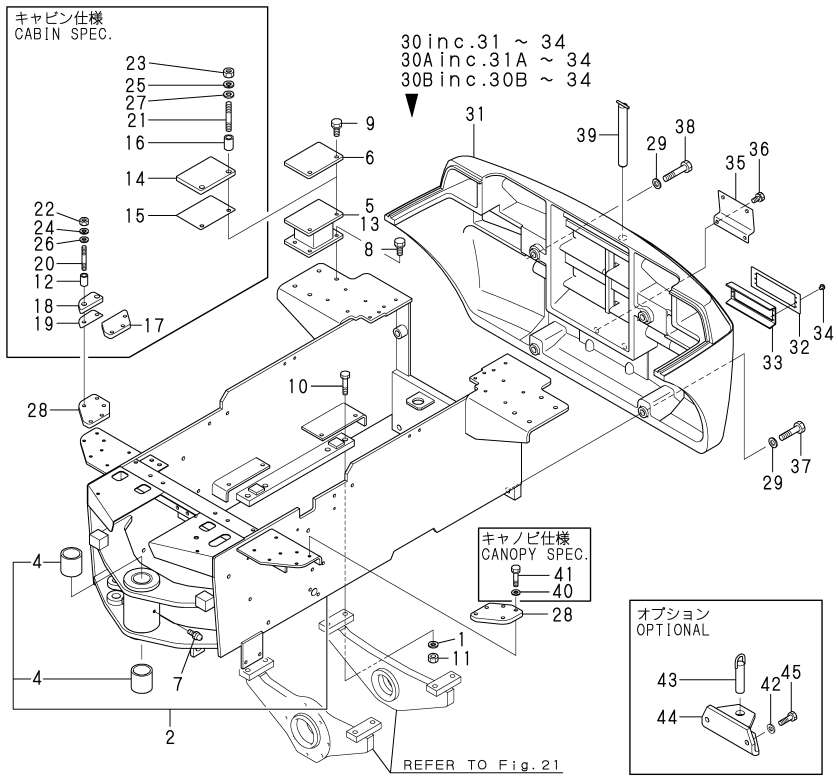

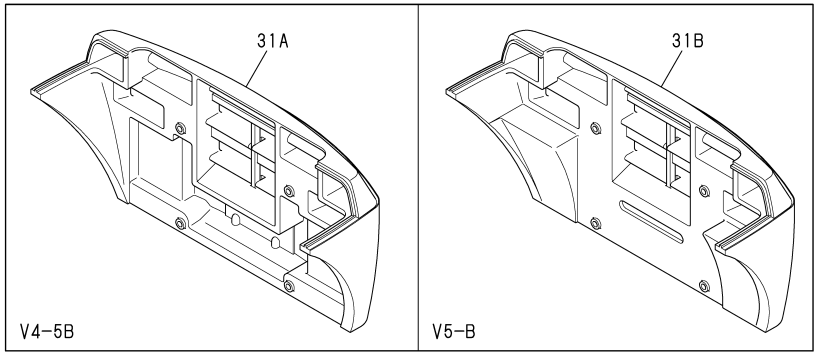

No.	Lev.	Parts No.	Description	Q'ty (A)	(B)	(C)	(D)	(E)	(F)	I	R
40	1	1A1102-51460	WASHER,HANDLE	4	4	4	4				1
41	1	26013-100502	BOLT, M10X 50	4	4	4	4				1
42	1	172527-52431	WASHER 17X35X4.5	2	2	2	2				3
43	1	172527-53610	PIN, HITCH	1	1	1	1				3
44	1	172527-53620	HITCH	1		1	1				3
44A	1	172527-53620-1	HITCH		1						3
45	1	26116-160552	BOLT, M16X 55 PLATED	2	2	2	2				3

Remarks
(1)CANOPY SPEC.
(2)CABIN SPEC.
(3)OPTIONAL

N:Old $\frac{\text{Yes}}{\text{No}}$ New, Q:Old $\frac{\text{No}}{\text{Yes}}$ New, R:Old $\frac{\text{Yes}}{\text{Yes}}$ New, S:Old $\frac{\text{No}}{\text{No}}$ New, W:Add, Z:Discontinued, F:Interchangeable by set, K:Q'ty Change

Copyright (C) YANMAR CO., LTD. All RightsReserved.

Fig.36. OPERATION FRAME & COVER

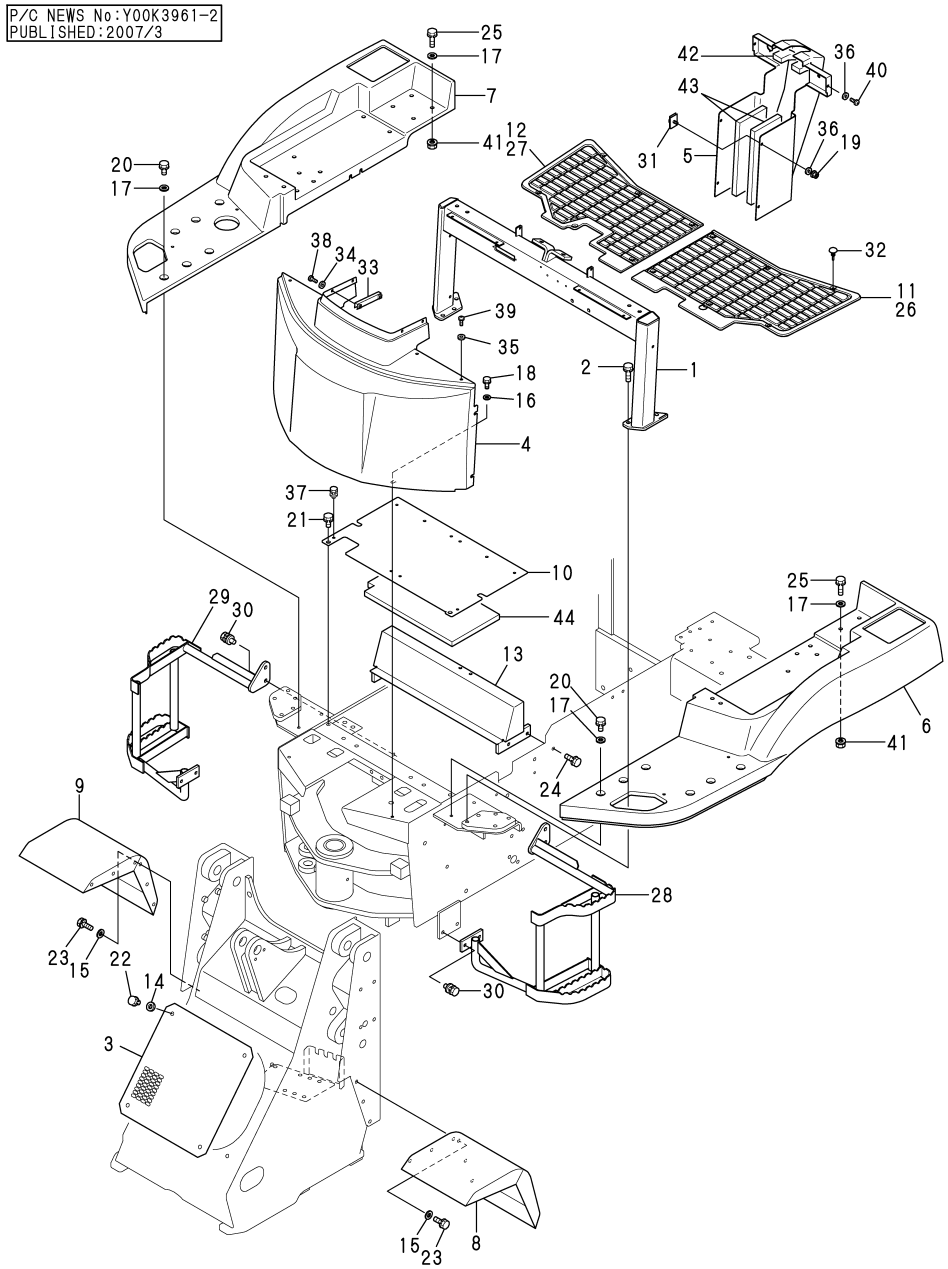

(A)=V3-5A (D)=V5-B
(B)=V3-5B (E)=
(C)=V4-5B (F)=

No.	Lev.	Parts No.	Description	Q'ty (A)	(B)	(C)	(D)	(E)	(F)	I	R
1	1	172527-55510	FRAME ASSY, OPERATOR	1	1	1	1				
1-1	1	172527-55510-3	FRAME ASSY, OPERATOR		1					S	
		(B=M/#53661)									
2	1	26013-100502	BOLT, M10X 50	6	6	6	6				
3	1	172527-61120	COVER	1	1	1	1				
4	1	172527-61210	COVER, OPERATOR	1	1	1	1				
5	1	172527-61410	COVER, COLUMN	1	1	1	1				
6	1	172527-61610	FENDER, REAR	1	1	1	1				
6-1	1	172527-61610-1	FENDER, REAR		1					S	
		(B=M/#53661)									
7	1	172527-61630	FENDER, REAR	1	1	1	1				
7-1	1	172527-61630-1	FENDER, REAR		1					S	
		(B=M/#53661)									
8	1	172527-61710	FENDER	1	1	1	1				
9	1	172527-61720	FENDER	1	1	1	1				
10	1	172527-61810	FLOOR	1	1	1	1				
10-1	1	172527-61810-3	FLOOR		1					S	
		(B=M/#53661)									
11	1	172527-61850	FLOOR MAT L	1	1	1	1				
12	1	172527-61860	FLOOR MAT R	1	1	1	1				
13	1	172527-61540	MEMBER ASSY, CROSS	1	1	1	1				
13-1	1	172527-61540-2	MEMBER ASSY, CROSS		1					S	
		(B=M/#53661)									
14	1	22137-100000	WASHER, 10	4	4	4	4				
15	1	22137-100000	WASHER, 10	6	6	6	6				
16	1	22157-080000	WASHER, 8	6	6	6	6				
17	1	22157-100000	WASHER, 10	20	20	20	20				
18	1	26013-080202	BOLT, M8X 20	6	6	6	6				
19	1	194990-22130	NUT, M6	4	4	4	4				
20	1	26013-100202	BOLT, M10X 20	12	12	12	12				
21	1	26013-100202	BOLT, M10X 20	2	2	2	2				
22	1	26013-100202	BOLT, M10X 20	4	4	4	4				
23	1	26013-100252	BOLT, M10X 25	6	6	6	6				
24	1	26013-100302	BOLT, M10X 30	4	4	4	4				
25	1	26013-100452	BOLT, M10X 45	8	8	8	8				
26	1	172527-61880	FLOOR MAT L CAB	1	1	1	1				1
27	1	172527-61890	FLOOR MAT R CAB	1	1	1	1				1
28	1	172527-62110	STEP	1	1	1	1				
28-1	1	172527-62110-1	STEP		1					S	
		(B=M/#53661)									
29	1	172527-62120	STEP	1	1	1	1				
29-1	1	172527-62120-1	STEP		1					S	
		(B=M/#53661)									
30	1	26014-100302	BOLT, M10X 30	8	8	8	8				
31	1	172527-61421	CLAMP ASSY, COLUMN	4	4	4	4				
32	1	172527-61980	CLIP	12	12	12	12				
33	1	172524-63151	CLAMP ASSY, VISOR	2	2	2	2				
34	1	22157-060000	WASHER, 6	4	4	4	4				
35	1	22157-060000	WASHER, 6	4	4	4	4				
36	1	1A1040-63400	WASHER, 6.4X16X1.6	6	6	6	6				
37	1	26014-060162	BOLT, M6X 16	2	2	2	2				

Remarks
(1)CABIN SPEC.

N:Old $\xleftrightarrow[\text{No}]{\text{Yes}}$ New, Q:Old $\xleftrightarrow[\text{Yes}]{\text{No}}$ New, R:Old $\xleftrightarrow[\text{Yes}]{\text{Yes}}$ New, S:Old $\xleftrightarrow[\text{No}]{\text{No}}$ New, W:Add, Z:Discontinued, F:Interchangeable by set, K:Q'ty Change

++ CONTINUE ++

Copyright (C) YANMAR CO., LTD. All RightsReserved.

Fig.36. OPERATION FRAME & COVER

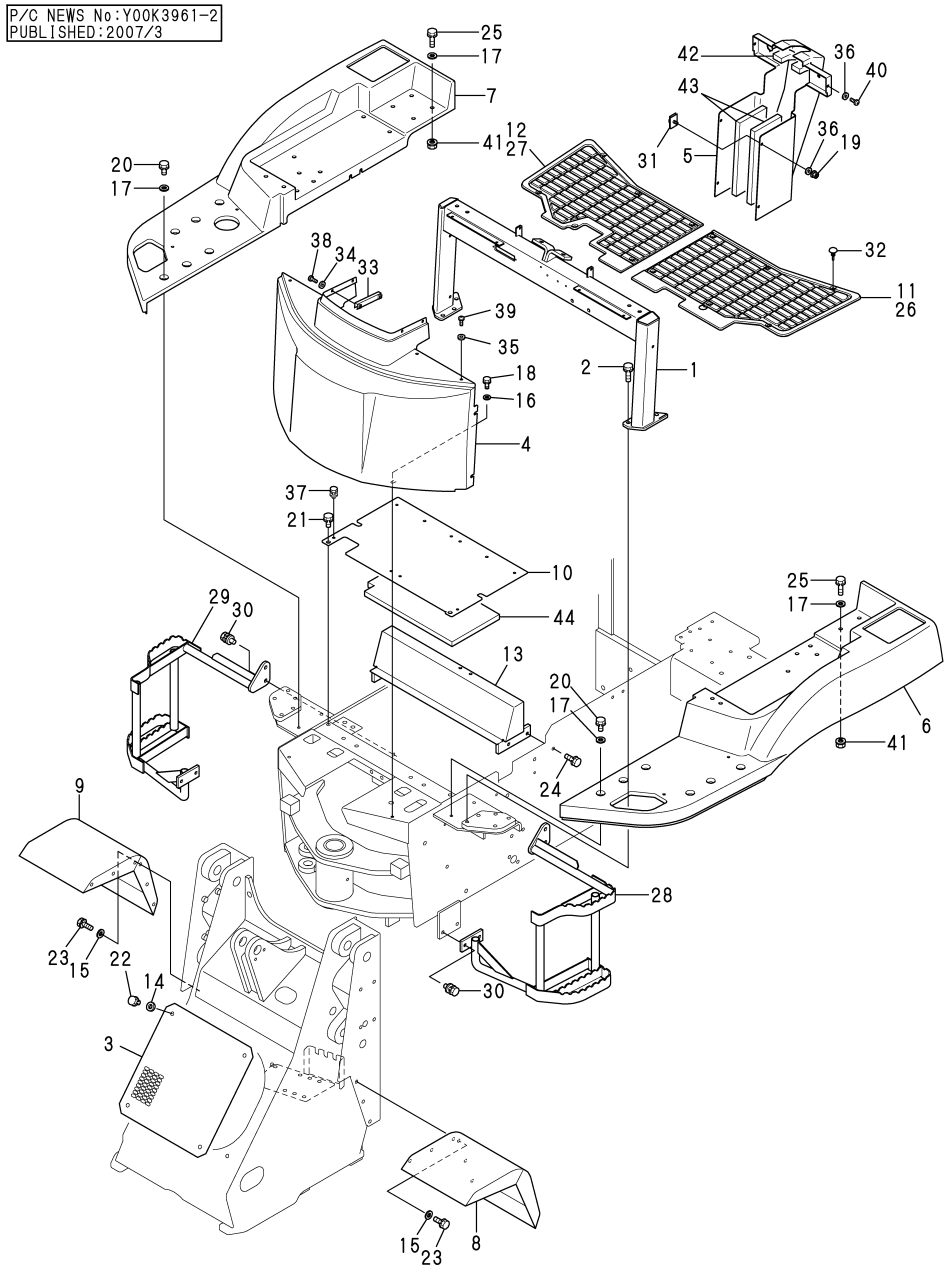

(A)=V3-5A (D)=V5-B
(B)=V3-5B (E)=
(C)=V4-5B (F)=

No.	Lev.	Parts No.	Description	Q'ty (A)	(B)	(C)	(D)	(E)	(F)	I	R
38	1	26022-060162	SCREW, M6X16	4	4	4	4				
39	1	26022-060162	SCREW, M6X16	4	4	4	4				
40	1	26022-060162	SCREW, M6X16	2	2	2	2				
41	1	26366-100002	NUT, M10	8	8	8	8				
42	1	172527-63750	SOUND-PROOF CC-M-20	1	1	1	1				
43	1	172527-63760	SOUND-PROOF CC-S-20	2	2	2	2				
44	1	172527-63770	SOUND-PROOF FLR-20	1	1	1	1				

Remarks
(1)CABIN SPEC.

N:Old $\xleftarrow[\text{No}]{\text{Yes}}$ New, Q:Old $\xleftarrow[\text{Yes}]{\text{No}}$ New, R:Old $\xleftarrow[\text{Yes}]{\text{Yes}}$ New, S:Old $\xleftarrow[\text{No}]{\text{No}}$ New, W:Add, Z:Discontinued, F:Interchangeable by set, K:Q'ty Change

Copyright (C) YANMAR CO., LTD. All RightsReserved.

Fig.37. SEAT & BONNET

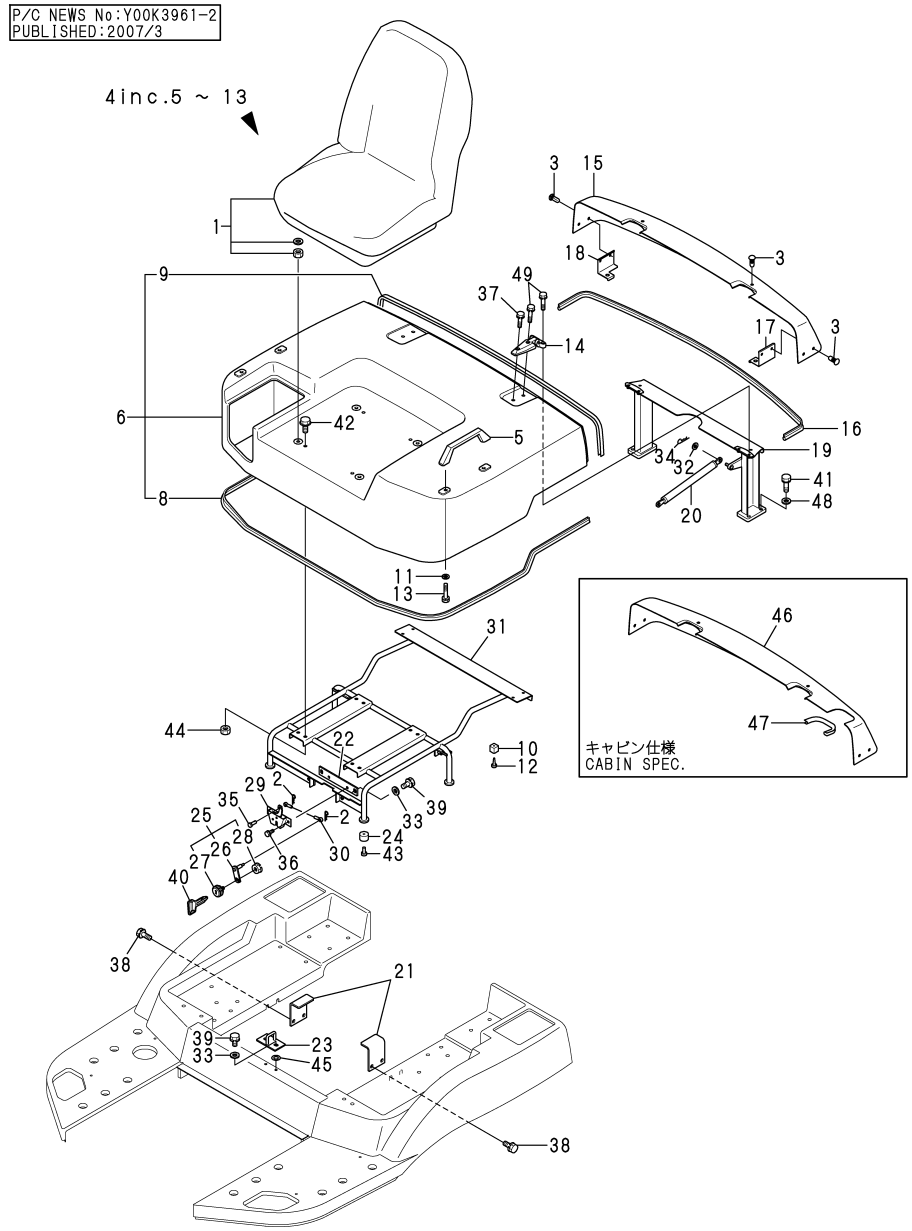

(A)=V3-5A (D)=V5-B
(B)=V3-5B (E)=
(C)=V4-5B (F)=

No.	Lev.	Parts No.	Description	Q'ty (A)	(B)	(C)	(D)	(E)	(F)	I	R
1	1	172527-64200	SEAT ASSY	1	1	1	1				
2	1	1C6281-52310	PIN, SNAP 6	2	2	2	2				
3	1	172527-61990	FASTENER	6	6	6	6				
4	1	172527-65100	BONNET ASSY	1	1	1	1				
5	2	198220-62410	BAR, ASSIST	2	2	2	2				
6	2	172527-65120	BONNET ASSY, W/PAD	1	1	1	1				
8	3	172527-65130	SEAL, BONNET	1	1	1	1				
9	3	172527-65140	SEAL, BONNET	1	1	1	1				
10	2	172524-65140	RUBBER	4	4	4	4				
11	2	22137-080000	WASHER, 8	4	4	4	4				
12	2	22857-500160	SCREW, 5X16	4	4	4	4				
13	2	26013-080302	BOLT, M8X 30	4	4	4	4				
14	1	172520-65151	HINGE	2	2	2	2				
15	1	172527-65150	COVER	1	1	1	1				
16	1	172527-65170	SEAL, COVER	1	1	1	1				
17	1	172527-65181	BRACKET L,REAR COVER	1	1	1	1				
18	1	172527-65191	BRACKET R,REAR COVER	1	1	1	1				
19	1	172527-65211	STAY ASSY, HINGE	1	1	1	1				
19-1	1	172527-65211-1	STAY ASSY, HINGE		1					S	
		(B=M/#53661)									
20	1	172527-65270	SPRING, GAS	1	1	1	1				
21	1	172527-65312	STAY, BONNET	2	2	2	2				
22	1	172527-65351	PLATE ASSY, ROCK	1	1	1	1				
23	1	172527-65361	PLATE ASSY, CATCH	1	1	1	1				
24	1	172524-65670	CUSHION, RUBBER	4	4	4	4				
25	1	172524-65700	KEY ASSY, CYLINDER	1	1	1	1				
26	2	172524-65711	PLATE ASSY, KEY	1	1	1	1				
27	2	172164-66170	KEY ASSY, CYLINDER	1	1	1	1				
28	2	26346-100002	NUT, M10	1	1	1	1				
29	1	172527-65730	ROCK, BONNET	1	1	1	1				
30	1	172527-65750	WIRE, BONNET	1	1	1	1				
31	1	172527-65811	FRAME, BONNET	1	1	1	1				
32	1	22137-080000	WASHER, 8	2	2	2	2				
33	1	22137-100000	WASHER, 10	4	4	4	4				
34	1	22360-080000	SNAP PIN 8	2	2	2	2				
35	1	22487-060160	PIN, H 6X 16	1	1	1	1				
36	1	26013-080162	BOLT, M8X 16	2	2	2	2				
37	1	26014-080302	BOLT, M8X 30	2	2	2	2				
38	1	26013-080352	BOLT, M8X 35	4	4	4	4				
39	1	26013-100252	BOLT, M10X 25	4	4	4	4				
40	1	933110-07101	KEY	1	1	1	1				
41	1	26013-100302	BOLT, M10X 30	4	4	4	4				
42	1	26014-080252	BOLT, M8X 25	4	4	4	4				
43	1	26023-060162	SCREW, M6X16	4	4	4	4				
44	1	26366-080002	NUT, M8	4	4	4	4				
45	1	172527-65370	SHIM	1	1	1	1				1
46	1	172527-65550	COVER	1	1	1	1				2
47	1	172527-65560	TRIM, COVER	1	1	1	1				2
48	1	22137-100000	WASHER, 10	4	4	4	4				
49	1	26014-080352	BOLT, M8X 35	6	6	6	6				

Remarks
(1)SELECT PART.
(2)CABIN SPEC.

N:Old $\overset{\text{Yes}}{\underset{\text{No}}{\leftrightarrow}}$ New, Q:Old $\overset{\text{No}}{\underset{\text{Yes}}{\leftrightarrow}}$ New, R:Old $\overset{\text{Yes}}{\underset{\text{Yes}}{\leftrightarrow}}$ New, S:Old $\overset{\text{No}}{\underset{\text{No}}{\leftrightarrow}}$ New, W:Add, Z:Discontinued, F:Interchangeable by set, K:Q'ty Change

Copyright (C) YANMAR CO., LTD. All RightsReserved.

Fig.38. BONNET SOUNDPROOF MATERIAL

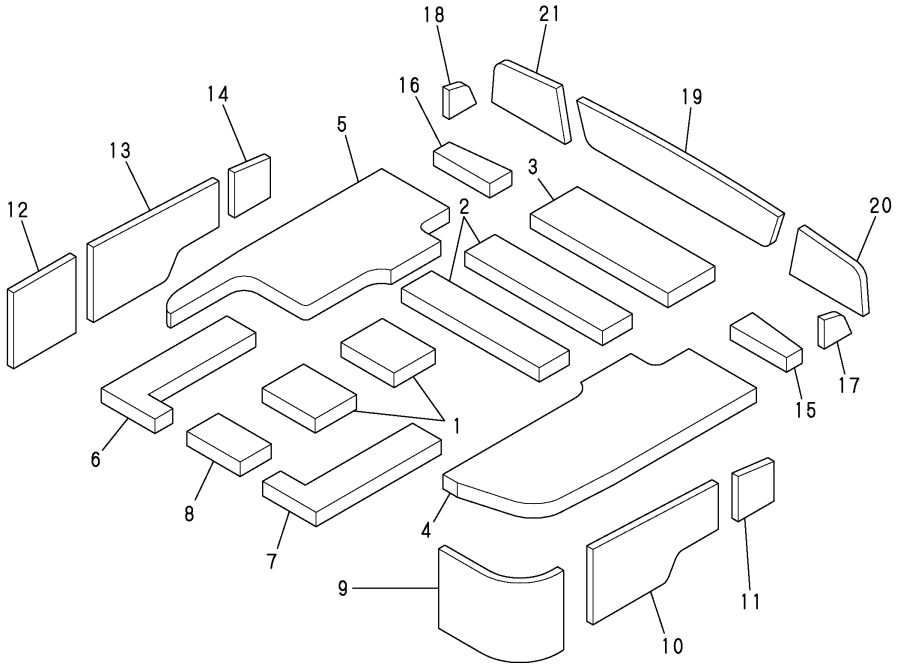

(A)=V3-5A (D)=V5-B
(B)=V3-5B (E)=
(C)=V4-5B (F)=

No.	Lev.	Parts No.	Description	Q'ty (A)	(B)	(C)	(D)	(E)	(F)	I	R
1	1	172527-63510	SOUNDPROOFBNT-UC1-20	2	2	2	2				
2	1	172527-63520	SOUNDPROOFBNT-UC2-40	2	2	2	2				
3	1	172527-63530	SOUNDPROOFBNT-UC3-20	1	1	1	1				
4	1	172527-63540	SOUNDPROOFBNT-UL1-20	1	1	1	1				
5	1	172527-63550	SOUNDPROOFBNT-UR-20	1	1	1	1				
6	1	172527-63560	SOUNDPROOFBNT-UCL-20	1	1	1	1				
7	1	172527-63570	SOUNDPROOFBNT-UCR-20	1	1	1	1				
8	1	172527-63580	SOUNDPROOFBNT-UCF-20	1	1	1	1				
9	1	172527-63590	SOUNDPROOF BNT-LF-20	1	1	1	1				
10	1	172527-63610	SOUNDPROOF BNT-LC-20	1	1	1	1				
11	1	172527-63620	SOUNDPROOF BNT-LR-20	1	1	1	1				
12	1	172527-63630	SOUNDPROOF BNT-RF-20	1	1	1	1				
13	1	172527-63640	SOUNDPROOFBNT-RC-20	1	1	1	1				
14	1	172527-63650	SOUNDPROOFBNT-RR-20	1	1	1	1				
15	1	172527-63660	SOUNDPROOF RC-UL-20	1	1	1	1				
16	1	172527-63670	SOUNDPROOF RC-UR-20	1	1	1	1				
17	1	172527-63680	SOUNDPROOF RC-LS-20	1	1	1	1				
18	1	172527-63690	SOUNDPROOF RC-RS-20	1	1	1	1				
19	1	172527-63710	SOUNDPROOF RC-R-20	1	1	1	1				
20	1	172527-63720	SOUNDPROOF RC-RL-20	1	1	1	1				
21	1	172527-63730	SOUNDPROOF RC-RR-20	1	1	1	1				

N:Old $\overset{\text{Yes}}{\underset{\text{No}}{\leftrightarrows}}$ New, Q:Old $\overset{\text{No}}{\underset{\text{Yes}}{\leftrightarrows}}$ New, R:Old $\overset{\text{Yes}}{\underset{\text{Yes}}{\leftrightarrows}}$ New, S:Old $\overset{\text{No}}{\underset{\text{No}}{\leftrightarrows}}$ New, W:Add, Z:Discontinued, F:Interchangeable by set, K:Q'ty Change

Copyright (C) YANMAR CO., LTD. All RightsReserved.

Fig.39. FRAME SOUNDPROOF MATERIAL

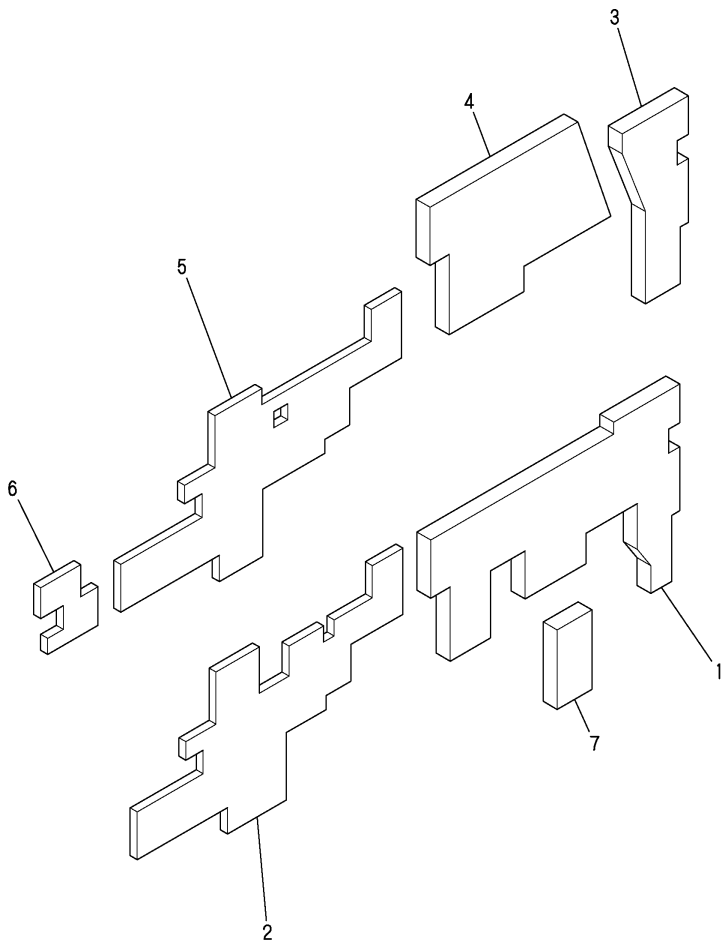

(A)=V3-5A (D)=V5-B
(B)=V3-5B (E)=
(C)=V4-5B (F)=

No.	Lev.	Parts No.	Description	Q'ty (A)	(B)	(C)	(D)	(E)	(F)	I	R
1	1	172527-63910	SOUND-PR00F SF-L(R1)	1	1	1	1				
2	1	172527-63920	SOUND-PR00F SF-L(M)	1	1	1	1				
3	1	172527-63950	SOUND-PR00F SF-R(R)	1	1	1	1				
4	1	172527-63960	SOUND-PR00F SF-R(M)	1	1	1	1				
5	1	172527-63970	SOUND-PR00F SF-R(F2)	1	1	1	1				
6	1	172527-63980	SOUND-PR00F SF-R(F1)	1	1	1	1				
7	1	172527-63990	SOUND-PR00F SF-L(R2)	1	1						

N:Old $\xleftrightarrow[\text{No}]{\text{Yes}}$ New, Q:Old $\xleftrightarrow[\text{Yes}]{\text{No}}$ New, R:Old $\xleftrightarrow[\text{Yes}]{\text{Yes}}$ New, S:Old $\xleftrightarrow[\text{No}]{\text{No}}$ New, W:Add, Z:Discontinued, F:Interchangeable by set, K:Q'ty Change

Copyright (C) YANMAR CO., LTD. All RightsReserved.

Fig.40. CANOPY

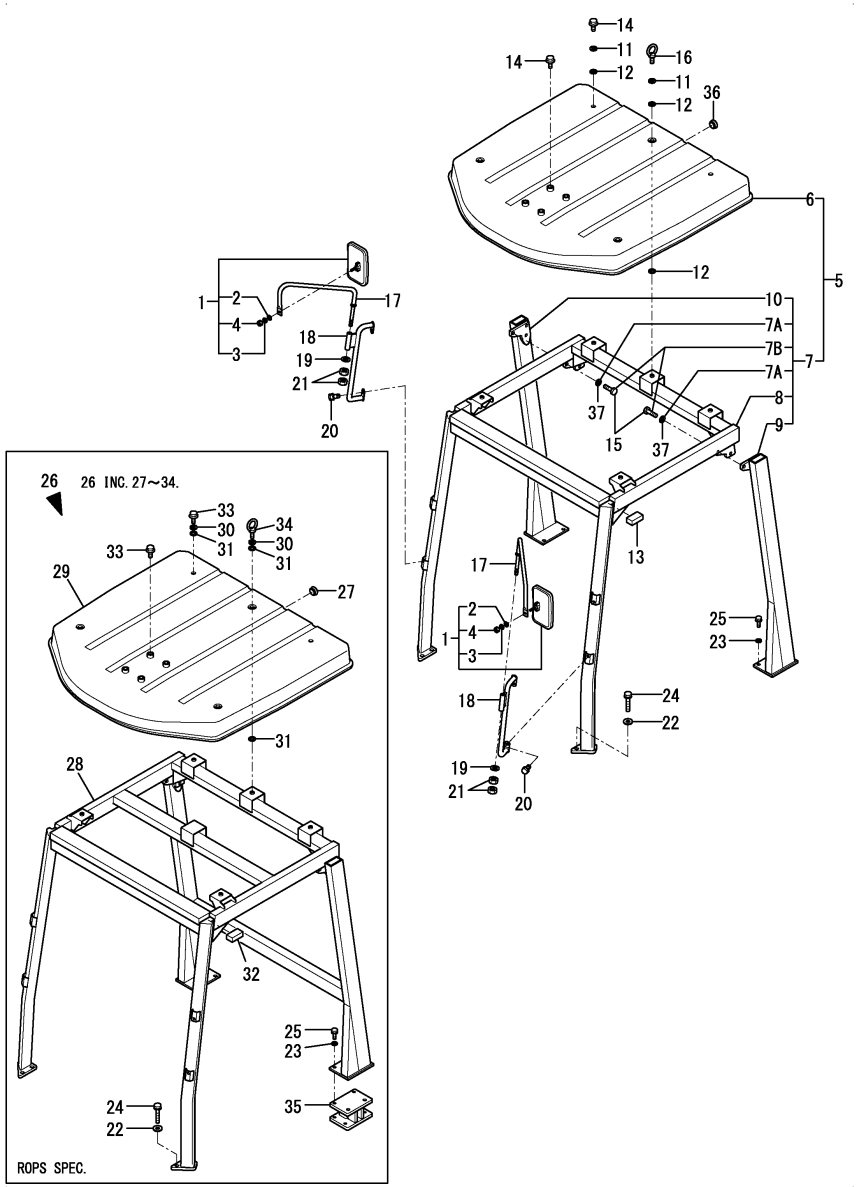

Remarks
* I changed an Ref.No. and a level.
(1)FOR ROPS.
(2)I changed the constitution of the repair parts.

(A)=V3-5A (D)=V5-B
(B)=V3-5B (E)=
(C)=V4-5B (F)=

No.	Lev.	Parts No.	Description	Q'ty (A)	(B)	(C)	(D)	(E)	(F)	I	R
1	1	172524-06900	MIRROR ASSY	2	2	2	2				
2	2	22137-080000	WASHER, 8	2	2	2	2				
3	2	22217-080000	WASHER, SPRING 8	2	2	2	2				
4	2	26716-080002	NUT, M8	2	2	2	2				
5	1	172527-68101	CANOPY ASSY	1							
5-1	1	172527-68102	CANOPY ASSY	1	1	1	1			N	
	(A=M/#53110)										
6	2	172527-68511	ROOF ASSY	1							
6-1	2	172527-68512-1	ROOF ASSY(WARMGRAY)	1	1	1	1			N	
	(A=M/#53110)										
7	2	172533-68100	FRAME ASSY, CANOPY	1	1	1	1			W	2
	(A=*2011.08.)	(B=*2011.08.)	(C=*2011.08.) (D=*2011.08.)								
7A	3	22137-120000	WASHER, 12	6	6	6	6			W	
	(A=*2016.09.)	(B=*2016.09.)	(C=*2016.09.) (D=*2016.09.)								
7B	3	26076-120302	BOLT, 10.912X 30	6	6	6	6			W	
	(A=*2016.09.)	(B=*2016.09.)	(C=*2016.09.) (D=*2016.09.)								
8	3	172527-68111	FRAME ASSY	1							
8-1	3	172527-68112	FRAME ASSY	1	1	1	1			N	
	(A=M/#53110)										
9	3	172527-68530	POLE L	1							
9-1	3	172527-68531	PROP ASSY	1	1	1	1			N	
	(A=M/#53110)										
10	3	172527-68540	POLE R	1							
10-1	3	172527-68541	PROP ASSY	1	1	1	1			N	
	(A=M/#53110)										
11	1	172524-68710	WASHER	5	5	5	5				
12	1	172524-68720	SEAL	10	10	10	10				
13	1	172527-69280	SEAL	2	2	2	2				
14	1	172527-69630	BOLT	6	6	6	6				
14-1	1	26116-080162	BOLT, M8X 16 PLATED	6	6	6	6			R	
	(A=*2005.10.)	(B=*2005.10.)	(C=*2005.10.) (D=*2005.10.)								
15	1	172527-69710	BOLT	6	6	6	6				
15-1	1	26076-120302	BOLT, 10.912X 30	6	6	6	6			R	
	(A=*2005.10.)	(B=*2005.10.)	(C=*2005.10.) (D=*2005.10.)								
15-2	1	26076-120302	BOLT, 10.912X 30	6	6	6	6			Z	
	(A=*2016.09.)	(B=*2016.09.)	(C=*2016.09.) (D=*2016.09.)								
16	1	26617-080002	BOLT, EYE M8	3	3	3	3				
17	1	172527-68671	STAY ASSY, MIRROR	2	2	2	2				
17-1	1	172527-68671-2	STAY ASSY, MIRROR		2					S	
		(B=M/#53661)									
18	1	172524-69411	GRIP ASSY, CABIN	2	2	2	2				
18-1	1	172524-69411-2	GRIP ASSY, CABIN		2					S	
		(B=M/#53661)									
19	1	22137-140000	WASHER, 14	2	2	2	2				
20	1	26013-100202	BOLT, SPRING M10X 20	4	4	4	4				
21	1	26736-140002	NUT, M14	4	4	4	4				
22	1	1A1102-51460	WASHER,HANDLE	4	4	4	4				
23	1	22137-120000	WASHER, 12	2	2	2	2				
24	1	26013-100502	BOLT, SPRING M10X 50	4	4	4	4				
25	1	26013-120302	BOLT, SPRING M12X 30	4	4	4	4				
26	1	172527-67101	CANOPY, ROPS	1						W	1

N:Old $\xleftrightarrow[\text{No}]{\text{Yes}}$ New, Q:Old $\xleftrightarrow[\text{Yes}]{\text{No}}$ New, R:Old $\xleftrightarrow[\text{Yes}]{\text{Yes}}$ New, S:Old $\xleftrightarrow[\text{No}]{\text{No}}$ New, W:Add, Z:Discontinued, F:Interchangeable by set, K:Q'ty Change

++ CONTINUE ++

Copyright (C) YANMAR CO., LTD. All RightsReserved.

Fig.40. CANOPY

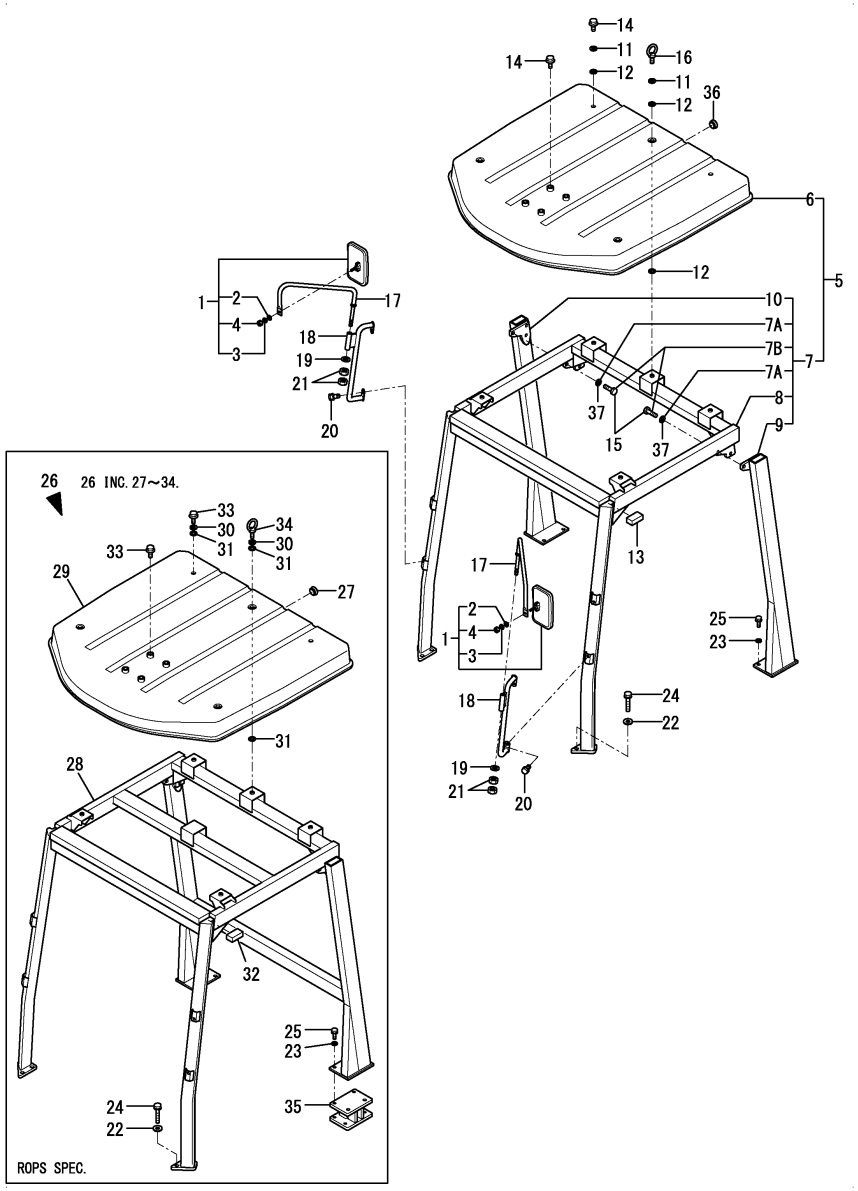

Remarks
* I changed an Ref.No. and a level.
(1)FOR ROPS.
(2)I changed the constitution of the repair parts.

(A)=V3-5A (D)=V5-B
(B)=V3-5B (E)=
(C)=V4-5B (F)=

No.	Lev.	Parts No.	Description	Q'ty (A)	(B)	(C)	(D)	(E)	(F)	I	R
	(A=M/#53110)										
27	2	172527-17830	CAP	1						W	1
	(A=M/#53110)										
28	2	172527-67131	CANOPY, ROPS	1						W	1
	(A=M/#53110)										
29	2	172527-68512	ROOF ASSY(YELLOW:2J)	1						W	1
	(A=M/#53110)										
30	2	172524-68710	WASHER	5						W	1
	(A=M/#53110)										
31	2	172524-68720	SEAL	10						W	1
	(A=M/#53110)										
32	2	172527-69280	SEAL	2						W	1
	(A=M/#53110)										
33	2	172527-69630	BOLT	6						W	1
	(A=M/#53110)										
34	2	26617-080002	BOLT, EYE M8	3						W	1
	(A=M/#53110)										
35	1	172527-67151	BASE ASSY, ROPS	1						W	1
	(A=M/#53110)										
36	1	172527-17830	CAP	1	1	1	1				
37	1	22137-120000	WASHER, 12	6	6	6	6			W	
	(A=*2005.10.)	(B=*2005.10.)	(C=*2005.10.) (D=*2005.10.)								
37-1	1	22137-120000	WASHER, 12	6	6	6	6			Z	
	(A=*2016.09.)	(B=*2016.09.)	(C=*2016.09.) (D=*2016.09.)								

N:Old $\xleftarrow[\text{No}]{\text{Yes}}$ New, Q:Old $\xleftarrow[\text{Yes}]{\text{No}}$ New, R:Old $\xleftarrow[\text{Yes}]{\text{Yes}}$ New, S:Old $\xleftarrow[\text{No}]{\text{No}}$ New, W:Add, Z:Discontinued, F:Interchangeable by set, K:Q'ty Change

Copyright (C) YANMAR CO., LTD. All RightsReserved.

Fig.41. CABIN

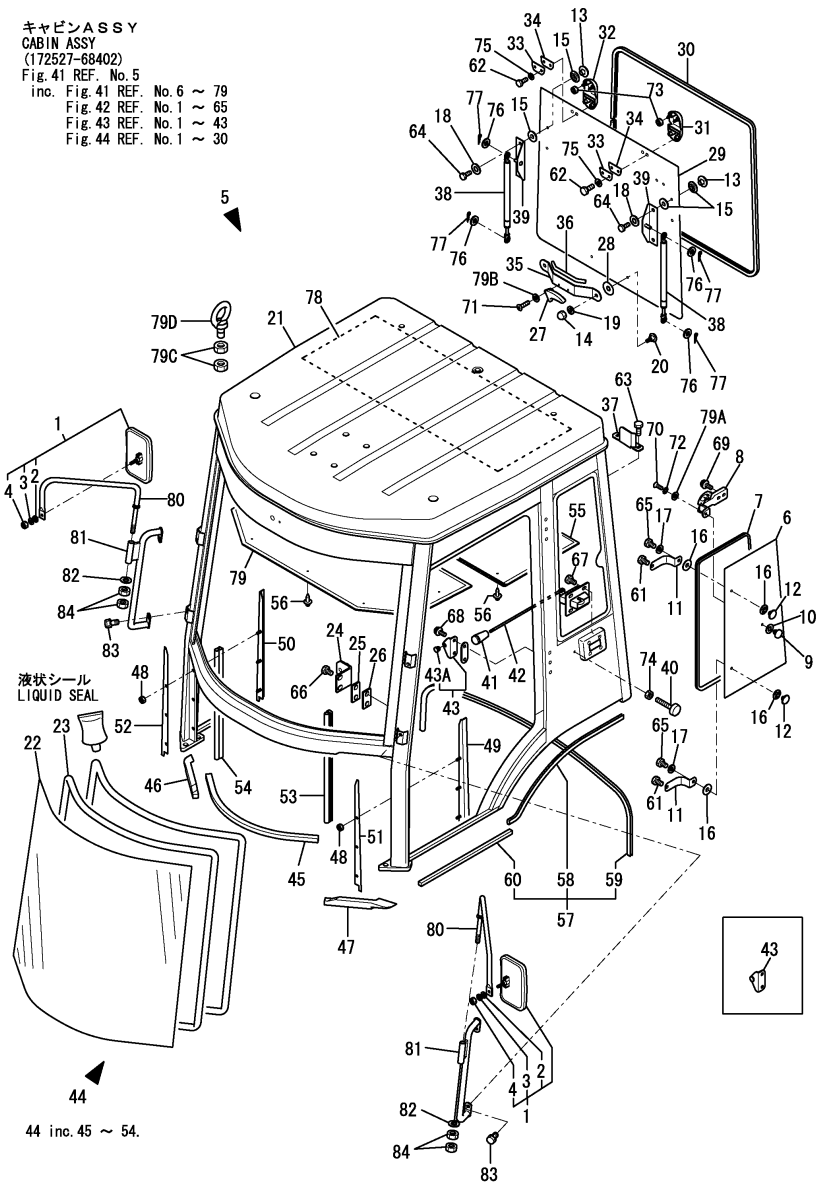

Remarks
(1)INC.FIG.41 REF.NO.6- 79,
FIG.42 REF.NO.1- 65,
FIG.43 REF.NO.1- 41 &
FIG.44 REF.NO.1- 30.

(A)=V3-5A (D)=V5-B
(B)=V3-5B (E)=
(C)=V4-5B (F)=

No.	Lev.	Parts No.	Description	Q'ty (A)	(B)	(C)	(D)	(E)	(F)	I	R
1	1	172524-06900	MIRROR ASSY	2	2	2	2				
2	2	22137-080000	WASHER, 8	2	2	2	2				
3	2	22217-080000	WASHER, SPRING 8	2	2	2	2				
4	2	26716-080002	NUT, M8	2	2	2	2				
5	1	172527-68402	CABIN ASSY	1							1
5-1	1	172527-68403	CABIN ASSY	1	1	1	1			S	1
	(A=M/#53110)										
6	2	172527-67180	GLASS	2	2	2	2				
7	2	172527-68220	TRIM	2	2	2	2				
8	2	172527-68230	HANDLE	2	2	2	2				
9	2	172527-68240	RETAINER	2	2	2	2				
10	2	172527-68251	CUSHION	2	2	2	2				
11	2	172527-68260	SPRING	4	4	4	4				
12	2	172527-68270	RETAINER	4	4	4	4				
13	2	172527-68270	RETAINER	4	4	4	4				
14	2	172527-69570	NUT	2	2	2	2				
15	2	172527-68280	CUSHION	8	8	8	8				
16	2	172527-68280	CUSHION	8	8	8	8				
17	2	172527-68290	WASHER	4	4	4	4				
18	2	172527-68290	WASHER	4	4	4	4				
19	2	172527-69830	WASHER	2	2	2	2				
20	2	172527-68870	BOLT	2	2	2	2				
21	2	172527-68412	BODY ASSY, CABIN	1							
21-1	2	172527-68413	BODY ASSY, CABIN	1	1	1	1			N	
	(A=M/#53110)										
22	2	172527-67170	GLASS	1	1	1	1				
23	2	172527-68430	RUBBER	1	1	1	1				
24	2	172527-68450	STRIKER	2	2	2	2				
25	2	172527-68460	PLATE	2	2	2	2				
26	2	172527-68470	PLATE	6	6	6	6				
27	2	172527-68480	HANDLE	1	1	1	1				
27-1	2	197821-82821	HANDLE, INNER B	1	1	1	1			R	
	(A=MXXXXX)	(B=MXXXXX)	(C=MXXXXX) (D=MXXXXX)								
28	2	172527-68491	CUSHION	2	2	2	2				
29	2	172527-67190	GLASS	1							
29-1	2	172528-67050	GLASS	1	1	1	1			S	
	(A=M/#53110)										
30	2	172527-68620	TRIM	1	1	1	1				
31	2	172527-68630	HINGE L	1	1	1	1				
32	2	172527-68640	HINGE R	1	1	1	1				
33	2	172527-68650	PLATE	2	2	2	2				
34	2	172527-68660	CUSHION	2	2	2	2				
35	2	172527-68681	BRACKET, RGH	1	1	1	1				
36	2	172527-68690	TRIM	1	1	1	1				
37	2	172527-68711	STOPPER	1	1	1	1				
38	2	172527-68720	SPRING, GAS	2	2	2	2				
39	2	172527-68730	STAY	2	2	2	2				
40	2	172527-68750	STOPPER	2	2	2	2				
41	2	172527-68760	GRIP	2	2	2	2				
42	2	172527-68770	LATCH	2	2	2	2				
43	2	172527-68780	BRACKET	2	2	2	2				

N:Old $\xleftarrow[\text{No}]{\text{Yes}}$ New, Q:Old $\xleftarrow[\text{Yes}]{\text{No}}$ New, R:Old $\xleftarrow[\text{Yes}]{\text{Yes}}$ New, S:Old $\xleftarrow[\text{No}]{\text{No}}$ New, W:Add, Z:Discontinued, F:Interchangeable by set, K:Q'ty Change

++ CONTINUE ++

Copyright (C) YANMAR CO., LTD. All RightsReserved.

Fig.41. CABIN

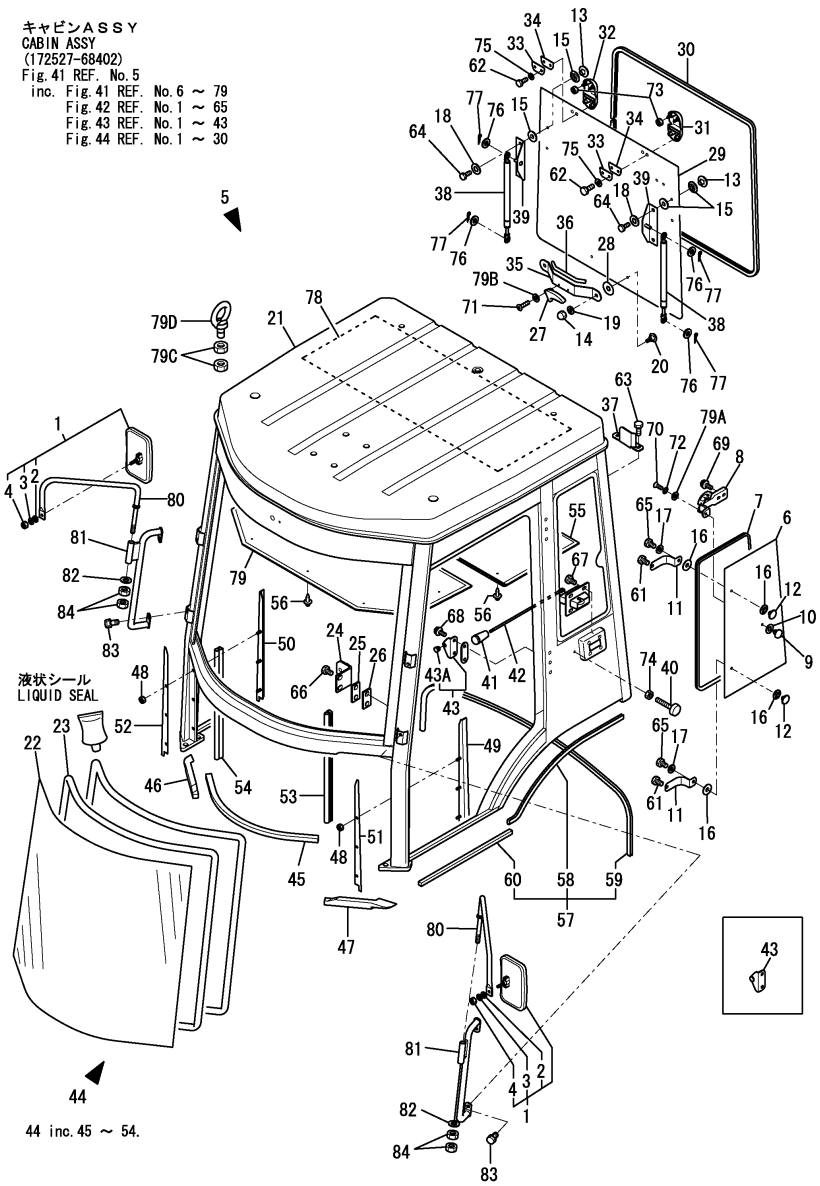

Remarks
(1)INC.FIG.41 REF.NO.6- 79,
FIG.42 REF.NO.1- 65,
FIG.43 REF.NO.1- 41 &
FIG.44 REF.NO.1- 30.

(A)=V3-5A (D)=V5-B
(B)=V3-5B (E)=
(C)=V4-5B (F)=

No.	Lev.	Parts No.	Description	Q'ty (A)	(B)	(C)	(D)	(E)	(F)	I	R
43A	3	172528-69420	GROMMET	2	2	2	2			W	
	(A=M/#53110)										
44	2	172527-69101	SEAL	1	1	1	1				
45	3	172527-69130	SEAL	1	1	1	1				
46	3	172527-69140	SEAL	1	1	1	1				
47	3	172527-69150	SEAL	1	1	1	1				
48	3	172527-69850	NUT, 6H	6	6	6	6				
49	3	172527-69951	PLATE, SEAL L	1	1	1	1				
50	3	172527-69961	PLATE, SEAL R	1	1	1	1				
51	3	172527-69971	SEAL	1	1	1	1				
52	3	172527-69981	SEAL	1	1	1	1				
53	3	172527-69991	RUBBER, TRIM	1	1	1	1				
54	3	172527-69090	RUBBER, TRIM R	1	1	1	1				
55	2	172527-69181	COVER	1	1	1	1				
56	2	172527-69190	RIVET	13	13	13	13				
57	2	172527-69200	SEAL	1	1	1	1				
58	3	172527-69210	SEAL	2	2	2	2				
59	3	172527-69220	SEAL	1	1	1	1				
60	3	172527-69230	SEAL	2	2	2	2				
61	2	172527-69610	BOLT M6X16	4	4	4	4				
62	2	172527-69610	BOLT M6X16	4	4	4	4				
63	2	172527-69610	BOLT M6X16	2	2	2	2				
64	2	172527-69620	BOLT	4	4	4	4				
65	2	172527-69620	BOLT	4	4	4	4				
66	2	172527-69630	BOLT	4	4	4	4				
67	2	172527-69640	BOLT	8	8	8	8				
67-1	2	26014-080162	BOLT, M8X 16	8	8	8	8				R
	(A=MXXXXX)	(B=MXXXXX)	(C=MXXXXX) (D=MXXXXX)								
68	2	172527-69720	SCREW, M6X16	4	4	4	4				
69	2	172527-69720	SCREW, M6X16	4	4	4	4				
70	2	172527-69730	SCREW, M5X12	2	2	2	2				
70-1	2	26579-050122	SCREW, M5X12	2	2	2	2				R
	(A=MXXXXX)	(B=MXXXXX)	(C=MXXXXX) (D=MXXXXX)								
71	2	172527-69740	SCREW, M5X16	2	2	2	2				
71-1	2	26579-050162	SCREW, M5X16	2	2	2	2				R
	(A=MXXXXX)	(B=MXXXXX)	(C=MXXXXX) (D=MXXXXX)								
72	2	172527-69820	WASHER, 5	2	2	2	2				
72-1	2	22232-050000	WASHER, SPRING 5	2	2	2	2				R
	(A=MXXXXX)	(B=MXXXXX)	(C=MXXXXX) (D=MXXXXX)								
73	2	172527-69850	NUT, 6H	4	4	4	4				
73-1	2	26716-060002	NUT, M6	4	4	4	4				R
	(A=MXXXXX)	(B=MXXXXX)	(C=MXXXXX) (D=MXXXXX)								
74	2	172527-69860	NUT, 10H	2	2	2	2				
74-1	2	26716-100002	NUT, M10	2	2	2	2				R
	(A=MXXXXX)	(B=MXXXXX)	(C=MXXXXX) (D=MXXXXX)								
75	2	22217-060000	WASHER, SPRING 6	4	4	4	4				
76	2	22217-080000	WASHER, SPRING 8	4	4	4	4				
76-1	2	22137-080000	WASHER, 8	4	4	4	4				R
	(A=MXXXXX)	(B=MXXXXX)	(C=MXXXXX) (D=MXXXXX)								
77	2	22372-080000	PIN, SNAP 8	4	4	4	4				
78	2	172527-69940	INSULATOR	1	1	1	1				

N:Old $\frac{\text{Yes}}{\text{No}}$ New, Q:Old $\frac{\text{No}}{\text{Yes}}$ New, R:Old $\frac{\text{Yes}}{\text{Yes}}$ New, S:Old $\frac{\text{No}}{\text{No}}$ New, W:Add, Z:Discontinued, F:Interchangeable by set, K:Q'ty Change

++ CONTINUE ++

Copyright (C) YANMAR CO., LTD. All RightsReserved.

Fig.41. CABIN

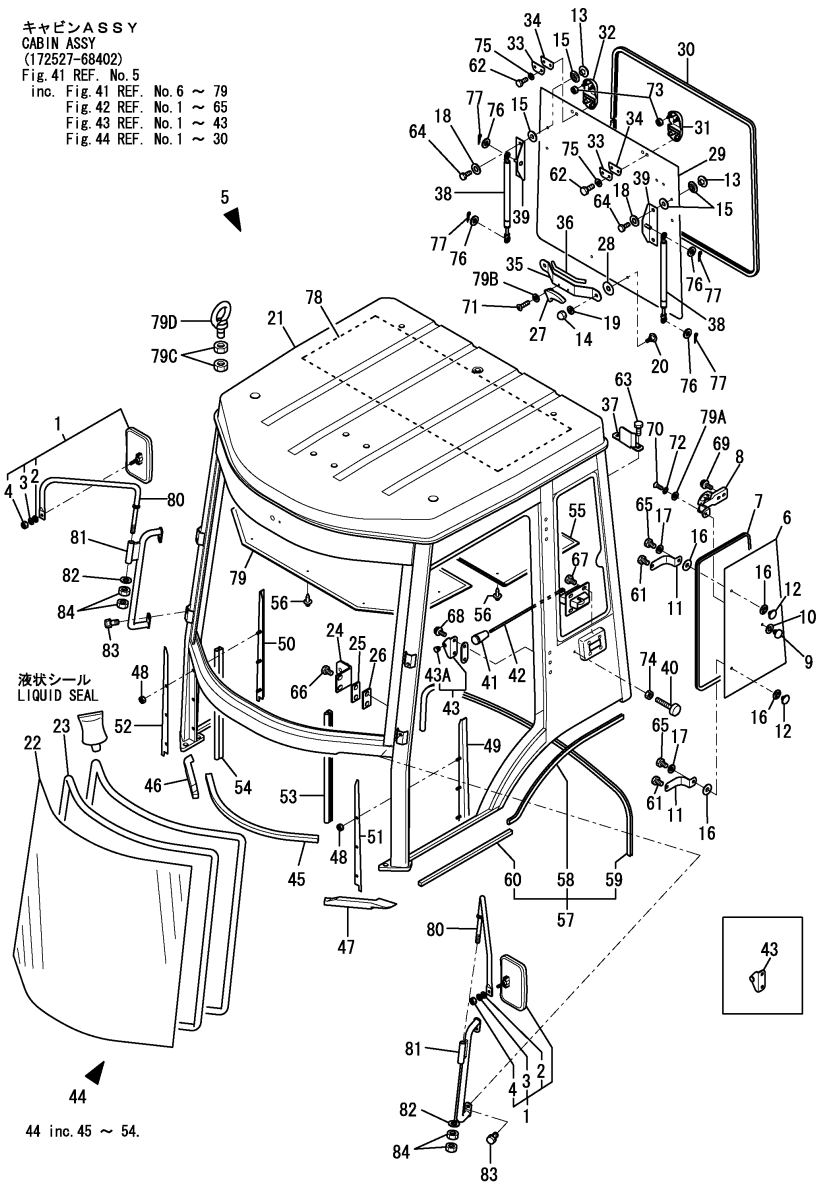

Remarks
(1)INC.FIG.41 REF.NO.6- 79,
FIG.42 REF.NO.1- 65,
FIG.43 REF.NO.1- 41 &
FIG.44 REF.NO.1- 30.

(A)=V3-5A (D)=V5-B
(B)=V3-5B (E)=
(C)=V4-5B (F)=

No.	Lev.	Parts No.	Description	Q'ty (A)	(B)	(C)	(D)	(E)	(F)	I	R
79	2	172527-69170	COVER	1	1	1	1				
79A	2	172527-68251	CUSHION	2	2	2	2			W	
	(A=MXXXXX)	(B=MXXXXX)	(C=MXXXXX) (D=MXXXXX)								
79B	2	172527-68251	CUSHION	2	2	2	2			W	
	(A=MXXXXX)	(B=MXXXXX)	(C=MXXXXX) (D=MXXXXX)								
79C	2	26116-080162	BOLT, M8X 16 PLATED	6	6	6	6			W	
	(A=MXXXXX)	(B=MXXXXX)	(C=MXXXXX) (D=MXXXXX)								
79D	2	26617-080002	BOLT, EYE M8	3	3	3	3			W	
	(A=MXXXXX)	(B=MXXXXX)	(C=MXXXXX) (D=MXXXXX)								
80	1	172527-68671	STAY ASSY, MIRROR	2	2	2	2				
80-1	1	172527-68671-2	STAY ASSY, MIRROR		2					S	
		(B=M/#53661)									
81	1	172524-69411	GRIP ASSY, CABIN	2	2	2	2				
81-1	1	172524-69411-2	GRIP ASSY, CABIN		2					S	
		(B=M/#53661)									
82	1	22137-140000	WASHER, 14	2	2	2	2				
83	1	26013-100202	BOLT, M10X 20	4	4	4	4				
84	1	26736-140002	NUT, M14	4	4	4	4				

N:Old ←Yes/No→ New, Q:Old ←No/Yes→ New, R:Old ←Yes/Yes→ New, S:Old ←No/No→ New, W:Add, Z:Discontinued, F:Interchangeable by set, K:Q'ty Change

Copyright (C) YANMAR CO., LTD. All RightsReserved.

Fig.42. CABIN DOOR

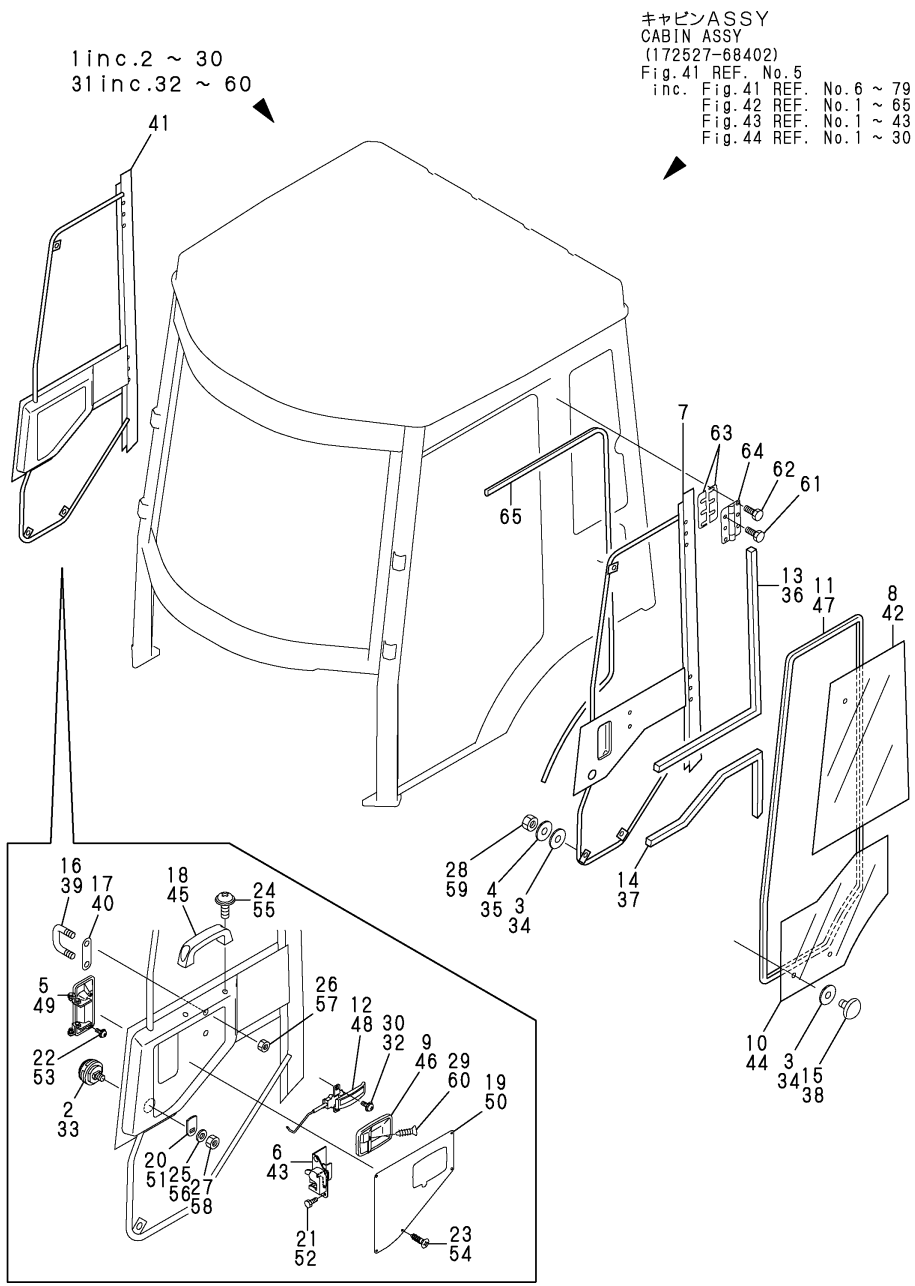

(A)=V3-5A (D)=V5-B
(B)=V3-5B (E)=
(C)=V4-5B (F)=

No.	Lev.	Parts No.	Description	Q'ty (A)	(B)	(C)	(D)	(E)	(F)	I	R
1	2	172527-68801	DOOR ASSY	1							
1-1	2	172527-67211	DOOR ASSY	1	1	1	1			N	
	(A=M/#53110)										
2	3	172524-65720	KEY SET, CYLINDER	1	1	1	1				
3	3	172527-68251	CUSHION	6	6	6	6				
4	3	172527-68290	WASHER	3	3	3	3				
5	3	172524-68781	HANDLE	1	1	1	1				
6	3	172524-68810	LATCH L	1	1	1	1				
7	3	172527-68811	BODY, DOOR	1							
7-1	3	172527-67221	BODY, DOOR	1	1	1	1			S	
	(A=M/#53110)										
8	3	172527-67230	GLASS	1	1	1	1				
9	3	172524-68830	HANDLE L,ESC	1	1	1	1				
10	3	172527-67240	GLASS	1	1	1	1				
11	3	172527-67950	TRIM	1	1	1	1				
12	3	172524-68850	HANDLE L,IS	1	1	1	1				
13	3	172527-68850	RUBBER	1	1	1	1				
14	3	172527-68860	RUBBER	1	1	1	1				
15	3	172527-68870	BOLT	3	3	3	3				
16	3	172527-68880	STRIKER	1	1	1	1				
17	3	172527-68890	PLATE	1	1	1	1				
18	3	172520-68940	HANDLE	1	1	1	1				
19	3	172527-68960	PLATE	1	1	1	1				
20	3	172524-69360	PLATE	1	1	1	1				
21	3	172527-69650	BOLT M6X16	3	3	3	3				
21-1	3	26014-060162	BOLT, M6X 16	3	3	3	3			R	
	(A=MXXXXX)	(B=MXXXXX)	(C=MXXXXX) (D=MXXXXX)								
22	3	26023-060162	SCREW, M6X16	2	2	2	2				
23	3	172527-69790	SCREW, M4X16	5	5	5	5				
23-1	3	22859-400161	SCREW, 4X16	5	5	5	5			R	
	(A=MXXXXX)	(B=MXXXXX)	(C=MXXXXX) (D=MXXXXX)								
24	3	172527-69810	SCREW, M6X16	2	2	2	2				
25	3	172527-69840	WASHER	1	1	1	1				
25-1	3	22137-100000	WASHER, 10	1	1	1	1			R	
	(A=MXXXXX)	(B=MXXXXX)	(C=MXXXXX) (D=MXXXXX)								
26	3	172527-69860	NUT, 10H	4	4	4	4				
26-1	3	26716-100002	NUT, M10	4	4	4	4			R	
	(A=MXXXXX)	(B=MXXXXX)	(C=MXXXXX) (D=MXXXXX)								
27	3	172527-69860	NUT, 10H	1	1	1	1				
27-1	3	26716-100002	NUT, M10	1	1	1	1			R	
	(A=MXXXXX)	(B=MXXXXX)	(C=MXXXXX) (D=MXXXXX)								
28	3	172527-69870	NUT	3	3	3	3				
29	3	172527-69880	SCREW, M4X20	2	2	2	2				
29-1	3	22869-400200	SCREW, 4X20	2	2	2	2			R	
	(A=MXXXXX)	(B=MXXXXX)	(C=MXXXXX) (D=MXXXXX)								
30	3	26023-060162	SCREW, M6X16	2	2	2	2				
31	2	172527-68901	DOOR ASSY	1							
31-1	2	172527-67251	DOOR ASSY	1	1	1	1			N	
	(A=M/#53110)										
32	3	26023-060162	SCREW, M6X16	2	2	2	2				
33	3	172524-65720	KEY SET, CYLINDER	1	1	1	1				

N:Old $\overset{\text{Yes}}{\underset{\text{No}}{\leftrightarrow}}$ New, Q:Old $\overset{\text{No}}{\underset{\text{Yes}}{\leftrightarrow}}$ New, R:Old $\overset{\text{Yes}}{\underset{\text{Yes}}{\leftrightarrow}}$ New, S:Old $\overset{\text{No}}{\underset{\text{No}}{\leftrightarrow}}$ New, W:Add, Z:Discontinued, F:Interchangeable by set, K:Q'ty Change

++ CONTINUE ++

Copyright (C) YANMAR CO., LTD. All RightsReserved.

Fig.42. CABIN DOOR

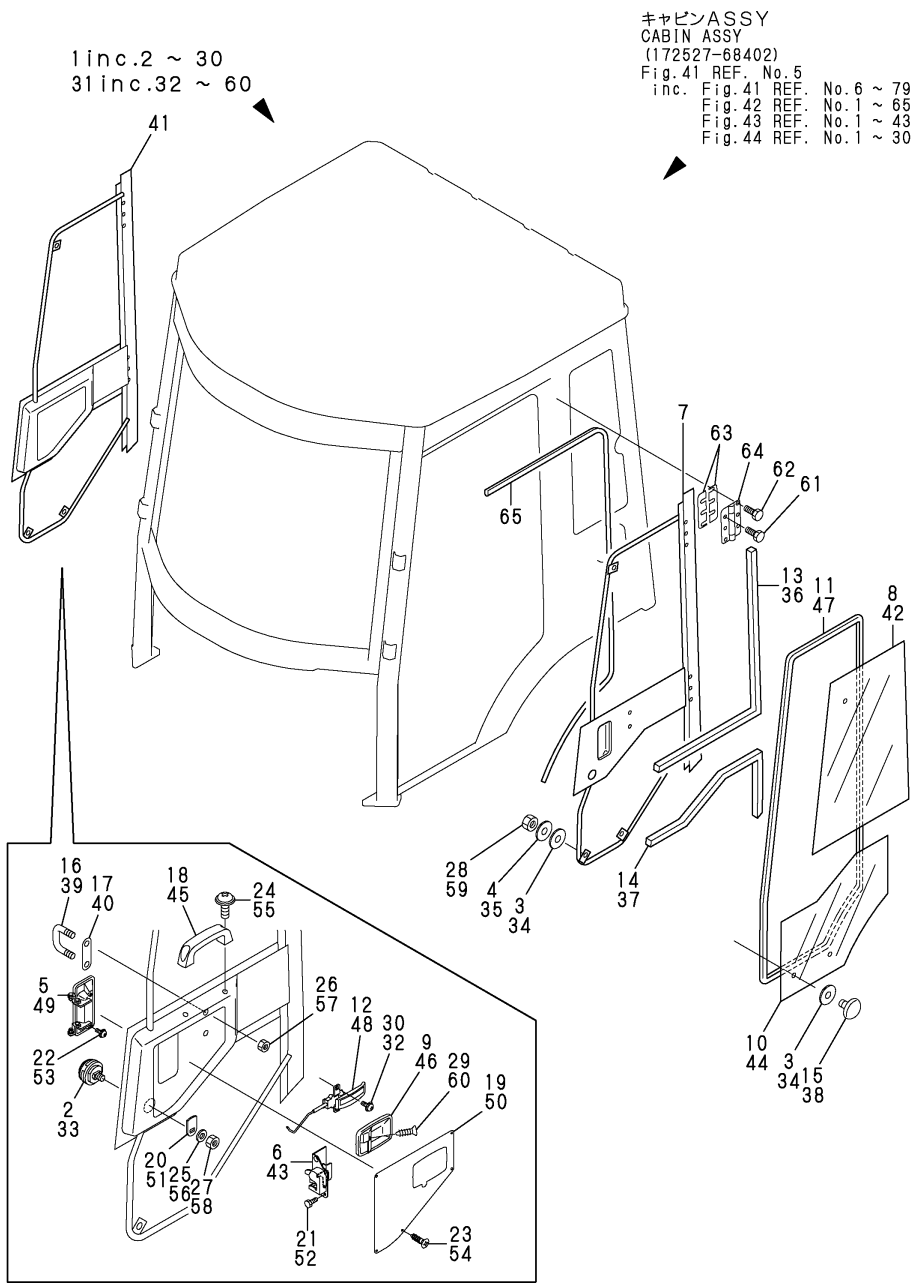

(A)=V3-5A (D)=V5-B
(B)=V3-5B (E)=
(C)=V4-5B (F)=

No.	Lev.	Parts No.	Description	Q'ty (A)	(B)	(C)	(D)	(E)	(F)	I	R
34	3	172527-68251	CUSHION	6	6	6	6				
35	3	172527-68290	WASHER	3	3	3	3				
36	3	172527-68850	RUBBER	1	1	1	1				
37	3	172527-68860	RUBBER	1	1	1	1				
38	3	172527-68870	BOLT	3	3	3	3				
39	3	172527-68880	STRIKER	1	1	1	1				
40	3	172527-68890	PLATE	1	1	1	1				
41	3	172527-68911	BODY, DOOR	1							
41-1	3	172527-67261	BODY, DOOR	1	1	1	1			S	
	(A=M/#53110)										
42	3	172527-67270	GLASS	1	1	1	1				
43	3	172524-68930	LATCH R	1	1	1	1				
44	3	172527-67280	GLASS	1	1	1	1				
45	3	172520-68940	HANDLE	1	1	1	1				
46	3	172524-68940	HANDLE R,ESC	1	1	1	1				
47	3	172527-67850	TRIM	1	1	1	1				
48	3	172524-68950	HANDLE R,IS	1	1	1	1				
49	3	172527-68950	HANDLE	1	1	1	1				
50	3	172527-68960	PLATE	1	1	1	1				
51	3	172524-69360	PLATE	1	1	1	1				
52	3	172527-69650	BOLT M6X16	3	3	3	3				
52-1	3	26014-060162	BOLT, M6X 16	3	3	3	3				R
	(A=MXXXXX)	(B=MXXXXX)	(C=MXXXXX) (D=MXXXXX)								
53	3	26023-060162	SCREW, M6X16	2	2	2	2				
54	3	172527-69790	SCREW, M4X16	5	5	5	5				
54-1	3	22859-400161	SCREW, 4X16	5	5	5	5				R
	(A=MXXXXX)	(B=MXXXXX)	(C=MXXXXX) (D=MXXXXX)								
55	3	172527-69810	SCREW, M6X16	2	2	2	2				
56	3	172527-69840	WASHER	1	1	1	1				
56-1	3	22137-100000	WASHER, 10	1	1	1	1				R
	(A=MXXXXX)	(B=MXXXXX)	(C=MXXXXX) (D=MXXXXX)								
57	3	172527-69860	NUT, 10H	4	4	4	4				
57-1	3	26716-100002	NUT, M10	4	4	4	4				R
	(A=MXXXXX)	(B=MXXXXX)	(C=MXXXXX) (D=MXXXXX)								
58	3	172527-69860	NUT, 10H	1	1	1	1				
58-1	3	26716-100002	NUT, M10	1	1	1	1				R
	(A=MXXXXX)	(B=MXXXXX)	(C=MXXXXX) (D=MXXXXX)								
59	3	172527-69870	NUT	3	3	3	3				
60	3	172527-69880	SCREW, M4X20	2	2	2	2				
60-1	3	22869-400200	SCREW, 4X20	2	2	2	2				R
	(A=MXXXXX)	(B=MXXXXX)	(C=MXXXXX) (D=MXXXXX)								
61	2	172527-69670	BOLT	12	12	12	12				
62	2	172527-69680	BOLT	12	12	12	12				
63	2	172527-68970	SHIM	4	4	4	4				
64	2	172527-68980	HINGE, DOOR	4	4	4	4				
65	2	172527-68990	TRIM	2	2	2	2				

N:Old $\xleftrightarrow[\text{No}]{\text{Yes}}$ New, Q:Old $\xleftrightarrow[\text{Yes}]{\text{No}}$ New, R:Old $\xleftrightarrow[\text{Yes}]{\text{Yes}}$ New, S:Old $\xleftrightarrow[\text{No}]{\text{No}}$ New, W:Add, Z:Discontinued, F:Interchangeable by set, K:Q'ty Change

Copyright (C) YANMAR CO., LTD. All RightsReserved.

Fig.43. ELECTRIC PART & WIPER(CABIN)

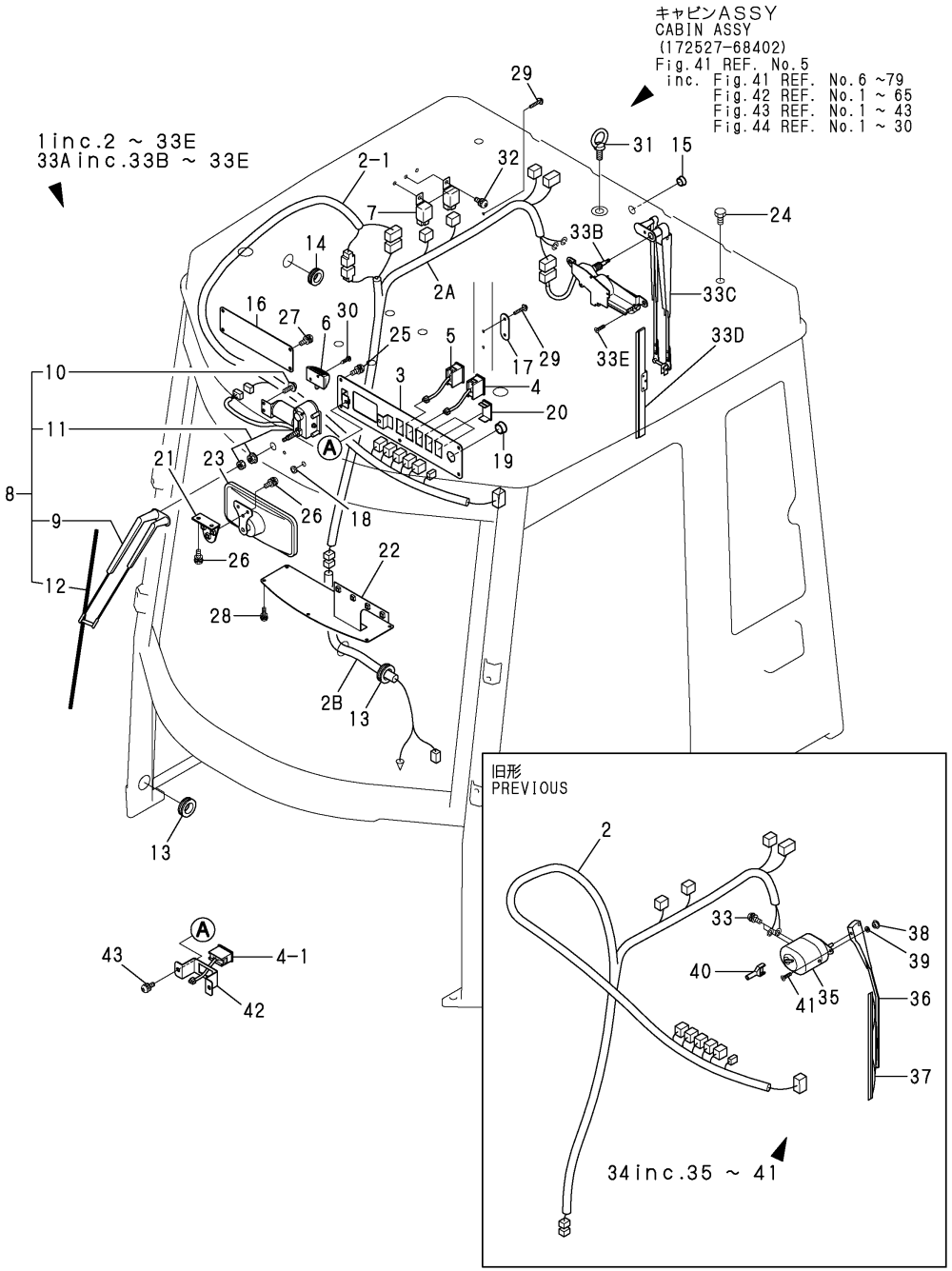

(A)=V3-5A (D)=V5-B
(B)=V3-5B (E)=
(C)=V4-5B (F)=

No.	Lev.	Parts No.	Description	Q'ty (A)	(B)	(C)	(D)	(E)	(F)	I	R
1	2	172527-17601	ELECTRIC PARTS ASSY	1	1	1	1				
2	3	172527-17611	HARNESS, WIRE	1							
2-1	3	172528-17610	HARNESS, WIRE CABIN	1	1	1	1			S	
	(A=M/#53110)										
2A	3	172528-17620	HARNESS, WIRE	1	1	1	1			W	
	(A=M/#53110)										
2B	3	172528-17630	WIRING HARNESS A	1	1	1	1			W	
	(A=M/#53110)										
3	3	172527-17620	PANEL	1	1	1	1				
4	3	172527-17630	SWITCH, WIPER	1							
4-1	3	172527-17630	SWITCH, WIPER	2	2	2	2			K	
	(A=M/#53110)										
5	3	172527-17640	SWITCH, HEATER	1	1	1	1				
6	3	172527-17650	LAMP	1	1	1	1				
7	3	172520-17690	RELAY	2	2	2	2				
8	3	172527-17710	WIPER ASSY,FRONT	1	1	1	1				
9	4	172527-17720	ARM, WIPER	1	1	1	1				
10	4	172527-69810	SCREW, M6X16	2	2	2	2				
11	4	172524-17741	MOTOR,WIPER	1	1	1	1				
12	4	172527-17730	BLADE,WIPER	1	1	1	1				
13	3	172527-17810	GROMMET, 22X28	2	2	2	2				
14	3	172527-17820	GROMMET, 32	1	1	1	1				
15	3	172527-17830	CAP	1	1	1	1				
16	3	172527-17840	PLATE	1	1	1	1				
17	3	172527-17850	PLATE	1	1	1	1				
18	3	172527-17860	CAP	1	1	1	1				
19	3	172527-17870	PLUG	1	1	1	1				
20	3	172527-17880	CAP	3	3	3	3				
21	3	172527-69250	STAY	1	1	1	1				
22	3	172527-69260	COVER	1	1	1	1				
23	3	172524-69600	MIRROR	1	1	1	1				
24	3	172527-69630	BOLT	6	6	6	6				
25	3	172527-69720	SCREW, M6X16	5	5	5	5				
26	3	172527-69720	SCREW, M6X16	5	5	5	5				
27	3	172527-69720	SCREW, M6X16	4	4	4	4				
28	3	172527-69760	SCREW, M5X16	6	6	6	6				
29	3	172527-69780	SCREW, M4X20	3	3	3	3				
30	3	172527-69790	SCREW, M4X16	2	2	2	2				
31	3	26617-080002	BOLT, EYE M8	3	3	3	3				
32	3	172527-69720	SCREW, M6X16	2	2	2	2				
33	3	172527-69720	SCREW, M6X16	2						Z	
	(A=M/#53110)										
33A	3	172528-17750	WIPER,REAR ASSY	1	1	1	1			W	
	(A=M/#53110)										
33B	4	172528-17760	MOTOR, WIPPER	1	1	1	1			W	
	(A=M/#53110)										
33C	4	172528-17770	ARM, WIPER	1	1	1	1			W	
	(A=M/#53110)										
33D	4	172528-17780	BLADE,WIPER	1	1	1	1			W	
	(A=M/#53110)										
33E	4	172528-69920	SCREW 8X12	2	2	2	2			W	

N:Old $\xleftarrow[\text{No}]{\text{Yes}}$ New, Q:Old $\xleftarrow[\text{Yes}]{\text{No}}$ New, R:Old $\xleftarrow[\text{Yes}]{\text{Yes}}$ New, S:Old $\xleftarrow[\text{No}]{\text{No}}$ New, W:Add, Z:Discontinued, F:Interchangeable by set, K:Q'ty Change

++ CONTINUE ++

Copyright (C) YANMAR CO., LTD. All RightsReserved.

Fig.43. ELECTRIC PART & WIPER(CABIN)

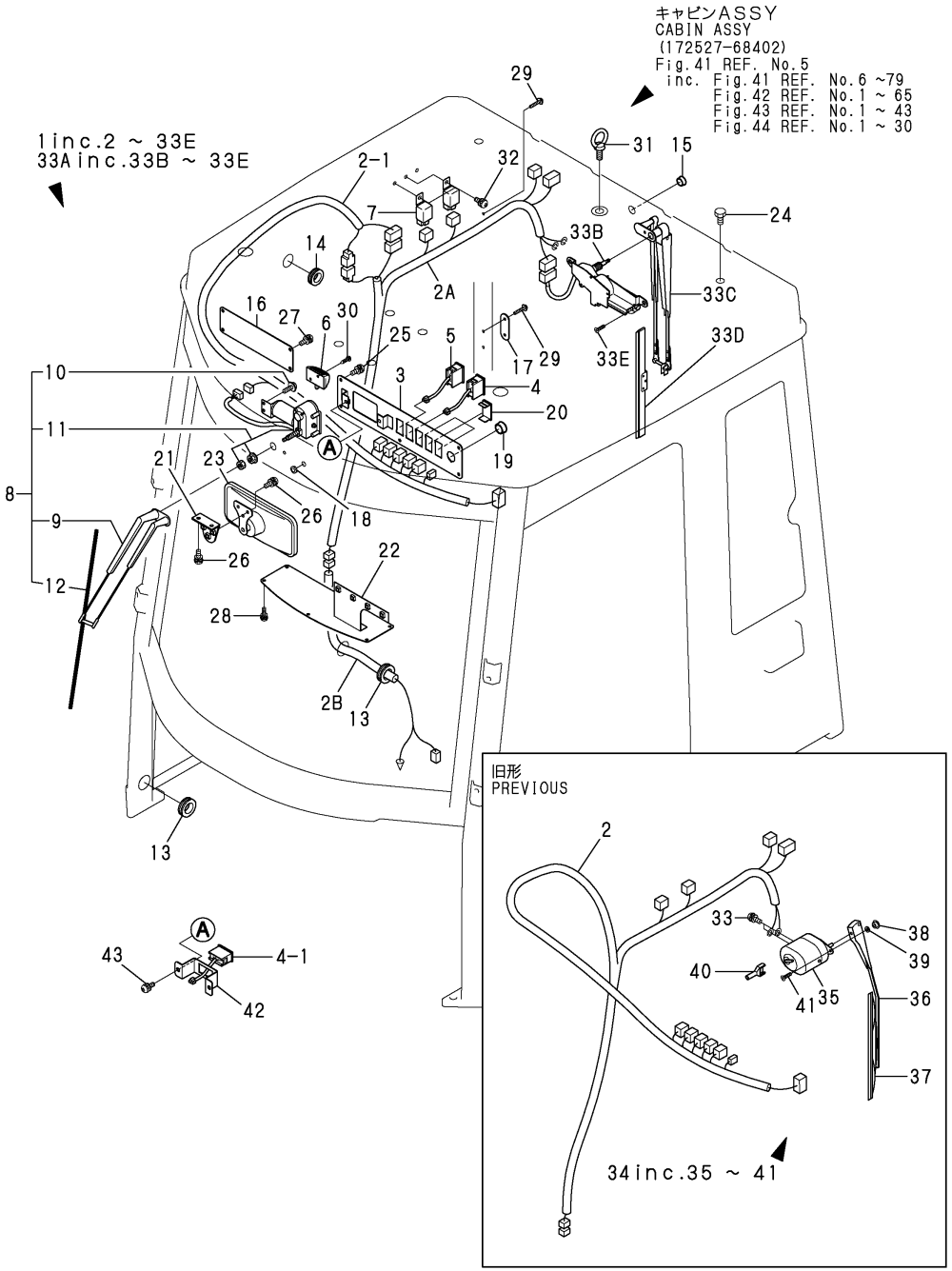

(A)=V3-5A (D)=V5-B
(B)=V3-5B (E)=
(C)=V4-5B (F)=

No.	Lev.	Parts No.	Description	Q'ty (A)	(B)	(C)	(D)	(E)	(F)	I	R
		(A=M/#53110)									
34	2	172527-17750	WIPER,REAR ASSY	1						Z	
		(A=M/#53110)									
35	3	172527-17760	MOTOR, WIPER	1						Z	
		(A=M/#53110)									
36	3	172527-17770	ARM, WIPER	1						Z	
		(A=M/#53110)									
37	3	172527-17780	BLADE,WIPER	1						Z	
		(A=M/#53110)									
38	3	172527-68240	RETAINER	1						Z	
		(A=M/#53110)									
39	3	172527-68251	CUSHION	1						Z	
		(A=M/#53110)									
40	3	172527-17790	COVER	1						Z	
		(A=M/#53110)									
41	3	172527-69740	SCREW, M5X16	1						Z	
		(A=M/#53110)									
42	2	172528-17800	BRACKET	1	1	1	1			W	
		(A=M/#53110)									
43	2	172527-69720	SCREW, M6X16	2	2	2	2			W	
		(A=M/#53110)									

N:Old $\xleftarrow[\text{No}]{\text{Yes}}$ New, Q:Old $\xleftarrow[\text{Yes}]{\text{No}}$ New, R:Old $\xleftrightarrow[\text{Yes}]{\text{Yes}}$ New, S:Old $\xleftrightarrow[\text{No}]{\text{No}}$ New, W:Add, Z:Discontinued, F:Interchangeable by set, K:Q'ty Change

Copyright (C) YANMAR CO., LTD. All RightsReserved.

Fig.44. HEATER(CABIN)

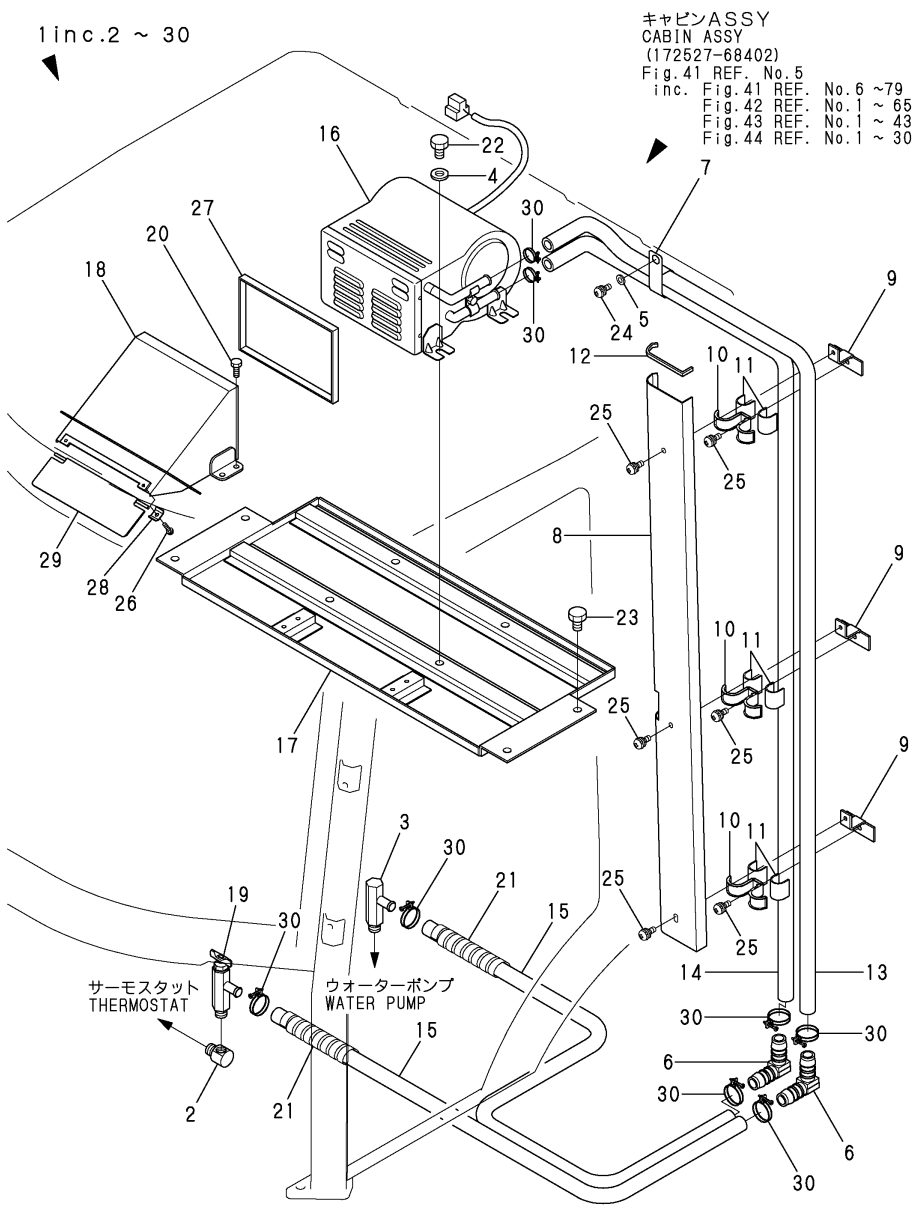

(A)=V3-5A (D)=V5-B
(B)=V3-5B (E)=
(C)=V4-5B (F)=

No.	Lev.	Parts No.	Description	Q'ty (A)	(B)	(C)	(D)	(E)	(F)	I	R
1	2	172527-69400	HEATER ASSY	1	1	1	1				
2	3	172524-68280	ELBOW	1	1	1	1				
3	3	172524-68290	CONNECTOR	1	1	1	1				
4	3	172527-68370	WASHER	4	4	4	4				
5	3	172527-68380	WASHER	1	1	1	1				
6	3	172527-68550	CONNECTOR	2	2	2	2				
7	3	172527-68560	CLAMP	1	1	1	1				
8	3	172527-68570	COVER, HOSE	1	1	1	1				
9	3	172527-68580	PLATE	3	3	3	3				
10	3	172527-68590	CLAMP, HOSE	3	3	3	3				
11	3	172527-68740	RUBBER	6	6	6	6				
12	3	172527-69360	GROMMET	1	1	1	1				
13	3	172527-69371	HOSE	1	1	1	1				
14	3	172527-69381	HOSE	1	1	1	1				
15	3	172527-69390	HOSE G808Y040	2	2	2	2				
16	3	172527-69410	HEATER	1	1	1	1				
17	3	172527-69430	BASE	1	1	1	1				
18	3	172527-69440	DUCT, HEATER	1	1	1	1				
19	3	172520-69580	COCK	1	1	1	1				
20	3	172527-69610	BOLT M6X16	4	4	4	4				
21	3	172520-69650	TUBE, SPIRAL	2	2	2	2				
22	3	172527-69670	BOLT	4	4	4	4				
23	3	172527-69670	BOLT	4	4	4	4				
24	3	172527-69720	SCREW, M6X16	1	1	1	1				
25	3	172527-69720	SCREW, M6X16	6	6	6	6				
26	3	172527-69770	SCREW, M4X16	2	2	2	2				
27	3	172527-69910	SEAL, HEATER	1	1	1	1				
28	3	172527-69920	CLAMP	2	2	2	2				
29	3	172527-69930	PLATE	1	1	1	1				
30	3	23000-022000	CLAMP, 22	8	8	8	8				

N:Old ←Yes/No→ New, Q:Old ←No/Yes→ New, R:Old ←Yes/Yes→ New, S:Old ←No/No→ New, W:Add, Z:Discontinued, F:Interchangeable by set, K:Q'ty Change

Copyright (C) YANMAR CO., LTD. All RightsReserved.

Fig.45. LIFT CYLINDER

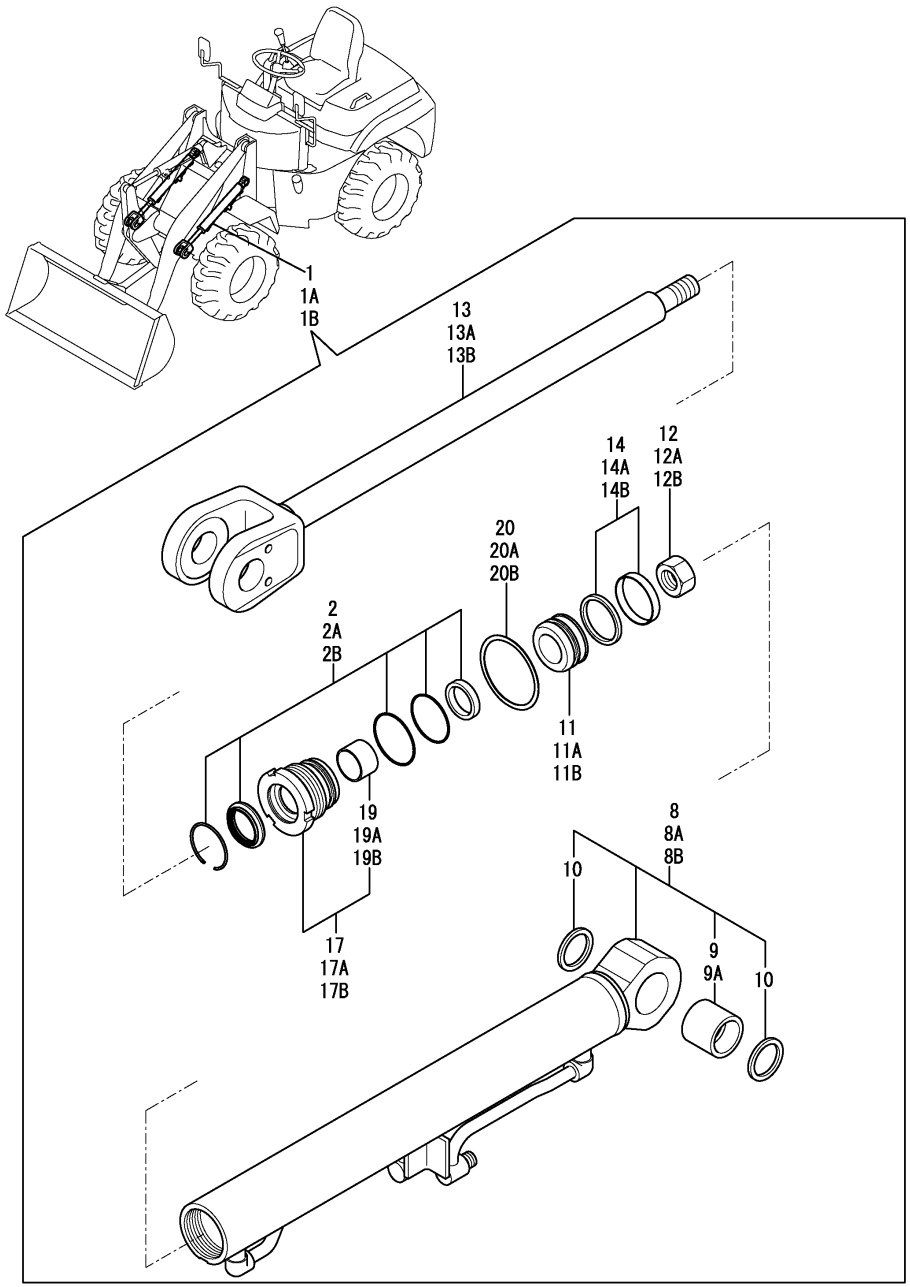

(A)=V3-5A (D)=V5-B
(B)=V3-5B (E)=
(C)=V4-5B (F)=

No.	Lev.	Parts No.	Description	Q'ty (A)	(B)	(C)	(D)	(E)	(F)	I	R
1	1	172527-72502	CYLINDER ASSY, LIFT	2	2						
1A	1	172528-72502	CYLINDER ASSY, LIFT			2					
1B	1	172529-72502	CYLINDER ASSY, LIFT				2				
2	2	172457-72050	SEAL SET, HEAD	2	2						
2A	2	172456-72050	SEAL SET, HEAD			2					
2B	2	172457-72010	SEAL SET, HEAD				2				
8	2	172527-72110	TUBE ASSY, LIFT	2	2						
8A	2	172528-72700	TUBE ASSY, LIFT			2					
8B	2	172529-72110	TUBE ASSY, LIFT				2				
9	3	172168-72410	BUSH	2	2						
9A	3	172168-72410	BUSH			2	2				
10	3	172448-72650	SEAL, DUST	4	4	4	4				
11	2	172171-72120	PISTON	2	2						
11A	2	172456-72190	PISTON			2					
11B	2	172148-72050	PISTON				2				
12	2	172171-72130	NUT, M24	2	2						
12A	2	172141-72250	NUT			2					
12B	2	933111-20200	NUT				2				
13	2	172527-72310	ROD ASSY, LIFT	2	2						
13A	2	172528-72750	ROD ASSY, LIFT			2					
13B	2	172529-72150	ROD ASSY, LIFT				2				
14	2	172137-72453	SEAL SET, PISTON 60A	2	2						
14A	2	172460-72070	SEAL SET, PISTON			2					
14B	2	172444-72961	SEAL SET, 75 40				2				
17	2	172141-72540	HEAD 6035, CYLINDER	2	2						
17A	2	172143-72400	HEAD 70 40			2					
17B	2	172148-72390	HEAD 75 45				2				
19	3	24550-035300	BUSH, 35X30	2	2						
19A	3	24550-040300	BUSH, 40X30			2					
19B	3	24550-045300	BUSH, 45X30				2				
20	2	933125-59600	WASHER 60 B, LOCK	2	2						
20A	2	172141-72420	WASHER, LOCK			2					
20B	2	172141-72190	WASHER, LOCK				2				

N:Old $\frac{\text{Yes}}{\text{No}}$ New, Q:Old $\frac{\text{No}}{\text{Yes}}$ New, R:Old $\frac{\text{Yes}}{\text{Yes}}$ New, S:Old $\frac{\text{No}}{\text{No}}$ New, W:Add, Z:Discontinued, F:Interchangeable by set, K:Q'ty Change

Copyright (C) YANMAR CO., LTD. All RightsReserved.

Fig.46. DUMP CYLINDER

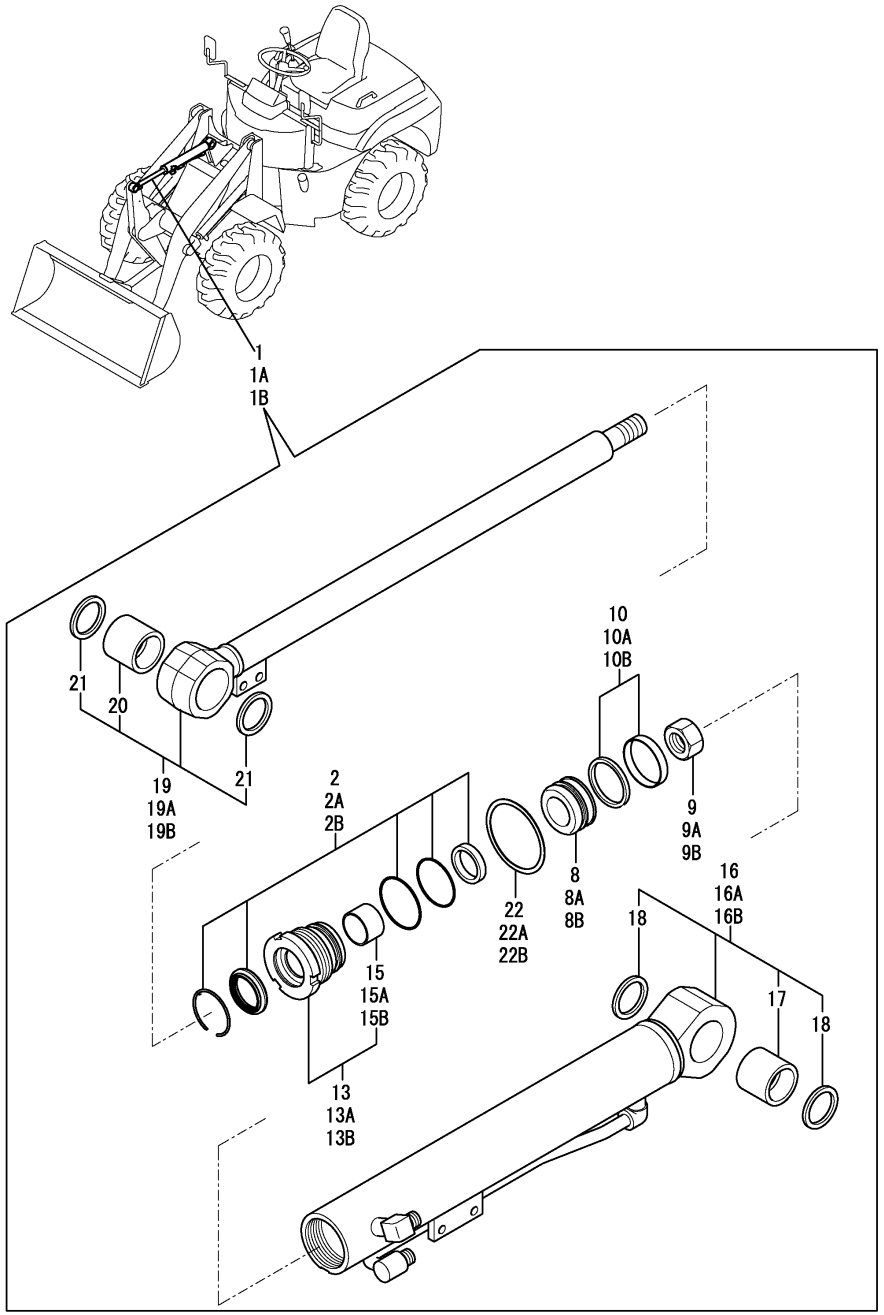

(A)=V3-5A (D)=V5-B
(B)=V3-5B (E)=
(C)=V4-5B (F)=

No.	Lev.	Parts No.	Description	Q'ty (A)	(B)	(C)	(D)	(E)	(F)	I	R
1	1	172527-72601	CYLINDER ASSY, DUMP	1	1						
1A	1	172528-72601	CYLINDER ASSY, DUMP			1					
1B	1	172529-72601	CYLINDER ASSY, DUMP				1				
2	2	172457-72050	SEAL SET, HEAD	1	1						
2A	2	172456-72050	SEAL SET, HEAD			1					
2B	2	172457-72010	SEAL SET, HEAD				1				
8	2	172171-72120	PISTON	1	1						
8A	2	172456-72190	PISTON			1					
8B	2	172148-72050	PISTON				1				
9	2	172171-72130	NUT, M24	1	1						
9A	2	172141-72250	NUT			1					
9B	2	933111-20200	NUT				1				
10	2	172137-72453	SEAL SET, PISTON 60A	1	1						
10A	2	172460-72070	SEAL SET, PISTON			1					
10B	2	172444-72961	SEAL SET, 75 40				1				
13	2	172141-72540	HEAD 6035, CYLINDER	1	1						
13A	2	172143-72400	HEAD 70 40			1					
13B	2	172148-72390	HEAD 75 45				1				
15	3	24550-035300	BUSH, 35X30	1	1						
15A	3	24550-040300	BUSH, 40X30			1					
15B	3	24550-045300	BUSH, 45X30				1				
16	2	172527-72670	TUBE ASSY, DUMP	1	1						
16A	2	172528-72800	TUBE ASSY, DUMP			1					
16B	2	172529-72210	TUBE ASSY, DUMP				1				
17	3	172168-72410	BUSH	1	1	1	1				
18	3	172448-72650	SEAL, DUST	2	2	2	2				
19	2	172527-72750	ROD ASSY, DUMP	1	1						
19A	2	172528-72840	ROD ASSY, DUMP			1					
19B	2	172529-72260	ROD ASSY, DUMP				1				
20	3	172168-72410	BUSH	1	1	1	1				
21	3	172448-72650	SEAL, DUST	2	2	2	2				
22	2	933125-59600	WASHER 60 B, LOCK	1	1						
22A	2	172141-72420	WASHER, LOCK			1					
22B	2	172141-72190	WASHER, LOCK				1				

N:Old $\frac{\text{Yes}}{\text{No}}$ New, Q:Old $\frac{\text{No}}{\text{Yes}}$ New, R:Old $\frac{\text{Yes}}{\text{Yes}}$ New, S:Old $\frac{\text{No}}{\text{No}}$ New, W:Add, Z:Discontinued, F:Interchangeable by set, K:Q'ty Change

Copyright (C) YANMAR CO., LTD. All RightsReserved.

Fig.47. POWER STEERING CYLINDER

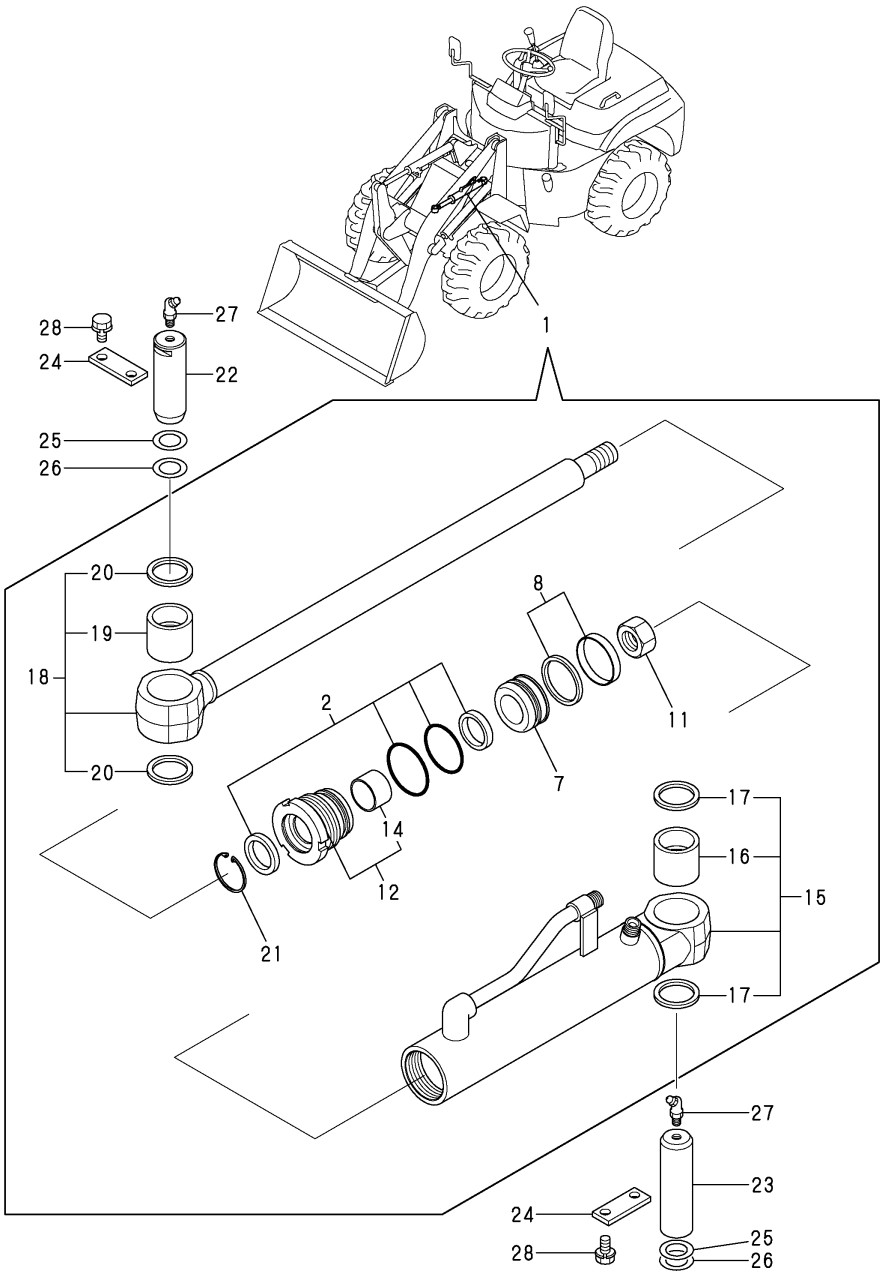

(A)=V3-5A (D)=V5-B
(B)=V3-5B (E)=
(C)=V4-5B (F)=

No.	Lev.	Parts No.	Description	Q'ty (A)	(B)	(C)	(D)	(E)	(F)	I	R
1	1	172527-72801	CYLINDER ASSY	1	1	1					
1A	1	172529-72801	CYLINDER ASSY				1				
2	2	172447-72020	SEAL SET, HEAD 60 30	1	1	1					
2A	2	172449-72040	SEAL SET, HEAD 65 35				1				
7	2	172137-72431	PISTON 60G	1	1	1					
7A	2	172173-72352	PISTON 65 24				1				
8	2	172137-72453	SEAL SET, PISTON 60A	1	1	1					
8A	2	172148-72941	SEAL SET, PISTON				1				
11	2	172141-72580	NUT, M20	1	1	1					
11A	2	172171-72130	NUT, M24				1				
12	2	172447-72860	HEAD 60 30	1	1	1					
12A	2	172449-72810	HEAD CMP 65-35				1				
14	3	24550-030300	BUSH, 30X30	1	1	1					
14A	3	24550-035300	BUSH, 35X30				1				
15	2	172527-72900	TUBE ASSY, STEERING	1	1	1					
15A	2	172529-72310	TUBE ASSY, STEERING				1				
16	3	172527-72960	PIN BUSH,35 35	1	1	1	1				
17	3	172448-81610	SEAL, DUST 35X45X4	2	2	2	2				
18	2	172527-72970	ROD ASSY, STEERING	1	1	1					
18A	2	172529-72350	ROD ASSY, STEERING				1				
19	3	172527-72960	PIN BUSH,35 35	1	1	1	1				
20	3	172448-81610	SEAL, DUST 35X45X4	2	2	2	2				
21	2	933125-59600	WASHER 60 B, LOCK	1	1	1					
21A	2	172142-72560	WASHER, LOCK				1				
22	1	172524-72420	PIN 35X103	1	1	1	1				
23	1	172527-72420	PIN 35X122	1	1	1	1				
24	1	172512-91210	PLATE, PIN LOCK	2	2	2	2				
25	1	172141-84610	SHIM, 35X1.2	1	1	1	1				
26	1	172141-84620	SHIM, 35X0.8	1	1	1	1				
27	1	24764-040000	NIPPLE, GREASE B	2	2	2	2				
28	1	26013-100202	BOLT, M10X 20	4	4	4	4				

N:Old $\frac{\text{Yes}}{\text{No}}$ New, Q:Old $\frac{\text{No}}{\text{Yes}}$ New, R:Old $\frac{\text{Yes}}{\text{Yes}}$ New, S:Old $\frac{\text{No}}{\text{No}}$ New, W:Add, Z:Discontinued, F:Interchangeable by set, K:Q'ty Change

Copyright (C) YANMAR CO., LTD. All RightsReserved.

Fig.48. HST PUMP

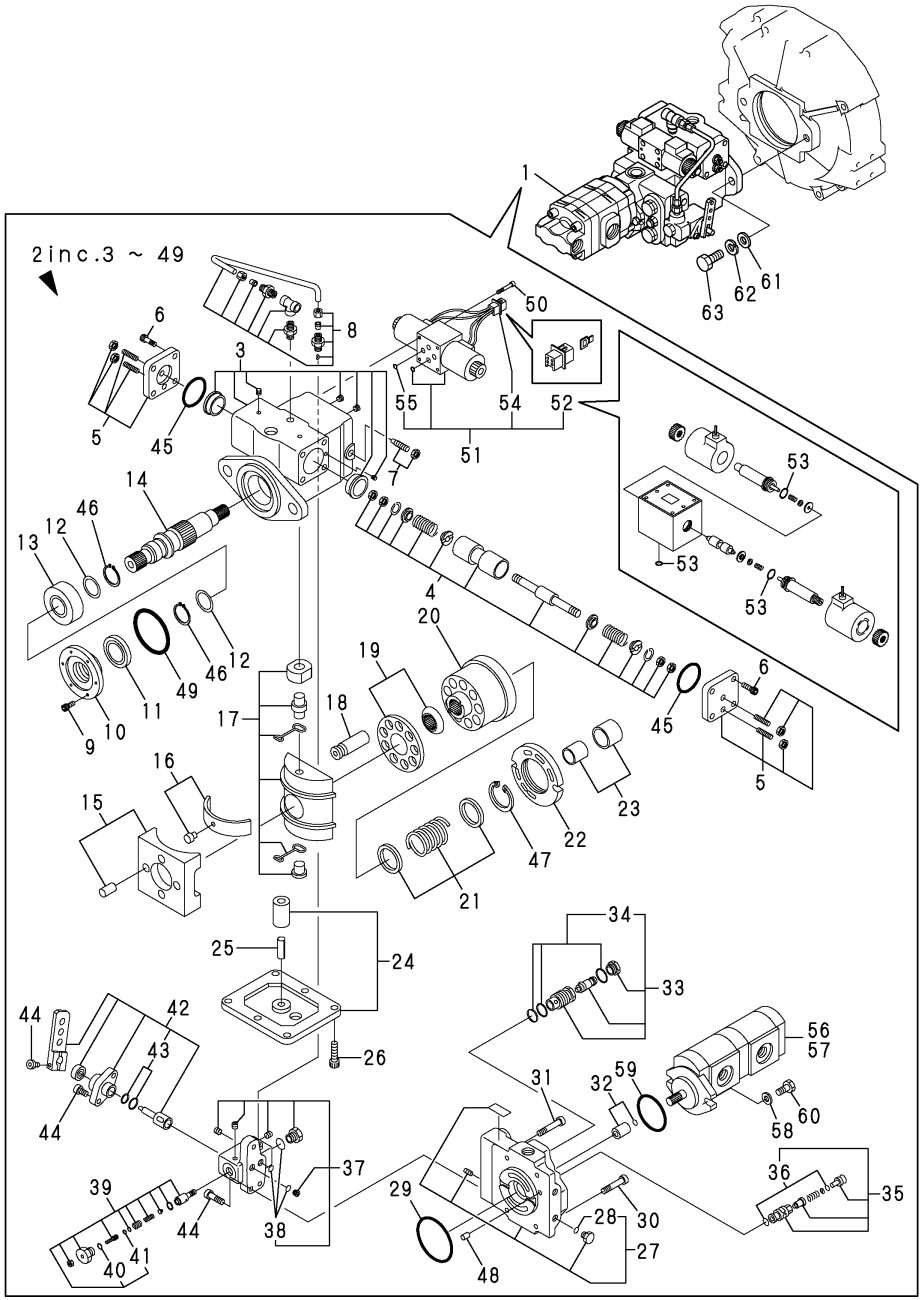

(A)=V3-5A (D)=V5-B
(B)=V3-5B (E)=
(C)=V4-5B (F)=

No.	Lev.	Parts No.	Description	Q'ty (A)	(B)	(C)	(D)	(E)	(F)	I	R
1	1	172527-73100	PUMP ASSY H.S.T.	1							
2	2	172527-73110	PUMP H.S.T.	1							
3	3	172527-73120	HOUSING	1							
4	3	172527-73130	PISTON SET	1							
5	3	172527-73140	COVER	2							
6	3	172527-73150	BOLT	8							
7	3	172527-73160	BOLT	1							
8	3	172527-73170	PIPE	1							
9	3	172527-73180	BOLT M5X16-12.9	3							
10	3	172527-73190	COVER,OIL SEAL	1							
11	3	172527-73210	SEAL, 30427	1							
12	3	172527-73220	WASHER	2							
13	3	172527-73230	BEARING	1							
14	3	172527-73240	SHAFT	1							
15	3	172527-73250	HOLDER	1							
16	3	172527-73260	BEARING	2							
17	3	172527-73270	PLATE	1							
18	3	172527-73280	PISTON	9							
19	3	172527-73290	RETAINER	1							
20	3	172527-73350	BLOCK	1							
21	3	172527-73360	SPRING	1							
22	3	172527-73370	PLATE	1							
23	3	172527-73380	BEARING	1							
24	3	172527-73390	COVER	1							
25	3	172527-73410	SPRING PIN	1							
26	3	172527-73420	BOLT	6							
27	3	172527-73430	COVER	1							
28	4	172527-73580	O-RING	2							
29	3	172527-73440	O-RING	1							
30	3	172527-73450	BOLT	2							
31	3	172527-73460	BOLT	2							
32	3	172527-73470	CUPRING	1							
33	3	172527-73480	VALVE,RELIFE 420K	2							
34	4	172527-73540	O-RING, 121	4							
35	3	172527-73490	VALVE,RELIFE 16K	2							
36	4	172527-73590	O-RING KIT	4							
37	3	172527-73510	BODY	1							
38	4	172527-73880	O-RING KIT	1							
39	3	172527-73520	VALVE	1							
40	4	172527-73650	O-RING 1B P 18	1							
41	4	24311-000060	O-RING, 1AP6.0	1							
42	3	172527-73530	VALVE SET, INCHING	1							
43	4	172527-73890	O-RING KIT	1							
44	3	172527-73570	BOLT SET	1							
45	3	172527-73560	O-RING	2							
46	3	22242-000300	RING, 30	2							
47	3	22252-000350	RING, 35	1							
48	3	22312-060100	PIN, PARALLEL M6X10	1							
49	3	24341-000750	O-RING, 1AS75.0	1							
50	2	172527-73550	BOLT M5X45-12.9	4							
51	2	172527-73600	SOLENOID ASSY	1							

N:Old $\frac{\text{Yes}}{\text{No}}$ New, Q:Old $\frac{\text{No}}{\text{Yes}}$ New, R:Old $\frac{\text{Yes}}{\text{Yes}}$ New, S:Old $\frac{\text{No}}{\text{No}}$ New, W:Add, Z:Discontinued, F:Interchangeable by set, K:Q'ty Change

++ CONTINUE ++

Copyright (C) YANMAR CO., LTD. All RightsReserved.

Fig.48. HST PUMP

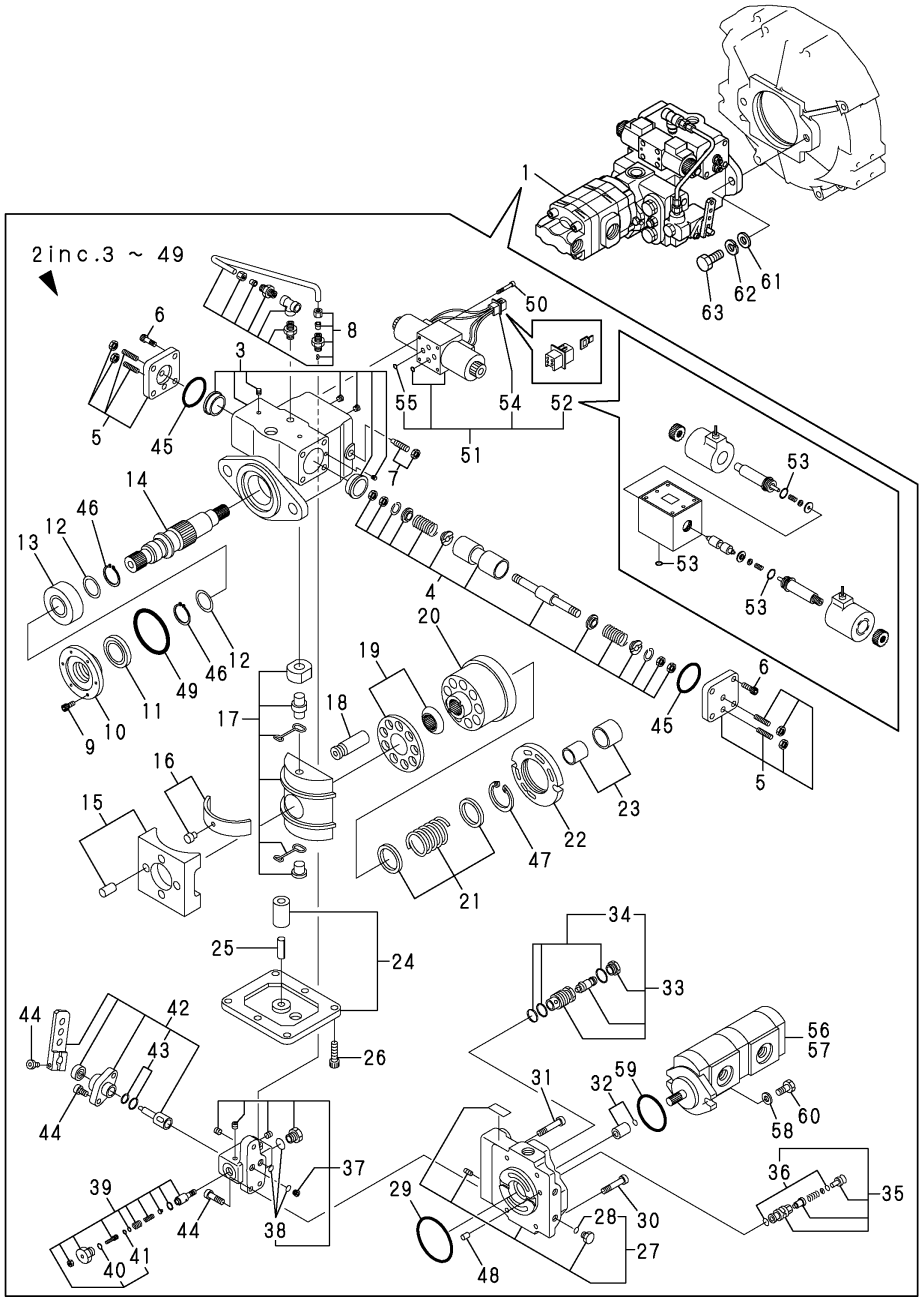

(A)=V3-5A (D)=V5-B
(B)=V3-5B (E)=
(C)=V4-5B (F)=

No.	Lev.	Parts No.	Description	Q'ty (A)	(B)	(C)	(D)	(E)	(F)	I	R
52	3	172527-73610	SOLENOID	1							
53	4	172527-73910	O-RING KIT	1							
54	3	172527-73620	HOUSING	1							
55	3	172527-73630	PLATE	2							
56	2	172527-73640	PUMP 14.3X8.1	1							
57	3	172527-73840	SEAL SET	1							
58	2	22117-100000	WASHER, 10	2							
59	2	24341-000850	O-RING, 1AS85.0	1							
60	2	26076-100252	BOLT, 10.910X 25	2							
61	1	22137-160000	WASHER, 16	2							
62	1	22217-160000	WASHER, SPRING 16	2							
63	1	26156-160402	BOLT, M16X 40 PLATED	2							

N:Old $\xleftarrow[\text{No}]{\text{Yes}}$ New, Q:Old $\xleftarrow[\text{Yes}]{\text{No}}$ New, R:Old $\xleftarrow[\text{Yes}]{\text{Yes}}$ New, S:Old $\xleftarrow[\text{No}]{\text{No}}$ New, W:Add, Z:Discontinued, F:Interchangeable by set, K:Q'ty Change

Copyright (C) YANMAR CO., LTD. All RightsReserved.

Fig.49. HST PUMP

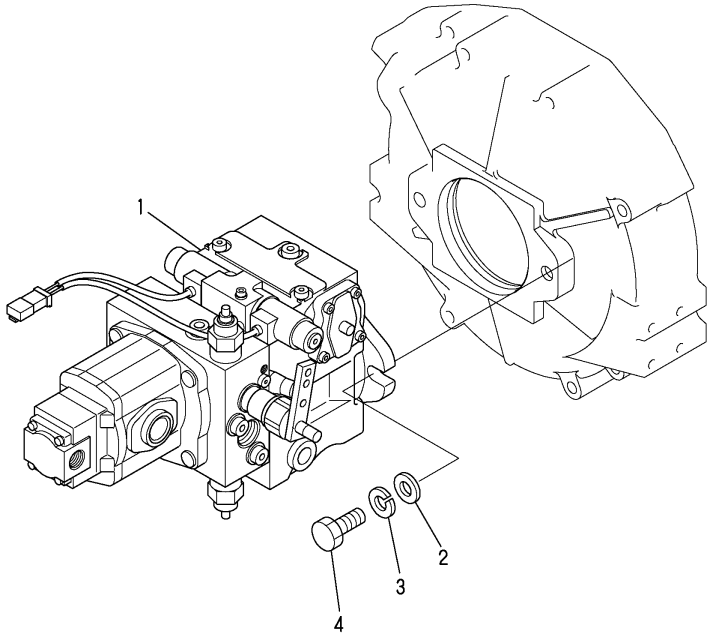

(A)=V3-5A (D)=V5-B
(B)=V3-5B (E)=
(C)=V4-5B (F)=

No.	Lev.	Parts No.	Description	Q'ty (A)	(B)	(C)	(D)	(E)	(F)	I	R
1	1	172534-73100	PUMP ASSY, HST		1						
1A	1	172535-73100	PUMP ASSY, HST			1	1				
2	1	22137-140000	WASHER, 14		2	2	2				
3	1	22217-140000	WASHER, SPRING 14		2	2	2				
4	1	26156-140402	BOLT, M14X 40 PLATED		2	2	2				

N:Old $\xleftrightarrow[\text{No}]{\text{Yes}}$ New, Q:Old $\xleftrightarrow[\text{Yes}]{\text{No}}$ New, R:Old $\xleftrightarrow[\text{Yes}]{\text{Yes}}$ New, S:Old $\xleftrightarrow[\text{No}]{\text{No}}$ New, W:Add, Z:Discontinued, F:Interchangeable by set, K:Q'ty Change

Copyright (C) YANMAR CO., LTD. All RightsReserved.

Fig.70. (49A)HST PUMP(COMPONENT PART)

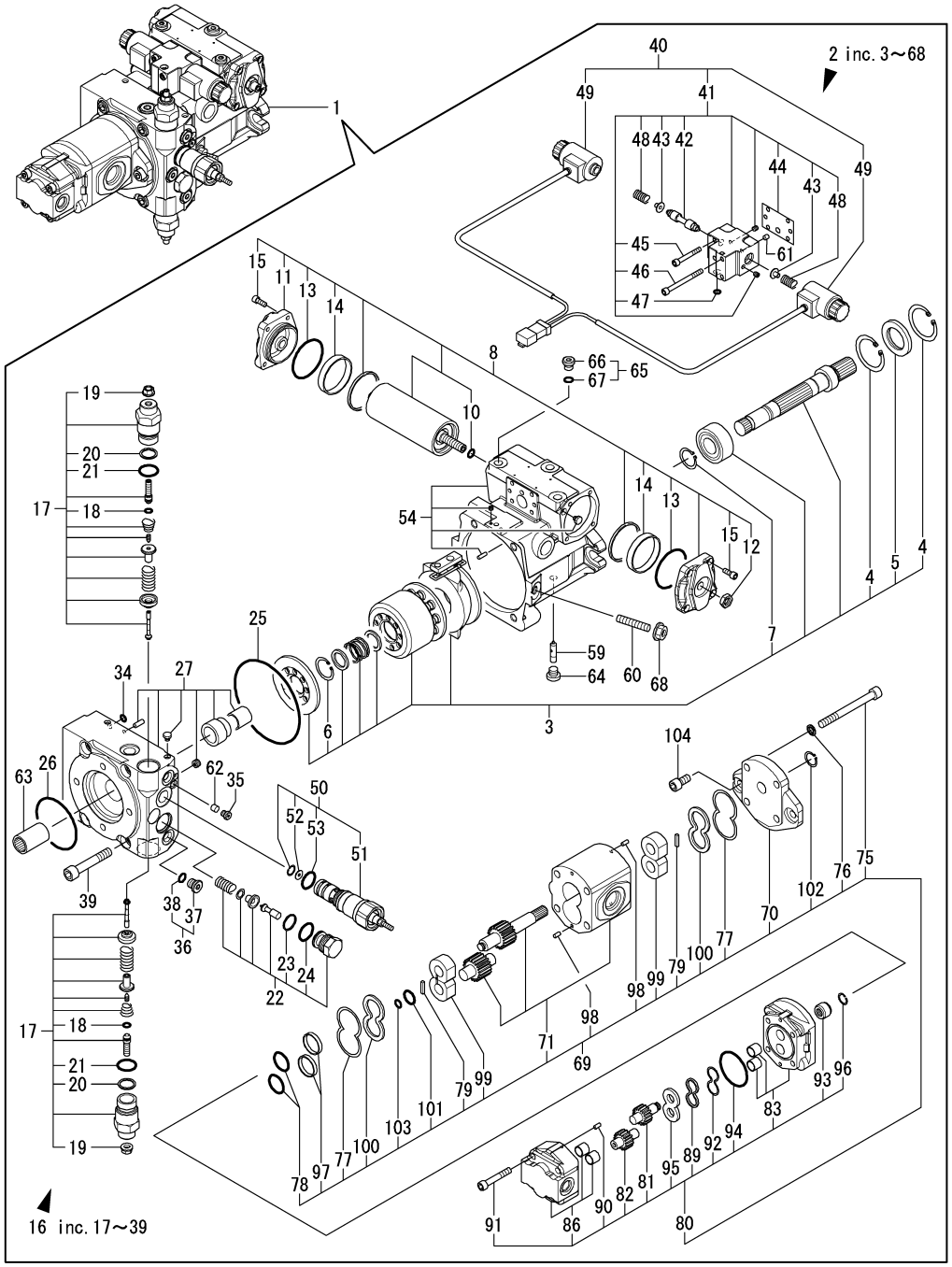

(A)=V3-5A (D)=V5-B
(B)=V3-5B (E)=
(C)=V4-5B (F)=

No.	Lev.	Parts No.	Description	Q'ty (A)	(B)	(C)	(D)	(E)	(F)	I	R
1	1	172534-73100	PUMP ASSY, HST		1						
2	2	172534-73110	PISTON PUMP ASSY		1						
3	3	172653-71310	ROTARY GROUP		1						
4	4	172653-71420	RING,RETANING		2						
5	4	172653-71430	RING,SEAL		1						
6	4	172653-71440	RING,RETANING		1						
7	4	22242-000250	RING, 25		1						
8	3	172653-71320	CONTROL, HYDRAULIC		1						
10	5	172179-73540	O-RING		1						
11	4	172653-71460	COVER		1						
12	4	172653-71470	NUT,M12		1						
13	4	172653-71480	O-RING		2						
14	4	172653-71490	RING,GUIDE		2						
15	4	26450-060162	BOLT, M6X 16		8						
16	3	172534-71330	PORT PLATE ASSY		1						
17	4	172534-71500	RELIEF VALVE		2						
18	5	172534-71510	O-RING, AS 568A		1						
19	5	172482-73490	NUT		1						
20	5	172651-73610	BACK-UP RING		1						
21	5	172650-73640	O-RING, NBR HS90		1						
22	4	172653-71520	VALVE		1						
23	5	172653-71550	PISTON RING		1						
24	5	172650-73640	O-RING, NBR HS90		1						
25	4	172653-71530	O-RING		1						
26	4	172653-71540	O-RING		1						
27	4	172534-71600	PORT PLATE ASSY		1						
34	4	172179-73540	O-RING		1						
35	4	172162-73630	PLUG		1						
36	4	172142-74600	PLUG		2						
37	5	172142-74660	PLUG		1						
38	5	24315-000110	O-RING, 1BP11.0		1						
39	4	26450-120702	BOLT, M12X 70		4						
40	3	172534-71340	CONTROL MODULE ASSY		1						
41	4	172653-71560	HOUSING, VALVE		1						
42	5	172653-71580	PISTON,CONTROL		1						
43	5	172653-71590	COLLAR, SPRING		2						
44	5	172653-71600	GASKET		1						
45	5	172653-71610	BOLT		3						
46	5	172653-71620	BOLT		2						
47	5	172653-71630	O-RING		1						
48	5	172649-72600	SPRING		2						
49	4	172534-71700	SOLENOID, CONTROL		2						
50	3	172534-71350	CONTROL ASSY		1						
51	4	172534-71410	CONTROL, CARTRIDGE		1						
52	4	172534-71420	ORIFICE		1						
53	4	172650-73640	O-RING, NBR HS90		1						
54	3	172534-71360	HOUSING ASSY		1						
59	3	172653-71360	PIN,JOINT		1						
60	3	172534-71380	SCREW		1						
61	3	172534-71390	ORIFICE		1						
62	3	172653-71390	ORIFICE		1						

N:Old $\overset{\text{Yes}}{\underset{\text{No}}{\leftrightarrows}}$ New, Q:Old $\overset{\text{No}}{\underset{\text{Yes}}{\leftrightarrows}}$ New, R:Old $\overset{\text{Yes}}{\underset{\text{Yes}}{\leftrightarrows}}$ New, S:Old $\overset{\text{No}}{\underset{\text{No}}{\leftrightarrows}}$ New, W:Add, Z:Discontinued, F:Interchangeable by set, K:Q'ty Change

++ CONTINUE ++

Copyright (C) YANMAR CO., LTD. All RightsReserved.

Fig.70. (49A)HST PUMP(COMPONENT PART)

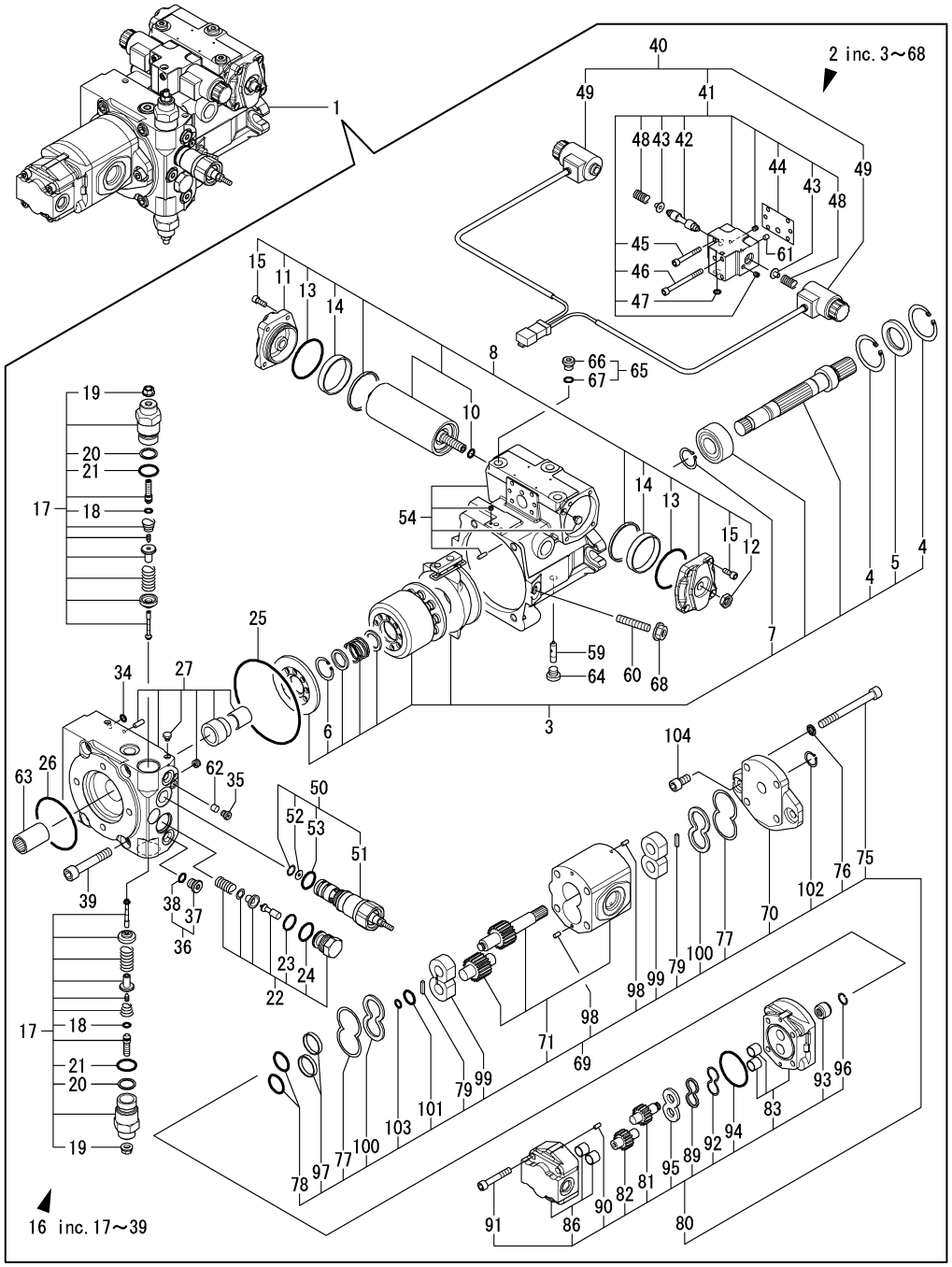

(A)=V3-5A (D)=V5-B
(B)=V3-5B (E)=
(C)=V4-5B (F)=

No.	Lev.	Parts No.	Description	Q'ty (A)	(B)	(C)	(D)	(E)	(F)	I	R
63	3	172653-71410	JOINT		1						
64	3	172649-73680	PLUG		1						
65	3	172142-74600	PLUG		3						
66	4	172142-74660	PLUG		1						
67	4	24315-000110	O-RING, 1BP11.0		1						
68	3	172162-74870	NUT, M10X1		1						
69	2	172534-73120	GEAR PUMP ASSY		1						
70	3	172534-71430	FRAME		1						
71	3	172534-71440	CASE ASSY		1						
75	3	172534-71480	CAP SCREW 10X105		4						
76	3	172534-71490	SEAL, FASTENER		4						
77	3	172141-71520	RING		2						
78	3	172141-71550	O-RING		2						
79	3	172141-71560	RING		2						
80	3	172534-73140	GEAR PUMP		1						
81	4	172534-71540	GEAR, DRIVE		1						
82	4	172534-71550	GEAR, IDLE		1						
83	4	172534-71560	FRAME ASSY		1						
86	4	172534-71570	HOUSING ASSY		1						
89	4	172649-72750	RING		1						
90	4	172141-73240	PIN, PARALLEL		2						
91	4	172651-73730	SOCKET BOLT M 8X 50		4						
92	4	172165-73850	RING, BUCK UP		1						
93	4	172164-73870	COUPLING		1						
94	4	172165-73870	O-RING		1						
95	4	172164-73950	PLATE		1						
96	4	22252-000120	RING, 12		1						
97	3	172141-73230	GUIDE		2						
98	3	172141-73240	PIN, PARALLEL		4						
99	3	172482-73560	THRUST PLATE ASSY		2						
100	3	172482-73570	PLATE		5						
101	3	172164-73880	O-RING, NBR HS70		1						
102	3	22242-000180	RING, 18		1						
103	3	24315-000100	O-RING, 1BP10.0		1						
104	2	172534-73130	BOLT, 10X20HE		2						

N:Old $\xleftarrow[\text{No}]{\text{Yes}}$ New, Q:Old $\xleftarrow[\text{Yes}]{\text{No}}$ New, R:Old $\xleftrightarrow[\text{Yes}]{\text{Yes}}$ New, S:Old $\xleftrightarrow[\text{No}]{\text{No}}$ New, W:Add, Z:Discontinued, F:Interchangeable by set, K:Q'ty Change

Copyright (C) YANMAR CO., LTD. All RightsReserved.

Fig.71. (49B)HST PUMP(COMPONENT PART)

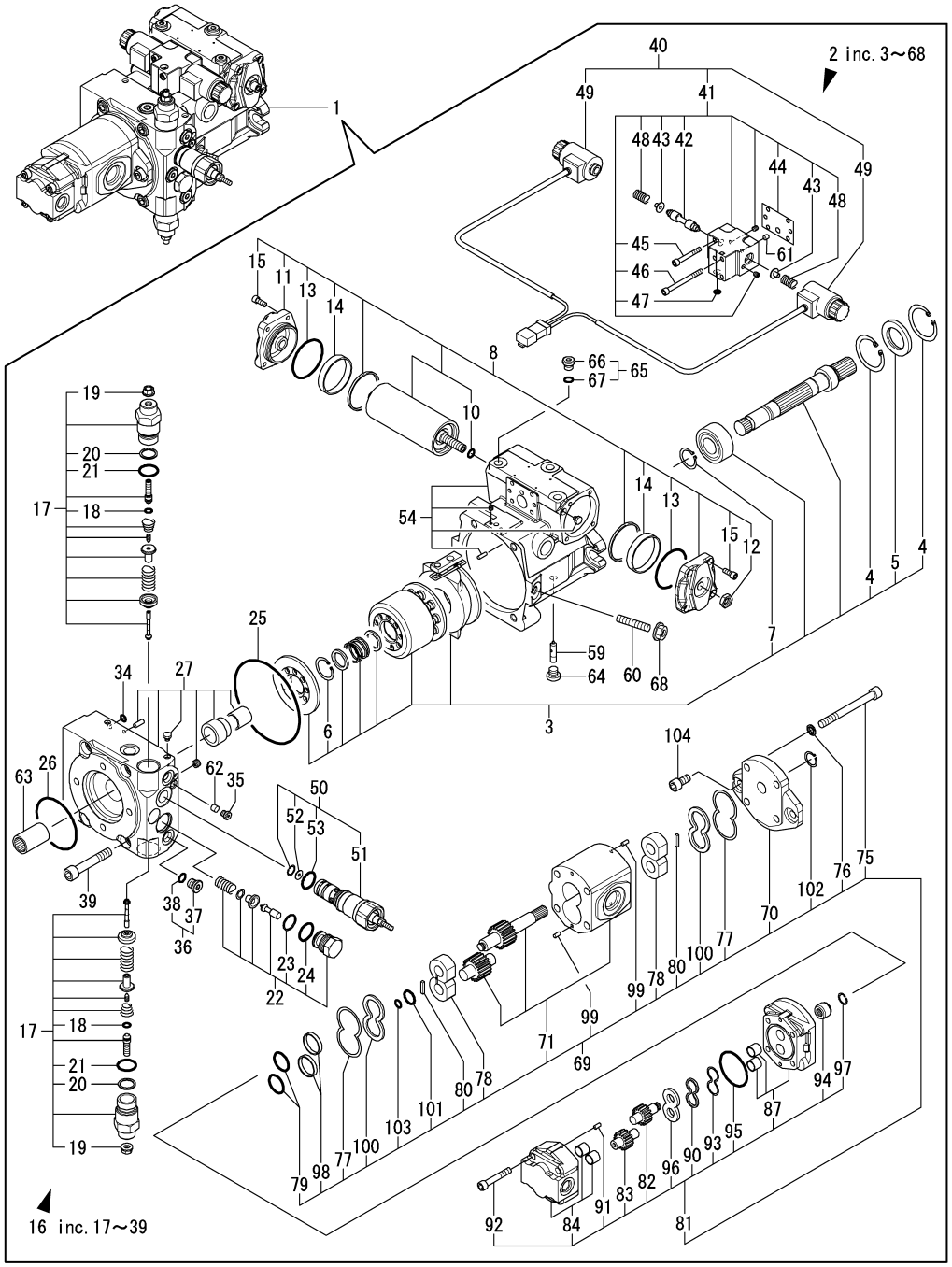

(A)=V3-5A (D)=V5-B
(B)=V3-5B (E)=
(C)=V4-5B (F)=

No.	Lev.	Parts No.	Description	Q'ty (A)	(B)	(C)	(D)	(E)	(F)	I	R
1	1	172535-73100	PUMP ASSY, HST			1	1				
2	2	172535-73110	PISTON PUMP ASSY			1	1				
3	3	172653-71310	ROTARY GROUP			1	1				
4	4	172653-71420	RING,RETANING			2	2				
5	4	172653-71430	RING,SEAL			1	1				
6	4	172653-71440	RING,RETANING			1	1				
7	4	22242-000250	RING, 25			1	1				
8	3	172653-71320	CONTROL, HYDRAULIC			1	1				
10	5	172179-73540	O-RING			1	1				
11	4	172653-71460	COVER			1	1				
12	4	172653-71470	NUT,M12			1	1				
13	4	172653-71480	O-RING			2	2				
14	4	172653-71490	RING,GUIDE			2	2				
15	4	26450-060162	BOLT, M6X 16			8	8				
16	3	172534-71330	PORT PLATE ASSY			1	1				
17	4	172534-71500	RELIEF VALVE			2	2				
18	5	172534-71510	O-RING, AS 568A			1	1				
19	5	172482-73490	NUT			1	1				
20	5	172651-73610	BACK-UP RING			1	1				
21	5	172650-73640	O-RING, NBR HS90			1	1				
22	4	172653-71520	VALVE			1	1				
23	5	172653-71550	PISTON RING			1	1				
24	5	172650-73640	O-RING, NBR HS90			1	1				
25	4	172653-71530	O-RING			1	1				
26	4	172653-71540	O-RING			1	1				
27	4	172534-71600	PORT PLATE ASSY			1	1				
34	4	172179-73540	O-RING			1	1				
35	4	172162-73630	PLUG			1	1				
36	4	172142-74600	PLUG			2	2				
37	5	172142-74660	PLUG			1	1				
38	5	24315-000110	O-RING, 1BP11.0			1	1				
39	4	26450-120702	BOLT, M12X 70			4	4				
40	3	172534-71340	CONTROL MODULE ASSY			1	1				
41	4	172653-71560	HOUSING, VALVE			1	1				
42	5	172653-71580	PISTON,CONTROL			1	1				
43	5	172653-71590	COLLAR, SPRING			2	2				
44	5	172653-71600	GASKET			1	1				
45	5	172653-71610	BOLT			3	3				
46	5	172653-71620	BOLT			2	2				
47	5	172653-71630	O-RING			1	1				
48	5	172649-72600	SPRING			2	2				
49	4	172534-71700	SOLENOID, CONTROL			2	2				
50	3	172535-71350	CONTROL ASSY			1	1				
51	4	172534-71410	CONTROL, CARTRIDGE			1	1				
52	4	172535-71420	ORIFICE			1	1				
53	4	172650-73640	O-RING, NBR HS90			1	1				
54	3	172534-71360	HOUSING ASSY			1	1				
59	3	172653-71360	PIN,JOINT			1	1				
60	3	172534-71380	SCREW			1	1				
61	3	172534-71390	ORIFICE			1	1				
62	3	172653-71390	ORIFICE			1	1				

N:Old $\xleftarrow[\text{No}]{\text{Yes}}$ New, Q:Old $\xleftarrow[\text{Yes}]{\text{No}}$ New, R:Old $\xleftarrow[\text{Yes}]{\text{Yes}}$ New, S:Old $\xleftarrow[\text{No}]{\text{No}}$ New, W:Add, Z:Discontinued, F:Interchangeable by set, K:Q'ty Change

++ CONTINUE ++

Copyright (C) YANMAR CO., LTD. All RightsReserved.

Fig.71. (49B)HST PUMP(COMPONENT PART)

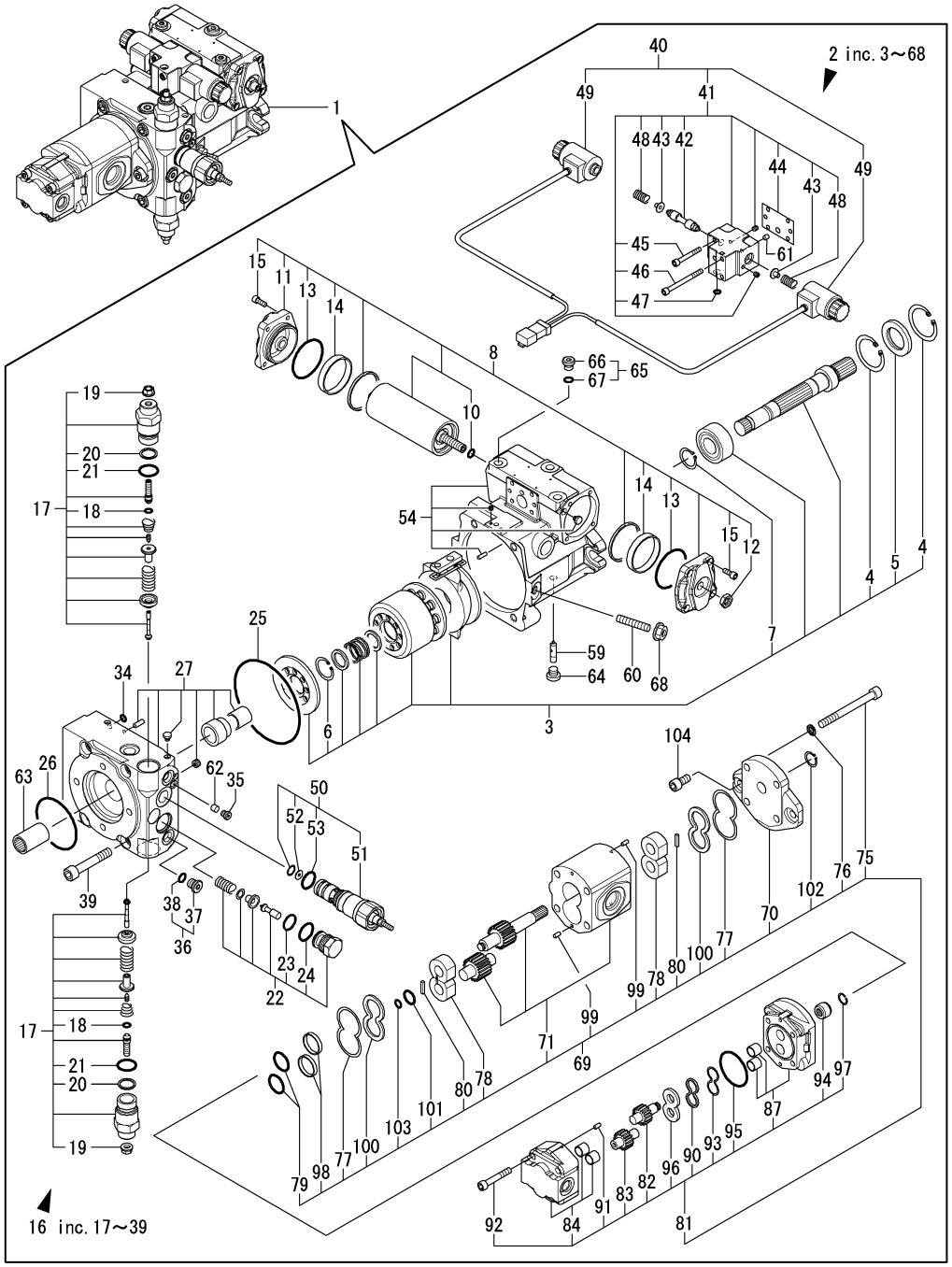

(A)=V3-5A (D)=V5-B
(B)=V3-5B (E)=
(C)=V4-5B (F)=

No.	Lev.	Parts No.	Description	Q'ty (A)	(B)	(C)	(D)	(E)	(F)	I	R
63	3	172653-71410	JOINT			1	1				
64	3	172649-73680	PLUG			1	1				
65	3	172142-74600	PLUG			3	3				
66	4	172142-74660	PLUG			1	1				
67	4	24315-000110	O-RING, 1BP11.0			1	1				
68	3	172162-74870	NUT, M10X1			1	1				
69	2	172535-73120	GEAR PUMP ASSY			1	1				
70	3	172534-71430	FRAME			1	1				
71	3	172535-71440	CASE ASSY			1	1				
75	3	172534-71480	CAP SCREW 10X105			4	4				
76	3	172534-71490	SEAL, FASTENER			4	4				
77	3	172141-71520	RING			2	2				
78	3	172535-71520	SIDE PLATE ASSY			2	2				
79	3	172141-71550	O-RING			2	2				
80	3	172141-71560	RING			2	2				
81	3	172534-73140	GEAR PUMP			1	1				
82	4	172534-71540	GEAR, DRIVE			1	1				
83	4	172534-71550	GEAR, IDLE			1	1				
84	4	172534-71560	FRAME ASSY			1	1				
87	4	172534-71570	HOUSING ASSY			1	1				
90	4	172649-72750	RING			1	1				
91	4	172141-73240	PIN, PARALLEL			2	2				
92	4	172651-73730	SOCKET BOLT M 8X 50			4	4				
93	4	172165-73850	RING, BUCK UP			1	1				
94	4	172164-73870	COUPLING			1	1				
95	4	172165-73870	O-RING			1	1				
96	4	172164-73950	PLATE			1	1				
97	4	22252-000120	RING, 12			1	1				
98	3	172141-73230	GUIDE			2	2				
99	3	172141-73240	PIN, PARALLEL			4	4				
100	3	172482-73570	PLATE			2	2				
101	3	172164-73880	O-RING, NBR HS70			1	1				
102	3	22242-000180	RING, 18			1	1				
103	3	24315-000100	O-RING, 1BP10.0			1	1				
104	2	172534-73130	BOLT, 10X20HE			2	2				

N:Old $\xleftarrow[\text{No}]{\text{Yes}}$ New, Q:Old $\xleftarrow[\text{Yes}]{\text{No}}$ New, R:Old $\xleftarrow[\text{Yes}]{\text{Yes}}$ New, S:Old $\xleftarrow[\text{No}]{\text{No}}$ New, W:Add, Z:Discontinued, F:Interchangeable by set, K:Q'ty Change

Copyright (C) YANMAR CO., LTD. All RightsReserved.

Fig.50. HST MOTOR

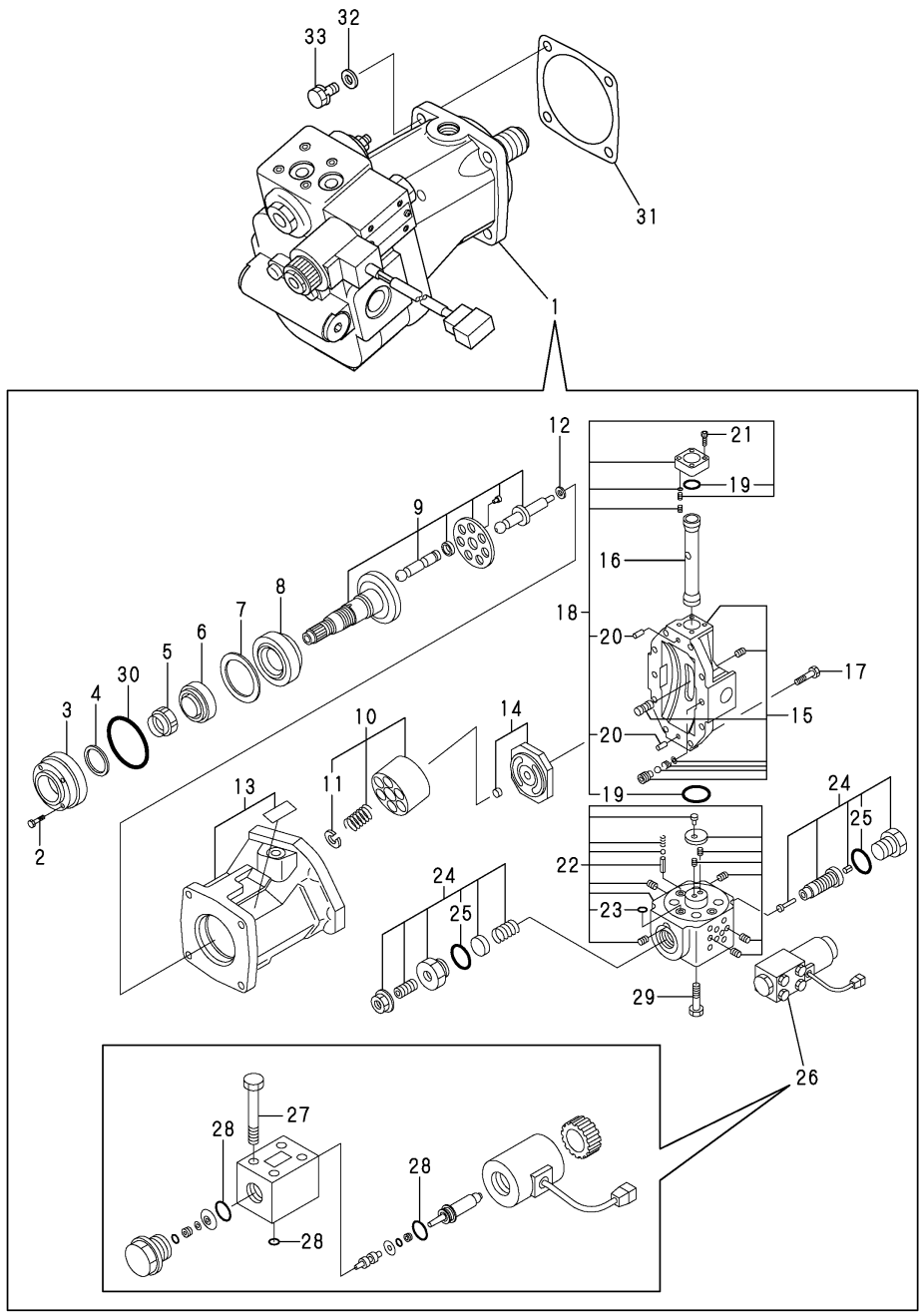

(A)=V3-5A (D)=V5-B
(B)=V3-5B (E)=
(C)=V4-5B (F)=

No.	Lev.	Parts No.	Description	Q'ty (A)	(B)	(C)	(D)	(E)	(F)	I	R
1	1	172527-73300	MOTOR ASSY H.S.T.	1							
2	2	172527-73180	BOLT M5X16-12.9	3							
3	2	172527-73190	COVER,OIL SEAL	1							
4	2	172527-73210	SEAL, 30427	1							
5	2	172527-73320	NUT M35X1	1							
6	2	172527-73330	BEARING	1							
7	2	172527-73340	SHIM SET	1							
8	2	172527-73660	BEARING 4T-30308D	1							
9	2	172527-73670	SHAFT SET	1							
10	2	172527-73680	CYLINDER BLOCK	1							
11	3	22252-000250	RING, 25	2							
12	2	172527-73690	SHIM SET	1							
13	2	172527-73710	HOUSING	1							
14	2	172527-73720	PORT PLATE SET	1							
15	2	172527-73730	COVER SET	1							
16	2	172527-73740	PISTON 0.25	1							
17	2	172527-73750	BOLT M8X30-12.9	8							
18	2	172527-73760	COVER SET	1							
19	3	172527-73920	O-RING KIT	1							
20	3	22312-060100	PIN, PARALLEL M6X10	2							
21	2	172527-73770	BOLT M6X30-12.9	4							
22	2	172527-73780	BODY SET	1							
23	3	172527-73940	O-RING	4							
24	2	172527-73790	SPOOL SET	1							
25	3	172527-73650	O-RING 1B P 18	2							
26	2	172527-73800	SOLENOID VALVE ASSY	1							
27	3	172527-73550	BOLT M5X45-12.9	4							
28	3	172527-73960	O-RING KIT	1							
29	2	172527-73810	BOLT M6X60X12.9	4							
30	2	24341-000750	O-RING, 1AS75.0	1							
31	1	172527-73310	GASKET, MOTOR	1							
32	1	22137-100000	WASHER, 10	4							
33	1	26013-100302	BOLT, M10X 30	4							

N:Old ◄Yes/No► New, Q:Old ◄No/Yes► New, R:Old ◄Yes/Yes► New, S:Old ◄No/No► New, W:Add, Z:Discontinued, F:Interchangeable by set, K:Q'ty Change

Copyright (C) YANMAR CO., LTD. All RightsReserved.

Fig.51. HST MOTOR

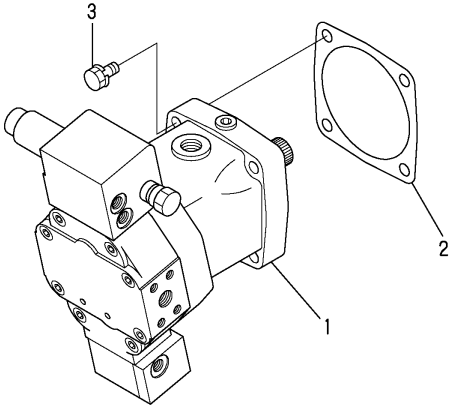

(A)=V3-5A (D)=V5-B
(B)=V3-5B (E)=
(C)=V4-5B (F)=

No.	Lev.	Parts No.	Description	Q'ty (A)	(B)	(C)	(D)	(E)	(F)	I	R
1	1	172534-73300	MOTOR ASSY, HST		1						
1A	1	172535-73300	MOTOR ASSY, HST			1	1				
2	1	172534-73310	GASKET, MOTOR		1	1	1				
3	1	26013-120402	BOLT, M12X 40		4	4	4				

N:Old $\xleftrightarrow[\text{No}]{\text{Yes}}$ New, Q:Old $\xleftrightarrow[\text{Yes}]{\text{No}}$ New, R:Old $\xleftrightarrow[\text{Yes}]{\text{Yes}}$ New, S:Old $\xleftrightarrow[\text{No}]{\text{No}}$ New, W:Add, Z:Discontinued, F:Interchangeable by set, K:Q'ty Change

Copyright (C) YANMAR CO., LTD. All RightsReserved.

Fig.72. (51A)HST MOTOR(COMPONENT PART)

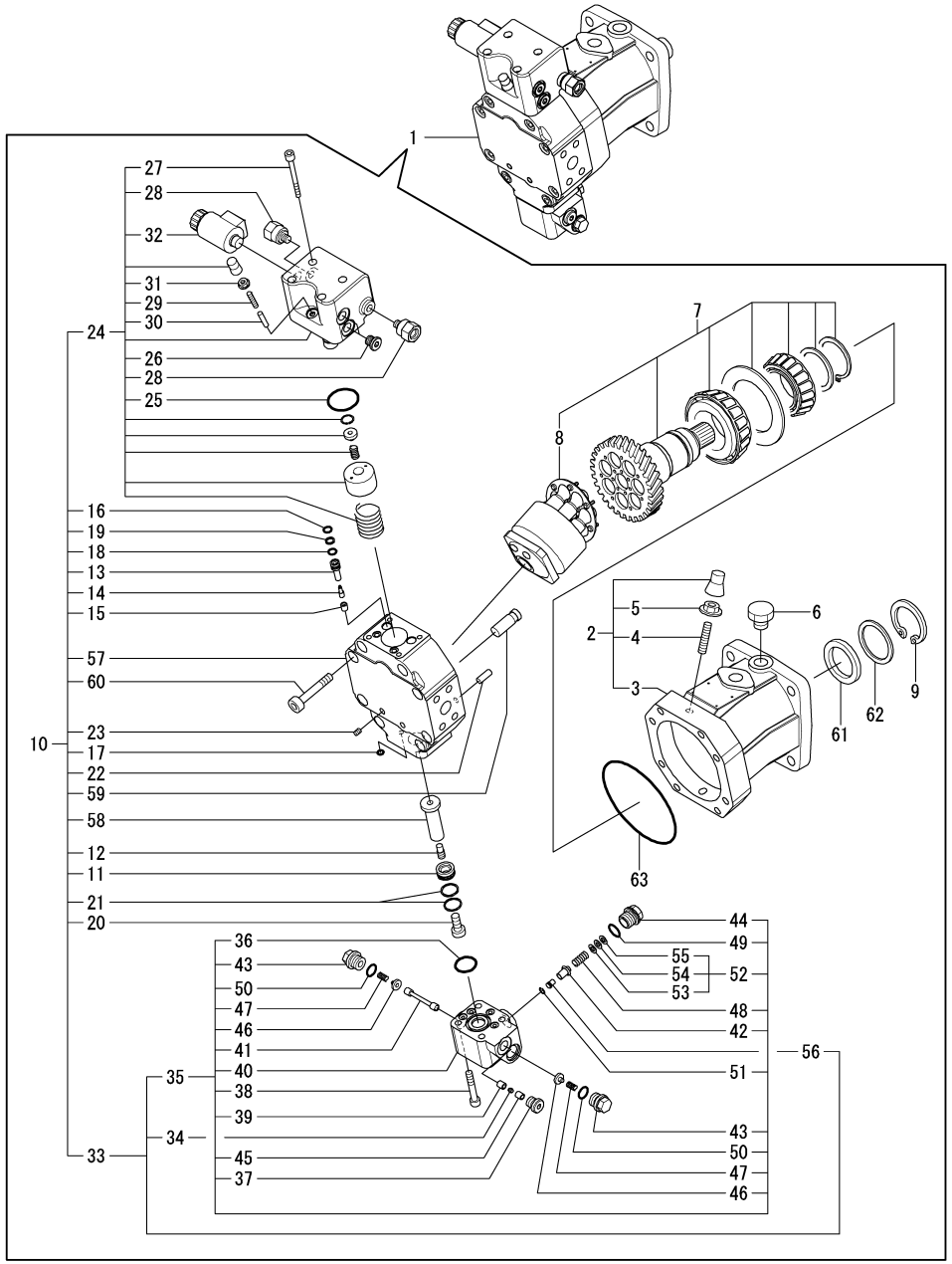

(A)=V3-5A (D)=V5-B
(B)=V3-5B (E)=
(C)=V4-5B (F)=

No.	Lev.	Parts No.	Description	Q'ty (A)	(B)	(C)	(D)	(E)	(F)	I	R
1	1	172534-73300	MOTOR ASSY, HST		1						
2	2	172534-73320	HOUSING ASSY		1						
3	3	172534-73610	HOUSING		1						
4	3	172534-73620	THREADED PIN		2						
5	3	172534-73630	NUT, SEAL LOCK		2						
6	2	172653-73320	PLUG ASSY		1						
7	2	172534-73330	ROTARY GROUP		1						
8	3	172534-73640	CYLINDER BLOCK ASSY		1						
9	2	172653-73330	RING,62		1						
10	2	172534-73340	CONTROL		1						
11	3	172653-73390	PISTON		1						
12	3	172653-73400	PIN,THREAD		1						
13	3	172653-73410	GUIDE,VALVE		2						
14	3	172653-73420	POPPET		2						
15	3	172653-73430	SEAT,VALVE		2						
16	3	172653-73440	O-RING		2						
17	3	172653-73450	O-RING		6						
18	3	172653-73460	O-RING		2						
19	3	172653-73470	RING,BACKUP		2						
20	3	172653-73480	BOLT,10X25		1						
21	3	172653-73490	RING,PISTON		3						
22	3	172653-73500	PIN, 8H6X16		2						
23	3	172164-73650	PLUG		1						
24	3	172534-73650	PARTS, CONTROL		1						
25	4	172653-73530	O-RING		1						
26	4	172653-73580	PLUG ASSY		2						
27	4	172650-73690	SOCKET BOLT M 6X 70		4						
28	4	172534-73700	BUSHING ASSY		1						
29	4	172534-73710	SCREW, M6X30		1						
30	4	172534-73720	CYLINDER PIN		1						
31	4	172534-73730	NUT, SEAL LOCK		1						
32	4	172534-73740	SOLENOID, CONTROL		1						
33	3	172534-73660	FLUSH & BOOST VALVE		1						
34	4	172653-73550	ORIFICE		1						
35	4	172534-73750	FLUSH & BOOST VALVE		1						
36	5	172653-73570	O-RING		1						
37	5	172653-73580	PLUG ASSY		1						
38	5	172651-73730	SOCKET BOLT M 8X 50		4						
39	5	172649-73740	GUIDE		1						
40	5	172534-73770	HOUSING, VALVE		1						
41	5	172534-73780	PISTON,FLUSHING		1						
42	5	172534-73790	PLUNGER		1						
43	5	172534-73800	PLUG		2						
44	5	172534-73810	PLUG		1						
45	5	172649-73810	GUIDE		1						
46	5	172534-73820	SEAT, SPRING		2						
47	5	172534-73830	SPRING		2						
48	5	172534-73840	SPRING		1						
49	5	172534-73850	O-RING		1						
50	5	172534-73860	O-RING		2						
51	5	172534-73870	CIRCLIP		1						

Remarks
(1)SELECTION USE PARTS

N:Old $\xleftarrow[\text{No}]{\text{Yes}}$ New, Q:Old $\xleftarrow[\text{Yes}]{\text{No}}$ New, R:Old $\xleftarrow[\text{Yes}]{\text{Yes}}$ New, S:Old $\xleftarrow[\text{No}]{\text{No}}$ New, W:Add, Z:Discontinued, F:Interchangeable by set, K:Q'ty Change

++ CONTINUE ++

Copyright (C) YANMAR CO., LTD. All RightsReserved.

Fig.72. (51A)HST MOTOR(COMPONENT PART)

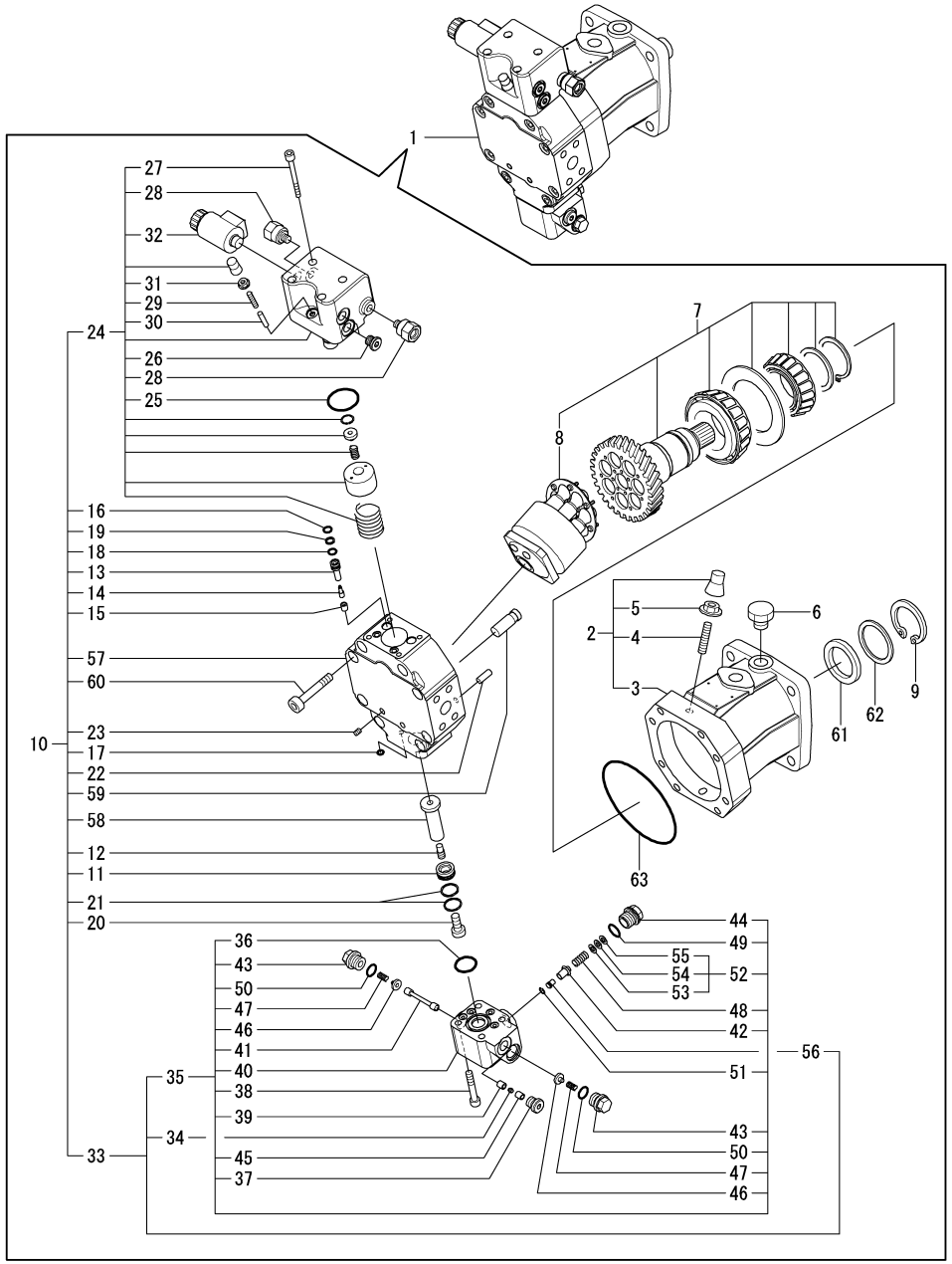

(A)=V3-5A (D)=V5-B
(B)=V3-5B (E)=
(C)=V4-5B (F)=

No.	Lev.	Parts No.	Description	Q'ty (A)	(B)	(C)	(D)	(E)	(F)	I	R
52	5	172534-73900	SHIM SET		1						
53	6	172534-73880	SHIM		1						1
54	6	172534-73890	SHIM		1						1
55	6	172534-73910	SHIM		1						1
56	4	172534-73760	ORIFICE		1						
57	3	172534-73670	PORT PLATE		1						
58	3	172534-73680	POSITIONING PISTON		1						
59	3	172534-73690	POSITIONING TRANNION		1						
60	3	172650-73870	SOCKET BOLT M10X 60		8						
61	2	172653-73340	SEAL, OIL		1						
62	2	172653-73350	SHIM		1						
63	2	172653-73360	O-RING		1						

Remarks
(1)SELECTION USE PARTS

N:Old $\xleftarrow[\text{No}]{\text{Yes}}$ New, Q:Old $\xleftarrow[\text{Yes}]{\text{No}}$ New, R:Old $\xleftarrow[\text{Yes}]{\text{Yes}}$ New, S:Old $\xleftarrow[\text{No}]{\text{No}}$ New, W:Add, Z:Discontinued, F:Interchangeable by set, K:Q'ty Change

Copyright (C) YANMAR CO., LTD. All RightsReserved.

Fig.73. (51B)HST MOTOR(COMPONENT PART)

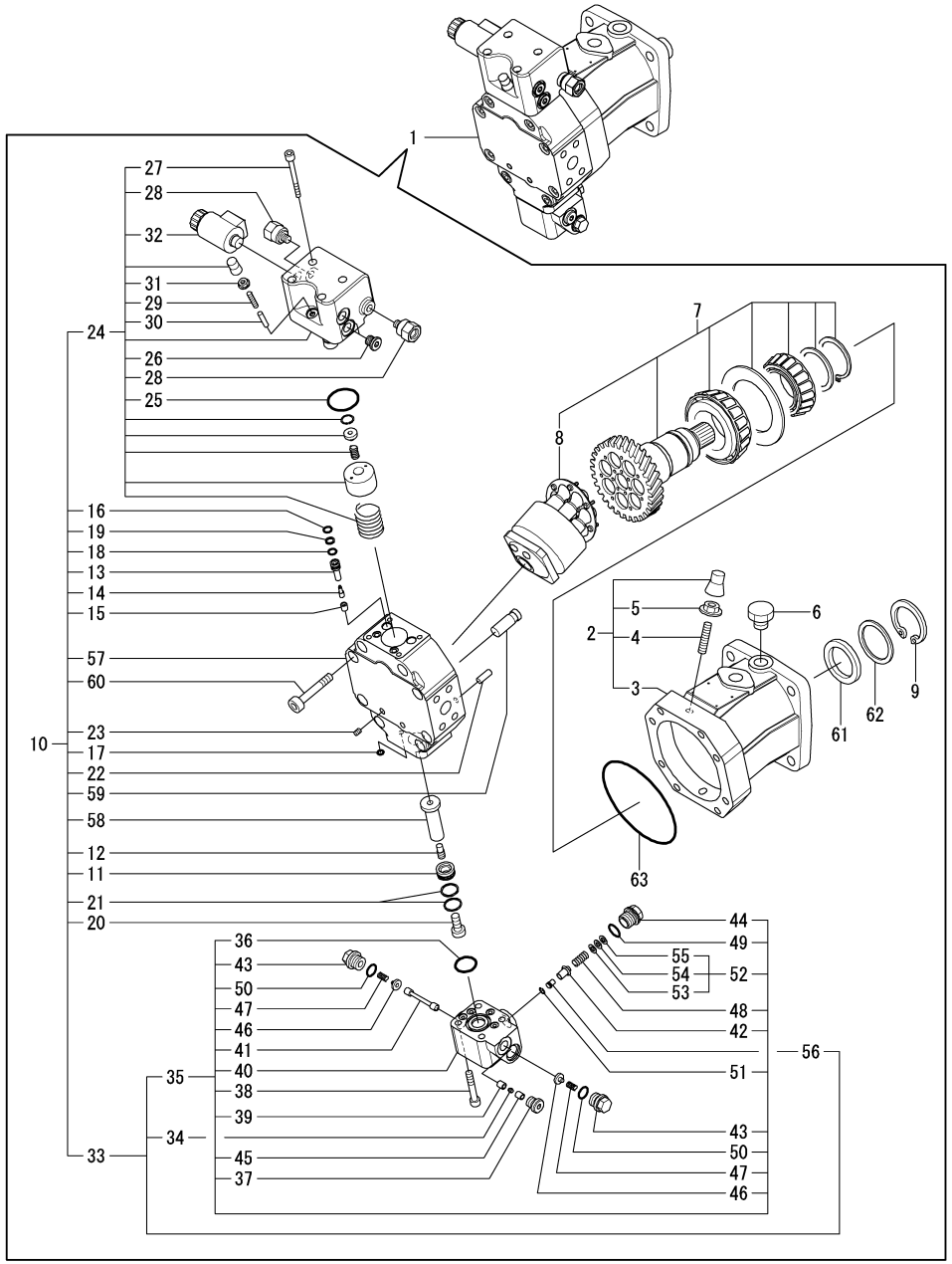

(A)=V3-5A (D)=V5-B
(B)=V3-5B (E)=
(C)=V4-5B (F)=

No.	Lev.	Parts No.	Description	Q'ty (A)	(B)	(C)	(D)	(E)	(F)	I	R
1	1	172535-73300	MOTOR ASSY, HST			1	1				
2	2	172534-73320	HOUSING ASSY			1	1				
3	3	172534-73610	HOUSING			1	1				
4	3	172534-73620	THREADED PIN			2	2				
5	3	172534-73630	NUT, SEAL LOCK			2	2				
6	2	172653-73320	PLUG ASSY			1	1				
7	2	172534-73330	ROTARY GROUP			1	1				
8	3	172534-73640	CYLINDER BLOCK ASSY			1	1				
9	2	172653-73330	RING,62			1	1				
10	2	172534-73340	CONTROL			1	1				
11	3	172653-73390	PISTON			1	1				
12	3	172653-73400	PIN,THREAD			1	1				
13	3	172653-73410	GUIDE,VALVE			2	2				
14	3	172653-73420	POPPET			2	2				
15	3	172653-73430	SEAT,VALVE			2	2				
16	3	172653-73440	O-RING			2	2				
17	3	172653-73450	O-RING			6	6				
18	3	172653-73460	O-RING			2	2				
19	3	172653-73470	RING,BACKUP			2	2				
20	3	172653-73480	BOLT,10X25			1	1				
21	3	172653-73490	RING,PISTON			3	3				
22	3	172653-73500	PIN, 8H6X16			2	2				
23	3	172164-73650	PLUG			1	1				
24	3	172534-73650	PARTS, CONTROL			1	1				
25	4	172653-73530	O-RING			1	1				
26	4	172653-73580	PLUG ASSY			2	2				
27	4	172650-73690	SOCKET BOLT M 6X 70			4	4				
28	4	172534-73700	BUSHING ASSY			1	1				
29	4	172534-73710	SCREW, M6X30			1	1				
30	4	172534-73720	CYLINDER PIN			1	1				
31	4	172534-73730	NUT, SEAL LOCK			1	1				
32	4	172534-73740	SOLENOID, CONTROL			1	1				
33	3	172534-73660	FLUSH & BOOST VALVE			1	1				
34	4	172653-73550	ORIFICE			1	1				
35	4	172534-73750	FLUSH & BOOST VALVE			1	1				
36	5	172653-73570	O-RING			1	1				
37	5	172653-73580	PLUG ASSY			1	1				
38	5	172651-73730	SOCKET BOLT M 8X 50			4	4				
39	5	172649-73740	GUIDE			1	1				
40	5	172534-73770	HOUSING, VALVE			1	1				
41	5	172534-73780	PISTON,FLUSHING			1	1				
42	5	172534-73790	PLUNGER			1	1				
43	5	172534-73800	PLUG			2	2				
44	5	172534-73810	PLUG			1	1				
45	5	172649-73810	GUIDE			1	1				
46	5	172534-73820	SEAT, SPRING			2	2				
47	5	172534-73830	SPRING			2	2				
48	5	172534-73840	SPRING			1	1				
49	5	172534-73850	O-RING			1	1				
50	5	172534-73860	O-RING			2	2				
51	5	172534-73870	CIRCLIP			1	1				

Remarks
(1)SELECTION USE PARTS

N:Old $\overset{\text{Yes}}{\underset{\text{No}}{\leftrightarrow}}$ New, Q:Old $\overset{\text{No}}{\underset{\text{Yes}}{\leftrightarrow}}$ New, R:Old $\overset{\text{Yes}}{\underset{\text{Yes}}{\leftrightarrow}}$ New, S:Old $\overset{\text{No}}{\underset{\text{No}}{\leftrightarrow}}$ New, W:Add, Z:Discontinued, F:Interchangeable by set, K:Q'ty Change

++ CONTINUE ++

Copyright (C) YANMAR CO., LTD. All RightsReserved.

Fig.73. (51B)HST MOTOR(COMPONENT PART)

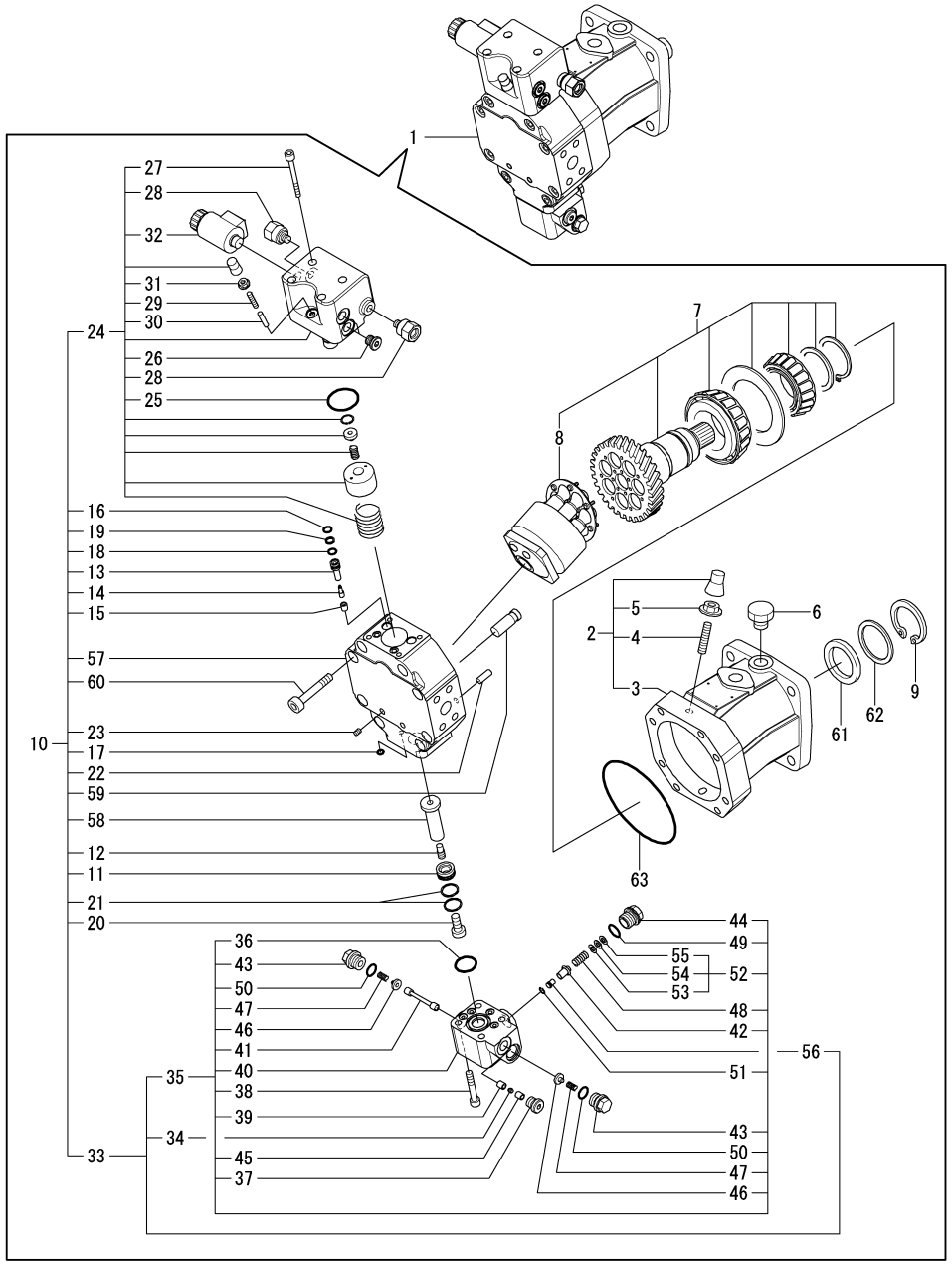

(A)=V3-5A (D)=V5-B
(B)=V3-5B (E)=
(C)=V4-5B (F)=

No.	Lev.	Parts No.	Description	Q'ty (A)	(B)	(C)	(D)	(E)	(F)	I	R
52	5	172534-73900	SHIM SET			1	1				
53	6	172534-73880	SHIM			1	1				1
54	6	172534-73890	SHIM			1	1				1
55	6	172534-73910	SHIM			1	1				1
56	4	172534-73760	ORIFICE			1	1				
57	3	172534-73670	PORT PLATE			1	1				
58	3	172534-73680	POSITIONING PISTON			1	1				
59	3	172534-73690	POSITIONING TRANNION			1	1				
60	3	172650-73870	SOCKET BOLT M10X 60			8	8				
61	2	172653-73340	SEAL, OIL			1	1				
62	2	172653-73350	SHIM			1	1				
63	2	172653-73360	O-RING			1	1				

Remarks
(1)SELECTION USE PARTS

N:Old $\xleftrightarrow[\text{No}]{\text{Yes}}$ New, Q:Old $\xleftrightarrow[\text{Yes}]{\text{No}}$ New, R:Old $\xleftrightarrow[\text{Yes}]{\text{Yes}}$ New, S:Old $\xleftrightarrow[\text{No}]{\text{No}}$ New, W:Add, Z:Discontinued, F:Interchangeable by set, K:Q'ty Change

Copyright (C) YANMAR CO., LTD. All RightsReserved.

Fig.52. STEERING UNIT

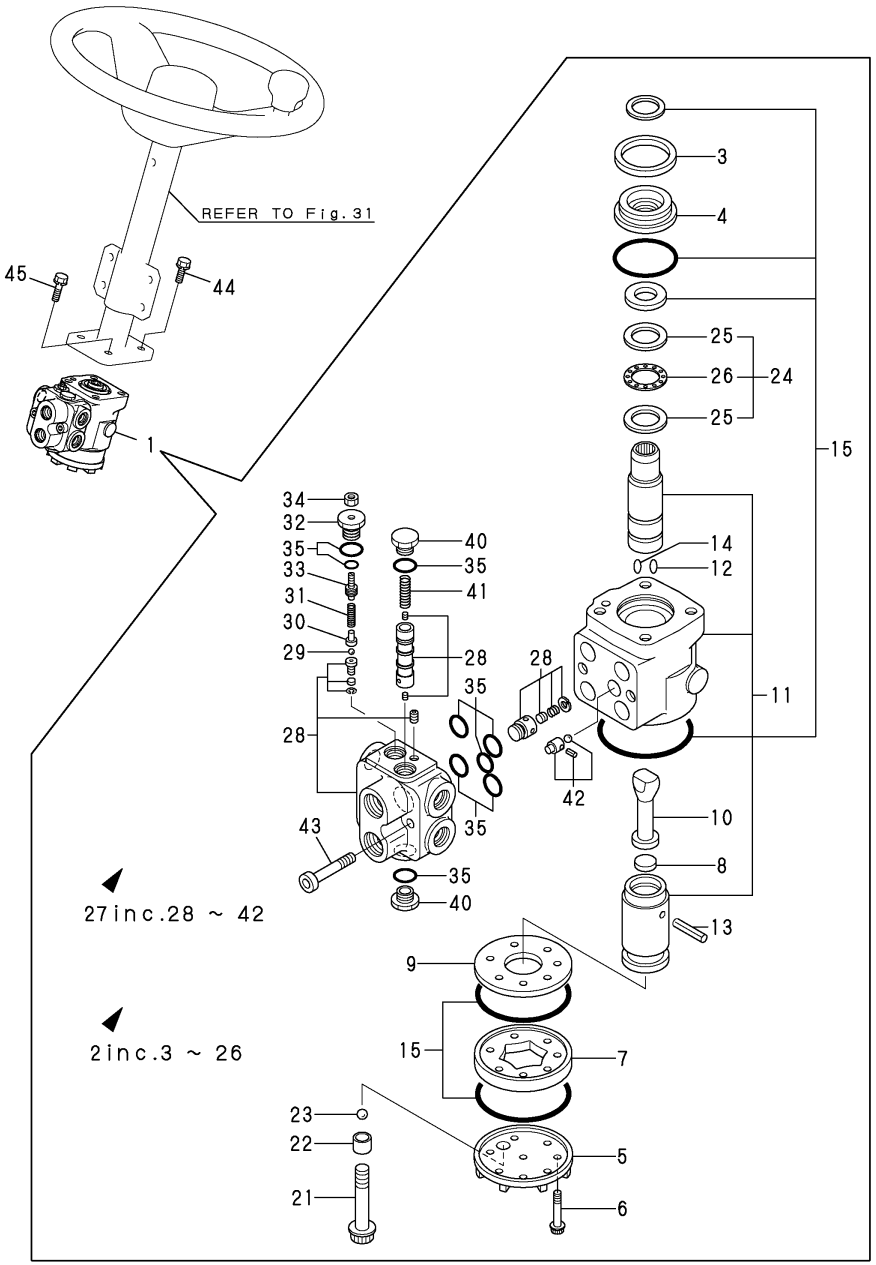

(A)=V3-5A (D)=V5-B
(B)=V3-5B (E)=
(C)=V4-5B (F)=

No.	Lev.	Parts No.	Description	Q'ty (A)	(B)	(C)	(D)	(E)	(F)	I	R
1	1	172524-73512	STEERING ASSY	1	1	1	1				
2	2	172524-73522	ROLL ASSY, ORBITAL	1	1	1	1				
3	3	172312-73110	RETAINING RING	1	1	1	1				
4	3	172524-73530	BUSH,SEAL GLAND	1	1	1	1				
5	3	172312-73520	CAP, END	1	1	1	1				
6	3	172520-73530	SCREW	6	6	6	6				
7	3	172520-73540	GEROTOR	1	1	1	1				
8	3	172524-73550	SPACER	1	1	1	1				
9	3	172312-73560	PLATE, SPACER	1	1	1	1				
10	3	172520-73560	DRIVE	1	1	1	1				
11	3	172524-73571	PARTS SET, CONTROL	1	1	1	1				
12	3	172519-73590	SPRING, CENTERING	2	2	2	2				
13	3	172519-73610	PIN	1	1	1	1				
14	3	172524-73650	SPRING	2	2	2	2				
15	3	172524-73582	SEAL SET	1	1	1	1				
21	3	172524-73540	SCREW, RETAINER	1	1	1	1				
22	3	172524-73780	SCREW, ADAPTER	1	1	1	1				
23	3	172524-73790	BALL	1	1	1	1				
24	3	172524-73640	BEARING SET, NEEDLE	1	1	1	1				
25	4	172312-73660	RACE BEARING	2	2	2	2				
26	4	172312-73670	NEEDLE, THRUST	1	1	1	1				
27	2	172524-73610	VALVE COMPL.	1	1	1	1				
28	3	172524-73620	HOUSING ASSY	1	1	1	1				
29	3	172520-73630	BALL	1	1	1	1				
30	3	172520-73640	GUIDE, BALL	1	1	1	1				
31	3	172520-73650	SPRING, RELIEF	1	1	1	1				
32	3	172520-73660	PLUG, RELIEF	1	1	1	1				
33	3	172520-73670	SCREW, ADJUST	1	1	1	1				
34	3	172520-73680	NUT, LOCK	1	1	1	1				
35	3	172524-73590	SEAL SET	1	1	1	1				
40	3	172520-73740	PLUG, SPOOL	2	2	2	2				
41	3	172524-73750	SPRING, CONTROL	1	1	1	1				
42	3	172520-73770	ORIFICE SET	1	1	1	1				
43	2	26450-100502	BOLT, M10X 50	2	2	2	2				
44	1	26013-100352	BOLT, M10X 35	2	2	2	2				
45	1	26013-100302	BOLT, M10X 30	2	2	2	2				

N:Old $\overset{\text{Yes}}{\underset{\text{No}}{\leftrightarrow}}$ New, Q:Old $\overset{\text{No}}{\underset{\text{Yes}}{\leftrightarrow}}$ New, R:Old $\overset{\text{Yes}}{\underset{\text{Yes}}{\leftrightarrow}}$ New, S:Old $\overset{\text{No}}{\underset{\text{No}}{\leftrightarrow}}$ New, W:Add, Z:Discontinued, F:Interchangeable by set, K:Q'ty Change

Copyright (C) YANMAR CO., LTD. All RightsReserved.

Fig.53. CONTROL VALVE(2-WAY)

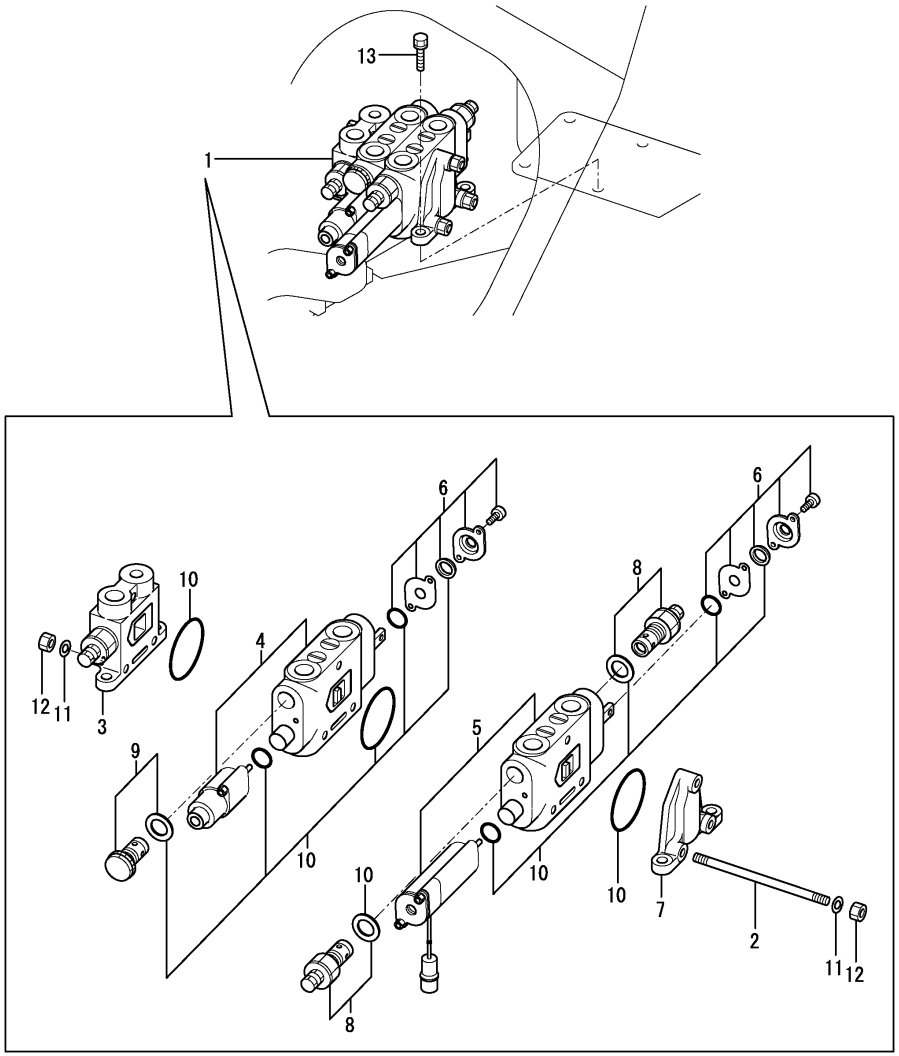

(A)=V3-5A (D)=V5-B
(B)=V3-5B (E)=
(C)=V4-5B (F)=

No.	Lev.	Parts No.	Description	Q'ty (A)	(B)	(C)	(D)	(E)	(F)	I	R
1	1	172527-74110	VALVE, CONTROL	1	1						
1A	1	172528-74110	VALVE, CONTROL			1	1				
2	2	172527-74120	ROD, TIE	3	3	3	3				
3	2	172527-74130	COVER ASSY, INLET	1	1	1	1				
4	2	172527-74140	F BLOCK ASSY	1	1	1	1				
5	2	172527-74150	ED BLOCK ASSY	1	1	1	1				
6	2	172527-74160	L BLOCK ASSY	2	2	2	2				
7	2	172527-74170	CONER, END	1	1	1	1				
8	2	172527-74180	VALVE, O.L.R.	2	2	2	2				
9	2	172527-74190	VALVE, SUC.	1	1	1	1				
10	2	172527-74210	SEAL SET	1	1	1	1				
11	2	22217-100000	WASHER, SPRING 10	6	6	6	6				
12	2	26716-100002	NUT, M10	6	6	6	6				
13	1	26013-100352	BOLT, M10X 35	4	4	4	4				

N:Old $\frac{\text{Yes}}{\text{No}}$ New, Q:Old $\frac{\text{No}}{\text{Yes}}$ New, R:Old $\frac{\text{Yes}}{\text{Yes}}$ New, S:Old $\frac{\text{No}}{\text{No}}$ New, W:Add, Z:Discontinued, F:Interchangeable by set, K:Q'ty Change

Copyright (C) YANMAR CO., LTD. All RightsReserved.

Fig.54. CONTROL VALVE(3-WAY)

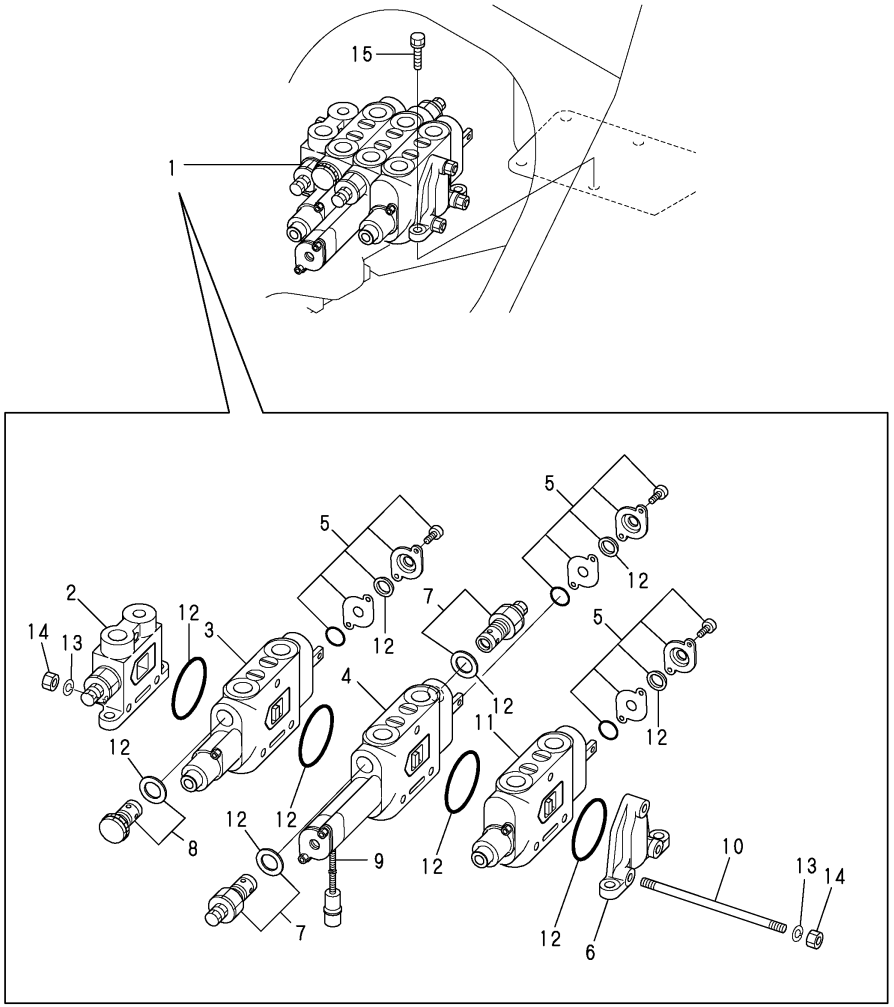

(A)=V3-5A (D)=V5-B
(B)=V3-5B (E)=
(C)=V4-5B (F)=

No.	Lev.	Parts No.	Description	Q'ty (A)	(B)	(C)	(D)	(E)	(F)	I	R
1	1	172527-74400	VALVE 3-WAY	1	1						
1A	1	172528-74400	VALVE 3-WAY			1	1				
2	2	172527-74130	COVER ASSY, INLET	1	1	1	1				
3	2	172527-74140	F BLOCK ASSY	1	1						
3A	2	172528-74140	F BLOCK ASSY			1	1				
4	2	172527-74150	ED BLOCK ASSY	1	1						
4A	2	172528-74150	ED BLOCK ASSY			1	1				
5	2	172527-74160	L BLOCK ASSY	3	3	3	3				
6	2	172527-74170	CONER, END	1	1	1	1				
7	2	172527-74180	VALVE, O.L.R.	2	2	2	2				
8	2	172527-74190	VALVE, SUC.	1	1	1	1				
9	2	172527-74220	TUBE, CORRUGATED	1	1	1	1				
10	2	172527-74410	ROD, TIE	3	3	3	3				
11	2	172527-74420	DM BLOCK ASSY	1	1	1	1				
12	2	172527-74430	SEAL SET	1	1	1	1				
13	2	22217-100000	WASHER, SPRING 10	6	6	6	6				
14	2	26716-100002	NUT, M10	6	6	6	6				
15	1	26013-100352	BOLT, M10X 35	4	4	4	4				

N:Old $\frac{\text{Yes}}{\text{No}}$ New, Q:Old $\frac{\text{No}}{\text{Yes}}$ New, R:Old $\frac{\text{Yes}}{\text{Yes}}$ New, S:Old $\frac{\text{No}}{\text{No}}$ New, W:Add, Z:Discontinued, F:Interchangeable by set, K:Q'ty Change

Copyright (C) YANMAR CO., LTD. All RightsReserved.

Fig.55. HYD.OIL TANK

P/C NEWS No:Y00K3961-2
PUBLISHED:2007/3

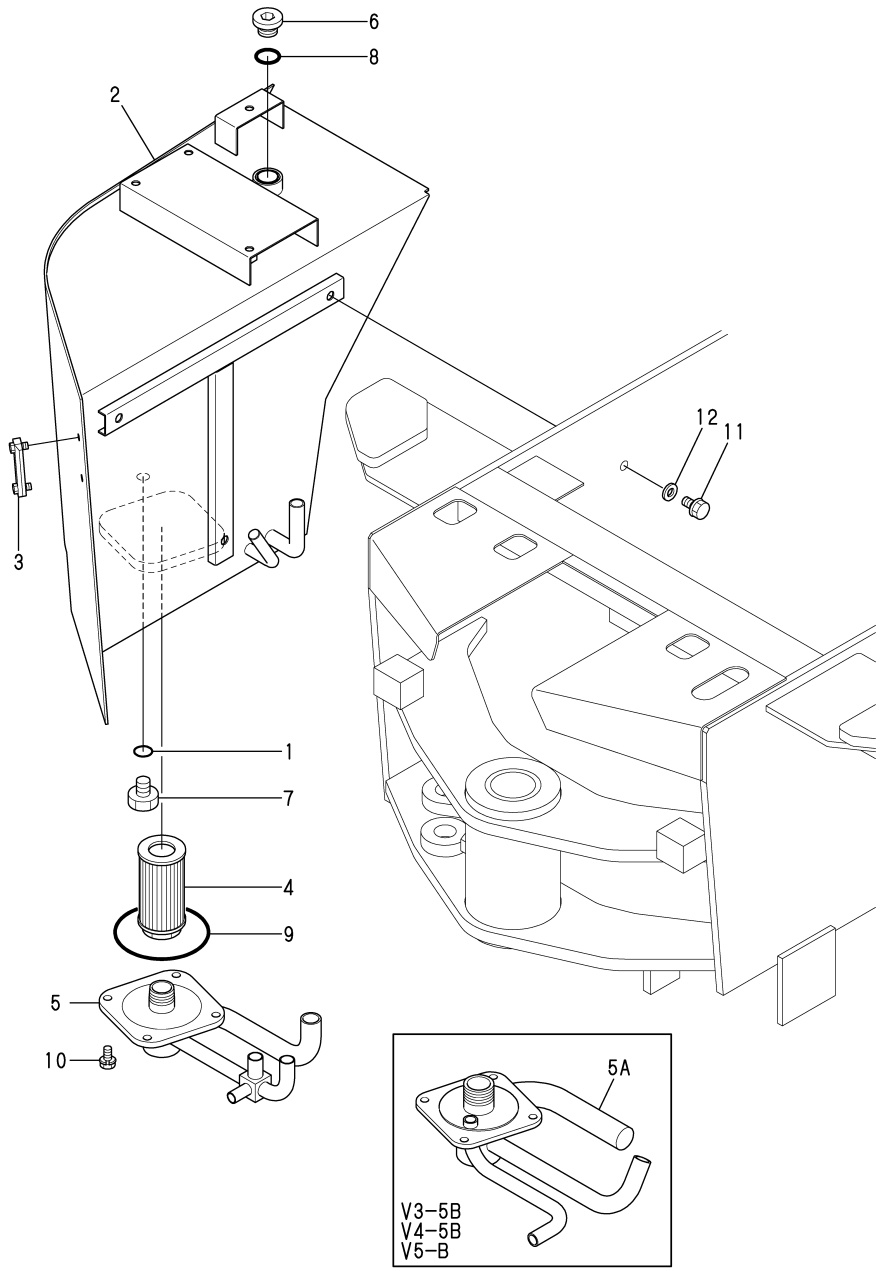

(A)=V3-5A (D)=V5-B
(B)=V3-5B (E)=
(C)=V4-5B (F)=

No.	Lev.	Parts No.	Description	Q'ty (A)	(B)	(C)	(D)	(E)	(F)	I	R
1	1	24311-000160	O-RING, 1AP16.0	1	1	1	1				
2	1	172527-75111	TANK ASSY, RESERVOIR	1	1	1	1				
2-1	1	172527-75111-2	TANK ASSY, RESERVOIR		1					S	
		(B=M/#53661)									
3	1	172524-75190	GAUGE, OIL LEVEL	1	1	1	1				
4	1	172520-75320	FILTER, SUCTION	1	1	1	1				
5	1	172527-75411	FLANGE	1							
5A	1	172534-75410	FLANGE ASSY,SUCTION		1	1	1				
6	1	172116-75850-8	PLUG, OIL FEED	1	1	1	1				
7	1	23491-140002	PLUG, 14	1	1	1	1				
8	1	24311-000380	O-RING, 1AP38.0	1	1	1	1				
9	1	24321-001050	O-RING, 1AG105.0	1	1	1	1				
10	1	26013-100202	BOLT, M10X 20	4	4	4	4				
11	1	26013-120302	BOLT, M12X 30	3	3	3	3				
12	1	22137-120000	WASHER, 12	3	3	3	3				

N:Old $\xleftarrow[\text{No}]{\text{Yes}}$ New, Q:Old $\xleftarrow[\text{Yes}]{\text{No}}$ New, R:Old $\xleftarrow[\text{Yes}]{\text{Yes}}$ New, S:Old $\xleftarrow[\text{No}]{\text{No}}$ New, W:Add, Z:Discontinued, F:Interchangeable by set, K:Q'ty Change

Copyright (C) YANMAR CO., LTD. All RightsReserved.

Fig.56. FILTER & FITTING

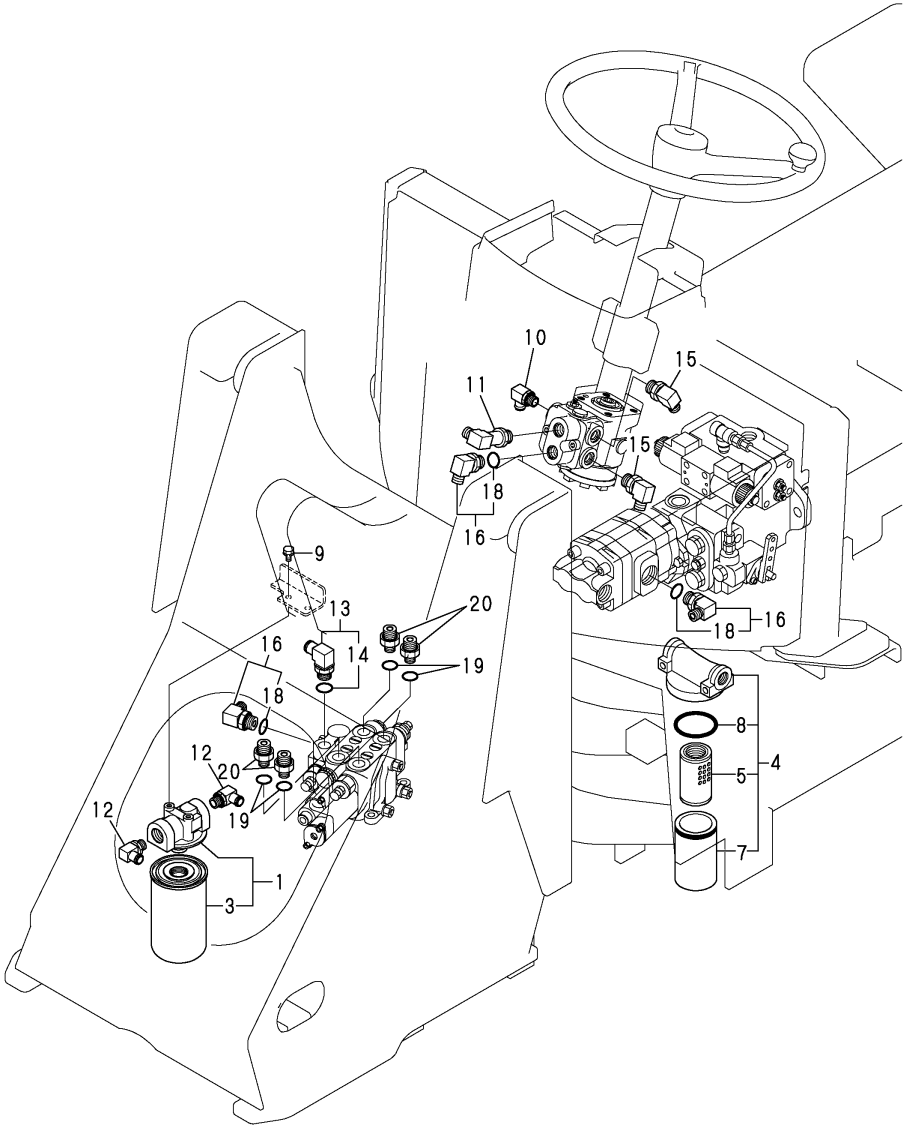

(A)=V3-5A (D)=V5-B
(B)=V3-5B (E)=
(C)=V4-5B (F)=

No.	Lev.	Parts No.	Description	Q'ty (A)	(B)	(C)	(D)	(E)	(F)	I	R
1	1	172527-73850	FILTER, OIL	1	1	1	1				
3	2	172527-73870	ELEMENT	1	1	1	1				
4	1	172652-73750	FILTER,LINE	1	1	1	1				
5	2	172652-73770	ELEMENT, FILTER	1	1	1	1				
7	2	172652-73780	CASE	1	1	1	1				
8	2	172652-73790	O-RING, JAS02053	1	1	1	1				
9	1	26013-080162	BOLT, M8X 16	2	2	2	2				
10	1	1A6380-24080	NIPPLE, 3/8X16 90	1	1	1	1				
11	1	172524-76110	ELBOW	1	1	1	1				
12	1	172467-76120	ELBOW	2	2	2	2				
13	1	172164-76131	ELBOW	1	1	1	1				
14	2	24315-000180	O-RING, 1BP18.0	1	1	1	1				
15	1	172142-76181	JOINT ASSY	2	2	2	2				
16	1	172141-76900	CONNECTOR ASSY	3	3	3	3				
18	2	24315-000180	O-RING, 1BP18.0	3	3	3	3				
19	1	24311-000180	O-RING, 1AP18.0	4	4	4	4				
20	1	933160-01370	CONNECTOR,PF1/2PF3/8	4	4	4	4				

N:Old $\xleftrightarrow[\text{No}]{\text{Yes}}$ New, Q:Old $\xleftrightarrow[\text{Yes}]{\text{No}}$ New, R:Old $\xleftrightarrow[\text{Yes}]{\text{Yes}}$ New, S:Old $\xleftrightarrow[\text{No}]{\text{No}}$ New, W:Add, Z:Discontinued, F:Interchangeable by set, K:Q'ty Change

Copyright (C) YANMAR CO., LTD. All RightsReserved.

Fig.57. HYD.OIL PIPING(HST)

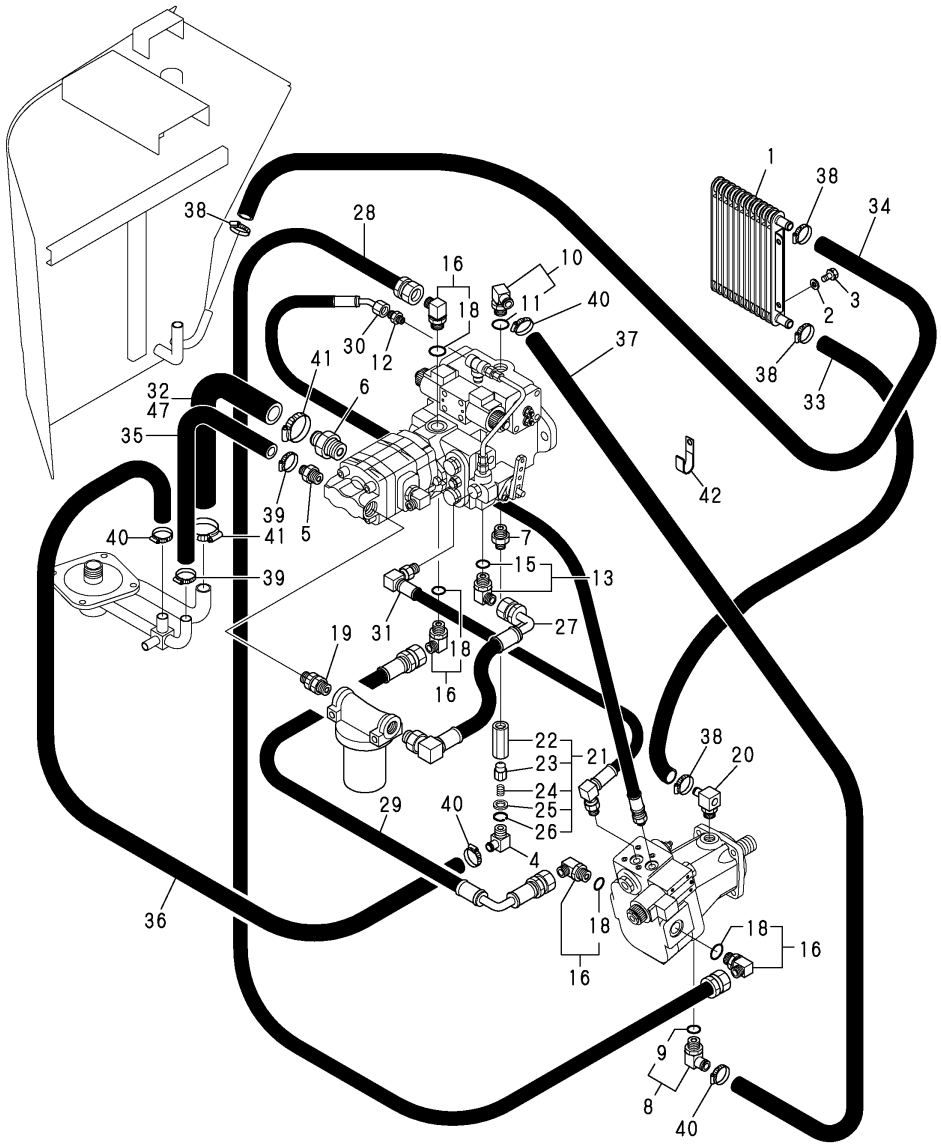

(A)=V3-5A (D)=V5-B
(B)=V3-5B (E)=
(C)=V4-5B (F)=

No.	Lev.	Parts No.	Description	Q'ty (A)	(B)	(C)	(D)	(E)	(F)	I	R
1	1	198448-48810	COOLER ASSY, OIL	1							
2	1	22137-080000	WASHER, 8	2							
3	1	26013-080202	BOLT, M8X 20	2							
4	1	172467-76120	ELBOW	1							
5	1	172524-76210	NIPPLE, HOSE 3/4	1							
6	1	172527-76210	NIPPLE, 1-25	1							
7	1	172524-76230	NIPPLE, PF1/2-PT1/2	1							
8	1	172164-76131	ELBOW	1							
9	2	24315-000180	O-RING, 1BP18.0	1							
10	1	172164-76131	ELBOW	1							
11	2	24315-000180	O-RING, 1BP18.0	1							
12	1	23391-020000	JOINT, RGI-1/4	1							
13	1	172645-76560	CONNECTOR ASSY	1							
15	2	24315-000180	O-RING, 1BP18.0	1							
16	1	172151-76161	ELBOW ASSY	4							
18	2	24315-000180	O-RING, 1BP18.0	4							
19	1	172527-76350	CONNECTOR, PF1/2X1/2	1							
20	1	172527-76460	CONNECTOR, 1/2X16	1							
21	1	172524-76801	RELIEF COMP.,2ND	1							
22	2	172524-76810	BODY,VALVE	1							
23	2	172649-74470	POPPET VALVE	1							
24	2	172649-74480	SPRING, VALVE	1							
25	2	172649-74490	SEAT, SPRING	1							
26	2	22252-000220	RING, 22	1							
27	1	172527-78310	HOSE	1							
28	1	172527-78330	HOSE A	1							
29	1	172527-78380	HOSE B	1							
30	1	172527-78351	HOSE C1	1							
31	1	172527-78360	HOSE C2	1							
32	1	172527-78391	HOSE G616YY045	1							
33	1	172527-78491	HOSE G610YY090	1							
33-1	1	172527-78492	HOSE G610YY098	1						N	
	(A=M/#53110)										
34	1	172527-78441	HOSE G610YY160	1							
34-1	1	172527-78442	HOSE G610YY163S	1						N	
	(A=M/#53110)										
35	1	172175-78121	HOSE	1							
36	1	172527-78461	HOSE G612YY048	1							
37	1	172527-78471	HOSE G612YY075	1							
38	1	23001-022000	CLAMP, HOSE 22	4							
39	1	23001-025000	CLAMP, HOSE 25	2							
40	1	23001-035000	CLAMP, HOSE 35	4							
41	1	23001-041000	CLAMP, HOSE 41	2							
42	1	1A1380-59480	CLAMP, CORD	1							

N:Old $\xleftarrow[\text{No}]{\text{Yes}}$ New, Q:Old $\xleftarrow[\text{Yes}]{\text{No}}$ New, R:Old $\xleftarrow[\text{Yes}]{\text{Yes}}$ New, S:Old $\xleftarrow[\text{No}]{\text{No}}$ New, W:Add, Z:Discontinued, F:Interchangeable by set, K:Q'ty Change

Copyright (C) YANMAR CO., LTD. All RightsReserved.

Fig.58. HYD.OIL PIPING(HST)

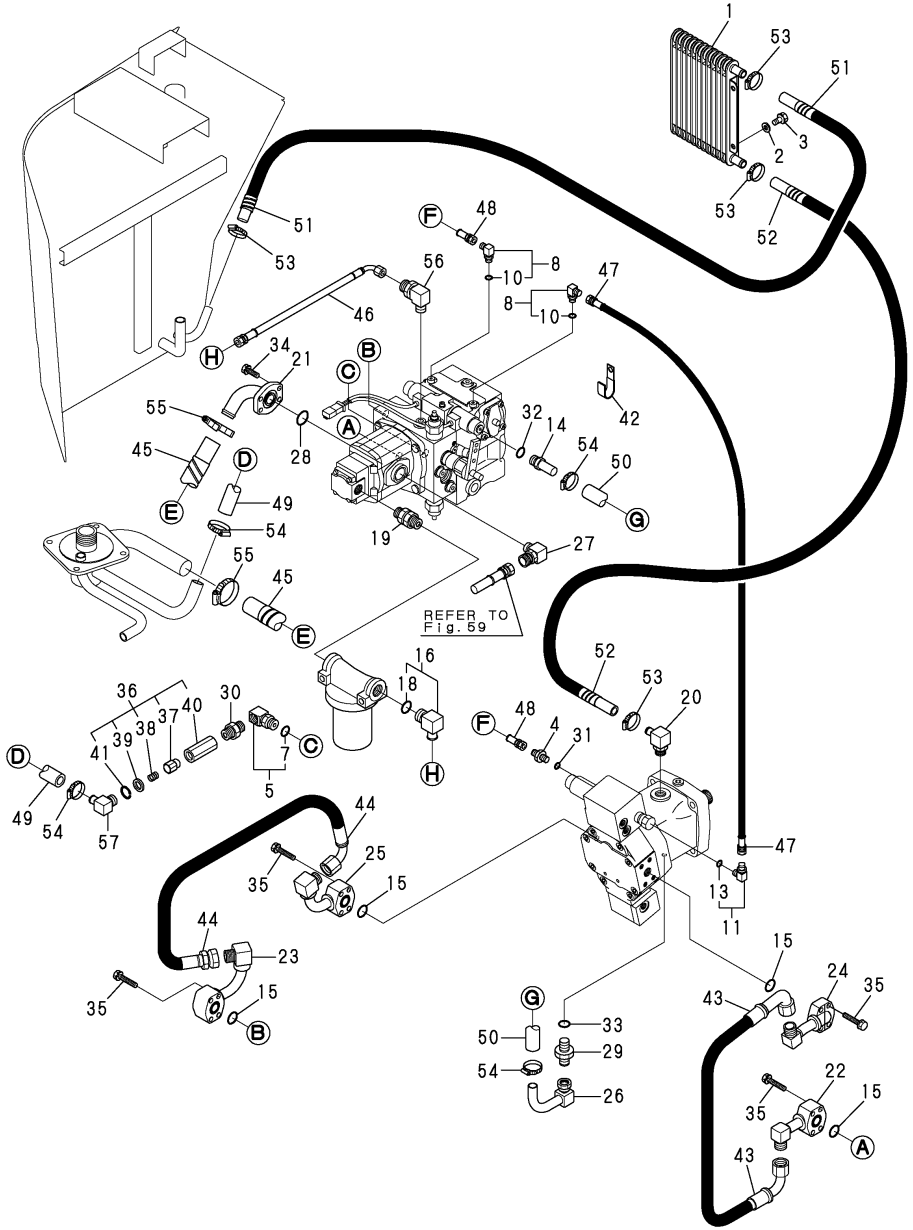

(A)=V3-5A (D)=V5-B
(B)=V3-5B (E)=
(C)=V4-5B (F)=

No.	Lev.	Parts No.	Description	Q'ty (A)	(B)	(C)	(D)	(E)	(F)	I	R
1	1	198448-48810	COOLER ASSY, OIL		1						
1A	1	198138-49100	COOLER ASSY, OIL			1	1				
2	1	22137-080000	WASHER, 8		3	3	3				
3	1	26013-080202	BOLT, M8X 20		3	3	3				
4	1	172123-76121	ADAPTER		1	1	1				
5	1	172122-76131	CONNECTOR, PT1/2X45		1	1	1				
7	2	24315-000180	O-RING, 1BP18.0		1	1	1				
8	1	172141-76180	CONNECTOR ASSY		2	2	2				
10	2	24315-000110	O-RING, 1BP11.0		2	2	2				
11	1	172141-76180	CONNECTOR ASSY		1	1	1				
13	2	24315-000110	O-RING, 1BP11.0		1	1	1				
14	1	172183-76190	JOINT, PF1/2		1	1	1				
15	1	172520-76240	O-RING, AN6227-19		4	4	4				
15-1	1	24315-000300	O-RING, 1BP30.0		4	4	4			S	
		(B=M/# 54032)	(C=M/# 53874) (D=M/# 53120)								
16	1	172157-76300	ELBOW ASSY		1	1	1				
18	2	24315-000180	O-RING, 1BP18.0		1	1	1				
19	1	172527-76350	CONNECTOR, PF1/2X1/2		1	1	1				
20	1	172527-76460	CONNECTOR, 1/2X16		1	1	1				
21	1	172534-76700	PIPE, SUCTION		1	1	1				
21-1	1	172534-76701	PIPE, SUCTION		1	1	1			N	
		(B=M/# 54032)	(C=M/# 53874) (D=M/# 53120)								
22	1	172534-76710	PIPE, MAIN		1	1	1				
22-1	1	172534-76711	PIPE, MAIN		1	1	1			S	1
		(B=M/# 54032)	(C=M/# 53874) (D=M/# 53120)								
23	1	172534-76720	PIPE, MAIN		1	1	1				
23-1	1	172534-76721	PIPE, MAIN		1	1	1			S	1
		(B=M/# 54032)	(C=M/# 53874) (D=M/# 53120)								
24	1	172534-76730	PIPE, MAIN		1	1	1				
24-1	1	172534-76731	PIPE, MAIN		1	1	1			S	1
		(B=M/# 54032)	(C=M/# 53874) (D=M/# 53120)								
25	1	172534-76740	PIPE, MAIN		1	1	1				
25-1	1	172534-76741	PIPE, MAIN		1	1	1			S	1
		(B=M/# 54032)	(C=M/# 53874) (D=M/# 53120)								
26	1	172534-76750	PIPE, DRAIN		1	1	1				
26-1	1	172534-76751	PIPE, DRAIN		1	1	1			N	
		(B=M/# 54032)	(C=M/# 53874) (D=M/# 53120)								
27	1	172534-76760	ELBOW		1	1	1				
28	1	172534-76770	O-RING, AN6227-27		1	1	1				
29	1	172112-77361	CONNECTOR		1	1	1				
30	1	23395-040000	JOINT, RRN-1/2		1	1	1				
31	1	24315-000110	O-RING, 1BP11.0		1	1	1				
32	1	24315-000180	O-RING, 1BP18.0		1	1	1				
33	1	24315-000180	O-RING, 1BP18.0		1	1	1				
34	1	26013-100302	BOLT, M10X 30		4	4	4				
35	1	26013-100502	BOLT, M10X 50		16	16	16				
36	1	172524-76801	RELIEF COMP.,2ND		1	1	1				
37	2	172649-74470	POPPET VALVE		1	1	1				
38	2	172649-74480	SPRING, VALVE		1	1	1				
39	2	172649-74490	SEAT, SPRING		1	1	1				
40	2	172524-76810	BODY,VALVE		1	1	1				

Remarks
(1) INTERCHANGEABLE BY SIMULTANEOUS REPLACEMENT WITH REF. NO.15-1.

N:Old $\xleftarrow[\text{No}]{\text{Yes}}$ New, Q:Old $\xleftarrow[\text{Yes}]{\text{No}}$ New, R:Old $\xleftarrow[\text{Yes}]{\text{Yes}}$ New, S:Old $\xleftarrow[\text{No}]{\text{No}}$ New, W:Add, Z:Discontinued, F:Interchangeable by set, K:Q'ty Change

++ CONTINUE ++

Copyright (C) YANMAR CO., LTD. All RightsReserved.

Fig.58. HYD.OIL PIPING(HST)

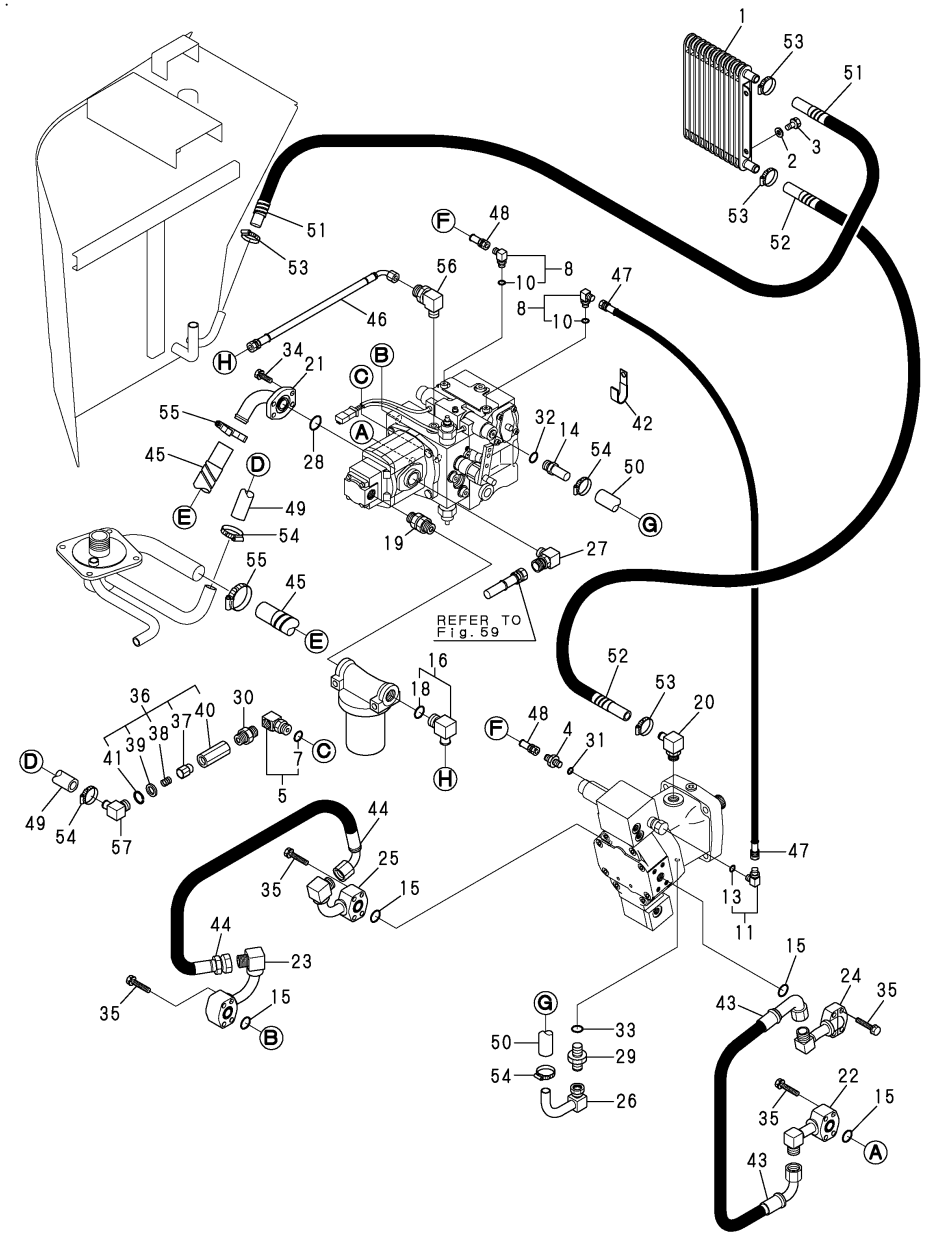

(A)=V3-5A (D)=V5-B
(B)=V3-5B (E)=
(C)=V4-5B (F)=

No.	Lev.	Parts No.	Description	Q'ty (A)	(B)	(C)	(D)	(E)	(F)	I	R
41	2	22252-000220	RING, 22		1	1	1				
42	1	1A1380-59480	CLAMP, CORD		1	1	1				
43	1	172534-78100	HOSE H112CC059		1	1	1				
44	1	172534-78110	HOSE H112BC063		1	1	1				
45	1	172534-78120	HOSE G616YY055S		1	1	1				
46	1	172534-78130	HOSE, P406BC042		1	1	1				
47	1	172534-78140	HOSE, P404BB040		1	1	1				
48	1	172480-78970	HOSE F403BB046		1	1	1				
49	1	172534-78160	HOSE, G612YY040		1	1	1				
50	1	172534-78170	HOSE G610YY093S		1	1	1				
51	1	172527-78442	HOSE G610YY163S		1	1	1				
52	1	172534-78170	HOSE G610YY093S		1	1	1				
53	1	23001-022000	CLAMP, HOSE 22		4	4	4				
54	1	23001-035000	CLAMP, HOSE 35		4	4	4				
55	1	23001-041000	CLAMP, HOSE 41		2	2	2				
56	1	172142-76181	JOINT ASSY		1	1	1				
57	1	172467-76120	ELBOW		1	1	1				

Remarks
(1) INTERCHANGEABLE BY SIMULTANEOUS REPLACEMENT WITH REF. NO.15-1.

N:Old $\frac{\text{Yes}}{\text{No}}$ New, Q:Old $\frac{\text{No}}{\text{Yes}}$ New, R:Old $\frac{\text{Yes}}{\text{Yes}}$ New, S:Old $\frac{\text{No}}{\text{No}}$ New, W:Add, Z:Discontinued, F:Interchangeable by set, K:Q'ty Change

Copyright (C) YANMAR CO., LTD. All RightsReserved.

Fig.59. HYD.OIL PIPING(LOADER)

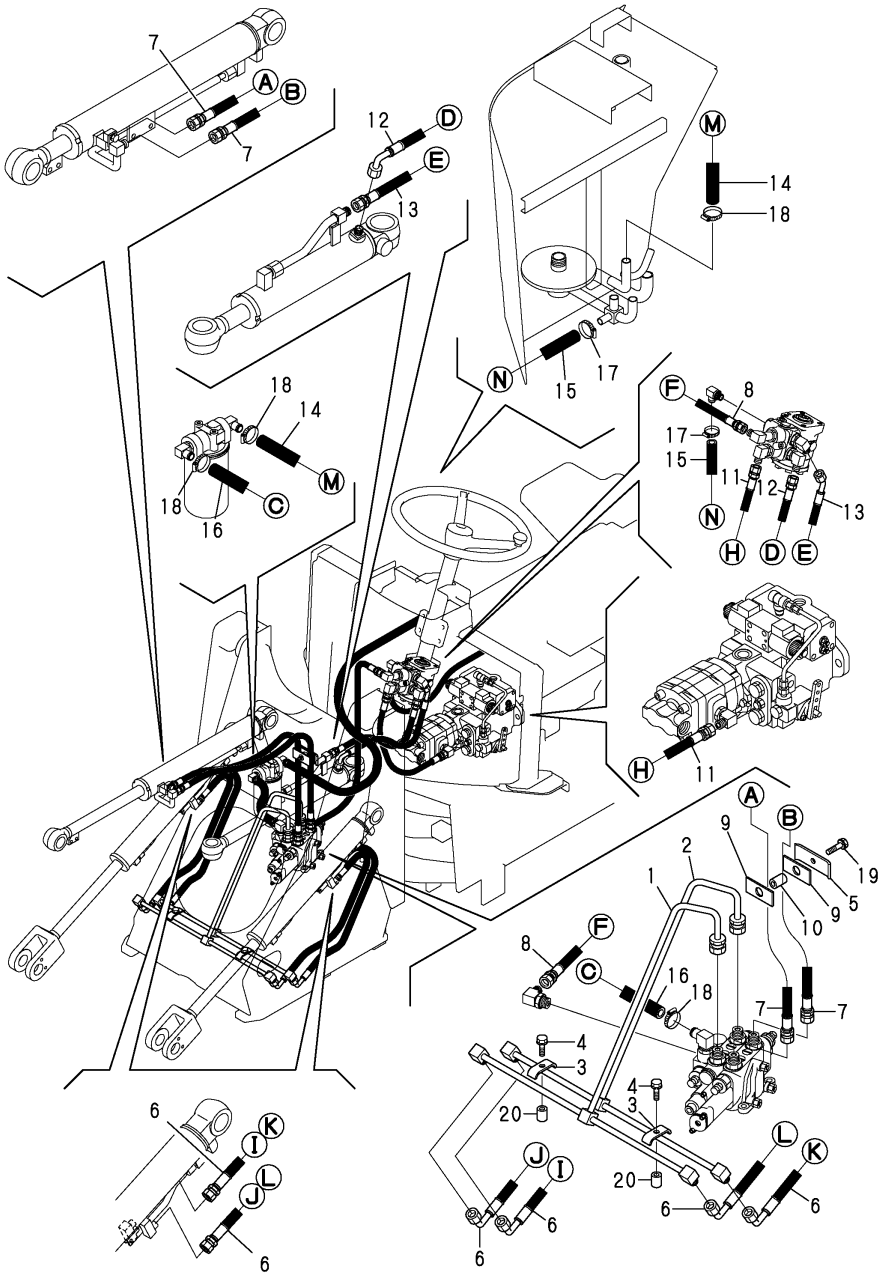

(A)=V3-5A (D)=V5-B
(B)=V3-5B (E)=
(C)=V4-5B (F)=

No.	Lev.	Parts No.	Description	Q'ty (A)	(B)	(C)	(D)	(E)	(F)	I	R
1	1	172527-76511	PIPE ASSY, LIFT	1	1	1	1				
2	1	172527-76521	PIPE ASSY, LIFT	1	1	1	1				
3	1	172110-76170-4	PLATE	2	2	2	2				
4	1	26013-080352	BOLT, M8X 35	2	2	2	2				
5	1	172520-77380	W.P BACH PLATE	1	1	1	1				
6	1	172527-78111	H0SE	4	4	4	4				
7	1	172527-78130	H0SE	2	2	2	2				
8	1	172527-78140	H0SE	1	1	1	1				
9	1	172524-78150	RUBBER	2	2	2	2				
10	1	172524-78170	PIPE	1	1	1	1				
11	1	172527-78210	H0SE	1	1	1	1				
12	1	172527-78230	H0SE	1	1	1	1				
13	1	172527-78240	H0SE	1	1	1	1				
14	1	172527-78251	H0SE G612YY090S	1	1						
14A	1	172444-78310	HOSE			1	1				
15	1	172527-78750	HOSE G610YY105	1	1	1	1				
16	1	172527-78731	H0SE G612YY027	1	1						
16A	1	172448-75300	HOSE G612YY032			1	1				
17	1	23001-022000	CLAMP, HOSE 22	2	2	2	2				
18	1	23001-035000	CLAMP, HOSE 35	4	4	4	4				
19	1	26013-100502	BOLT, M10X 50	1	1	1	1				
20	1	194630-15520	COLLAR, 9.2X13.8X11	2	2	2	2				

N:Old $\frac{\text{Yes}}{\text{No}}$ New, Q:Old $\frac{\text{No}}{\text{Yes}}$ New, R:Old $\frac{\text{Yes}}{\text{Yes}}$ New, S:Old $\frac{\text{No}}{\text{No}}$ New, W:Add, Z:Discontinued, F:Interchangeable by set, K:Q'ty Change

Copyright (C) YANMAR CO., LTD. All RightsReserved.

Fig.60. HYD.OIL PIPING(3RD)

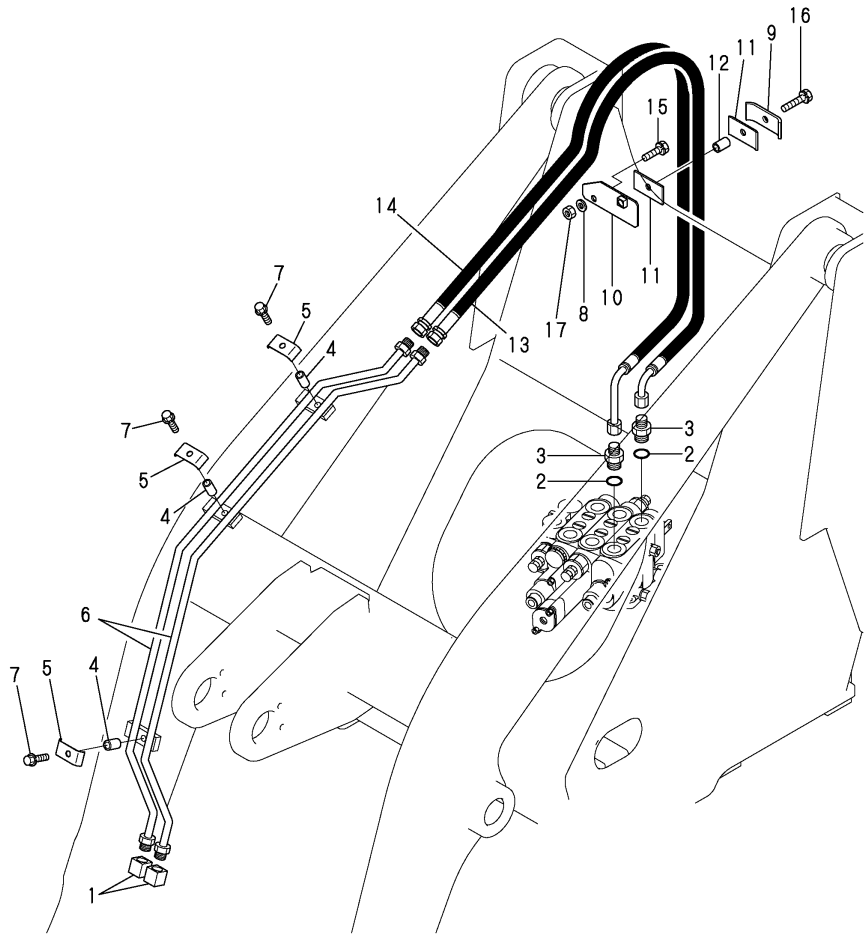

(A)=V3-5A (D)=V5-B
(B)=V3-5B (E)=
(C)=V4-5B (F)=

No.	Lev.	Parts No.	Description	Q'ty (A)	(B)	(C)	(D)	(E)	(F)	I	R
1	1	1A6380-48870	CAP, G3/8	2	2	2	2				
2	1	24311-000180	O-RING, 1AP18.0	2	2	2	2				
3	1	933160-01370	CONNECTOR,PF1/2PF3/8	2	2	2	2				
4	1	194630-15520	COLLAR, 9.2X13.8X11	3	3	3	3				
5	1	172110-76170-4	PLATE	3	3	3	3				
6	1	172527-77370	PIPE ASSY, 3RD	2	2						
6A	1	172528-77370	PIPE ASSY, 3RD			2					
6B	1	172529-77370	PIPE ASSY, 3RD				2				
7	1	26013-080352	BOLT, M8X 35	3	3	3	3				
8	1	194145-04810	WASHER	1	1	1	1				
9	1	172520-77380	W.P BACH PLATE	1	1	1	1				
10	1	172527-77400	STAY ASSY, HOSE	1	1	1	1				
11	1	172524-78150	RUBBER	2	2	2	2				
12	1	172524-78170	PIPE	1	1	1	1				
13	1	172527-78570	HOSE,H206BC135	1	1	1	1				
14	1	172527-78580	HOSE,H206BC145	1	1	1	1				
15	1	26013-100352	BOLT, M10X 35	1	1	1	1				
16	1	26013-100452	BOLT, M10X 45	1	1	1	1				
17	1	26716-100002	NUT, M10	1	1	1	1				

N:Old $\xleftarrow[\text{No}]{\text{Yes}}$ New, Q:Old $\xleftarrow[\text{Yes}]{\text{No}}$ New, R:Old $\xleftarrow[\text{Yes}]{\text{Yes}}$ New, S:Old $\xleftarrow[\text{No}]{\text{No}}$ New, W:Add, Z:Discontinued, F:Interchangeable by set, K:Q'ty Change

Copyright (C) YANMAR CO., LTD. All RightsReserved.

Fig.61. LIFT ARM

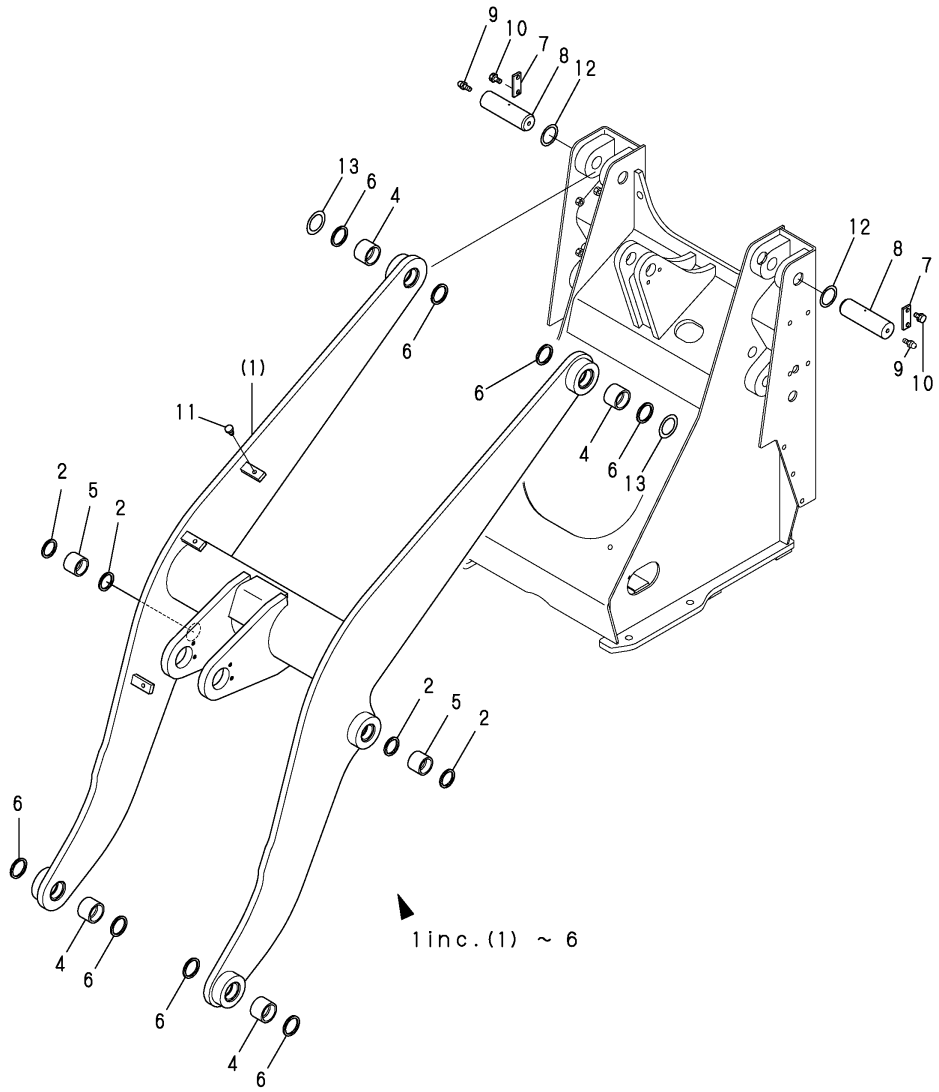

(A)=V3-5A (D)=V5-B
(B)=V3-5B (E)=
(C)=V4-5B (F)=

No.	Lev.	Parts No.	Description	Q'ty (A)	(B)	(C)	(D)	(E)	(F)	I	R
1	1	172527-92100	ARM ASSY, LIFT	1	1						
1A	1	172528-92100	ARM ASSY, LIFT			1					
1B	1	172529-92100	ARM ASSY, LIFT				1				
2	2	172448-72650	SEAL, DUST	4	4	4	4				
4	2	172527-91180	BUSH	4	4	4	4				
5	2	172527-91190	BUSH	2	2	2	2				
6	2	172168-81410	SEAL, DUST	8	8	8	8				
7	1	172512-91210	PLATE, PIN LOCK	2	2	2	2				
8	1	172527-91210	PIN 45X153	2	2	2	2				
9	1	24764-020000	NIPPLE, GREASE R1/8	2	2	2	2				
10	1	26013-100202	BOLT, M10X 20	4	4	4	4				
11	1	172444-17660	CLIP, TREE	3	3	3	3				
12	1	172176-81660	COLLAR, 45.5X65X1	2	2	2	2				
13	1	172527-91230	SHIM, 45X65X2.6	2	2	2	2				

N:Old $\xleftarrow[\text{No}]{\text{Yes}}$ New, Q:Old $\xleftarrow[\text{Yes}]{\text{No}}$ New, R:Old $\xleftarrow[\text{Yes}]{\text{Yes}}$ New, S:Old $\xleftarrow[\text{No}]{\text{No}}$ New, W:Add, Z:Discontinued, F:Interchangeable by set, K:Q'ty Change

Copyright (C) YANMAR CO., LTD. All RightsReserved.

Fig.62. LOADER LINK

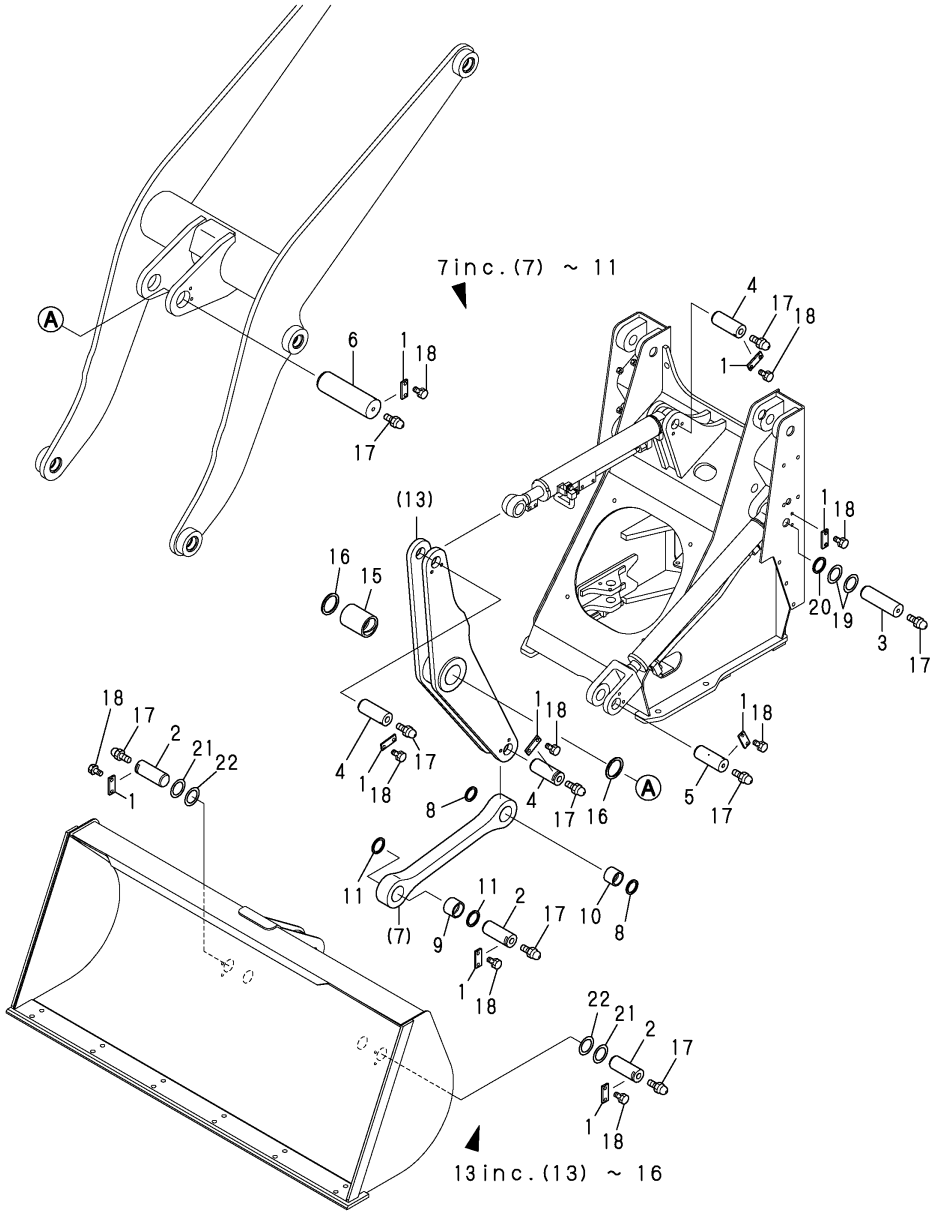

(A)=V3-5A (D)=V5-B
(B)=V3-5B (E)=
(C)=V4-5B (F)=

No.	Lev.	Parts No.	Description	Q'ty (A)	(B)	(C)	(D)	(E)	(F)	I	R
1	1	172512-91210	PLATE, PIN LOCK	11	11	11	11				
2	1	172527-91250	PIN 45X115	3	3	3	3				
3	1	172527-91260	PIN 40X153	2	2	2	2				
4	1	172527-91270	PIN 40X107	3	3	3	3				
5	1	172527-91280	PIN 40X114.5	2	2	2	2				
6	1	172527-91290	PIN 60X172	1	1	1	1				
7	1	172527-91301	LINK ASSY	1	1						
7A	1	172528-91301	LINK ASSY			1					
7B	1	172529-91301	LINK ASSY				1				
8	2	172448-72650	SEAL, DUST	2	2	2	2				
9	2	172527-91180	BUSH	1	1	1	1				
10	2	172527-91190	BUSH	1	1	1	1				
11	2	172168-81410	SEAL, DUST	2	2	2	2				
13	1	172527-91600	BELL CRANK ASSY	1	1						
13A	1	172528-91600	BELL CRANK ASSY			1					
13B	1	172529-91600	BELL-CRANK ASSY				1				
15	2	172527-91650	BUSH	1	1	1	1				
16	2	172020-10620	SEAL, DUST	2	2	2	2				
17	1	24764-020000	NIPPLE, GREASE R1/8	11	11	11	11				
18	1	26013-100202	BOLT, M10X 20	22	22	22	22				
19	1	172164-81770	COLLAR, 40.5X60X1	4	4	4	4				
20	1	172176-81660	COLLAR, 45.5X65X1	2	2	2	2				
21	1	172527-91230	SHIM, 45X65X2.6	2	2	2	2				
22	1	172527-91220	SHIM, 45X65X1.2	2	2	2	2				

N:Old $\frac{\text{Yes}}{\text{No}}$ New, Q:Old $\frac{\text{No}}{\text{Yes}}$ New, R:Old $\frac{\text{Yes}}{\text{Yes}}$ New, S:Old $\frac{\text{No}}{\text{No}}$ New, W:Add, Z:Discontinued, F:Interchangeable by set, K:Q'ty Change

Copyright (C) YANMAR CO., LTD. All RightsReserved.

Fig.63. BUCKET

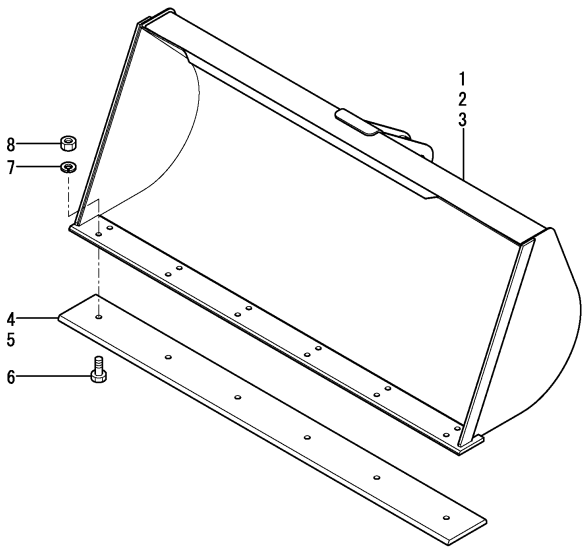

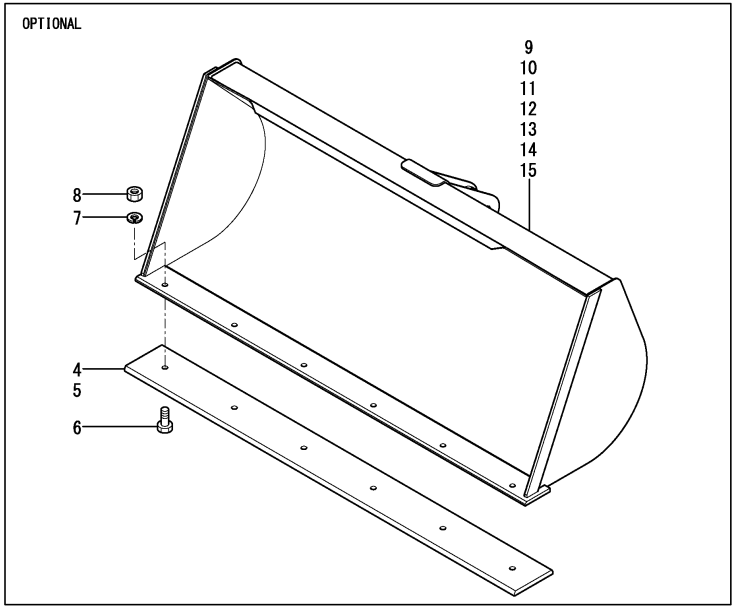

(A)=V3-5A (D)=V5-B
(B)=V3-5B (E)=
(C)=V4-5B (F)=

No.	Lev.	Parts No.	Description	Q'ty (A)	(B)	(C)	(D)	(E)	(F)	I	R
1	1	172527-91400	BUCKET ASSY	1	1						
1-1	1	172527-91400-2	BUCKET ASSY		1					S	1
		(B=M/# 53661)									
2	1	172528-91400	BUCKET ASSY			1					
2-1	1	172528-91400-1	BUCKET ASSY			1				S	1
		(C=M/# 52605)									
3	1	172529-91400	BUCKET ASSY				1				
3-1	1	172529-91400-1	BUCKET ASSY				1			S	1
		(D=M/# 52605)									
4	1	172527-91390	CRAW	1	1						
4-1	1	172527-91390-2	CRAW		1					S	
		(B=M/# 53661)									
5	1	172528-91390	CRAW			1	1				
5-1	1	172528-91390-1	CRAW			1	1			S	
		(C=M/# 52605)	(D=M/# 52605)								
6	1	172524-91520	BOLT M14X 35 PLATED	6	6	6	6				
7	1	22217-140000	WASHER, SPRING 14	6	6	6	6				
8	1	26736-140002	NUT, M14	6	6	6	6				
9	1	172527-91700	BUCKET ASSY	1	1						2
9-1	1	172527-91700-1	BUCKET ASSY		1					S	2
		(B=M/# 53661)									
10	1	172528-91700	BUCKET ASSY			1					2
10-1	1	172528-91700-1	BUCKET ASSY			1				S	2
		(C=M/# 52605)									
11	1	172529-91700	BUCKET ASSY				1				2
11-1	1	172529-91700-1	BUCKET ASSY				1			S	2
		(D=M/# 53001)									
12	1	172527-91900	BUCKET ASSY	1	1						2
12-1	1	172527-91900-1	BUCKET ASSY		1					S	2
		(B=M/# 53661)									
13	1	172527-91201	BUCKET ASSY	1	1						2
13-1	1	172527-91201-1	BUCKET ASSY		1					S	3
		(B=M/# 53661)									
14	1	172528-91201	BUCKET ASSY			1					3
14-1	1	172528-91201-1	BUCKET ASSY			1				S	3
		(C=M/# 52604)									
15	1	172529-91201	BUCKET ASSY				1				3
15-1	1	172529-91201-1	BUCKET ASSY				1			S	3
		(D=M/# 53001)									

Remarks
(1)Kit are shown in Fig.76(63C) from Fig.74(63A).
(2)Kit are shown in Fig.80 from Fig.77.
(3)Kit are shown in Fig.83 from Fig.81.

N:Old $\overset{\text{Yes}}{\underset{\text{No}}{\leftrightarrows}}$ New, Q:Old $\overset{\text{No}}{\underset{\text{Yes}}{\leftrightarrows}}$ New, R:Old $\overset{\text{Yes}}{\underset{\text{Yes}}{\leftrightarrows}}$ New, S:Old $\overset{\text{No}}{\underset{\text{No}}{\leftrightarrows}}$ New, W:Add, Z:Discontinued, F:Interchangeable by set, K:Q'ty Change

Copyright (C) YANMAR CO., LTD. All RightsReserved.

Fig.74. (63A)BUCKET(0.4)

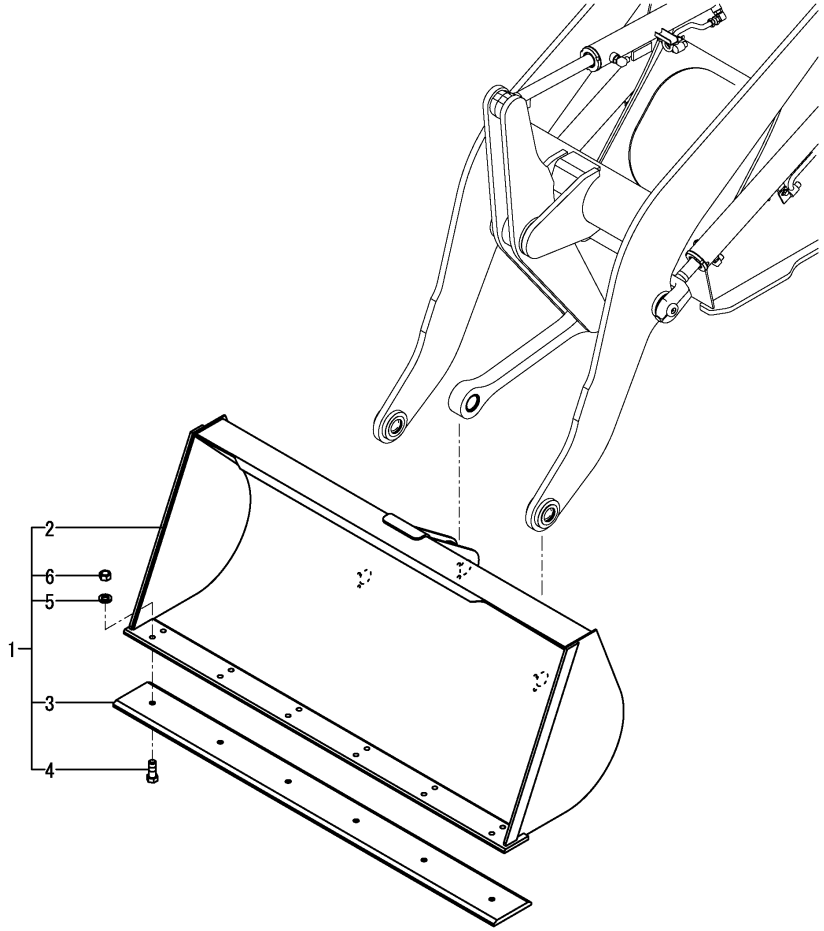

(A)=V3-5A (D)=V5-B
(B)=V3-5B (E)=
(C)=V4-5B (F)=

No.	Lev.	Parts No.	Description	Q'ty (A)	(B)	(C)	(D)	(E)	(F)	I	R
1	1	172538-08400	BUCKET KIT	1	1						
2	2	172527-91400-2	BUCKET ASSY	1	1						
3	2	172527-91390-2	CRAW	1	1						
4	2	172524-91520	BOLT M14X 35 PLATED	6	6						
5	2	22217-140000	WASHER, SPRING 14	6	6						
6	2	26736-140002	NUT, M14	6	6						

N:Old $\xleftrightarrow[\text{No}]{\text{Yes}}$ New, Q:Old $\xleftrightarrow[\text{Yes}]{\text{No}}$ New, R:Old $\xleftrightarrow[\text{Yes}]{\text{Yes}}$ New, S:Old $\xleftrightarrow[\text{No}]{\text{No}}$ New, W:Add, Z:Discontinued, F:Interchangeable by set, K:Q'ty Change

Copyright (C) YANMAR CO., LTD. All RightsReserved.

Fig.75. (63B)BUCKET(0.5)

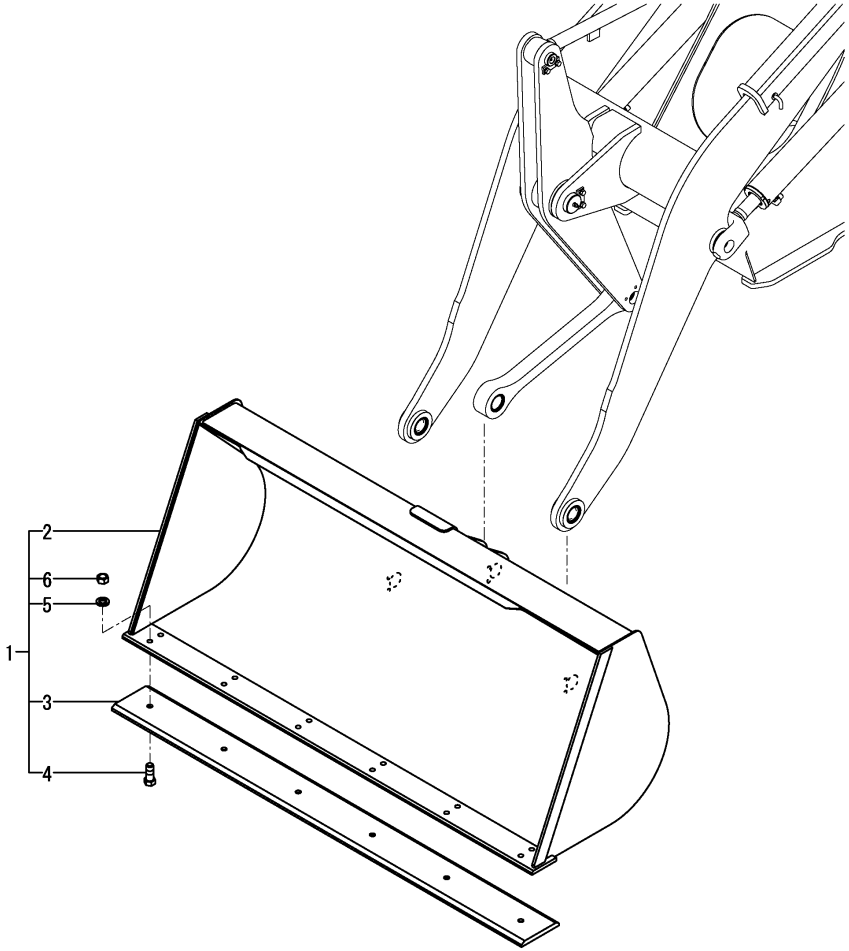

(A)=V3-5A (D)=V5-B
(B)=V3-5B (E)=
(C)=V4-5B (F)=

No.	Lev.	Parts No.	Description	Q'ty (A)	(B)	(C)	(D)	(E)	(F)	I	R
1	1	172539-08400	BUCKET KIT			1					
2	2	172528-91400-1	BUCKET ASSY			1					
3	2	172528-91390-1	CRAW			1					
4	2	172524-91520	BOLT M14X 35 PLATED			6					
5	2	22217-140000	WASHER, SPRING 14			6					
6	2	26736-140002	NUT, M14			6					

N:Old $\xleftrightarrow[\text{No}]{\text{Yes}}$ New, Q:Old $\xleftrightarrow[\text{Yes}]{\text{No}}$ New, R:Old $\xleftrightarrow[\text{Yes}]{\text{Yes}}$ New, S:Old $\xleftrightarrow[\text{No}]{\text{No}}$ New, W:Add, Z:Discontinued, F:Interchangeable by set, K:Q'ty Change

Copyright (C) YANMAR CO., LTD. All RightsReserved.

Fig.76. (63C)BUCKET(0.6)

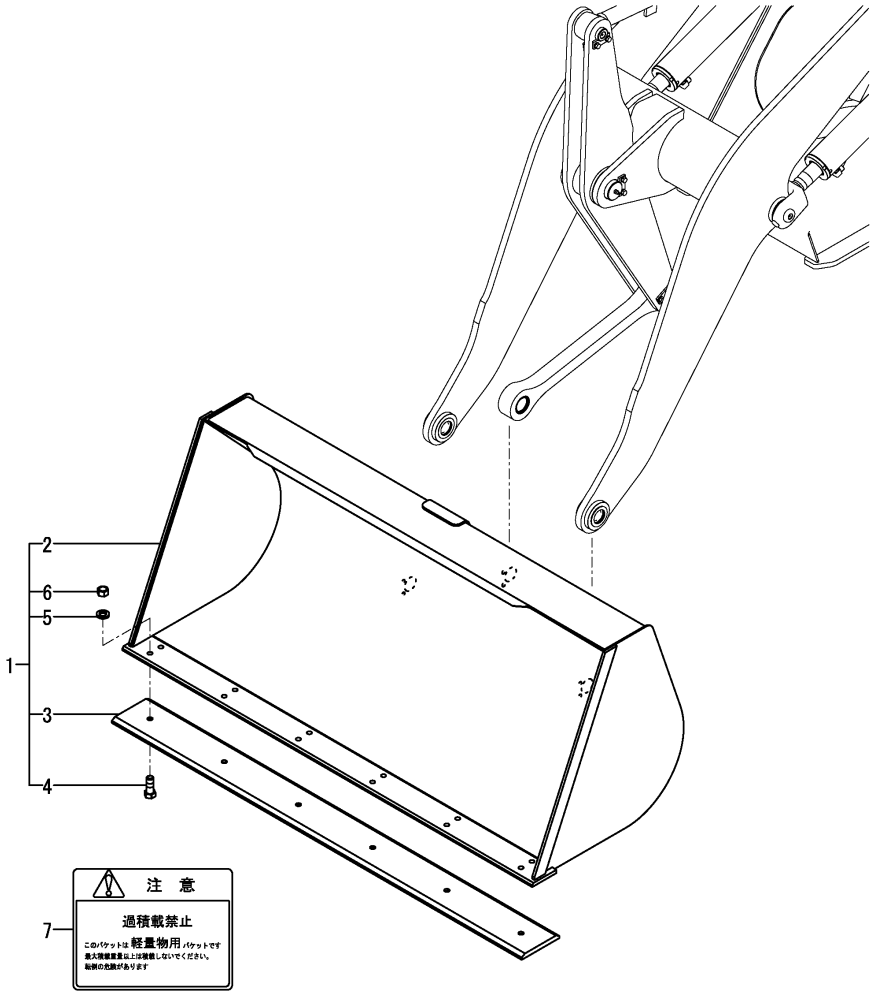

(A)=V3-5A
(B)=V3-5B
(C)=V4-5B
(D)=V5-B
(E)=
(F)=

No.	Lev.	Parts No.	Description	Q'ty (A)	(B)	(C)	(D)	(E)	(F)	I	R
1	1	172543-08400	BUCKET KIT				1				
2	2	172529-91400-1	BUCKET ASSY				1				
3	2	172528-91390-1	CRAW				1				
4	2	172524-91520	BOLT M14X 35 PLATED				6				
5	2	22217-140000	WASHER, SPRING 14				6				
6	2	26736-140002	NUT, M14				6				
7	1	172519-03360	LABEL				1				

N:Old $\xleftarrow[\text{No}]{\text{Yes}}$ New, Q:Old $\xleftarrow[\text{Yes}]{\text{No}}$ New, R:Old $\xleftarrow[\text{Yes}]{\text{Yes}}$ New, S:Old $\xleftarrow[\text{No}]{\text{No}}$ New, W:Add, Z:Discontinued, F:Interchangeable by set, K:Q'ty Change

Copyright (C) YANMAR CO., LTD. All RightsReserved.

Fig.64. ATTACH HOLDER(ATTACHMENT)

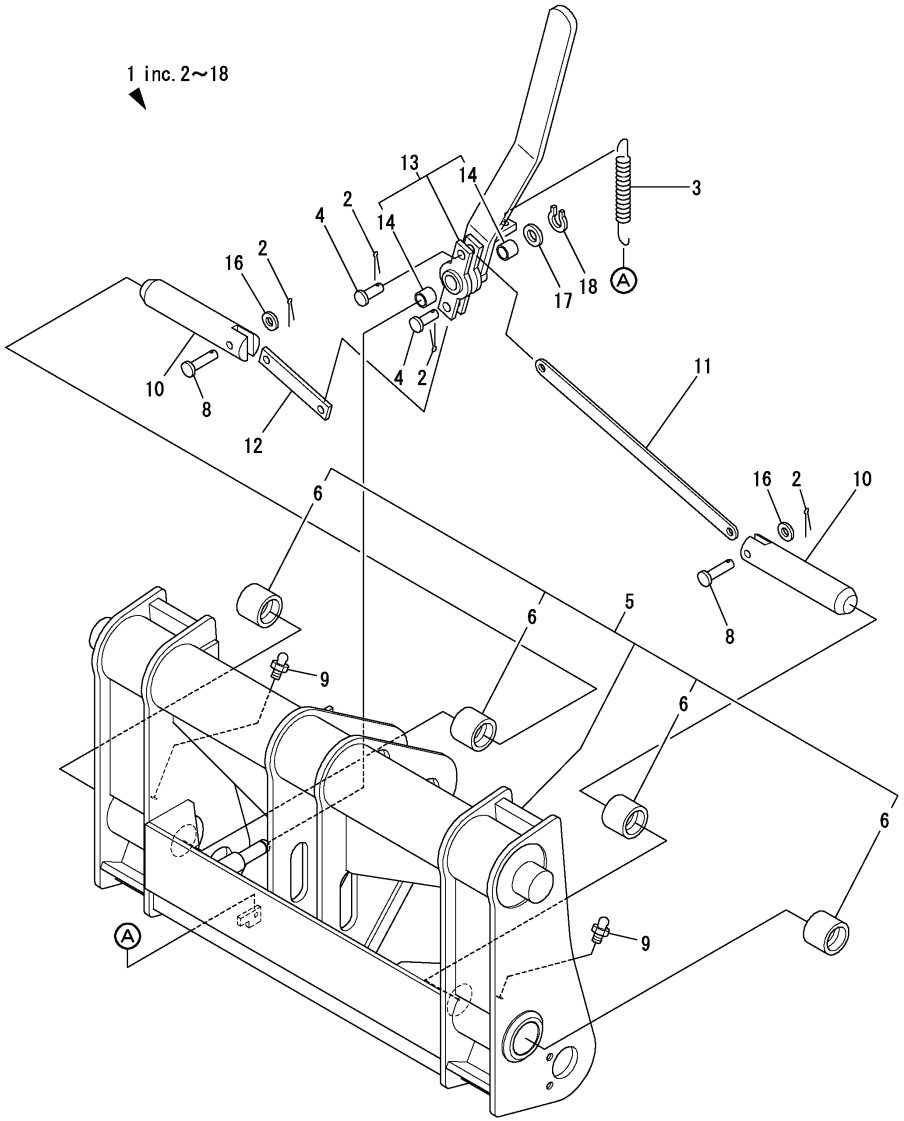

(A)=V3-5A (D)=V5-B
(B)=V3-5B (E)=
(C)=V4-5B (F)=

No.	Lev.	Parts No.	Description	Q'ty (A)	(B)	(C)	(D)	(E)	(F)	I	R
1	1	772527-96200	HOLDER, ATTACHMENT	1	1	1	1				
1-1	1	772527-96200-1	HOLDER, ATTACHMENT		1	1	1			S	
		(B=M/# 53661)	(C=M/# 52605) (D=M/# 53001)								
2	2	1C6360-65700	PIN, SNAP 10	4	4	4	4				
3	2	172511-42190	SPRING, RETURN	1	1	1	1				
4	2	172210-70750	PIN 10X26	2	2	2	2				
5	2	172527-96200	HOLDER, ATTACHMENT	1	1	1	1				
5-1	2	172527-96200-1	HOLDER, ATTACHMENT		1	1	1			S	
		(B=M/# 53661)	(C=M/# 52605) (D=M/# 53001)								
6	3	172520-91210	BUSH 35X45X33	4	4	4	4				
8	2	22487-100400	PIN 10X 40	2	2	2	2				
9	2	24764-020000	NIPPLE, GREASE R1/8	2	2	2	2				
10	2	172520-96450	PIN 35X175	2	2	2	2				
11	2	172516-96460	LINK L=365, LEVER	1	1	1	1				
12	2	172520-96460	LINK L=82	1	1	1	1				
13	2	172520-96480	LEVER, ATTACH.	1	1	1	1				
14	3	24550-015150	BUSH, 15X15	2	2	2	2				
16	2	22137-100000	WASHER, 10	2	2	2	2				
17	2	22137-140000	WASHER, 14	1	1	1	1				
18	2	22242-000140	RING, 14	1	1	1	1				

N:Old $\overset{\text{Yes}}{\underset{\text{No}}{\leftrightarrow}}$ New, Q:Old $\overset{\text{No}}{\underset{\text{Yes}}{\leftrightarrow}}$ New, R:Old $\overset{\text{Yes}}{\underset{\text{Yes}}{\leftrightarrow}}$ New, S:Old $\overset{\text{No}}{\underset{\text{No}}{\leftrightarrow}}$ New, W:Add, Z:Discontinued, F:Interchangeable by set, K:Q'ty Change

Copyright (C) YANMAR CO., LTD. All RightsReserved.

Fig.65. BUCKET&MANIA FORK(ATTACHMENT)

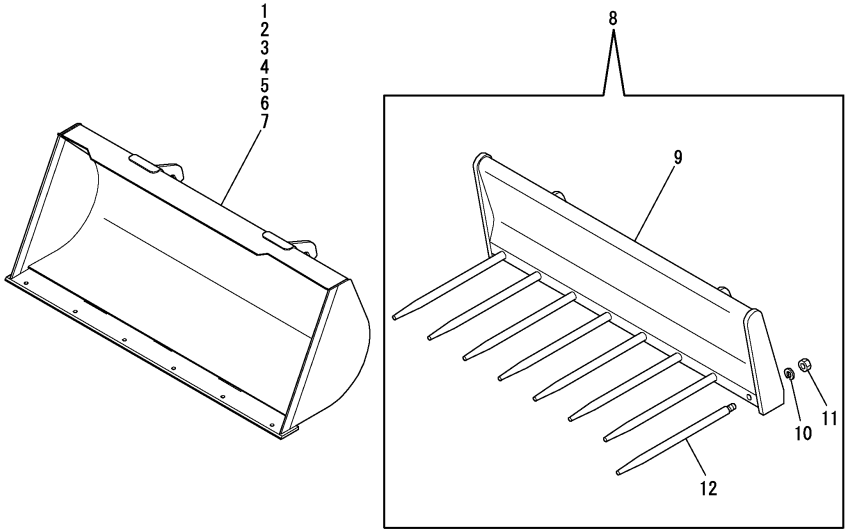

(A)=V3-5A (D)=V5-B
(B)=V3-5B (E)=
(C)=V4-5B (F)=

No.	Lev.	Parts No.	Description	Q'ty (A)	(B)	(C)	(D)	(E)	(F)	I	R
1	1	172527-96400	BUCKET ASSY	1	1						
1-1	1	172527-96400-1	BUCKET ASSY		1					S	1
		(B=M/# 53661)									
2	1	172528-96400	BUCKET ASSY			1					
2-1	1	172528-96400-1	BUCKET ASSY			1				S	1
			(C=M/# 52605)								
3	1	172529-96400	BUCKET ASSY				1				
3-1	1	172529-96400-1	BUCKET ASSY				1			S	1
			(D=M/# 53001)								
4	1	172527-96500	BUCKET ASSY	1	1						
4-1	1	172527-96500-1	BUCKET ASSY		1					S	1
		(B=M/# 53661)									
5	1	172528-96500	BUCKET ASSY			1					
5-1	1	172528-96500-1	BUCKET ASSY			1				S	1
			(C=M/# 52605)								
6	1	172529-96500	BUCKET ASSY				1				
6-1	1	172529-96500-1	BUCKET ASSY				1			S	1
			(D=M/# 53001)								
7	1	172527-96600	BUCKET ASSY	1	1						
7-1	1	172527-96600-1	BUCKET ASSY		1					S	1
		(B=M/# 53661)									
8	1	772520-96700-3	FORK ASSY, MANURE	1	1	1	1				
8-1	1	772520-96700-4	FORK ASSY, MANURE		1	1	1			S	
		(B=M/# 53661)	(C=M/# 52605) (D=M/# 53001)								
9	2	172520-96710-3	FORK, MANURE	1	1	1	1				
9-1	2	172520-96710-4	FORK, MANURE		1	1	1			S	
		(B=M/# 53661)	(C=M/# 52605) (D=M/# 53001)								
10	2	22217-200000	WASHER, SPRING 20	8	8	8	8				
11	2	26716-200002	NUT, M20	8	8	8	8				
12	2	981085-91510-3	TINE	8	8	8	8				
12-1	2	981085-91510-4	TINE		8	8	8			S	
		(B=M/# 53661)	(C=M/# 52605) (D=M/# 53001)								

Remarks
(1)Kit are shown in Fig.90 from Fig.84.

N:Old $\xleftrightarrow[\text{No}]{\text{Yes}}$ New, Q:Old $\xleftrightarrow[\text{Yes}]{\text{No}}$ New, R:Old $\xleftrightarrow[\text{Yes}]{\text{Yes}}$ New, S:Old $\xleftrightarrow[\text{No}]{\text{No}}$ New, W:Add, Z:Discontinued, F:Interchangeable by set, K:Q'ty Change

Copyright (C) YANMAR CO., LTD. All RightsReserved.

Fig.66. PALLET FORK(ATTACHMENT)

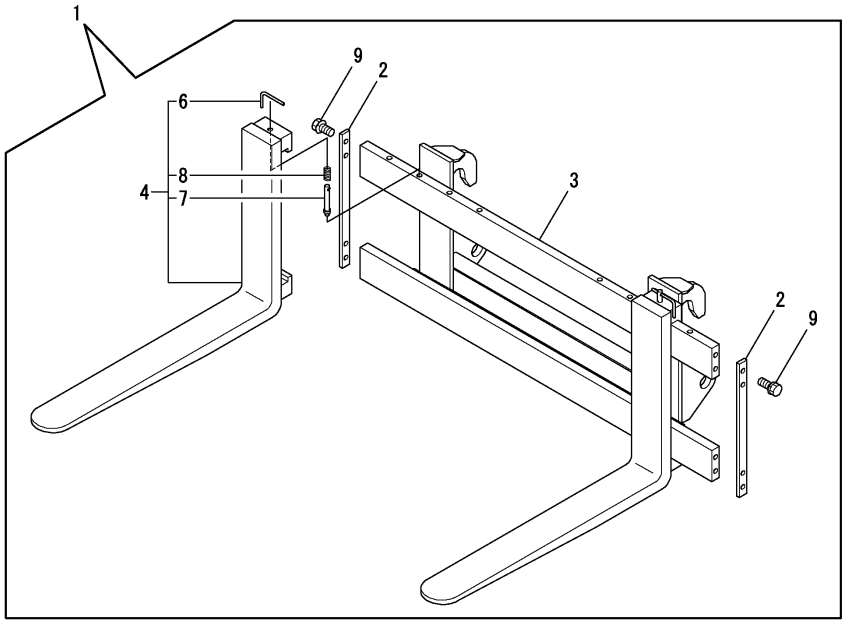

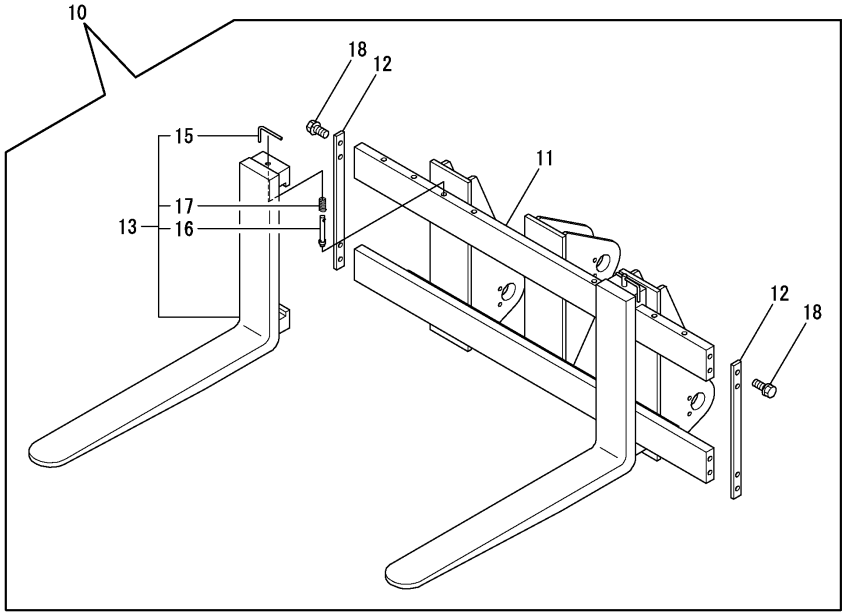

(A)=V3-5A (D)=V5-B
(B)=V3-5B (E)=
(C)=V4-5B (F)=

No.	Lev.	Parts No.	Description	Q'ty (A)	(B)	(C)	(D)	(E)	(F)	I	R
1	1	772527-96700	FORK, PALLET Q	1	1	1	1				
1-1	1	772527-96700-1	FORK ASSY, PALLET		1	1	1			S	
		(B=M/# 53661)	(C=M/# 52605) (D=M/# 53001)								
2	2	172511-96250-3	PLATE, SIDE	2	2	2	2				
2-1	2	172511-96250-4	PLATE, SIDE		2	2	2			S	
		(B=M/# 53661)	(C=M/# 52605) (D=M/# 53001)								
3	2	172527-96700	FORK, PALLET Q	1	1	1	1				
3-1	2	172527-96700-1	FORK ASSY, PALLET		1	1	1			S	
		(B=M/# 53661)	(C=M/# 52605) (D=M/# 53001)								
4	2	172520-96830-3	FORK ASSY	2	2	2	2				
4-1	2	172520-96830-4	FORK ASSY		2	2	2			S	
		(B=M/# 53661)	(C=M/# 52605) (D=M/# 53001)								
6	3	981085-91230	LEVER	2	2	2	2				
7	3	981085-91240	PIN, FORK	2	2	2	2				
8	3	981085-91250	SPRING	2	2	2	2				
9	2	26013-120252	BOLT, M12X 25	8	8	8	8				
10	1	772527-96100	FORK, PALLET P	1	1	1	1				
10-1	1	772527-96100-1	FORK ASSY, PALLET		1	1	1			S	
		(B=M/# 53661)	(C=M/# 52605) (D=M/# 53001)								
11	2	172527-96100-3	FORK ASSY, PALLET	1	1	1	1				
11-1	2	172527-96100-4	FORK ASSY, PALLET		1	1	1			S	
		(B=M/# 53661)	(C=M/# 52605) (D=M/# 53001)								
12	2	172511-96250-3	PLATE, SIDE	2	2	2	2				
12-1	2	172511-96250-4	PLATE, SIDE		2	2	2			S	
		(B=M/# 53661)	(C=M/# 52605) (D=M/# 53001)								
13	2	172520-96830-3	FORK ASSY	2	2	2	2				
13-1	2	172520-96830-4	FORK ASSY		2	2	2			S	
		(B=M/# 53661)	(C=M/# 52605) (D=M/# 53001)								
15	3	981085-91230	LEVER	2	2	2	2				
16	3	981085-91240	PIN, FORK	2	2	2	2				
17	3	981085-91250	SPRING	2	2	2	2				
18	2	26013-120252	BOLT, M12X 25	8	8	8	8				

N:Old $\xleftrightarrow[\text{No}]{\text{Yes}}$ New, Q:Old $\xleftrightarrow[\text{Yes}]{\text{No}}$ New, R:Old $\xleftrightarrow[\text{Yes}]{\text{Yes}}$ New, S:Old $\xleftrightarrow[\text{No}]{\text{No}}$ New, W:Add, Z:Discontinued, F:Interchangeable by set, K:Q'ty Change

Copyright (C) YANMAR CO., LTD. All RightsReserved.

Fig.67. WINDOW WASHER(OPTIONAL)

(A)=V3-5A
(B)=V3-5B
(C)=V4-5B
(D)=V5-B
(E)=
(F)=

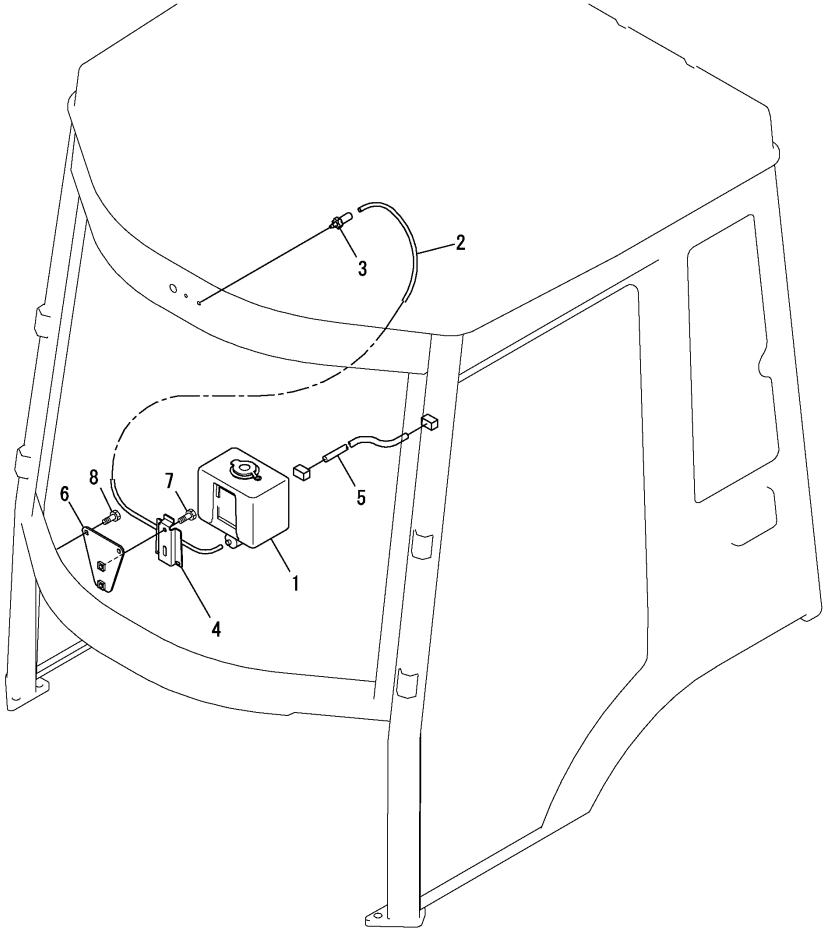

No.	Lev.	Parts No.	Description	Q'ty (A)	(B)	(C)	(D)	(E)	(F)	I	R
1	1	172527-17910	TANK, WASHER	1	1	1	1				
2	1	172527-17920	HOSE	1	1	1	1				
3	1	172527-17930	NOZZLE, WASHER	1	1	1	1				
4	1	172527-17940	BRACKET	1	1	1	1				
5	1	172527-17950	HARNESS, WIRE	1	1	1	1				
6	1	172527-69590	STAY, TANK	1	1	1	1				
7	1	172527-69650	BOLT M6X16	2	2	2	2				
8	1	26018-060162	BOLT, M6X 16	2	2	2	2				

N:Old $\xleftrightarrow[\text{No}]{\text{Yes}}$ New, Q:Old $\xleftrightarrow[\text{Yes}]{\text{No}}$ New, R:Old $\xleftrightarrow[\text{Yes}]{\text{Yes}}$ New, S:Old $\xleftrightarrow[\text{No}]{\text{No}}$ New, W:Add, Z:Discontinued, F:Interchangeable by set, K:Q'ty Change

Copyright (C) YANMAR CO., LTD. All RightsReserved.

Fig.68. TOOL(OPTIONAL)

P/C NEWS No:Y00K3961-4
PUBLISHED:2007/8

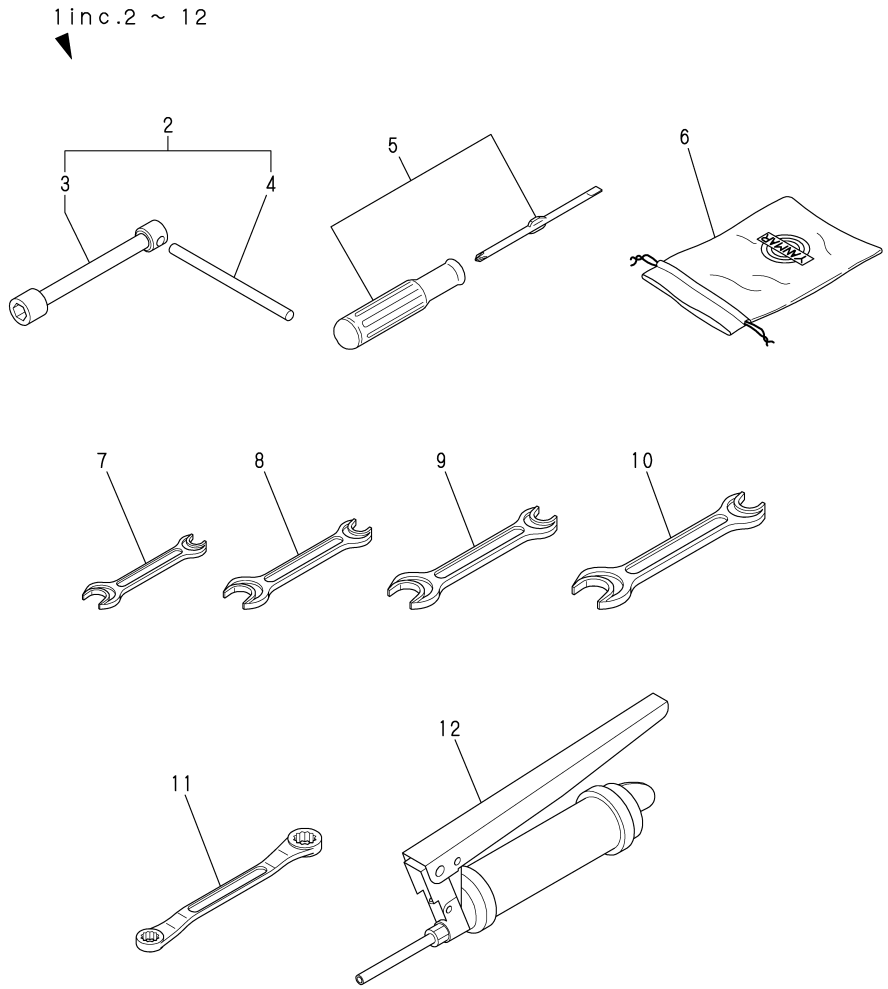

(A)=V3-5A (D)=V5-B
(B)=V3-5B (E)=
(C)=V4-5B (F)=

No.	Lev.	Parts No.	Description	Q'ty (A)	(B)	(C)	(D)	(E)	(F)	I	R
1	1	772527-05100	TOOL ASSY	1	1	1	1				
2	2	172527-05110	WRENCH ASSY 30	1	1	1	1				
3	3	172527-05120	WRENCH 30	1	1	1	1				
4	3	172527-05130	SHAFT, WRENCH	1	1	1	1				
5	2	104200-92350	DRIVER, SCREW	1	1	1	1				
6	2	121400-92690	BAG, TOOL	1	1	1	1				
7	2	28110-100120	SPANNER, 10X12	1	1	1	1				
8	2	28110-120140	SPANNER, 12X14	1	1	1	1				
9	2	28110-190220	SPANNER, 19X22	1	1	1	1				
10	2	28110-220240	SPANNER, 22X24	1	1	1	1				
11	2	28160-140170	WRENCH, 14X17	1	1	1	1				
12	2	933110-09800	GUN, GREASE	1	1	1	1				

N:Old $\xleftarrow[\text{No}]{\text{Yes}}$ New, Q:Old $\xleftarrow[\text{Yes}]{\text{No}}$ New, R:Old $\xleftarrow[\text{Yes}]{\text{Yes}}$ New, S:Old $\xleftarrow[\text{No}]{\text{No}}$ New, W:Add, Z:Discontinued, F:Interchangeable by set, K:Q'ty Change

Copyright (C) YANMAR CO., LTD. All RightsReserved.

Fig.69. UNIQUE TIRE(OPTIONAL)

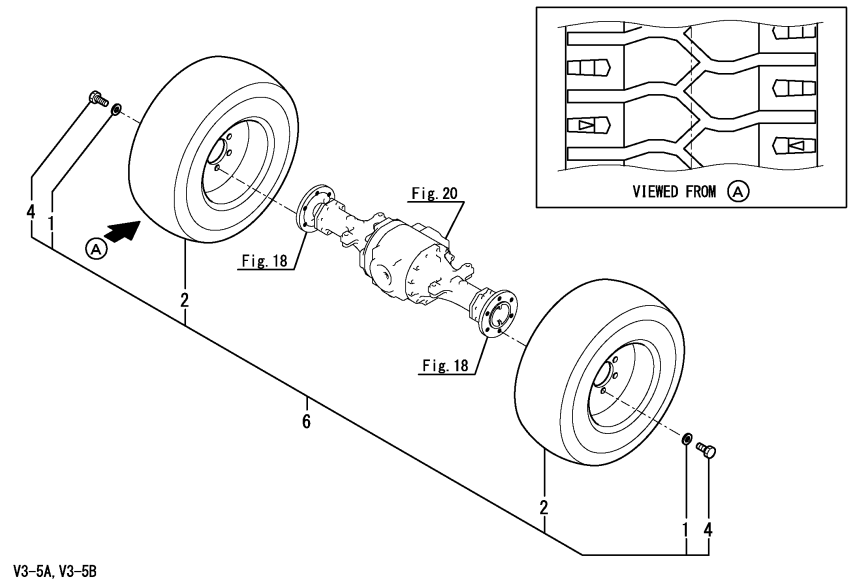

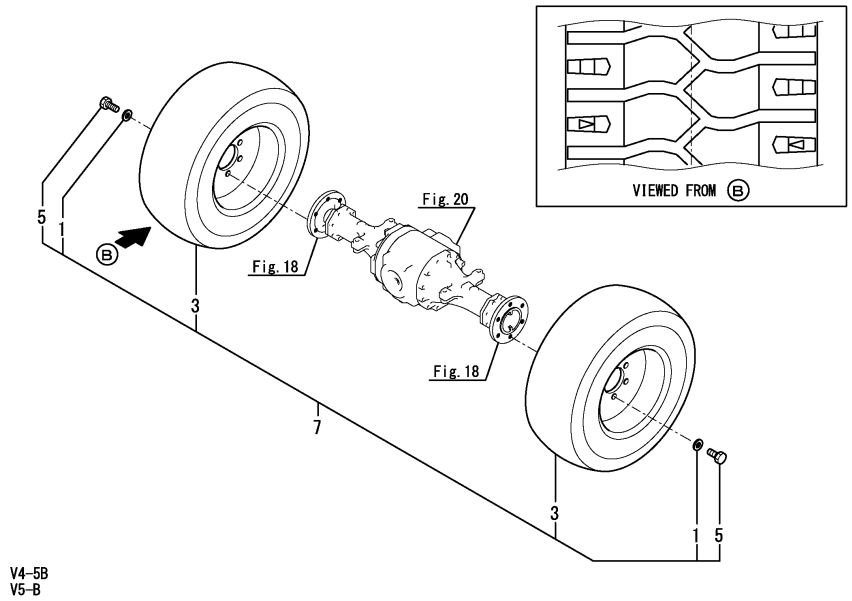

Remarks
(1)Include No.1, 2 & 4.
(2)Include No.1, 3 & 5.

(A)=V3-5A (D)=V5-B
(B)=V3-5B (E)=
(C)=V4-5B (F)=

No.	Lev.	Parts No.	Description	Q'ty (A)	(B)	(C)	(D)	(E)	(F)	I	R
1	1	172520-31210	WASHER	24	24	24	24				
2	1	172527-35210	TIRE ASSY, UNIQUE	4	4						
3	1	172528-35210	TIRE, UNIQUE			4	4				
4	1	26156-200352	BOLT, M20X 35 PLATED	24	24						
5	1	26156-200402	BOLT, M20X 40 PLATED			24	24				
6	1	172538-08560	TIRE KIT, NO-PUNC	1	1						1
7	1	172539-08560	TIRE KIT, NO-PUNC			1	1				2

N:Old $\frac{\text{Yes}}{\text{No}}$ New, Q:Old $\frac{\text{No}}{\text{Yes}}$ New, R:Old $\frac{\text{Yes}}{\text{Yes}}$ New, S:Old $\frac{\text{No}}{\text{No}}$ New, W:Add, Z:Discontinued, F:Interchangeable by set, K:Q'ty Change

Copyright (C) YANMAR CO., LTD. All RightsReserved.

Fig.77. BUCKET(0.5) KIT(OPTIONAL)

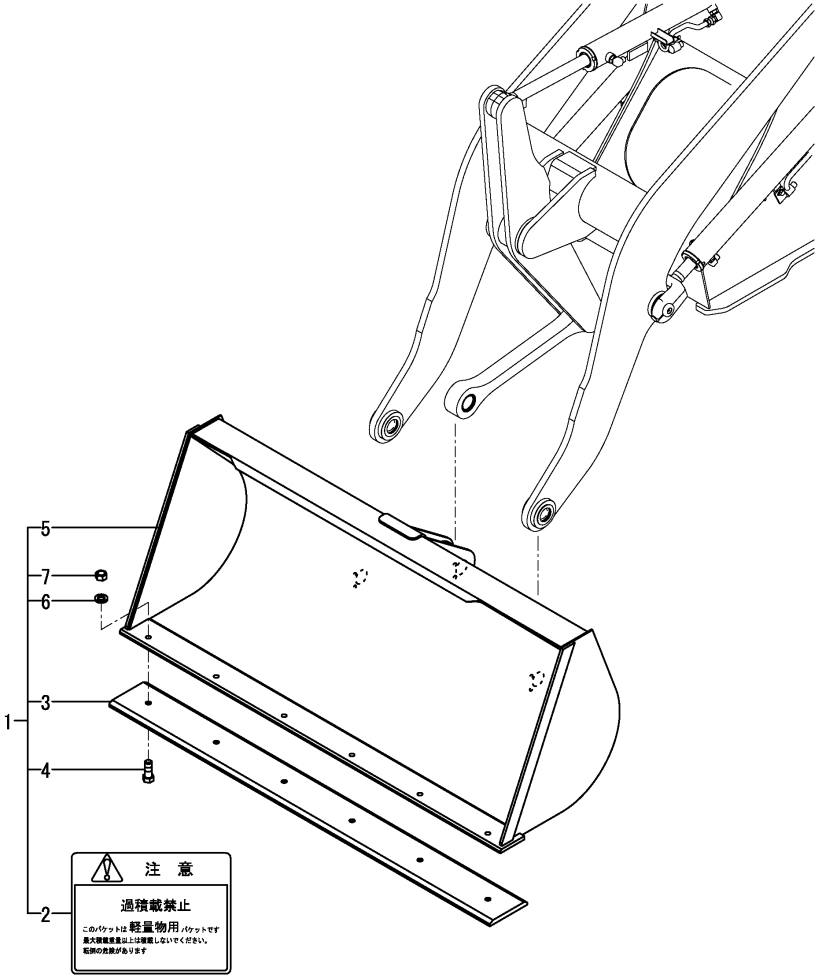

(A)=V3-5A
(B)=V3-5B
(C)=V4-5B
(D)=V5-B
(E)=
(F)=

No.	Lev.	Parts No.	Description	Q'ty (A)	(B)	(C)	(D)	(E)	(F)	I	R
1	1	172538-08410	BUCKET KIT	1	1						
2	2	172519-03360	LABEL	1	1						
3	2	172527-91390-2	CRAW	1	1						
4	2	172524-91520	BOLT M14X 35 PLATED	6	6						
5	2	172527-91700-1	BUCKET ASSY	1	1						
6	2	22217-140000	WASHER, SPRING 14	6	6						
7	2	26736-140002	NUT, M14	6	6						

N:Old ◄Yes/No► New, Q:Old ◄No/Yes► New, R:Old ◄Yes/Yes► New, S:Old ◄No/No► New, W:Add, Z:Discontinued, F:Interchangeable by set, K:Q'ty Change

Copyright (C) YANMAR CO., LTD. All RightsReserved.

Fig.78. BUCKET(0.6)KIT(OPTIONAL)

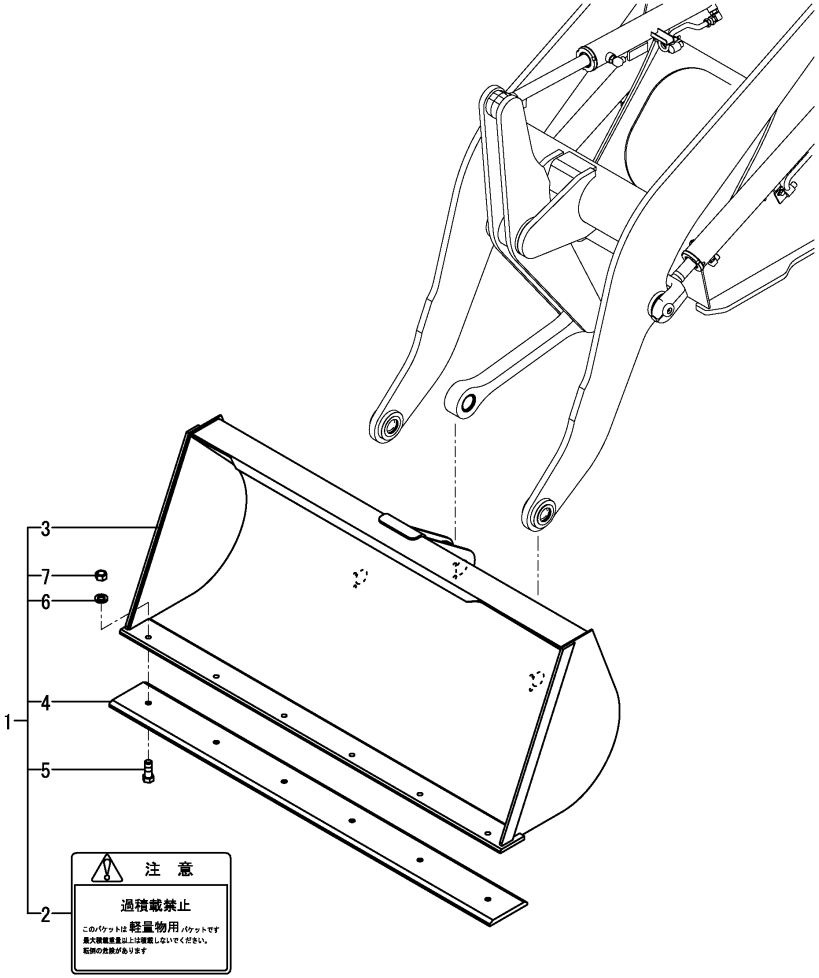

(A)=V3-5A
(B)=V3-5B
(C)=V4-5B
(D)=V5-B
(E)=
(F)=

No.	Lev.	Parts No.	Description	Q'ty (A)	(B)	(C)	(D)	(E)	(F)	I	R
1	1	172538-08420	BUCKET KIT	1	1						
2	2	172519-03360	LABEL	1	1						
3	2	172527-91900-1	BUCKET ASSY	1	1						
4	2	172527-91390-2	CRAW	1	1						
5	2	172524-91520	BOLT M14X 35 PLATED	6	6						
6	2	22217-140000	WASHER, SPRING 14	6	6						
7	2	26736-140002	NUT, M14	6	6						

N:Old $\overset{\text{Yes}}{\underset{\text{No}}{\leftrightarrows}}$ New, Q:Old $\overset{\text{No}}{\underset{\text{Yes}}{\leftrightarrows}}$ New, R:Old $\overset{\text{Yes}}{\underset{\text{Yes}}{\leftrightarrows}}$ New, S:Old $\overset{\text{No}}{\underset{\text{No}}{\leftrightarrows}}$ New, W:Add, Z:Discontinued, F:Interchangeable by set, K:Q'ty Change

Copyright (C) YANMAR CO., LTD. All RightsReserved.

Fig.79. BUCKET(0.8)KIT(OPTIONAL)

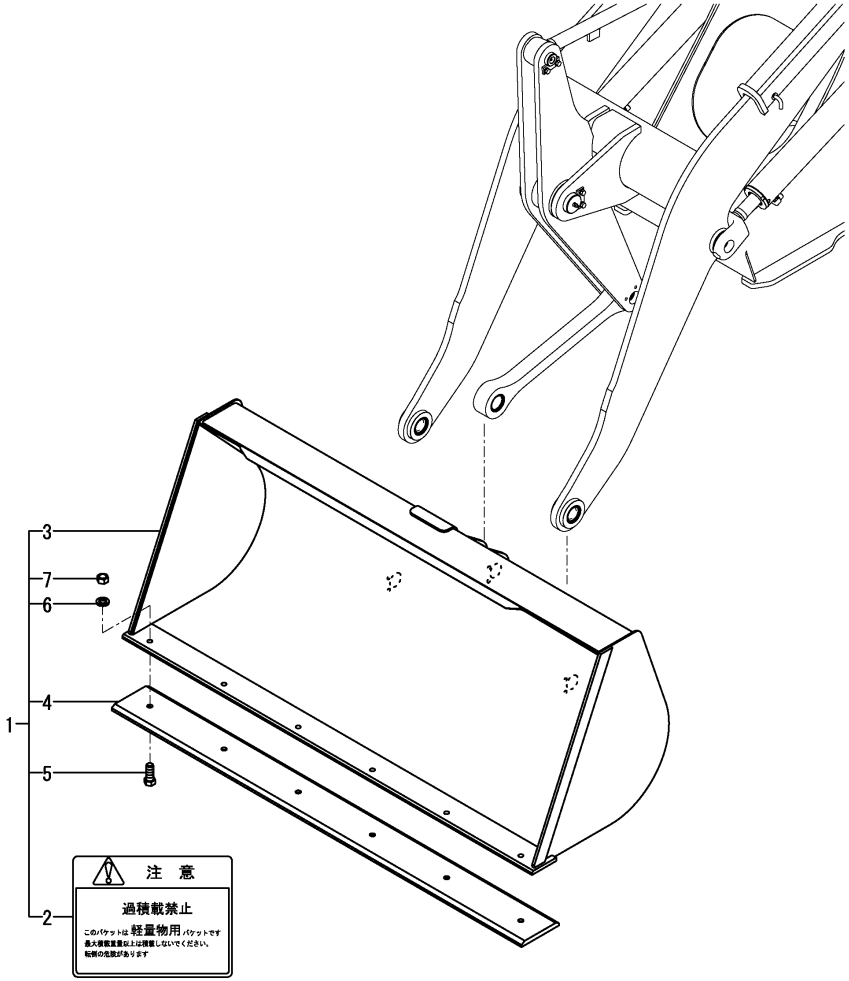

(A)=V3-5A
(B)=V3-5B
(C)=V4-5B
(D)=V5-B
(E)=
(F)=

No.	Lev.	Parts No.	Description	Q'ty (A)	(B)	(C)	(D)	(E)	(F)	I	R
1	1	172539-08410	BUCKET KIT			1					
2	2	172519-03360	LABEL			1					
3	2	172528-91700-1	BUCKET ASSY			1					
4	2	172528-91390-1	CRAW			1					
5	2	172524-91520	BOLT M14X 35 PLATED			6					
6	2	22217-140000	WASHER, SPRING 14			6					
7	2	26736-140002	NUT, M14			6					

N:Old $\frac{\text{Yes}}{\text{No}}$ New, Q:Old $\frac{\text{No}}{\text{Yes}}$ New, R:Old $\frac{\text{Yes}}{\text{Yes}}$ New, S:Old $\frac{\text{No}}{\text{No}}$ New, W:Add, Z:Discontinued, F:Interchangeable by set, K:Q'ty Change

Copyright (C) YANMAR CO., LTD. All RightsReserved.

Fig.80. BUCKET(0.9) KIT(OPTIONAL)

(A)=V3-5A
(B)=V3-5B
(C)=V4-5B
(D)=V5-B
(E)=
(F)=

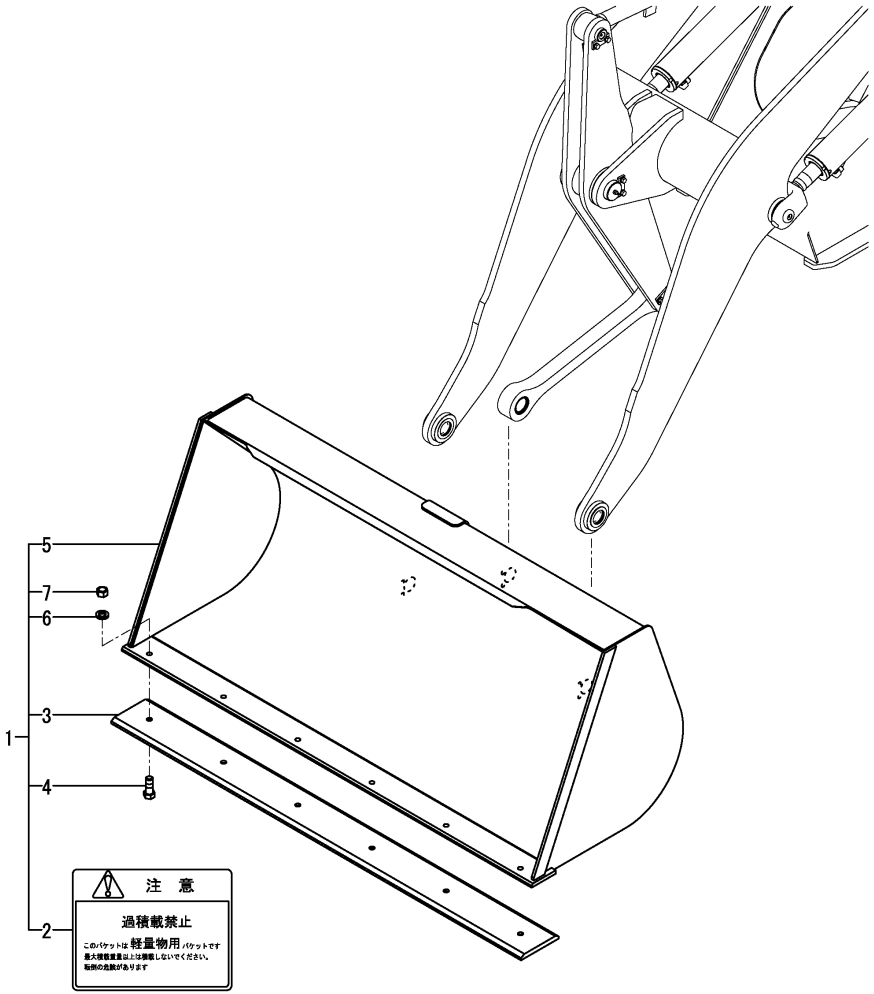

No.	Lev.	Parts No.	Description	Q'ty (A)	(B)	(C)	(D)	(E)	(F)	I	R
1	1	172543-08410	BUCKET KIT				1				
2	2	172519-03360	LABEL				1				
3	2	172528-91390-1	CRAW				1				
4	2	172524-91520	BOLT M14X 35 PLATED				6				
5	2	172529-91700-1	BUCKET ASSY				1				
6	2	22217-140000	WASHER, SPRING 14				6				
7	2	26736-140002	NUT, M14				6				

N:Old $\xleftarrow[\text{No}]{\text{Yes}}$ New, Q:Old $\xleftarrow[\text{Yes}]{\text{No}}$ New, R:Old $\xleftarrow[\text{Yes}]{\text{Yes}}$ New, S:Old $\xleftarrow[\text{No}]{\text{No}}$ New, W:Add, Z:Discontinued, F:Interchangeable by set, K:Q'ty Change

Copyright (C) YANMAR CO., LTD. All RightsReserved.

Fig.81. BUCKET(0.6)(PLATING)KIT(OPTIONAL)

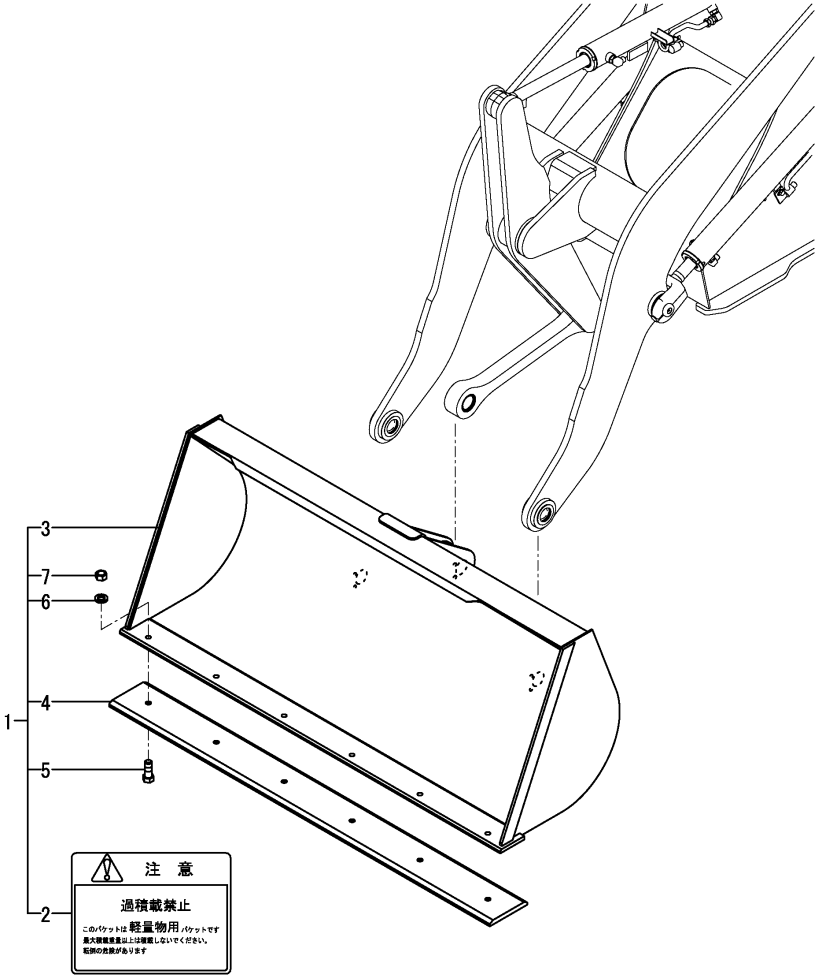

(A)=V3-5A
(B)=V3-5B
(C)=V4-5B
(D)=V5-B
(E)=
(F)=

No.	Lev.	Parts No.	Description	Q'ty (A)	(B)	(C)	(D)	(E)	(F)	I	R
1	1	172538-08510	BUCKET KIT	1	1						
2	2	172519-03360	LABEL	1	1						
3	2	172527-91201	BUCKET ASSY	1	1						
4	2	172527-91390-3	EDGE 1570	1	1						
5	2	172524-91520	BOLT M14X 35 PLATED	6	6						
6	2	22217-140000	WASHER, SPRING 14	6	6						
7	2	26736-140002	NUT, M14	6	6						

N:Old $\xleftrightarrow[\text{No}]{\text{Yes}}$ New, Q:Old $\xleftrightarrow[\text{Yes}]{\text{No}}$ New, R:Old $\xleftrightarrow[\text{Yes}]{\text{Yes}}$ New, S:Old $\xleftrightarrow[\text{No}]{\text{No}}$ New, W:Add, Z:Discontinued, F:Interchangeable by set, K:Q'ty Change

Copyright (C) YANMAR CO., LTD. All RightsReserved.

Fig.82. BUCKET(0.8)(PLATING) KIT(OPTIONAL)

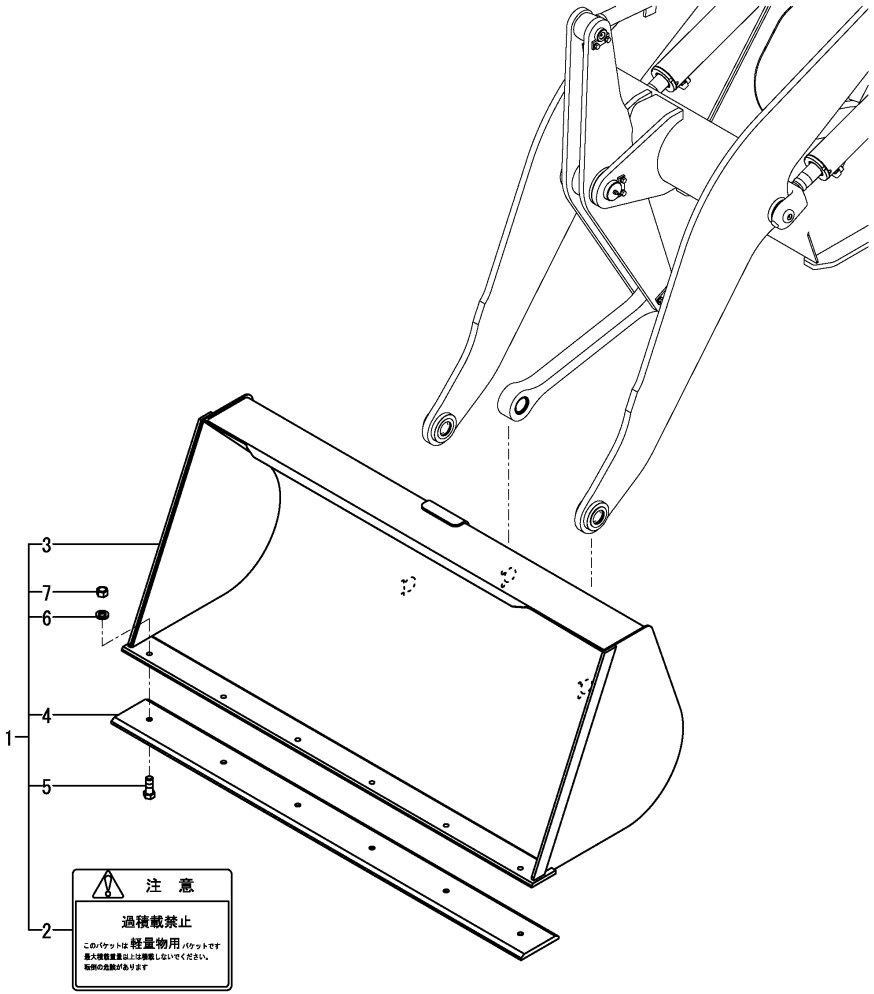

(A)=V3-5A (D)=V5-B
(B)=V3-5B (E)=
(C)=V4-5B (F)=

No.	Lev.	Parts No.	Description	Q'ty (A)	(B)	(C)	(D)	(E)	(F)	I	R
1	1	172539-08510	BUCKET KIT,0.8 M			1					
2	2	172519-03360	LABEL			1					
3	2	172528-91201-2	BUCKET ASSY			1					
4	2	172528-91390-2	EDGE 1690			1					
5	2	172524-91520	BOLT, M14X35			6					
6	2	22217-140000	WASHER, 14			6					
7	2	26736-140002	NUT, 14			6					

N:Old $\frac{\text{Yes}}{\text{No}}$ New, Q:Old $\frac{\text{No}}{\text{Yes}}$ New, R:Old $\frac{\text{Yes}}{\text{Yes}}$ New, S:Old $\frac{\text{No}}{\text{No}}$ New, W:Add, Z:Discontinued, F:Interchangeable by set, K:Q'ty Change

Copyright (C) YANMAR CO., LTD. All RightsReserved.

Fig.83. BUCKET(0.9)(PLATING) KIT(OPTIONAL)

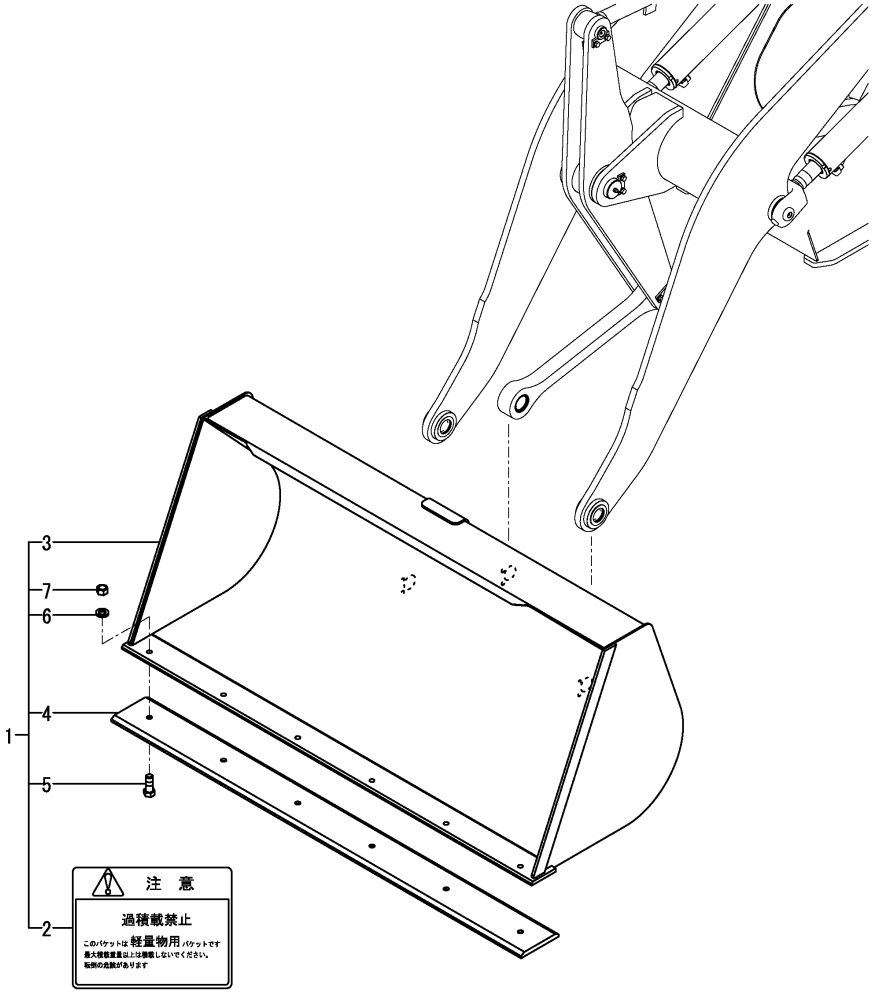

(A)=V3-5A (D)=V5-B
(B)=V3-5B (E)=
(C)=V4-5B (F)=

No.	Lev.	Parts No.	Description	Q'ty (A)	(B)	(C)	(D)	(E)	(F)	I	R
1	1	172543-08510	BUCKET KIT				1				
2	2	172519-03360	LABEL				1				
3	2	172529-91201-2	BUCKET ASSY				1				
4	2	172528-91390-2	CRAW				1				
5	2	172524-91520	BOLT M14X 35 PLATED				6				
6	2	22217-140000	WASHER, SPRING 14				6				
7	2	26736-140002	NUT, M14				6				

N:Old $\xleftrightarrow[\text{No}]{\text{Yes}}$ New, Q:Old $\xleftrightarrow[\text{Yes}]{\text{No}}$ New, R:Old $\xleftrightarrow[\text{Yes}]{\text{Yes}}$ New, S:Old $\xleftrightarrow[\text{No}]{\text{No}}$ New, W:Add, Z:Discontinued, F:Interchangeable by set, K:Q'ty Change

Copyright (C) YANMAR CO., LTD. All RightsReserved.

Fig.84. BUCKET(0.4)(QUICK HOLDER) KIT(OPTIONAL)

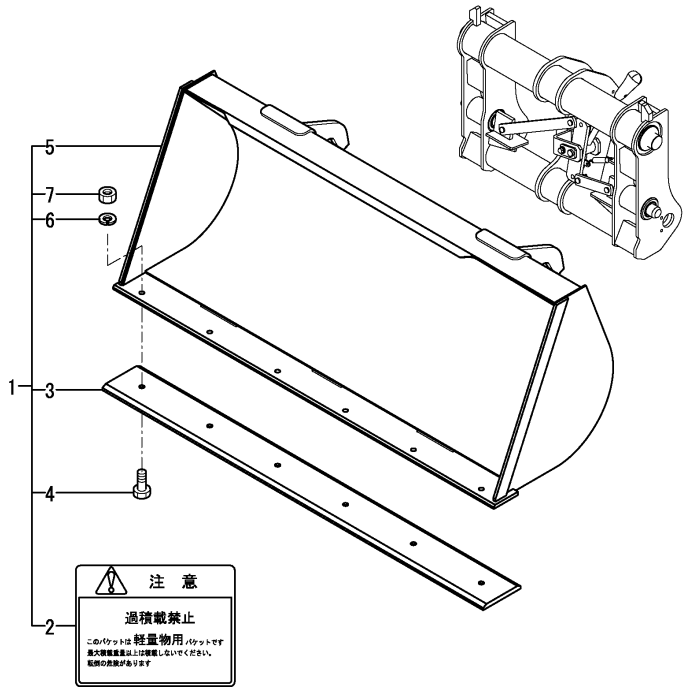

(A)=V3-5A (D)=V5-B
(B)=V3-5B (E)=
(C)=V4-5B (F)=

No.	Lev.	Parts No.	Description	Q'ty (A)	(B)	(C)	(D)	(E)	(F)	I	R
1	1	172538-08450	BUCKET KIT,0.4 Q	1	1						
2	2	172519-03360	LABEL	1	1						
3	2	172527-91390-2	CRAW	1	1						
4	2	172524-91520	BOLT, M14X35	6	6						
5	2	172527-96400-1	BUCKET ASSY	1	1						
6	2	22217-140000	WASHER, 14	6	6						
7	2	26736-140002	NUT, 14	6	6						

N:Old $\frac{\text{Yes}}{\text{No}}$ New, Q:Old $\frac{\text{No}}{\text{Yes}}$ New, R:Old $\frac{\text{Yes}}{\text{Yes}}$ New, S:Old $\frac{\text{No}}{\text{No}}$ New, W:Add, Z:Discontinued, F:Interchangeable by set, K:Q'ty Change

Copyright (C) YANMAR CO., LTD. All RightsReserved.

Fig.85. BUCKET(0.5)(QUICK HOLDER) KIT(OPTIONAL)

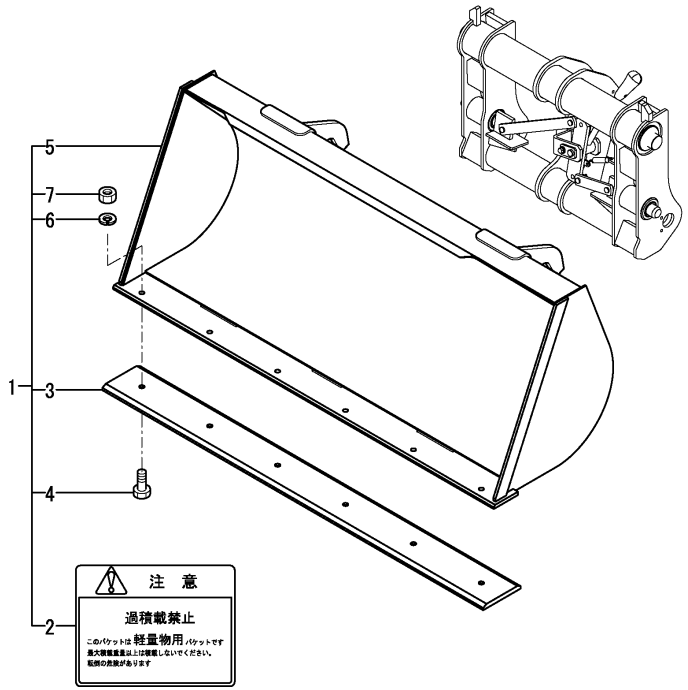

(A)=V3-5A (D)=V5-B
(B)=V3-5B (E)=
(C)=V4-5B (F)=

No.	Lev.	Parts No.	Description	Q'ty (A)	(B)	(C)	(D)	(E)	(F)	I	R
1	1	172538-08460	BUCKET KIT,0.5 Q	1	1						
2	2	172519-03360	LABEL	1	1						
3	2	172527-91390-2	CRAW	1	1						
4	2	172524-91520	BOLT, M14X35	6	6						
5	2	172527-96500-1	BUCKET ASSY	1	1						
6	2	22217-140000	WASHER, 14	6	6						
7	2	26736-140002	NUT, 14	6	6						

N:Old $\overset{\text{Yes}}{\underset{\text{No}}{\leftrightarrows}}$ New, Q:Old $\overset{\text{No}}{\underset{\text{Yes}}{\leftrightarrows}}$ New, R:Old $\overset{\text{Yes}}{\underset{\text{Yes}}{\leftrightarrows}}$ New, S:Old $\overset{\text{No}}{\underset{\text{No}}{\leftrightarrows}}$ New, W:Add, Z:Discontinued, F:Interchangeable by set, K:Q'ty Change

Copyright (C) YANMAR CO., LTD. All RightsReserved.

Fig.86. BUCKET(0.6)(QUICK HOLDER) KIT(OPTIONAL)

(A)=V3-5A
(B)=V3-5B
(C)=V4-5B
(D)=V5-B
(E)=
(F)=

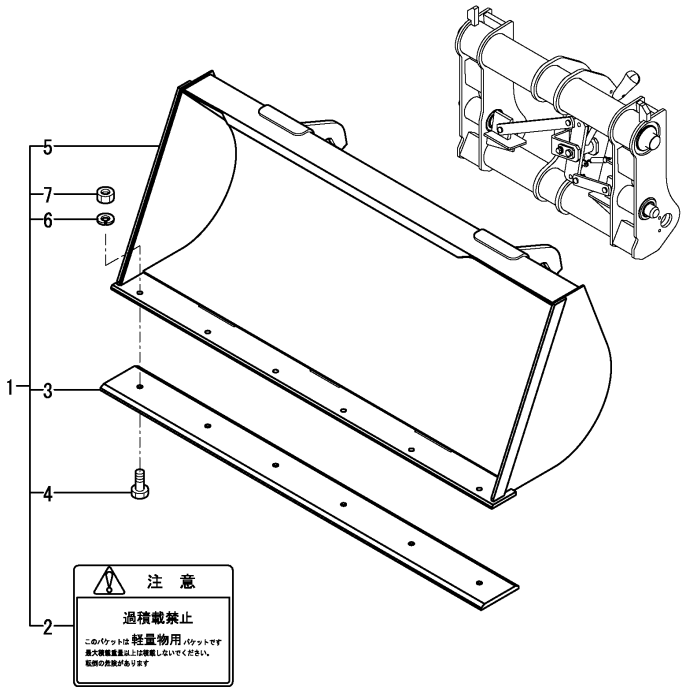

No.	Lev.	Parts No.	Description	Q'ty (A)	(B)	(C)	(D)	(E)	(F)	I	R
1	1	172538-08470	BUCKET KIT	1	1						
2	2	172519-03360	LABEL	1	1						
3	2	172527-91390-2	CRAW	1	1						
4	2	172524-91520	BOLT M14X 35 PLATED	6	6						
5	2	172527-96600-1	BUCKET ASSY	1	1						
6	2	22217-140000	WASHER, SPRING 14	6	6						
7	2	26736-140002	NUT, M14	6	6						

N:Old ◄Yes/No► New, Q:Old ◄No/Yes► New, R:Old ◄Yes/Yes► New, S:Old ◄No/No► New, W:Add, Z:Discontinued, F:Interchangeable by set, K:Q'ty Change

Copyright (C) YANMAR CO., LTD. All RightsReserved.

Fig.87. BUCKET(0.5)(QUICK HOLDER)KIT(OPTIONAL)

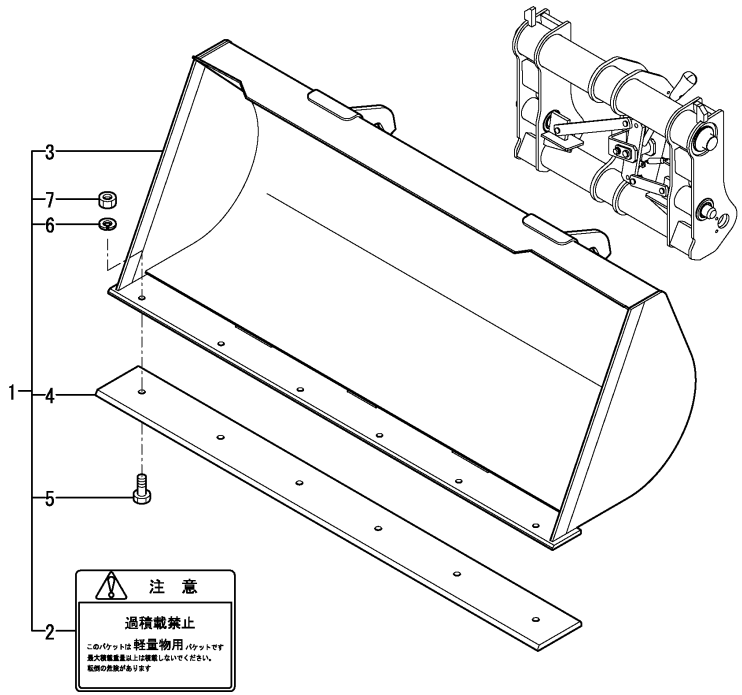

(A)=V3-5A (D)=V5-B
(B)=V3-5B (E)=
(C)=V4-5B (F)=

No.	Lev.	Parts No.	Description	Q'ty (A)	(B)	(C)	(D)	(E)	(F)	I	R
1	1	172539-08450	BUCKET KIT			1					
2	2	172519-03360	LABEL			1					
3	2	172528-96400-1	BUCKET ASSY			1					
4	2	172528-91390-1	CRAW			1					
5	2	172524-91520	BOLT M14X 35 PLATED			6					
6	2	22217-140000	WASHER, SPRING 14			6					
7	2	26736-140002	NUT, M14			6					

N:Old $\frac{\text{Yes}}{\text{No}}$ New, Q:Old $\frac{\text{No}}{\text{Yes}}$ New, R:Old $\frac{\text{Yes}}{\text{Yes}}$ New, S:Old $\frac{\text{No}}{\text{No}}$ New, W:Add, Z:Discontinued, F:Interchangeable by set, K:Q'ty Change

Copyright (C) YANMAR CO., LTD. All RightsReserved.

Fig.88. BUCKET(0.6)(QUICK HOLDER) KIT(OPTIONAL)

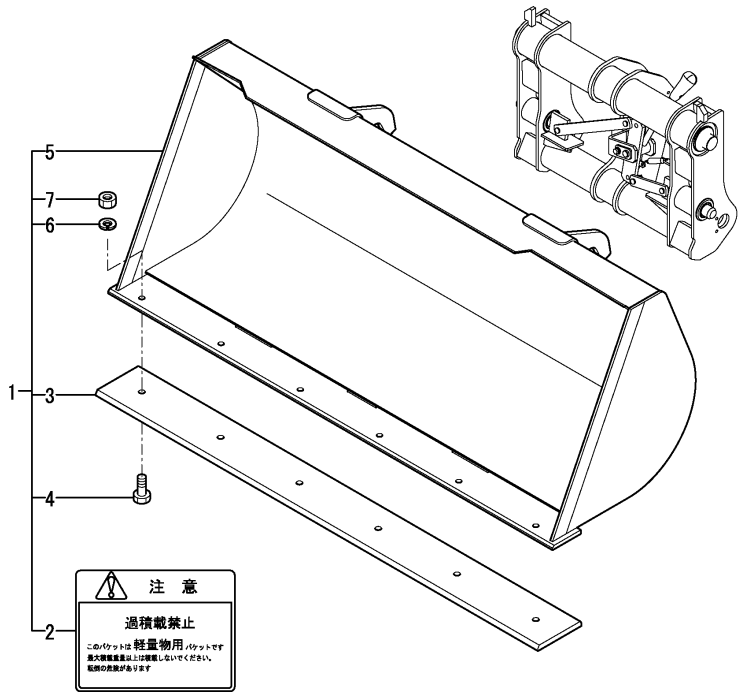

(A)=V3-5A (D)=V5-B
(B)=V3-5B (E)=
(C)=V4-5B (F)=

No.	Lev.	Parts No.	Description	Q'ty (A)	(B)	(C)	(D)	(E)	(F)	I	R
1	1	172543-08450	BUCKET KIT				1				
2	2	172519-03360	LABEL				1				
3	2	172528-91390-1	CRAW				1				
4	2	172524-91520	BOLT M14X 35 PLATED				6				
5	2	172529-96400-1	BUCKET ASSY				1				
6	2	22217-140000	WASHER, SPRING 14				6				
7	2	26736-140002	NUT, M14				6				

N:Old $\xleftrightarrow[\text{No}]{\text{Yes}}$ New, Q:Old $\xleftrightarrow[\text{Yes}]{\text{No}}$ New, R:Old $\xleftrightarrow[\text{Yes}]{\text{Yes}}$ New, S:Old $\xleftrightarrow[\text{No}]{\text{No}}$ New, W:Add, Z:Discontinued, F:Interchangeable by set, K:Q'ty Change

Copyright (C) YANMAR CO., LTD. All RightsReserved.

Fig.89. BUCKET(0.8)(QUICK HOLDER) KIT(OPTIONAL)

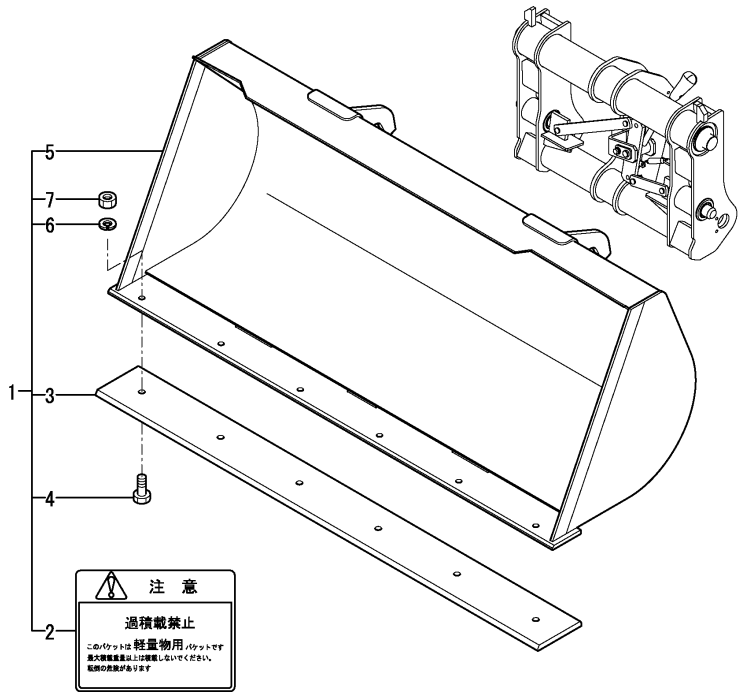

(A)=V3-5A (D)=V5-B
(B)=V3-5B (E)=
(C)=V4-5B (F)=

No.	Lev.	Parts No.	Description	Q'ty (A)	(B)	(C)	(D)	(E)	(F)	I	R
1	1	172539-08460	BUCKET KIT,0.8 Q			1					
2	2	172519-03360	LABEL			1					
3	2	172528-91390-1	CRAW			1					
4	2	172524-91520	BOLT, M14X35			6					
5	2	172528-96500-1	BUCKET ASSY			1					
6	2	22217-140000	WASHER, 14			6					
7	2	26736-140002	NUT, 14			6					

N:Old $\xleftrightarrow[\text{No}]{\text{Yes}}$ New, Q:Old $\xleftrightarrow[\text{Yes}]{\text{No}}$ New, R:Old $\xleftrightarrow[\text{Yes}]{\text{Yes}}$ New, S:Old $\xleftrightarrow[\text{No}]{\text{No}}$ New, W:Add, Z:Discontinued, F:Interchangeable by set, K:Q'ty Change

Copyright (C) YANMAR CO., LTD. All RightsReserved.

Fig.90. BUCKET(0.9)(QUICK HOLDER) KIT(OPTIONAL)

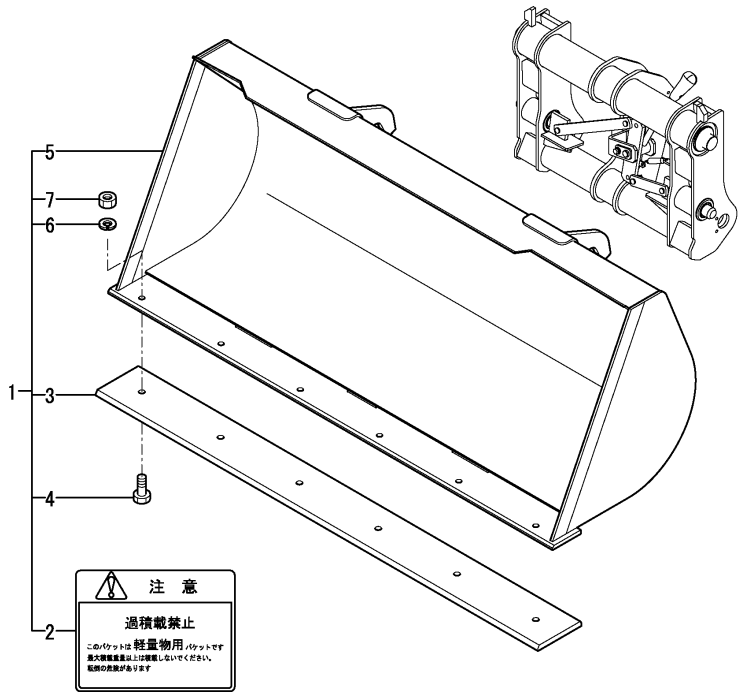

(A)=V3-5A (D)=V5-B
(B)=V3-5B (E)=
(C)=V4-5B (F)=

No.	Lev.	Parts No.	Description	Q'ty (A)	(B)	(C)	(D)	(E)	(F)	I	R
1	1	172543-08460	BUCKET KIT,0.9 Q				1				
2	2	172519-03360	LABEL				1				
3	2	172528-91390-1	CRAW				1				
4	2	172524-91520	BOLT, M14X35				6				
5	2	172529-96500-1	BUCKET ASSY				1				
6	2	22217-140000	WASHER, 14				6				
7	2	26736-140002	NUT, 14				6				

N:Old $\xleftrightarrow[\text{No}]{\text{Yes}}$ New, Q:Old $\xleftrightarrow[\text{Yes}]{\text{No}}$ New, R:Old $\xleftrightarrow[\text{Yes}]{\text{Yes}}$ New, S:Old $\xleftrightarrow[\text{No}]{\text{No}}$ New, W:Add, Z:Discontinued, F:Interchangeable by set, K:Q'ty Change

Copyright (C) YANMAR CO., LTD. All RightsReserved.

Parts No. Index

Parts No.	Fig. No.	Ref. No.
101504-55101	9	6
103954-13201	4	27
104200-92350	68	5
119247-77100	12	51
	13	2
119643-66900	12	50
	13	9
119650-77910	12	54
119802-55710	9	18
119808-12520	5	8
119808-12540	5	9
119869-13501	4	12
121120-13580	4	3
121250-49121	8	28 A
121400-92690	68	6
121450-44531	8	19
121450-49100	8	26
121450-49110	8	25
121468-44510	8	17
121468-44540	8	20
121470-44540	8	24
121470-44581	8	22
121855-12060	5	4
124450-44560	8	21
124617-91920	12	27
124701-11911	4	11
124766-59050	8	29
	9	21
124970-77920	12	58
129012-12500	5	5
129012-12510	5	6
129012-12530	5	7
129012-13500	4	12 A
129100-55690	9	15
129107-44590	8	16
129126-44570	8	50
129211-77920	12	57
129400-13201	4	11 A
129612-52100	12	53
160970-77350	12	52
172020-10620	62	16
172110-76170-4	59	3
	60	5
172112-77361	58	29
172113-12522	6	27
172116-16310-1	10	15
172116-75850-8	55	6
172120-14660	8	12 A
172122-14301	9	3
172122-14350	9	4

Parts No.	Fig. No.	Ref. No.
172122-14620	9	11
172122-45830	28	11
172122-46571	29	14
	30	3
172122-76131	58	5
172122-79930	11	21
172122-79940	11	22
172123-76121	58	4
172124-14650	8	14
172137-14620	8	13
	9	10
172137-16560	11	17
172137-72431	47	7
172137-72453	45	14
	46	10
	47	8
172141-03182	1	8
	2	7
172141-03202	1	11
	2	6
172141-03360	1	32
172141-14610	8	13 -1
	9	12
172141-14620	9	13
172141-41340	28	1
	32	2
	33	2
172141-71520	70	77
	71	77
172141-71550	70	78
	71	79
172141-71560	70	79
	71	80
172141-72190	45	20 B
	46	22 B
172141-72250	45	12 A
	46	9 A
172141-72420	45	20 A
	46	22 A
172141-72540	45	17
	46	13
172141-72580	47	11
172141-73230	70	97
	71	98
172141-73240	70	90
		98
	71	91
		99
172141-76180	58	8
		11

Parts No.	Fig. No.	Ref. No.
172141-76900	56	16
172141-84610	47	25
172141-84620	47	26
172142-03302	1	33
	2	8
172142-72560	47	21 A
172142-74600	70	36
		65
	71	36
		65
172142-74660	70	37
		66
	71	37
		66
172142-76181	56	15
	58	56
172143-72400	45	17 A
	46	13 A
172148-72050	45	11 B
	46	8 B
172148-72390	45	17 B
	46	13 B
172148-72941	47	8 A
172151-76161	57	16
172155-03310	1	24
172157-76300	58	16
172162-61380	8	8
172162-61850	28	27
	32	7
	33	6
172162-73630	70	35
	71	35
172162-74870	70	68
	71	68
172164-03510	1	30
	2	5
172164-03540	1	31
	2	3
172164-65730	8	9
172164-66170	37	27
172164-66640	8	9 -1
172164-73650	72	23
	73	23
172164-73870	70	93
	71	94
172164-73880	70	101
	71	101
172164-73950	70	95
	71	96
172164-76131	56	13

Parts No.	Fig. No.	Ref. No.
172164-76131	57	8
		10
172164-81770	62	19
172165-47871	29	5
172165-73850	70	92
	71	93
172165-73870	70	94
	71	95
172168-72410	45	9
		9 A
	46	17
		20
172168-81410	61	6
	62	11
172169-03180	1	9
172171-72120	45	11
	46	8
172171-72130	45	12
	46	9
	47	11 A
172173-72352	47	7 A
172175-17120	12	101
172175-78121	57	35
172176-07330	1	39
172176-81660	61	12
	62	20
172179-73540	70	10
		34
	71	10
		34
172183-03250	1	22
172183-14640	9	13 -1
172183-76190	58	14
172187-17070	12	74
172187-17080	12	75
172187-17090	12	76
172187-17100	12	73
172187-17200	12	100
172187-17220	12	103
172210-70750	64	4
172312-46321	30	6
172312-73110	52	3
172312-73520	52	5
172312-73560	52	9
172312-73660	52	25
172312-73670	52	26
172444-03190	1	10
	2	12
172444-03200	1	12
	2	13

Parts No. Index

Parts No.	Fig. No.	Ref. No.
172444-03220	1	14
	2	11
172444-03230	1	16
	2	14
172444-03240	1	19
	2	2
172444-13210	8	25 A
172444-13220	8	26 A
172444-17660	61	11
172444-72961	45	14 B
	46	10 B
172444-78310	59	14 A
172446-45820	6	15
	26	20
	28	26
172447-72020	47	2
172447-72860	47	12
172448-72650	45	10
	46	18
		21
	61	2
	62	8
172448-75300	59	16 A
172448-81610	47	17
		20
172449-72040	47	2 A
172449-72810	47	12 A
172455-65970	8	41
172456-72050	45	2 A
	46	2 A
172456-72190	45	11 A
	46	8 A
172457-72010	45	2 B
	46	2 B
172457-72050	45	2
	46	2
172458-16550	11	3
172458-61660	32	4
	33	5
172460-72070	45	14 A
	46	10 A
172467-76120	56	12
	57	4
	58	57
172480-78970	58	48
172482-73490	70	19
	71	19
172482-73560	70	99
172482-73570	70	100
	71	100

Parts No.	Fig. No.	Ref. No.
172490-03160	1	34
172511-03230	1	17
172511-17351	12	36
172511-42190	64	3
172511-96250-3	66	2
		12
172511-96250-4	66	2 -1
		12 -1
172512-16560	11	18
172512-45160	29	4
172512-45201	29	10
172512-91210	47	24
	61	7
	62	1
172513-35161	23	5
		9
	24	4
		8
	25	4
		8
172513-52541	21	3
172515-08790	12	1
172516-35130	23	3
		7
	25	3
		7
172516-96460	64	11
172519-03341	1	26
	2	9
172519-03360	76	7
	77	2
	78	2
	79	2
	80	2
	81	2
	82	2
	83	2
	84	2
	85	2
	86	2
	87	2
	88	2
	89	2
	90	2
172519-04350	1	38
172519-73590	52	12
172519-73610	52	13
172520-11300	4	1
172520-11350	4	2
172520-12310	6	7

Parts No.	Fig. No.	Ref. No.
172520-17351	12	37
172520-17390	12	35
172520-17690	43	7
172520-26740	18	3
172520-26780	18	10
172520-31210	23	1
	24	1
	25	1
	35	29
	69	1
172520-46150	6	16
	26	10
	27	24
	33	3
172520-65151	37	14
172520-68940	42	18
		45
172520-69580	44	19
172520-69650	44	21
172520-73530	52	6
172520-73540	52	7
172520-73560	52	10
172520-73630	52	29
172520-73640	52	30
172520-73650	52	31
172520-73660	52	32
172520-73670	52	33
172520-73680	52	34
172520-73740	52	40
172520-73770	52	42
172520-75320	55	4
172520-76240	58	15
172520-77380	59	5
	60	9
172520-91210	64	6
172520-96450	64	10
172520-96460	64	12
172520-96480	64	13
172520-96710-3	65	9
172520-96710-4	65	9 -1
172520-96830-3	66	4
		13
172520-96830-4	66	4 -1
		13 -1
172521-16320	10	9
172522-35130	23	3 A
		7 A
	25	3 A
		7 A
172522-35160	24	4 A

Parts No.	Fig. No.	Ref. No.
172522-35160	24	8 A
	25	4 A
		8 A
172522-42620	27	18
172524-03290	1	23
172524-06750	3	2
172524-06900	40	1
	41	1
172524-12260	6	6
172524-12362	6	10
172524-12380	6	13
172524-13180	7	5
172524-17210	12	13
172524-17220	12	14
172524-17240	12	17
172524-17250	12	18
172524-17260	12	19
172524-17270	12	20
172524-17280	12	31
172524-17310	12	32
172524-17311	12	32 -1
172524-17320	12	33
172524-17360	12	38
172524-17380	12	34
172524-17381	12	34 -1
172524-17522	13	6
172524-17660	12	41
172524-17670	12	42
172524-17680	12	43
172524-17690	12	44
172524-17741	43	11
172524-17810	12	45
172524-17820	12	46
172524-17830	12	47
172524-33521	35	4
172524-42180	26	5
	27	9
172524-42190	27	3
	28	2
172524-42360	26	9
	27	7
172524-42520	27	14
172524-45190	29	9
172524-45250	29	13
	30	2
172524-45511	29	26
172524-45550	29	27
172524-45560	29	28
172524-45580	29	29
172524-47931	31	7

Parts No. Index

Parts No.	Fig. No.	Ref. No.
172524-47980	31	8
172524-52830	34	6
172524-52840	34	7
172524-52850	34	8
172524-52870	34	9
172524-63151	36	33
172524-65140	37	10
172524-65670	37	24
172524-65700	37	25
172524-65711	37	26
172524-65720	42	2
		33
172524-68280	44	2
172524-68290	44	3
172524-68710	40	11
		30
172524-68720	40	12
		31
172524-68781	42	5
172524-68810	42	6
172524-68830	42	9
172524-68850	42	12
172524-68930	42	43
172524-68940	42	46
172524-68950	42	48
172524-69360	42	20
		51
172524-69411	40	18
	41	81
172524-69411-2	40	18 -1
	41	81 -1
172524-69600	43	23
172524-72420	47	22
172524-73512	52	1
172524-73522	52	2
172524-73530	52	4
172524-73540	52	21
172524-73550	52	8
172524-73571	52	11
172524-73582	52	15
172524-73590	52	35
172524-73610	52	27
172524-73620	52	28
172524-73640	52	24
172524-73650	52	14
172524-73750	52	41
172524-73780	52	22
172524-73790	52	23
172524-75190	55	3
172524-76110	56	11

Parts No.	Fig. No.	Ref. No.
172524-76210	57	5
172524-76230	57	7
172524-76801	57	21
	58	36
172524-76810	57	22
	58	40
172524-78150	59	9
	60	11
172524-78170	59	10
	60	12
172524-91520	63	6
	74	4
	75	4
	76	4
	77	4
	78	5
	79	5
	80	4
	81	5
	82	5
	83	5
	84	4
	85	4
	86	4
	87	5
	88	4
	89	4
	90	4
172527-03110	1	2
172527-03120	1	3
172527-03130	1	4
172527-03140	1	5
172527-03170	1	7
172527-03180	1	6
172527-03181	1	6 -1
172527-03210	1	13
	2	1
172527-03220	1	15
	2	4
172527-03230	1	18
	2	15
172527-03240	1	21
	2	10
172527-03310	1	25
172527-03340	1	20
172527-05110	68	2
172527-05120	68	3
172527-05130	68	4
172527-06510	3	1
172527-06510-1	3	1 -1

Parts No.	Fig. No.	Ref. No.
172527-06610	3	5
172527-06610-1	3	5 -1
172527-08500	8	46
172527-11310	4	8
172527-11320	4	9
172527-11330	4	10
172527-11340	4	23
172527-11490	4	28
172527-11512	5	21
172527-11560	5	1
172527-11570	5	2
172527-11580	5	3
172527-11910	5	14
172527-11920	5	15
172527-11931	5	22
172527-12200	6	1
172527-12251	6	4
172527-13130	7	1
172527-13140	7	2
172527-13150	7	3
172527-13160	7	4
172527-13180	7	6
172527-13190	7	7
172527-13310	8	2
172527-13320	8	4
172527-13340	8	3
172527-13361	8	6
172527-13370	8	7
172527-13410	8	10
172527-13420	8	11
172527-13700	8	5 A
172527-13810	8	47
172527-13820	8	48
172527-13830	8	49
172527-14101	9	1
172527-14101-2	9	1 -1
172527-16100	10	1
172527-16120	10	4
172527-16130	10	2
172527-16150	10	3
172527-16200	11	1
172527-16300	11	5
172527-16310	10	8
172527-16320	11	8
172527-16500	11	9
172527-16570	11	19
172527-16650	13	8
172527-17080	12	2
172527-17110	12	3
172527-17200	12	12

Parts No.	Fig. No.	Ref. No.
172527-17210	12	81
172527-17220	12	90
172527-17250	12	4
172527-17260	12	5
172527-17280	12	6
172527-17290	12	7
172527-17310	12	8
172527-17340	12	9
172527-17350	12	10
172527-17360	12	15
172527-17411	12	39
172527-17420	12	82
172527-17430	12	91
172527-17440	12	83
172527-17451	12	40
172527-17460	12	92
172527-17470	12	84
172527-17480	12	93
172527-17510	13	1
172527-17520	12	86
		95
172527-17531	13	7
172527-17540	12	87
		96
172527-17550	12	88
		97
172527-17560	12	85
		94
172527-17570	12	89
		98
172527-17601	43	1
172527-17611	43	2
172527-17620	43	3
172527-17630	43	4
		4 -1
172527-17640	43	5
172527-17650	43	6
172527-17710	43	8
172527-17720	43	9
172527-17730	43	12
172527-17750	43	34
172527-17760	43	35
172527-17770	43	36
172527-17780	43	37
172527-17790	43	40
172527-17810	43	13
172527-17820	43	14
172527-17830	40	27
		36
	43	15

Parts No. Index

Parts No.	Fig. No.	Ref. No.
172527-17840	43	16
172527-17850	43	17
172527-17860	43	18
172527-17870	43	19
172527-17880	43	20
172527-17910	67	1
172527-17920	67	2
172527-17930	67	3
172527-17940	67	4
172527-17950	67	5
172527-21210	14	1
172527-21510	14	9
172527-21800	14	11
172527-21810	14	12
172527-21820	14	13
172527-21830	14	14
172527-25710	15	1
172527-25720	15	2
172527-25730	15	3
172527-25740	15	4
172527-25750	15	5
172527-25770	15	6
172527-25771	15	6 -1
172527-25790	15	7
	16	30
172527-25810	15	8
	16	2
		31
172527-25820	15	9
172527-25840	15	10
172527-25841	15	10 -1
172527-25850	15	11
172527-25920	15	4 A
172527-25930	15	5 A
172527-26000	16	1
172527-26010	16	3
		32
172527-26040	16	6
172527-26050	16	7
		35
172527-26060	16	8
172527-26070	16	9
		36
172527-26080	16	10
		37
172527-26130	16	14
		41
172527-26200	16	28
172527-26210	16	3 A
		32 A

Parts No.	Fig. No.	Ref. No.
172527-26300	16	1 A
172527-26310	16	47
172527-26320	17	14
172527-26400	16	28 A
172527-26410	17	5
172527-26710	18	1
172527-26730	18	2
172527-26740	18	4
172527-26910	18	11
172527-28310	19	1
172527-28320	19	2
172527-28330	19	3
172527-31110	20	2
172527-31120	20	3
172527-31130	20	18
172527-31140	20	19
172527-31150	20	4
172527-31160	20	5
		20
172527-31170	20	6
		21
172527-31190	21	10
172527-31250	20	22
172527-33100	21	1
172527-33200	21	5
172527-33260	21	7
172527-33510	21	11
172527-33520	21	12
172527-33530	21	13
172527-34400	22	3
172527-34410	22	5
172527-34420	22	6
172527-34430	22	9
172527-34440	22	10
172527-34470	22	22
172527-35110	23	2
172527-35120	23	6
172527-35150	23	4
		8
	24	3
		7
172527-35210	69	2
172527-35310	24	2
172527-35320	24	6
172527-35330	24	5
		9
172527-35411	25	2
172527-35421	25	6
172527-35451	25	5
		9

Parts No.	Fig. No.	Ref. No.
172527-35900	20	7 -1
		23 -1
172527-42010	27	44
172527-42020	27	45
172527-42030	27	46
172527-42100	26	3
172527-42140	26	6
	27	2
172527-42170	26	7
172527-42190	27	49
172527-42200	27	50
172527-42240	26	8
172527-42250	28	3
172527-42283	28	24
172527-42300	27	4
172527-42320	28	4
172527-42350	28	5
172527-42391	28	14
172527-42400	27	8
172527-42500	27	11
172527-42600	27	15
172527-42671	27	51
172527-42680	27	19
172527-42700	27	20
172527-42730	27	23
172527-42860	28	9
172527-42921	28	25
172527-42962	28	10
172527-43390	28	22
172527-45101	29	1
172527-45210	29	11
	30	1
172527-45221	29	12
172527-45580	29	30
172527-46110	30	4
172527-46140	30	5
172527-47600	31	1
172527-47601	31	1 -1
172527-47620	31	1 B
		1 B-1
172527-47630	31	18
172527-47810	31	4
172527-47880	31	19
172527-47910	31	5
172527-47920	31	6
172527-47980	31	9
172527-47990	31	10
172527-49500	32	1
172527-49600	33	1
172527-52070	35	2

Parts No.	Fig. No.	Ref. No.
172527-52070-1	35	2 -1
172527-52101	34	13
172527-52411	34	1
172527-52421	34	2
172527-52431	34	3
	35	1
		42
172527-52451	34	4
	35	11
172527-52800	34	5
172527-52881	34	15
172527-52920	35	10
172527-53300	35	30
172527-53300-1	35	30 -1
172527-53310	35	31
172527-53310-1	35	31 -1
172527-53350	35	32
172527-53361	35	33
172527-53371	35	35
172527-53371-1	35	35 -1
172527-53550	35	39
172527-53610	35	43
172527-53620	35	44
172527-53620-1	35	44 A
172527-54230	35	28
172527-54510	35	5
172527-54710	35	6
172527-54810	35	13
172527-54850	35	14
172527-54870	35	15
172527-54880	35	16
172527-54890	35	12
172527-54930	35	17
172527-54950	35	18
172527-54970	35	19
172527-55510	36	1
172527-55510-3	36	1 -1
172527-61120	36	3
172527-61210	36	4
172527-61410	36	5
172527-61421	36	31
172527-61540	36	13
172527-61540-2	36	13 -1
172527-61610	36	6
172527-61610-1	36	6 -1
172527-61630	36	7
172527-61630-1	36	7 -1
172527-61710	36	8
172527-61720	36	9
172527-61810	36	10

Parts No. Index

Parts No.	Fig. No.	Ref. No.
172527-61810-3	36	10 -1
172527-61850	36	11
172527-61860	36	12
172527-61880	36	26
172527-61890	36	27
172527-61980	36	32
172527-61990	37	3
172527-62110	36	28
172527-62110-1	36	28 -1
172527-62120	36	29
172527-62120-1	36	29 -1
172527-63350	4	29
172527-63360	4	30
172527-63370	4	31
172527-63380	4	32
172527-63390	4	33
172527-63450	8	43
172527-63460	8	44
172527-63470	8	45
172527-63510	38	1
172527-63520	38	2
172527-63530	38	3
172527-63540	38	4
172527-63550	38	5
172527-63560	38	6
172527-63570	38	7
172527-63580	38	8
172527-63590	38	9
172527-63610	38	10
172527-63620	38	11
172527-63630	38	12
172527-63640	38	13
172527-63650	38	14
172527-63660	38	15
172527-63670	38	16
172527-63680	38	17
172527-63690	38	18
172527-63710	38	19
172527-63720	38	20
172527-63730	38	21
172527-63750	36	42
172527-63760	36	43
172527-63770	36	44
172527-63910	39	1
172527-63920	39	2
172527-63950	39	3
172527-63960	39	4
172527-63970	39	5
172527-63980	39	6
172527-63990	39	7

Parts No.	Fig. No.	Ref. No.
172527-64200	37	1
172527-65100	37	4
172527-65120	37	6
172527-65130	37	8
172527-65140	37	9
172527-65150	37	15
172527-65170	37	16
172527-65181	37	17
172527-65191	37	18
172527-65211	37	19
172527-65211-1	37	19 -1
172527-65270	37	20
172527-65312	37	21
172527-65351	37	22
172527-65361	37	23
172527-65370	37	45
172527-65550	37	46
172527-65560	37	47
172527-65730	37	29
172527-65750	37	30
172527-65811	37	31
172527-67101	40	26
172527-67131	40	28
172527-67151	40	35
172527-67170	41	22
172527-67180	41	6
172527-67190	41	29
172527-67211	42	1 -1
172527-67221	42	7 -1
172527-67230	42	8
172527-67240	42	10
172527-67251	42	31 -1
172527-67261	42	41 -1
172527-67270	42	42
172527-67280	42	44
172527-67850	42	47
172527-67950	42	11
172527-68101	40	5
172527-68102	40	5 -1
172527-68111	40	8
172527-68112	40	8 -1
172527-68220	41	7
172527-68230	41	8
172527-68240	41	9
	43	38
172527-68251	41	10
		79 A
		79 B
	42	3
		34

Parts No.	Fig. No.	Ref. No.
172527-68251	43	39
172527-68260	41	11
172527-68270	41	12
		13
172527-68280	41	15
		16
172527-68290	41	17
		18
	42	4
		35
172527-68370	44	4
172527-68380	44	5
172527-68402	41	5
172527-68403	41	5 -1
172527-68412	41	21
172527-68413	41	21 -1
172527-68430	41	23
172527-68450	41	24
172527-68460	41	25
172527-68470	41	26
172527-68480	41	27
172527-68491	41	28
172527-68511	40	6
172527-68512	40	29
172527-68512-1	40	6 -1
172527-68530	40	9
172527-68531	40	9 -1
172527-68540	40	10
172527-68541	40	10 -1
172527-68550	44	6
172527-68560	44	7
172527-68570	44	8
172527-68580	44	9
172527-68590	44	10
172527-68620	41	30
172527-68630	41	31
172527-68640	41	32
172527-68650	41	33
172527-68660	41	34
172527-68671	40	17
	41	80
172527-68671-2	40	17 -1
	41	80 -1
172527-68681	41	35
172527-68690	41	36
172527-68711	41	37
172527-68720	41	38
172527-68730	41	39
172527-68740	44	11
172527-68750	41	40

Parts No.	Fig. No.	Ref. No.
172527-68760	41	41
172527-68770	41	42
172527-68780	41	43
172527-68801	42	1
172527-68811	42	7
172527-68850	42	13
		36
172527-68860	42	14
		37
172527-68870	41	20
	42	15
		38
172527-68880	42	16
		39
172527-68890	42	17
		40
172527-68901	42	31
172527-68911	42	41
172527-68950	42	49
172527-68960	42	19
		50
172527-68970	42	63
172527-68980	42	64
172527-68990	42	65
172527-69090	41	54
172527-69101	41	44
172527-69130	41	45
172527-69140	41	46
172527-69150	41	47
172527-69170	41	79
172527-69181	41	55
172527-69190	41	56
172527-69200	41	57
172527-69210	41	58
172527-69220	41	59
172527-69230	41	60
172527-69250	43	21
172527-69260	43	22
172527-69280	40	13
		32
172527-69360	44	12
172527-69371	44	13
172527-69381	44	14
172527-69390	44	15
172527-69400	44	1
172527-69410	44	16
172527-69430	44	17
172527-69440	44	18
172527-69570	41	14
172527-69590	67	6

Parts No. Index

Parts No.	Fig. No.	Ref. No.
172527-69610	41	61
		62
		63
	44	20
172527-69620	41	64
		65
172527-69630	40	14
		33
	41	66
	43	24
172527-69640	41	67
172527-69650	42	21
		52
	67	7
172527-69670	42	61
	44	22
		23
172527-69680	42	62
172527-69710	40	15
172527-69720	41	68
		69
	43	25
		26
		27
		32
		33
		43
	44	24
		25
172527-69730	41	70
172527-69740	41	71
	43	41
172527-69760	43	28
172527-69770	44	26
172527-69780	43	29
172527-69790	42	23
		54
	43	30
172527-69810	42	24
		55
	43	10
172527-69820	41	72
172527-69830	41	19
172527-69840	42	25
		56
172527-69850	41	48
		73
172527-69860	41	74
	42	26
		27

Parts No.	Fig. No.	Ref. No.
172527-69860	42	57
		58
172527-69870	42	28
		59
172527-69880	42	29
		60
172527-69910	44	27
172527-69920	44	28
172527-69930	44	29
172527-69940	41	78
172527-69951	41	49
172527-69961	41	50
172527-69971	41	51
172527-69981	41	52
172527-69991	41	53
172527-72110	45	8
172527-72310	45	13
172527-72420	47	23
172527-72502	45	1
172527-72601	46	1
172527-72670	46	16
172527-72750	46	19
172527-72801	47	1
172527-72900	47	15
172527-72960	47	16
		19
172527-72970	47	18
172527-73100	48	1
172527-73110	48	2
172527-73120	48	3
172527-73130	48	4
172527-73140	48	5
172527-73150	48	6
172527-73160	48	7
172527-73170	48	8
172527-73180	48	9
	50	2
172527-73190	48	10
	50	3
172527-73210	48	11
	50	4
172527-73220	48	12
172527-73230	48	13
172527-73240	48	14
172527-73250	48	15
172527-73260	48	16
172527-73270	48	17
172527-73280	48	18
172527-73290	48	19
172527-73300	50	1

Parts No.	Fig. No.	Ref. No.
172527-73310	50	31
172527-73320	50	5
172527-73330	50	6
172527-73340	50	7
172527-73350	48	20
172527-73360	48	21
172527-73370	48	22
172527-73380	48	23
172527-73390	48	24
172527-73410	48	25
172527-73420	48	26
172527-73430	48	27
172527-73440	48	29
172527-73450	48	30
172527-73460	48	31
172527-73470	48	32
172527-73480	48	33
172527-73490	48	35
172527-73510	48	37
172527-73520	48	39
172527-73530	48	42
172527-73540	48	34
172527-73550	48	50
	50	27
172527-73560	48	45
172527-73570	48	44
172527-73580	48	28
172527-73590	48	36
172527-73600	48	51
172527-73610	48	52
172527-73620	48	54
172527-73630	48	55
172527-73640	48	56
172527-73650	48	40
	50	25
172527-73660	50	8
172527-73670	50	9
172527-73680	50	10
172527-73690	50	12
172527-73710	50	13
172527-73720	50	14
172527-73730	50	15
172527-73740	50	16
172527-73750	50	17
172527-73760	50	18
172527-73770	50	21
172527-73780	50	22
172527-73790	50	24
172527-73800	50	26
172527-73810	50	29

Parts No.	Fig. No.	Ref. No.
172527-73840	48	57
172527-73850	56	1
172527-73870	56	3
172527-73880	48	38
172527-73890	48	43
172527-73910	48	53
172527-73920	50	19
172527-73940	50	23
172527-73960	50	28
172527-74110	53	1
172527-74120	53	2
172527-74130	53	3
	54	2
172527-74140	53	4
	54	3
172527-74150	53	5
	54	4
172527-74160	53	6
	54	5
172527-74170	53	7
	54	6
172527-74180	53	8
	54	7
172527-74190	53	9
	54	8
172527-74210	53	10
172527-74220	54	9
172527-74400	54	1
172527-74410	54	10
172527-74420	54	11
172527-74430	54	12
172527-75111	55	2
172527-75111-2	55	2 -1
172527-75411	55	5
172527-76210	57	6
172527-76350	57	19
	58	19
172527-76460	57	20
	58	20
172527-76511	59	1
172527-76521	59	2
172527-77370	60	6
172527-77400	60	10
172527-78111	59	6
172527-78130	59	7
172527-78140	59	8
172527-78210	59	11
172527-78230	59	12
172527-78240	59	13
172527-78251	59	14

Parts No. Index

Parts No.	Fig. No.	Ref. No.
172527-78310	57	27
172527-78330	57	28
172527-78351	57	30
172527-78360	57	31
172527-78380	57	29
172527-78391	57	32
172527-78441	57	34
172527-78442	57	34 -1
	58	51
172527-78461	57	36
172527-78471	57	37
172527-78491	57	33
172527-78492	57	33 -1
172527-78570	60	13
172527-78580	60	14
172527-78731	59	16
172527-78750	59	15
172527-91180	61	4
	62	9
172527-91190	61	5
	62	10
172527-91201	63	13
	81	3
172527-91201-1	63	13 -1
172527-91210	61	8
172527-91220	62	22
172527-91230	61	13
	62	21
172527-91250	62	2
172527-91260	62	3
172527-91270	62	4
172527-91280	62	5
172527-91290	62	6
172527-91301	62	7
172527-91390	63	4
172527-91390-2	63	4 -1
	74	3
	77	3
	78	4
	84	3
	85	3
	86	3
172527-91390-3	81	4
172527-91400	63	1
172527-91400-2	63	1 -1
	74	2
172527-91600	62	13
172527-91650	62	15
172527-91700	63	9
172527-91700-1	63	9 -1

Parts No.	Fig. No.	Ref. No.
172527-91700-1	77	5
172527-91900	63	12
172527-91900-1	63	12 -1
	78	3
172527-92100	61	1
172527-96100-3	66	11
172527-96100-4	66	11 -1
172527-96200	64	5
172527-96200-1	64	5 -1
172527-96400	65	1
172527-96400-1	65	1 -1
	84	5
172527-96500	65	4
172527-96500-1	65	4 -1
	85	5
172527-96600	65	7
172527-96600-1	65	7 -1
	86	5
172527-96700	66	3
172527-96700-1	66	3 -1
172528-03110	1	2 A
172528-03120	1	3 A
172528-03170	1	7 A
172528-03340	1	20 A
172528-11310	4	8 A
172528-11390	4	28 A
172528-11561	5	1 A
172528-11571	5	2 A
172528-12260	6	5
172528-13910	8	15
172528-14610	9	9
172528-17610	43	2 -1
172528-17620	43	2 A
172528-17630	43	2 B
172528-17750	43	33 A
172528-17760	43	33 B
172528-17770	43	33 C
172528-17780	43	33 D
172528-17800	43	42
172528-21800	14	11 A
172528-21820	14	13 A
172528-21830	14	14 A
172528-26210	16	3 B
		32 B
172528-26300	16	1 B
172528-26320	17	14 A
172528-26330	17	5 A
172528-26400	16	28 B
172528-26710	18	1 A
172528-28310	19	1 A

Parts No.	Fig. No.	Ref. No.
172528-28320	19	2 A
172528-28330	19	3 A
172528-31110	20	2 A
172528-31120	20	3 A
172528-31130	20	18 A
172528-31140	20	19 A
172528-35110	23	2 A
172528-35120	23	6 A
172528-35150	23	4 A
		8 A
	24	3 A
		7 A
172528-35210	69	3
172528-35310	24	2 A
172528-35320	24	6 A
172528-35330	24	5 A
		9 A
172528-35411	25	2 A
172528-35421	25	6 A
172528-35451	25	5 A
		9 A
172528-42621	27	18 A
172528-45210	29	11 A
	30	1 A
172528-52070	35	2 A
172528-52101	34	13 A
172528-52800	34	5 A
172528-53300	35	30 A
172528-53310	35	31 A
172528-63350	4	29 A
172528-63360	4	30 A
172528-63370	4	31 A
172528-63380	4	32 A
172528-63390	4	33 A
172528-67050	41	29 -1
172528-69420	41	43 A
172528-69920	43	33 E
172528-72502	45	1 A
172528-72601	46	1 A
172528-72700	45	8 A
172528-72750	45	13 A
172528-72800	46	16 A
172528-72840	46	19 A
172528-74110	53	1 A
172528-74140	54	3 A
172528-74150	54	4 A
172528-74400	54	1 A
172528-77370	60	6 A
172528-91201	63	14
172528-91201-1	63	14 -1

Parts No.	Fig. No.	Ref. No.
172528-91201-2	82	3
172528-91301	62	7 A
172528-91390	63	5
172528-91390-1	63	5 -1
	75	3
	76	3
	79	4
	80	3
	87	4
	88	3
	89	3
	90	3
172528-91390-2	82	4
	83	4
172528-91400	63	2
172528-91400-1	63	2 -1
	75	2
172528-91600	62	13 A
172528-91700	63	10
172528-91700-1	63	10 -1
	79	3
172528-92100	61	1 A
172528-96400	65	2
172528-96400-1	65	2 -1
	87	3
172528-96500	65	5
172528-96500-1	65	5 -1
	89	5
172529-03110	1	2 B
172529-03120	1	3 B
172529-53300	35	30 B
172529-53310	35	31 B
172529-72110	45	8 B
172529-72150	45	13 B
172529-72210	46	16 B
172529-72260	46	19 B
172529-72310	47	15 A
172529-72350	47	18 A
172529-72502	45	1 B
172529-72601	46	1 B
172529-72801	47	1 A
172529-77370	60	6 B
172529-91201	63	15
172529-91201-1	63	15 -1
172529-91201-2	83	3
172529-91301	62	7 B
172529-91400	63	3
172529-91400-1	63	3 -1
	76	2
172529-91600	62	13 B

Parts No. Index

Parts No.	Fig. No.	Ref. No.
172529-91700	63	11
172529-91700-1	63	11 -1
	80	5
172529-92100	61	1 B
172529-96400	65	3
172529-96400-1	65	3 -1
	88	5
172529-96500	65	6
172529-96500-1	65	6 -1
	90	5
172530-03210	1	35
172530-03220	1	36
	2	17
172530-03230	1	37
	2	18
172530-13500	8	5
172530-13500-1	8	5 -1
172530-17150	12	28
172530-42800	28	6
172532-17170	12	107
172533-68100	40	7
172534-03100	1	6 A
172534-16300	11	5 -1
172534-16500	11	9 -1
		9 A
172534-16570	11	19 -1
172534-17210	12	108
172534-17220	12	109
172534-21210	14	1 A
172534-21510	14	9 A
172534-42170	26	7 A
172534-71330	70	16
	71	16
172534-71340	70	40
	71	40
172534-71350	70	50
172534-71360	70	54
	71	54
172534-71380	70	60
	71	60
172534-71390	70	61
	71	61
172534-71410	70	51
	71	51
172534-71420	70	52
172534-71430	70	70
	71	70
172534-71440	70	71
172534-71480	70	75
	71	75

Parts No.	Fig. No.	Ref. No.
172534-71490	70	76
	71	76
172534-71500	70	17
	71	17
172534-71510	70	18
	71	18
172534-71540	70	81
	71	82
172534-71550	70	82
	71	83
172534-71560	70	83
	71	84
172534-71570	70	86
	71	87
172534-71600	70	27
	71	27
172534-71700	70	49
	71	49
172534-73100	49	1
	70	1
172534-73110	70	2
172534-73120	70	69
172534-73130	70	104
	71	104
172534-73140	70	80
	71	81
172534-73300	51	1
	72	1
172534-73310	51	2
172534-73320	72	2
	73	2
172534-73330	72	7
	73	7
172534-73340	72	10
	73	10
172534-73610	72	3
	73	3
172534-73620	72	4
	73	4
172534-73630	72	5
	73	5
172534-73640	72	8
	73	8
172534-73650	72	24
	73	24
172534-73660	72	33
	73	33
172534-73670	72	57
	73	57
172534-73680	72	58

Parts No.	Fig. No.	Ref. No.
172534-73680	73	58
172534-73690	72	59
	73	59
172534-73700	72	28
	73	28
172534-73710	72	29
	73	29
172534-73720	72	30
	73	30
172534-73730	72	31
	73	31
172534-73740	72	32
	73	32
172534-73750	72	35
	73	35
172534-73760	72	56
	73	56
172534-73770	72	40
	73	40
172534-73780	72	41
	73	41
172534-73790	72	42
	73	42
172534-73800	72	43
	73	43
172534-73810	72	44
	73	44
172534-73820	72	46
	73	46
172534-73830	72	47
	73	47
172534-73840	72	48
	73	48
172534-73850	72	49
	73	49
172534-73860	72	50
	73	50
172534-73870	72	51
	73	51
172534-73880	72	53
	73	53
172534-73890	72	54
	73	54
172534-73900	72	52
	73	52
172534-73910	72	55
	73	55
172534-75410	55	5 A
172534-76700	58	21
172534-76701	58	21 -1

Parts No.	Fig. No.	Ref. No.
172534-76710	58	22
172534-76711	58	22 -1
172534-76720	58	23
172534-76721	58	23 -1
172534-76730	58	24
172534-76731	58	24 -1
172534-76740	58	25
172534-76741	58	25 -1
172534-76750	58	26
172534-76751	58	26 -1
172534-76760	58	27
172534-76770	58	28
172534-78100	58	43
172534-78110	58	44
172534-78120	58	45
172534-78130	58	46
172534-78140	58	47
172534-78160	58	49
172534-78170	58	50
		52
172535-03100	1	6 B
172535-71350	71	50
172535-71420	71	52
172535-71440	71	71
172535-71520	71	78
172535-73100	49	1 A
	71	1
172535-73110	71	2
172535-73120	71	69
172535-73300	51	1 A
	73	1
172536-03100	1	6 C
172537-03100	31	18 -1
172538-08400	74	1
172538-08410	77	1
172538-08420	78	1
172538-08450	84	1
172538-08460	85	1
172538-08470	86	1
172538-08510	81	1
172538-08550	24	11
172538-08560	69	6
172538-08570	25	11
172538-12310	6	7 -1
172538-47600	31	1 -2
172538-47610	31	20
172538-47630	31	1 C
172539-08400	75	1
172539-08410	79	1
172539-08450	87	1

Parts No. Index

Parts No.	Fig. No.	Ref. No.
172539-08460	89	1
172539-08510	82	1
172539-08550	24	12
172539-08560	69	7
172539-08570	25	12
172543-08400	76	1
172543-08410	80	1
172543-08450	88	1
172543-08460	90	1
172543-08510	83	1
172645-76560	57	13
172648-16600	11	7
172649-72600	70	48
	71	48
172649-72750	70	89
	71	90
172649-73680	70	64
	71	64
172649-73740	72	39
	73	39
172649-73810	72	45
	73	45
172649-74470	57	23
	58	37
172649-74480	57	24
	58	38
172649-74490	57	25
	58	39
172650-73640	70	21
		24
		53
	71	21
		24
		53
172650-73690	72	27
	73	27
172650-73870	72	60
	73	60
172651-73610	70	20
	71	20
172651-73730	70	91
	71	92
	72	38
	73	38
172652-73750	56	4
172652-73770	56	5
172652-73780	56	7
172652-73790	56	8
172653-71310	70	3
	71	3

Parts No.	Fig. No.	Ref. No.
172653-71320	70	8
	71	8
172653-71360	70	59
	71	59
172653-71390	70	62
	71	62
172653-71410	70	63
	71	63
172653-71420	70	4
	71	4
172653-71430	70	5
	71	5
172653-71440	70	6
	71	6
172653-71460	70	11
	71	11
172653-71470	70	12
	71	12
172653-71480	70	13
	71	13
172653-71490	70	14
	71	14
172653-71520	70	22
	71	22
172653-71530	70	25
	71	25
172653-71540	70	26
	71	26
172653-71550	70	23
	71	23
172653-71560	70	41
	71	41
172653-71580	70	42
	71	42
172653-71590	70	43
	71	43
172653-71600	70	44
	71	44
172653-71610	70	45
	71	45
172653-71620	70	46
	71	46
172653-71630	70	47
	71	47
172653-73320	72	6
	73	6
172653-73330	72	9
	73	9
172653-73340	72	61
	73	61

Parts No.	Fig. No.	Ref. No.
172653-73350	72	62
	73	62
172653-73360	72	63
	73	63
172653-73390	72	11
	73	11
172653-73400	72	12
	73	12
172653-73410	72	13
	73	13
172653-73420	72	14
	73	14
172653-73430	72	15
	73	15
172653-73440	72	16
	73	16
172653-73450	72	17
	73	17
172653-73460	72	18
	73	18
172653-73470	72	19
	73	19
172653-73480	72	20
	73	20
172653-73490	72	21
	73	21
172653-73500	72	22
	73	22
172653-73530	72	25
	73	25
172653-73550	72	34
	73	34
172653-73570	72	36
	73	36
172653-73580	72	26
		37
	73	26
		37
172964-03481	1	27
	2	16
177035-02920	20	1
		17
	22	1
184015-03250	8	42
184016-55700	9	14
184016-55701	9	14 -1
187B01-25710	15	1 A
187B01-25910	15	3 A
194080-57202	12	49
194080-75790	34	14

Parts No.	Fig. No.	Ref. No.
194130-01390	26	1
194145-04810	10	14
	12	11
	32	8
	33	8
	60	8
194145-31520	17	6
194205-36320	22	12
194320-31560	17	6 A
194420-52120	12	48
194447-14140	16	29
	22	2
194630-15520	59	20
	60	4
194640-33590	19	8
194640-34150	19	10
194990-20170	26	1 A
		2
	27	1
194990-22130	36	19
197821-82821	41	27 -1
198010-36310	22	11
198010-36390	22	13
198010-51500	10	7
198138-49100	58	1 A
198162-00640	8	1
198220-53170	12	16
		21
198220-56130	12	22
198220-56140	12	23
198220-56150	12	24
198220-56160	12	25
198220-56230	12	26
198220-62410	37	5
198240-33570	19	6
198240-33630	19	9
198250-31630	17	8
198250-31810	17	9
198250-31820	17	10
198250-33540	19	4
198250-33550	19	5
198250-33570	19	7
198290-32750	22	4
198320-31530	17	7 A
198320-31570	17	9 A
198320-31630	17	8 A
198320-31820	17	10 A
198320-33540	19	4 A
198320-33550	19	5 A
198320-33560	19	7 A

Parts No. Index

Parts No.	Fig. No.	Ref. No.
198320-33570	19	6 A
198320-33620	19	8 A
198360-31530	17	7
198448-48810	57	1
	58	1
1A1040-63400	36	36
1A1102-51460	35	40
	40	22
1A1380-59480	11	20
	57	42
	58	42
1A6210-16150	27	47
1A6210-16160	27	48
1A6380-24080	56	10
1A6380-48870	60	1
1A6780-57110	12	29
1A7400-53110	12	81 -1
1A7400-53120	12	90 -1
1A7400-53520	12	86 -1
		95 -1
1A7400-53530	12	87 -1
		96 -1
1A7400-53550	12	89 A
		98 A
1A7400-53560	12	85 -1
		94 -1
1A7400-53570	12	83 -1
1A7400-53580	12	92 -1
1A7400-53590	12	82 -1
1A7400-53600	12	91 -1
1A7400-53610	12	84 -1
1A7400-53620	12	93 -1
1C6281-52310	6	17
	29	15
	30	7
	37	2
1C6281-52320	29	31
1C6320-66451	6	18
1C6360-65700	64	2
1C6410-52690	27	40
1C6560-47000	28	12
1C6650-44090	29	8
1C6710-83170	28	13
1E4760-43090	6	14
	26	19
	27	52
1E6299-03000	8	12
1E6480-82280	12	60
1E6681-56621	20	7
		23

Parts No.	Fig. No.	Ref. No.
1E6690-81530	12	59
1E6740-64200	26	8 A
		21
	27	53
1E9000-82000	12	110
1E9110-81100	12	41 -1
22117-100000	48	58
22137-060000	6	19
		29
	12	61
		64
	29	16
22137-080000	4	13
	8	30
		31
	29	17
		32
	30	8
	37	11
		32
	40	2
	41	2
		76 -1
	57	2
	58	2
22137-100000	4	4
		14
		22
	5	20
	7	8
		13
	12	30
	13	3
	26	11
	27	25
		26
		27
	29	18
	31	11
	35	26
	36	14
		15
	37	33
		48
	42	25 -1
		56 -1
	50	32
	64	16
22137-120000	9	23
	35	27

Parts No.	Fig. No.	Ref. No.
22137-120000	40	7 A
		23
		37
		37 -1
	55	12
22137-140000	31	2
	40	19
	41	82
	49	2
	64	17
22137-160000	48	61
22157-060000	36	34
		35
22157-080000	36	16
22157-100000	36	17
22217-060000	6	20
	11	23
	26	12
	28	15
	41	75
22217-080000	3	3
	4	15
	6	21
	8	33
	26	13
	27	28
	40	3
	41	3
		76
22217-100000	4	5
		16
	7	9
	10	10
	15	12
	22	16
	27	29
	29	19
	35	24
	53	11
	54	13
22217-120000	6	22
	14	2
	35	25
22217-140000	34	10
	49	3
	63	7
	74	5
	75	5
	76	5
	77	6

Parts No.	Fig. No.	Ref. No.
22217-140000	78	6
	79	6
	80	6
	81	6
	82	6
	83	6
	84	6
	85	6
	86	6
	87	6
	88	6
	89	6
	90	6
22217-160000	48	62
22217-200000	65	10
22232-050000	41	72 -1
22242-000140	64	18
22242-000180	70	102
	71	102
22242-000250	22	14
	27	42
	70	7
	71	7
22242-000300	15	13
	48	46
22242-000350	15	14
22242-000450	15	15
	16	20
22252-000120	70	96
	71	97
22252-000220	57	26
	58	41
22252-000250	50	11
22252-000350	48	47
22312-060100	48	48
	50	20
22312-100160	16	21 A
		48 A
22312-100180	16	21 B
		48 B
22312-100200	16	21
		48
	19	11
	20	8
		9
		10
		24
		25
		26
	22	17

Parts No. Index

Parts No.	Fig. No.	Ref. No.
22351-060032	30	9
22351-060036	17	11
22351-060050	17	11 A
	27	30
22351-080020	14	3
22351-080040	19	9 A
	27	31
22351-080050	28	16
22360-080000	37	34
22372-080000	41	77
22372-100000	26	22
	27	54
		55
	28	28
22411-250200	28	17
22417-250320	29	6
22486-060180	29	20
	30	10
22487-060160	37	35
22487-080600	29	33
22487-100400	64	8
22695-320641	35	34
22857-500160	37	12
22859-400161	42	23 -1
		54 -1
22869-400200	42	29 -1
		60 -1
23000-022000	44	30
23000-048000	5	10 A
23000-060000	5	10
23001-022000	57	38
	58	53
	59	17
23001-025000	5	23
	57	39
23001-035000	57	40
	58	54
	59	18
23001-041000	8	34
		51
	57	41
	58	55
23061-050300	9	19
23065-070130	8	23
23391-020000	57	12
23395-040000	58	30
23414-080000	22	23
23414-160000	20	11
		27
	22	18

Parts No.	Fig. No.	Ref. No.
23490-080002	22	19
23491-140002	5	16
	8	28
	9	7
	55	7
23857-030000	22	24
23871-010000	21	9
23871-060000	20	12
		28
23887-160002	20	13
24101-060094	15	16
24101-060114	17	12 A
24101-062074	15	17
24101-062084	15	18
24101-062104	17	12
24101-062114	17	13
24101-063064	15	19
24141-302110	18	12
24141-320110	18	13 A
24141-322100	18	13
24143-303060	16	22
		49
24144-303070	16	23
		50
24190-160001	22	15
24311-000060	48	41
24311-000160	5	24
	8	27
	9	5
		16
	55	1
24311-000180	5	17
	56	19
	60	2
24311-000240	15	20
	16	51
24311-000380	55	8
24311-000750	21	14
24311-000900	16	24
24315-000100	70	103
	71	103
24315-000110	58	10
		13
		31
	70	38
		67
	71	38
		67
24315-000180	56	14
		18

Parts No.	Fig. No.	Ref. No.
24315-000180	57	9
		11
		15
		18
	58	7
		18
		32
		33
24315-000300	58	15 -1
24321-000600	34	11
24321-000650	9	17
24321-001050	16	25
		52
	55	9
24321-001100	18	14
24341-000750	48	49
	50	30
24341-000850	48	59
24550-012120	28	8
	29	3
24550-015150	64	14
24550-016150	32	5
	33	7
24550-020150	27	21
24550-025150	6	3
	27	5
		12
		16
24550-030300	47	14
24550-035300	45	19
	46	15
	47	14 A
24550-040300	45	19 A
	46	15 A
24550-045300	45	19 B
	46	15 B
24764-020000	21	8
	35	7
	61	9
	62	17
	64	9
24764-040000	21	4
	47	27
26013-060162	12	62
		66
		67
	13	5
26013-060252	12	68
26013-080122	12	69
26013-080162	8	32

Parts No.	Fig. No.	Ref. No.
26013-080162	8	35
	11	24
	12	65
	14	10
	37	36
	56	9
26013-080202	3	6
	5	11
		18
	12	71
	28	23
	36	18
	57	3
	58	3
26013-080302	37	13
26013-080352	8	36
	29	21
	37	38
	59	4
	60	7
26013-080452	29	22
26013-080502	30	11
26013-080552	8	37
26013-100162	10	5
26013-100202	7	10
	8	38
	13	4
	27	32
	28	19
	31	12
	35	36
	36	20
		21
		22
	40	20
	41	83
	47	28
	55	10
	61	10
	62	18
26013-100252	4	21
	5	19
	12	72
	16	27
		54
	21	15
		16
	26	14
	27	33
		34

Parts No. Index

Parts No.	Fig. No.	Ref. No.
26013-100252	29	23
	36	23
	37	39
26013-100302	3	7
	4	17
	22	20
	31	13
	36	24
	37	41
	50	33
	52	45
	58	34
26013-100352	4	18
	7	11
	10	11
	12	70
	27	43
	32	6
	33	9
	52	44
	53	13
	54	15
	60	15
26013-100402	5	12
	18	15
26013-100452	15	21
		22
	21	17
	36	25
	60	16
26013-100502	21	17 -1
	31	14
	35	41
	36	2
	40	24
	58	35
	59	19
26013-120252	66	9
		18
26013-120302	9	8
	35	8
		9
	40	25
	55	11
26013-120402	51	3
26013-120502	20	14
		29
26013-120952	20	15
		30
26014-060162	8	39

Parts No.	Fig. No.	Ref. No.
26014-060162	36	37
	42	21 -1
		52 -1
26014-080162	41	67 -1
26014-080252	37	42
26014-080302	37	37
26014-080352	37	49
26014-100302	36	30
26018-060162	67	8
26022-050162	12	63
26022-060162	36	38
		39
		40
26023-060162	37	43
	42	22
		30
		32
		53
26076-100252	48	60
26076-100302	7	14
26076-120302	40	7 B
		15 -1
		15 -2
26106-080652	9	20
26116-080162	40	14 -1
	41	79 C
26116-080402	14	15
26116-100352	19	12
26116-100452	19	12 A
26116-100454	27	41
26116-100652	4	6
26116-100902	22	21
26116-120602	14	4
26116-120952	14	5
26116-121002	14	6
26116-121102	14	7
26116-140352	34	12
26116-160552	35	45
26116-200852	35	37
26116-201002	35	38
26156-100502	15	23
	16	26
		53
26156-140402	49	4
26156-160402	48	63
26156-200352	23	10
	24	10
	25	10
	69	4
26156-200402	69	5

Parts No.	Fig. No.	Ref. No.
26216-100402	31	15
26216-100452	15	24
26216-100502	35	20
26216-120502	35	21
26346-100002	37	28
26366-080002	37	44
26366-100002	36	41
26450-060162	6	23
	70	15
	71	15
26450-100452	20	16
		31
26450-100502	52	43
26450-120702	70	39
	71	39
26579-050122	41	70 -1
26579-050162	41	71 -1
26587-040062	29	7
26617-080002	40	16
		34
	41	79 D
	43	31
26716-060002	6	24
	11	25
	26	15
		16
	28	20
	41	73 -1
26716-080002	3	4
	4	19
	6	25
		28
	8	40
	10	12
	26	15 A
		17
		18
	27	35
		36
	29	24
		34
	30	12
	40	4
	41	4
26716-100002	4	7
		20
	5	13
	7	12
	10	13
	12	99

Parts No.	Fig. No.	Ref. No.
26716-100002	15	25
	27	37
	28	18
		21
	29	25
	31	16
	35	22
	41	74 -1
	42	26 -1
		27 -1
		57 -1
		58 -1
	53	12
	54	14
	60	17
26716-120002	6	26
	14	8
	35	23
26716-200002	65	11
26736-100002	27	38
		39
26736-140002	40	21
	41	84
	63	8
	74	6
	75	6
	76	6
	77	7
	78	7
	79	7
	80	7
	81	7
	82	7
	83	7
	84	7
	85	7
	86	7
	87	7
	88	7
	89	7
	90	7
26756-100002	30	13
26776-140002	31	3
28110-100120	68	7
28110-120140	68	8
28110-190220	68	9
28110-220240	68	10
28160-140170	68	11
29420-050000	11	14
	12	104

Parts No. Index

Parts No.	Fig. No.	Ref. No.
29420-150000	11	15
	12	105
29420-300000	11	16
	12	106
772520-96700-3	65	8
772520-96700-4	65	8 -1
772527-03102	1	1
772527-05100	68	1
772527-96100	66	10
772527-96100-1	66	10 -1
772527-96200	64	1
772527-96200-1	64	1 -1
772527-96700	66	1
772527-96700-1	66	1 -1
772534-03100	1	1 A
772535-03100	1	1 B
772536-03100	1	1 C
794251-13910	17	1
933110-00301	12	78
933110-07101	9	22
	12	79
	37	40
933110-09800	68	12
933111-20200	45	12 B
	46	9 B
933125-59600	45	20
	46	22
	47	21
933147-03400	31	17
933160-01370	56	20
	60	3
933169-15231	11	26
933171-15801	10	6
933171-21700	29	35
981085-91230	66	6
		15
981085-91240	66	7
		16
981085-91250	66	8
		17
981085-91510-3	65	12
981085-91510-4	65	12 -1

Parts No.	Fig. No.	Ref. No.

Parts No.	Fig. No.	Ref. No.

Parts No.	Fig. No.	Ref. No.