YANMAR

PARTS CATALOG

0CS10-M45602EN

Last update Sep., 2016

PREFACE

1. This Parts Catalog carries Yanmar excavator (crawler back-hoe) SV100 for U.S.A., Australia,New Zealand.

2. Parts catalog history

		Parts catalog NO.	Published	Remarks
1st edition	Vehicle	0CS10-G45600	Apr.,2005	Disuse old edition
	Engine	0CB10-G72500		
1st revised	Vehicle	0CS10-G45601	Jan.,2007	Disuse old edition
	Engine	0CB10-G72501		
2st revised	Vehicle	0CS10-G45602	May,2009	
	Engine	0CB10-G72501		

3. Model name

SECTION	Column	Model name	M/#	Manufactured
Ⅰ(Vehicle)	(A)	SV100(US)	00515～01719	2005/01～2008/07
	(B)	SV100(AS)		
	(C)	SV100(NZ)		
Ⅱ(Engine)	(A)	4TNV98T-SBV	07427～78414	2004/12～2008/05

(Note) US:U.S.A.,AS:Australia,NZ:New Zealand

4. Your understanding is asking that this parts catalog is not a technical data manual setting forth as servicing procedures, This parts catalog is using simplified illustration.
Be sure to use Yanmar Genuine Parts in your maintenance servicing of Yanmar products.
Be careful not to use the simple parts available in the market, otherwise their use in repairing causes such as an early breakage, for instance.

VEHICLE PAINTED COLOR(PREVIOUS)

~M/#00757

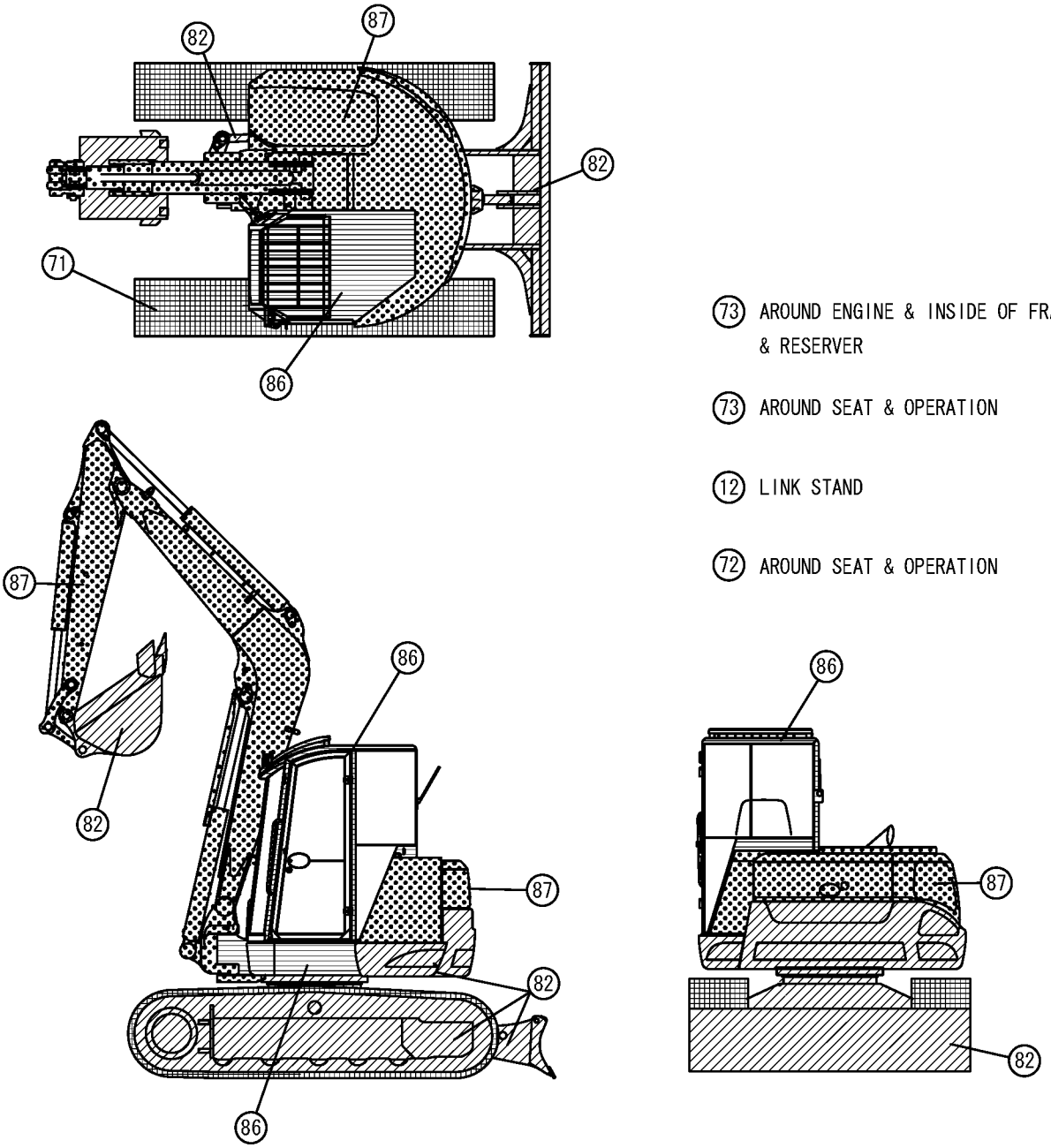

(73) AROUND ENGINE & INSIDE OF FRAME & RESERVER

(73) AROUND SEAT & OPERATION

(12) LINK STAND

(72) AROUND SEAT & OPERATION

Color Code	Desc-ription	Painted Color	Munsel No.	Paint Part No.		
				16L Can	4L Can	SPRAY
87		YANMAR New Permanent Yellow	5.15Y8.45/10.81	981101-09519	977620-40870	977620-30871
86		YANMAR New Grayish Green	2.62BG4.76/2.87	981101-09616	977620-40860	977620-30861
82		YANMAR Deep Green	6.39BG2.13/1.73	981101-09517	977620-40820	977620-30N31
72		YANMAR Dark Olive Gray	7.21Y2.92/0.79	-------	977620-40720	TOR-94800720
71		YANMAR Charcoal Gray	N-1.80	981101-09516	977620-40710	977620-30371
73		YANMAR Warm Gray	5.52Y4.91/1.09	-------	-------	TOR-94800730
12		YANMAR Black	4.90PB0.08/0.41	-------	TOR-91220001	TOR-94800120

VEHICLE PAINTED COLOR(PREVIOUS)

M/#00758～M/#01230

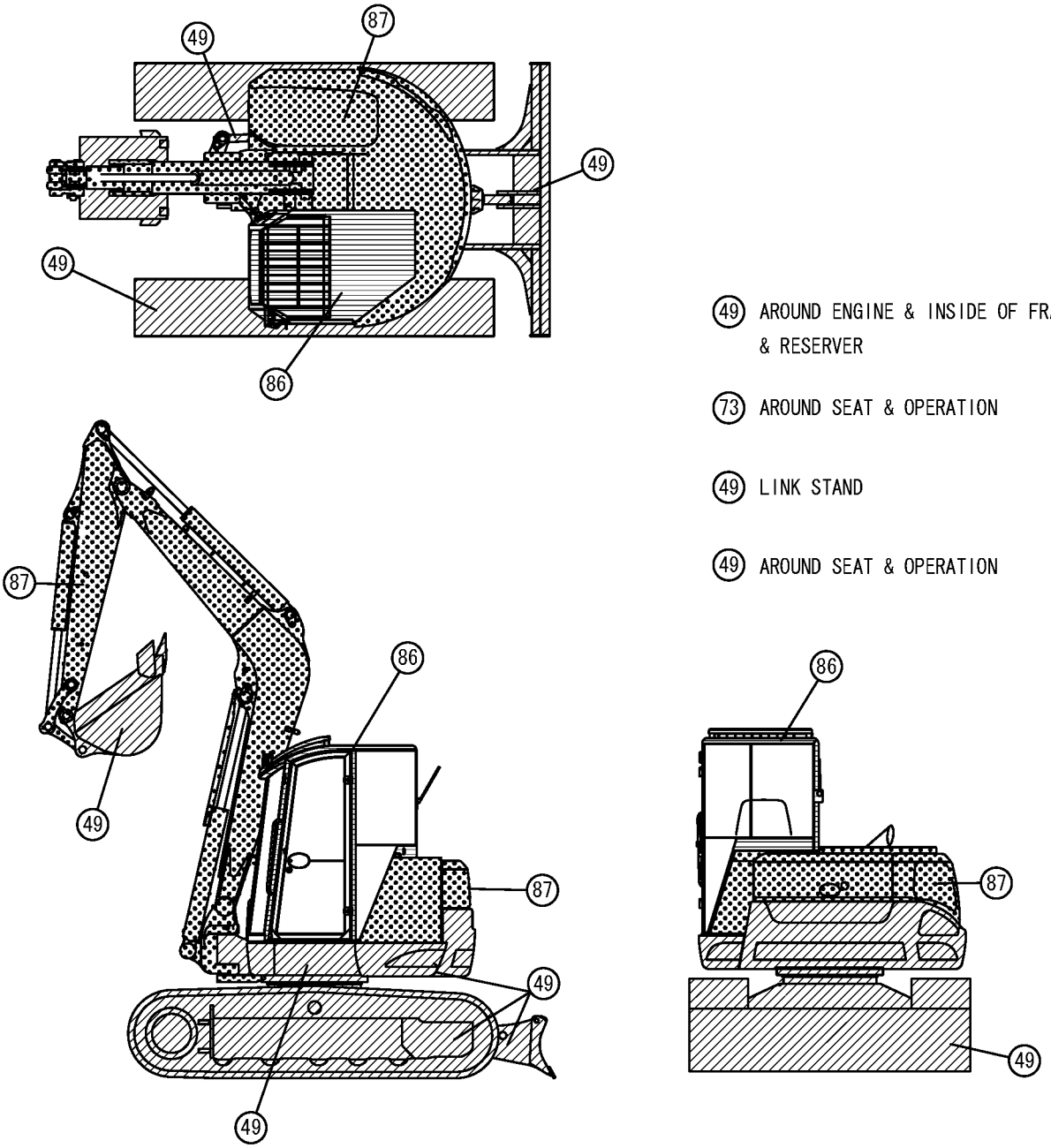

(49) AROUND ENGINE & INSIDE OF FRAME & RESERVER

(73) AROUND SEAT & OPERATION

(49) LINK STAND

(49) AROUND SEAT & OPERATION

Color Code	Desc-ription	Painted Color	Munsel No.	Paint Part No.		
				16L Can	4L Can	SPRAY
87		YANMAR New Permanent Yellow	5.15Y8.45/10.81	981101-09519	977620-40870	977620-30871
86		YANMAR New Grayish Green	2.62BG4.76/2.87	981101-09616	977620-40860	977620-30861
49		YANMAR Navy Gray	8.12B1.31/0.42	-------	TOR-91390000	TOR-94800490
73		YANMAR Warm Gray	5.52Y4.91/1.09	-------	-------	TOR-94800730

VEHICLE PAINTED COLOR(NEW)

M/#01231～

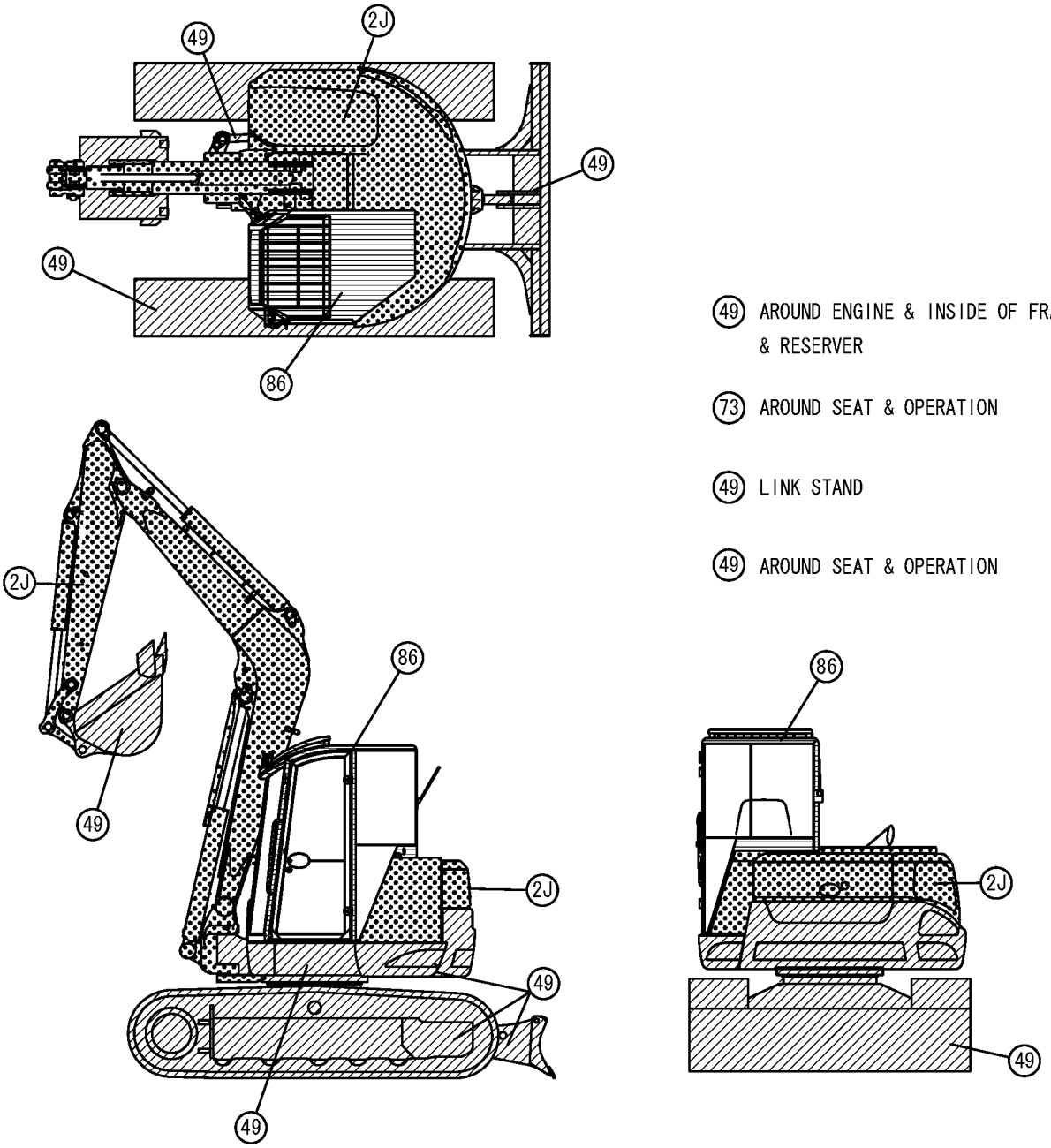

(49) AROUND ENGINE & INSIDE OF FRAME & RESERVER

(73) AROUND SEAT & OPERATION

(49) LINK STAND

(49) AROUND SEAT & OPERATION

Color Code	Desc-ription	Painted Color	Munsel No.	Paint Part No.		
				16L Can	4L Can	SPRAY
2J		YANMAR New Permanent Yellow 2	4.7Y8.4/9.4	981101-09520	977620-40871	977620-30872
86		YANMAR New Grayish Green	2.62BG4.76/2.87	981101-09616	977620-40860	977620-30861
49		YANMAR Navy Gray	8.12B1.31/0.42	-------	TOR-91390000	TOR-94800490
73		YANMAR Warm Gray	5.52Y4.91/1.09	-------	-------	TOR-94800730

PICTURESQUE INDEX(1) ・・・MAIN PARTS

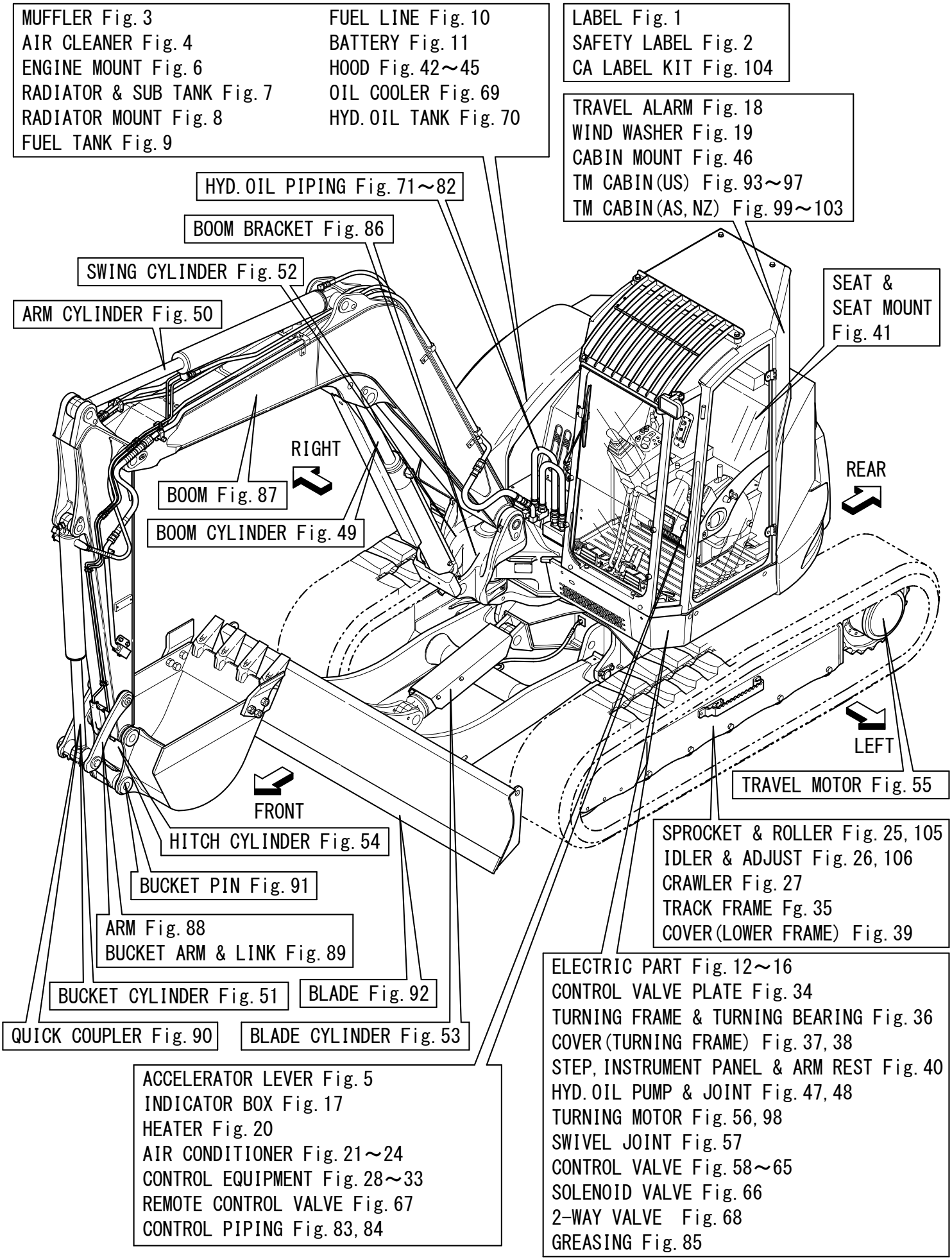

PICTURESQUE INDEX(2) ・・・HYDRAULIC SECTION

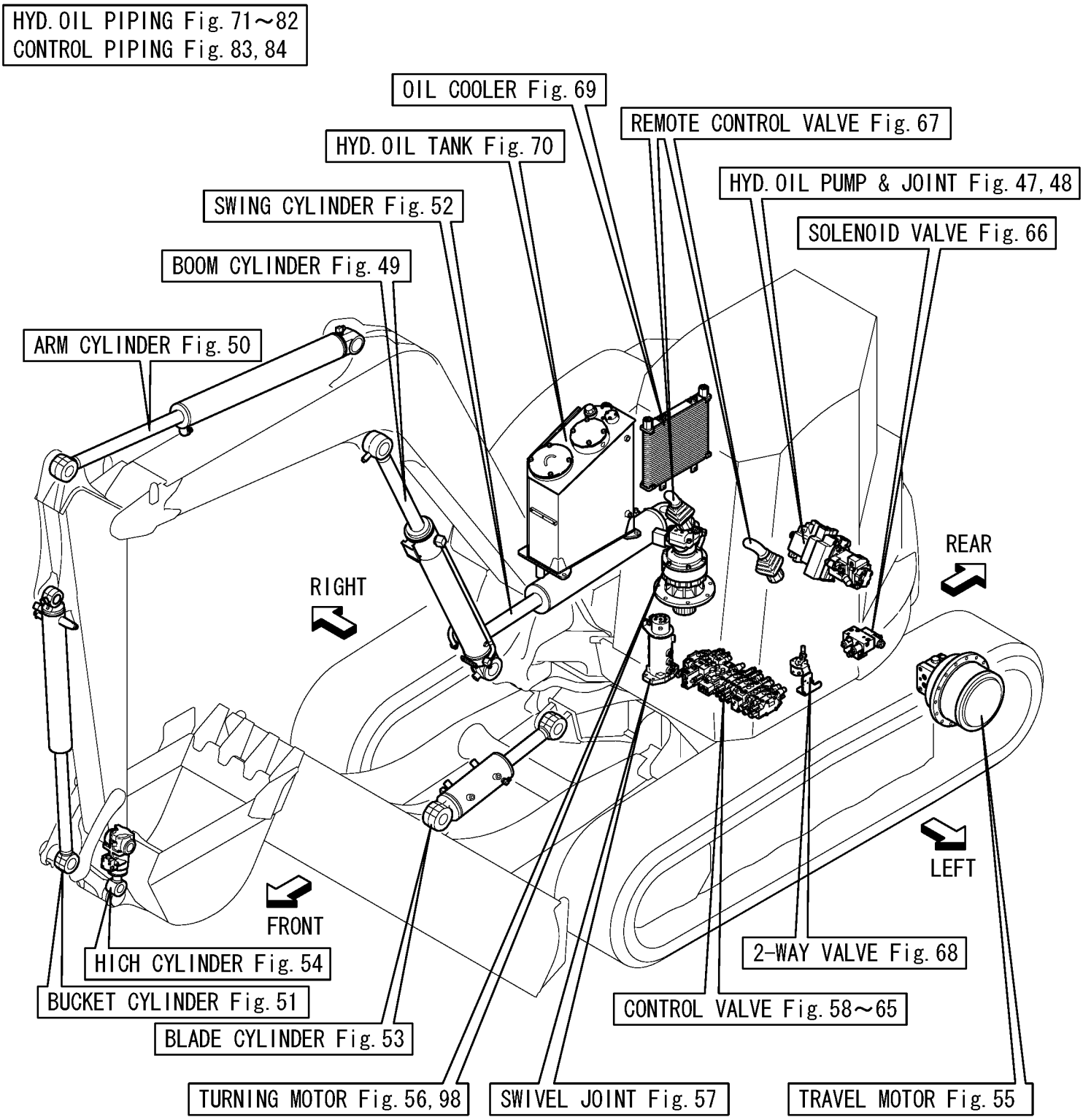

Contents

0CS10-M45602

Fig. No.	Fig. Name
VEHILCE SV100	
1.	LABEL
2.	SAFETY LABEL
3.	MUFFLER
4.	AIR CLEANER
5.	ACCELERATOR LEVER
6.	ENGINE MOUNT
7.	RADIATOR & SUB-TANK
8.	RADIATOR MOUNT
9.	FUEL TANK
10.	FUEL LINE
11.	BATTERY
12.	ELECTRIC PART(WIRING)
13.	ELECTRIC PART(WIRING : AIR CONDITIONER)
14.	ELECTRIC PART(WIRING : QUICK COUPLER)
15.	ELECTRIC PART(EQUIPMENT)
16.	ELECTRIC PART(SWITCH BOX : QUICK COUPLER)
17.	INDICATOR BOX
18.	TRAVEL ALARM
19.	WIND WASHER
20.	HEATER
21.	AIR CONDITIONER(ENGINE RELATED)
22.	AIR CONDITIONER(CONDENSER RELATED)
23.	AIR CONDITIONER(CABIN RELATED)
24.	AIR CONDITIONER(PIPING)
25.	SPROCKET & ROLLER
105.	(25A)TRACK ROLLER(K SPEC.)
26.	IDLER & ADJUST
106.	(26A)CRAWLER ADJUST(S SPEC.)
27.	CRAWLER
28.	CONTROL EQUIPMENT(LOCK LEVER & STAND)
29.	CONTROL EQUIPMENT(TRAVEL LEVER)
30.	CONTROL EQUIPMENT(BLADE LEVER)
31.	CONTROL EQUIPMENT(SWING PEDAL)
32.	CONTROL EQUIPMENT(LOW-HIGH PEDAL)
33.	CONTROL EQUIPMENT(P.T.O. PEDAL)
34.	CONTROL VALVE PLATE
35.	TRACK FRAME
36.	TURNING FRAME & TURNING BEARING
37.	COVER(TURNING FRAME : UPPER)
38.	COVER(TURNING FRAME : SIDE, UNDER)
39.	COVER(TRAVEL FRAME)
40.	STEP,INSTRUMENT PANEL & ARM REST
41.	SEAT & SEAT MOUNT
42.	HOOD(BODY)
43.	HOOD(UPPER COVER)
44.	HOOD(SIDE & REAR COVER)
45.	HOOD(FRONT)
46.	CABIN MOUNT
47.	HYD.OIL PIMP & JOINT(PREVIOUS)

Contents

0CS10-M45602

Fig. No.	Fig. Name
48.	HYD.OIL PIMP & JOINT(NEW)
49.	BOOM CYLINDER
50.	ARM CYLINDER
51.	BUCKET CYLINDER
52.	SWING CYLINDER
53.	BLADE CYLINDER
54.	HITCH CYLINDER
55.	TRAVEL MOTOR
56.	TURNING MOTOR(PREVIOUS)
98.	(56A)TURNING MOTOR(NEW)
57.	SWIVEL JOINT
58.	CONTROL VALVE(1/8)
59.	CONTROL VALVE(2/8)
60.	CONTROL VALVE(3/8)
61.	CONTROL VALVE(4/8)
62.	CONTROL VALVE(5/8)
63.	CONTROL VALVE(6/8)
64.	CONTROL VALVE(7/8)
65.	CONTROL VALVE(8/8)
66.	SOLENOID VALVE
67.	REMOTE CONTROL VALVE
68.	2-WAY VALVE
69.	OIL COOLER
70.	HYD.OIL TANK
71.	HYD.OIL PIPING(TANK - PUMP - CONTROL VALVE)

Fig. No.	Fig. Name
72.	HYD.OIL PIPING(CONTROL VALVE - TURING MOTOR, BOOM)
73.	HYD.OIL PIPING(SOLENOID V., C/V. - SWIVEL JOINT, SWING CYLINDER)
74.	HYD.OIL PIPING(RETURN 1)
75.	HYD OIL PIPING(RETURN 2)
76.	HYD.OIL PIPING(RETURN 3)
77.	HYD.OIL PIPING(PUMP - SOLENOID VALVE - RETURN)
78.	HYD.OIL PIPING(P.T.O. : FRAME END)
79.	HYD.OIL PIPING(TRACK FRAME)
80.	HYD.OIL PIPING(BOOM)
81.	HYD.OIL PIPING(P.T.O. : ARM END)
82.	HYD.OIL PIPING(QUICK COUPLER)
83.	CONTROL PIPING(RETURN)
84.	CONTROL PIPING(REMOTE CONTROL VALVE - 2-WAY VALVE)
85.	GREASING
86.	BOOM BRACKET
87.	BOOM
88.	ARM
89.	BUCKET ARM & LINK
90.	QUICK COUPLER
91.	BUCKET PIN
92.	BLADE
93.	TIM CABIN(BODY, ACCESSORY)(US)
94.	TIM CABIN(GLASS)(US)
95.	TIM CABIN(ELECTRIC)(US)
96.	TIM CABIN(FRONT WINDOW, ROOF GUARD)(US)

Contents

0CS10-M45602

Fig. No.	Fig. Name
97.	TIM CABIN(DOOR)(US)
99.	TIM CABIN(BODY, ACCESSORY)(AS,NZ)
100.	TIM CABIN(GLASS)(AS,NZ)
101.	TIM CABIN(ELECTRIC)(AS,NZ)
102.	TIM CABIN(FRONT WINDOW, ROOF GUARD)(AS,NZ)
103.	TIM CABIN(DOOR)(AS,NZ)
104.	CA LABEL KIT(OPTIONAL)

Fig. No.	Fig. Name

Fig.1. LABEL

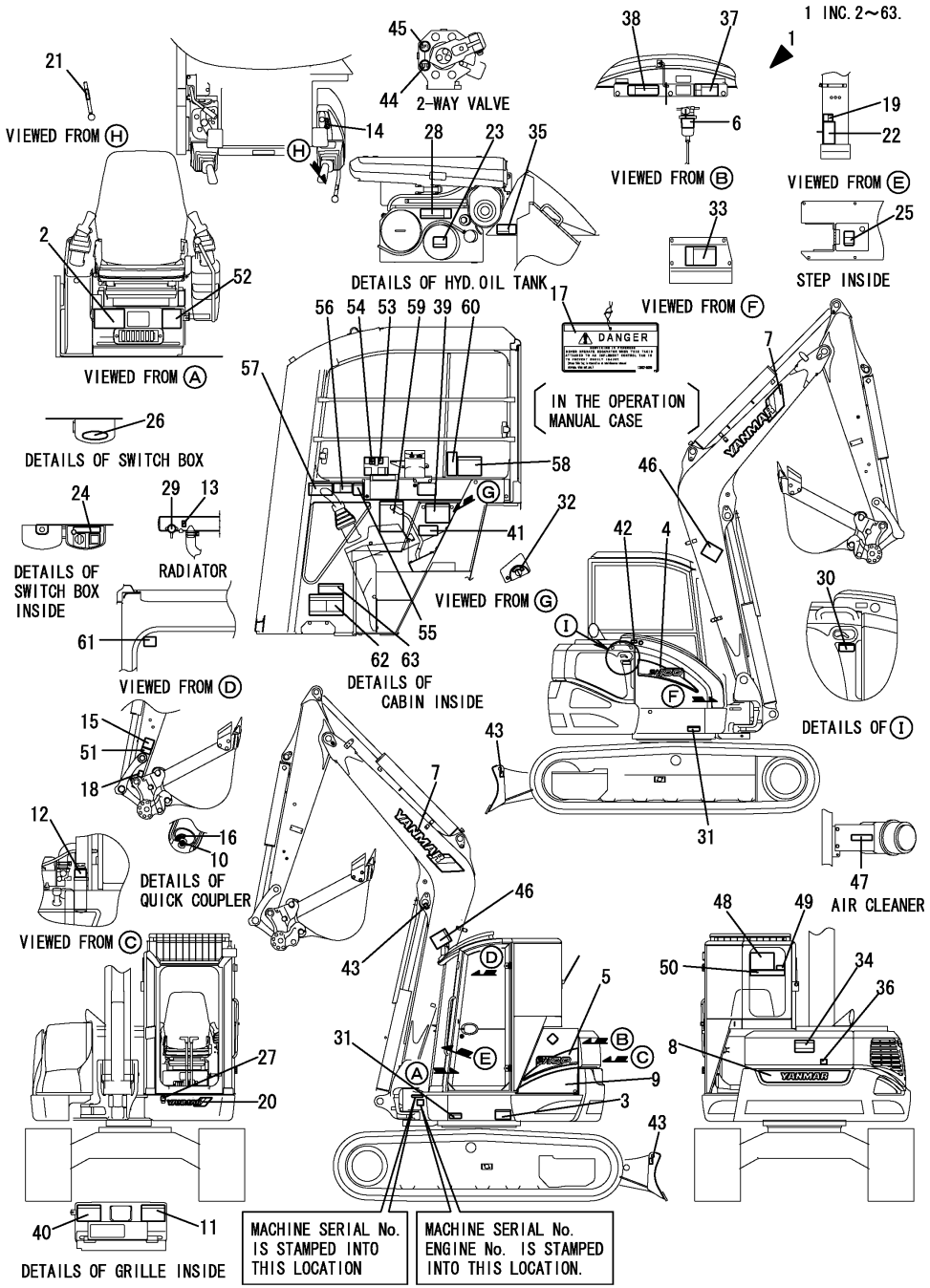

(A)=SV100(US) (D)=
(B)=SV100(AS) (E)=
(C)=SV100(NZ) (F)=

No.	Lev.	Parts No.	Description	Q'ty (A)	(B)	(C)	(D)	(E)	(F)	I	R
1	1	772499-03110	LABEL SET SV100(US)	1	1	1					
1-1	1	772499-03111	LABEL SET SV100(US)	1	1	1				S	
	(A=M/#00758)	(B=M/#00758)	(C=M/#00758)								
2	2	172499-03110	LAVEL,OIL & WATER US	1	1	1					
2-1	2	172499-03111	LAVEL,OIL & WATER US	1	1	1				R	
	(A=M/#01170)	(B=M/#01170)	(C=M/#01170)								
3	2	172472-03141	LABEL, SUPPORT US	1	1	1					
4	2	172499-03140	LABEL,SV100 R	1	1	1					
5	2	172499-03150	LABEL,SV100 L	1	1	1					
6	2	172A07-03160	LABEL	1	1	1					
7	2	172187-03160	LABEL, BOOM	2	2	2					
7-1	2	172A21-03220	LABEL,BRAND AYR 950	2	2	2				N	
	(A=M/#00758)	(B=M/#00758)	(C=M/#00758)								
8	2	172478-03160	LABEL,REAR	1	1	1					
9	2	172499-03160	LABEL,LOWR	1	1	1					
9-1	2	172499-03161	LABEL,LOWR	1	1	1				S	
	(A=M/#00758)	(B=M/#00758)	(C=M/#00758)								
10	2	172958-03160	LABEL	1	1	1					
11	2	172472-03171	LABEL,FUSE US	1	1	1					
12	2	172A38-03200	LABEL, SUB-TANK US	1	1	1					
12-1	2	172A38-03201	LABEL, SUB-TANK US	1	1	1				N	
	(A=M/#00758)	(B=M/#00758)	(C=M/#00758)								
13	2	172A38-03210	LABEL,ANTI-FREEZING	1	1	1					
13-1	2	172A38-03211	LABEL,ANTI-FREEZING	1	1	1				N	
	(A=M/#00758)	(B=M/#00758)	(C=M/#00758)								
14	2	172458-03220	LABEL,ACCELERATOR	1	1	1					
15	2	172472-03230	LABEL,OPERATION PIN	1	1	1					
16	2	172458-03240	LABEL,LOCK	1	1	1					
17	2	172437-03250	TAG ASSY, CAUTION	1	1	1					
17-1	2	172437-03251	TAG ASSY, CAUTION	1	1	1				N	
	(A=M/#00680)	(B=M/#00680)	(C=M/#00680)								
17-2	2	172437-03252	TAG ASSY, CAUTION	1	1	1				N	
	(A=M/#00758)	(B=M/#00758)	(C=M/#00758)								
18	2	172472-03261	LABEL, FINGER US	1	1	1					
19	2	172472-03271	LABEL, SAND US	1	1	1					
20	2	172524-03271	LABEL	1	1	1					
20-1	2	172488-03170	LABEL	1	1	1				N	
	(A=M/#00758)	(B=M/#00758)	(C=M/#00758)								
21	2	172183-03280	LABEL,LOCK	1	1	1					
22	2	172472-03281	LABEL, WARNING HITCH	1	1	1					
23	2	172463-03290	LABEL,HYD.OIL US	1	1	1					
24	2	172472-03290	LABEL,SWITCH	1	1	1					
25	2	172438-03300	LABEL	1	1	1					
26	2	172472-03300	LABEL,COVER	1	1	1					
27	2	172146-03321	LABEL, GREASE	1	1	1					
28	2	172437-03322	LABEL, HYD.OIL TANK	1	1	1					
29	2	172462-03320	LABEL	1	1	1					
30	2	172463-03330	LABEL,COVER	1	1	1					
31	2	172437-03352	LABEL, GREASE CYL.	2	2	2					
32	2	172141-03360	LABEL, START SWITCH	1	1	1					
33	2	172437-03361	LABEL, BATTERY US	1	1	1					

N:Old $\overset{\text{Yes}}{\underset{\text{No}}{\leftrightarrow}}$ New, Q:Old $\overset{\text{No}}{\underset{\text{Yes}}{\leftrightarrow}}$ New, R:Old $\overset{\text{Yes}}{\underset{\text{Yes}}{\leftrightarrow}}$ New, S:Old $\overset{\text{No}}{\underset{\text{No}}{\leftrightarrow}}$ New, W:Add, Z:Discontinued, F:Interchangeable by set, K:Q'ty Change

++ CONTINUE ++

Copyright (C) YANMAR CO., LTD. All RightsReserved.

Fig.1. LABEL

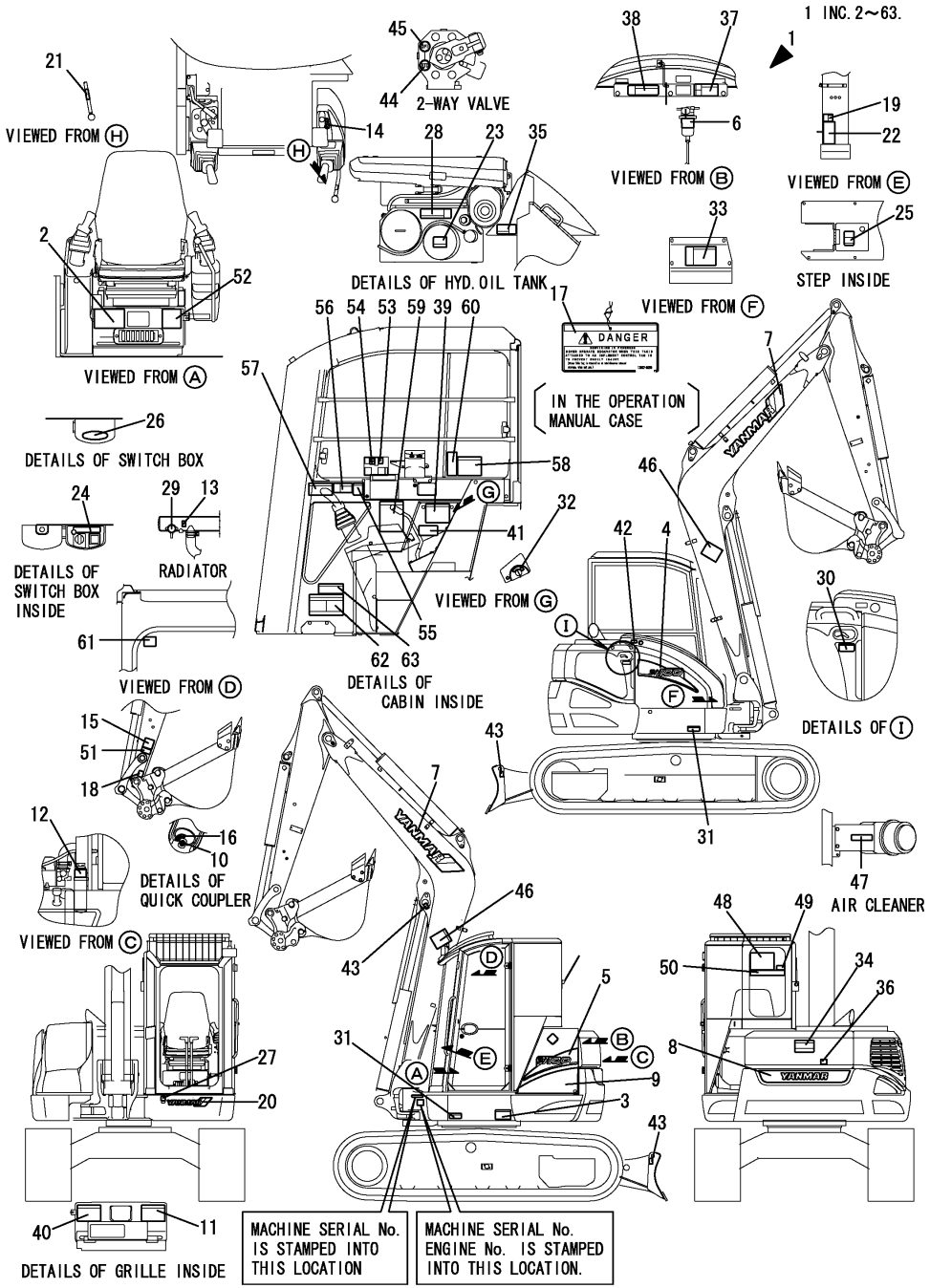

(A)=SV100(US) (D)=
(B)=SV100(AS) (E)=
(C)=SV100(NZ) (F)=

No.	Lev.	Parts No.	Description	Q'ty (A)	(B)	(C)	(D)	(E)	(F)	I	R
34	2	172437-03381	LABEL,SWING AREA US	1	1	1					
35	2	172437-03391	LABEL, RADIATOR US	1	1	1					
36	2	172437-03402	LABEL, ENG,COVER US	1	1	1					
37	2	172A36-03411	LABEL, ENG ROOM	1	1	1					
38	2	172437-03422	LABEL, MUFFLER US	1	1	1					
39	2	172437-03432	LABEL, STEERING US	1	1	1					
40	2	172478-03430	LABEL,GREASING	1	1	1					
41	2	172437-03471	LABEL, LEVER LOCK US	1	1	1					
42	2	172437-03501	LABEL, FUEL US	1	1	1					
43	2	172437-03511	LABEL, HOOK US	3	3	3					
44	2	172437-03610	LABEL	1	1	1					
45	2	172437-03620	LABEL	1	1	1					
46	2	172187-03941	LABEL, BOOM US	2	2	2					
47	2	172125-03951	LABEL, AIR CLEANER	1	1	1					
48	2	172499-03120	LABEL,LIFT Q US	1	1	1					
48-1	2	172499-03121	LABEL,LIFT Q US	1	1	1				N	
	(A=M/#01148)	(B=M/#01148)	(C=M/#01148)								
49	2	172472-03241	LABEL, PIN US	1	1	1					
50	2	172472-03250	LABEL,OPERATION Q US	1	1	1					
51	2	172472-03330	LABEL,LOCK PIN(US	1	1	1					
52	2	172499-03280	LAVEL,ADJUST CRAWLER	1	1	1					
53	2	172496-03200	LABEL, OPERATION	1	1	1					
54	2	172496-03260	LABEL, P.T.O.	1	1	1					
55	2	172499-03270	LABEL,TOPS US	1	1	1					
56	2	172437-03301	LABEL, MANUAL US	1	1	1					
56-1	2	172437-03302	LABEL, MANUAL US	1	1	1				N	
	(A=M/#00758)	(B=M/#00758)	(C=M/#00758)								
57	2	172437-03311	LABEL, SLOPE US	1	1	1					
57-1	2	172437-03312	LABEL,SLOPE US	1	1	1				N	
	(A=M/#00680)	(B=M/#00680)	(C=M/#00680)								
58	2	172437-03342	LABEL, TRANSPORT US	1	1	1					
58-1	2	172437-03343	LABEL, TRANSPORT US	1	1	1				N	
	(A=M/#00758)	(B=M/#00758)	(C=M/#00758)								
59	2	172437-03372	LABEL, NEUTRAL US	1	1	1					
60	2	172437-03451	LABEL, SEAT BELT US	1	1	1					
61	2	172437-03551	LABEL, WINDOW US	1	1	1					
62	2	172437-03601	LABEL, 2-WAY US	1	1	1					
63	2	172499-03100	LABEL SPEC US	1	1	1					

N:Old $\xleftarrow[\text{No}]{\text{Yes}}$ New, Q:Old $\xleftarrow[\text{Yes}]{\text{No}}$ New, R:Old $\xleftarrow[\text{Yes}]{\text{Yes}}$ New, S:Old $\xleftarrow[\text{No}]{\text{No}}$ New, W:Add, Z:Discontinued, F:Interchangeable by set, K:Q'ty Change

Copyright (C) YANMAR CO., LTD. All RightsReserved.

Fig.2. SAFETY LABEL

(A)=SV100(US) (D)=
(B)=SV100(AS) (E)=
(C)=SV100(NZ) (F)=

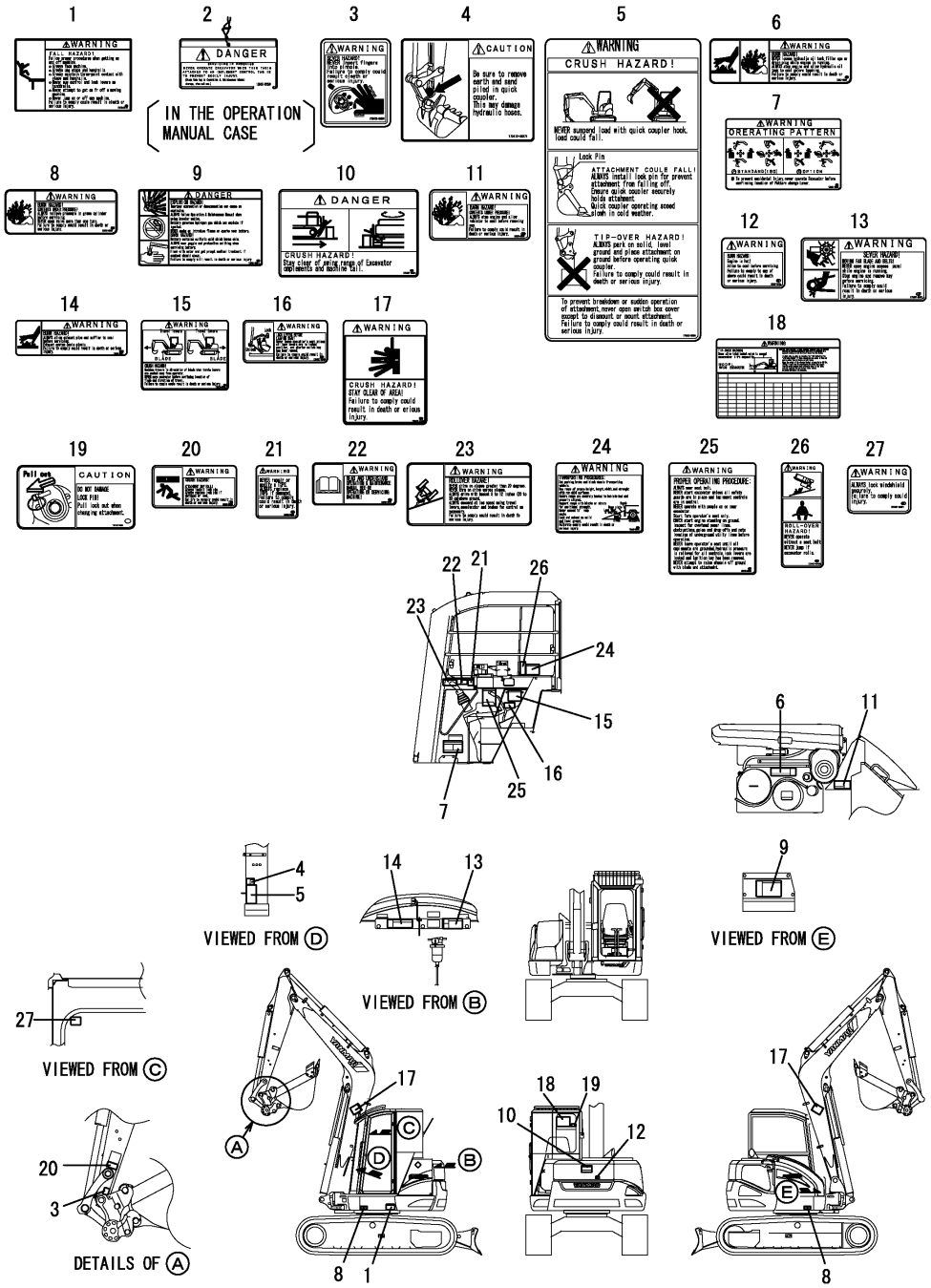

No.	Lev.	Parts No.	Description	Q'ty (A)	(B)	(C)	(D)	(E)	(F)	I	R
1	1	172472-03141	LABEL, SUPPORT US	1	1	1					
2	1	172437-03250	TAG ASSY, CAUTION	1	1	1					
2-1	1	172437-03251	TAG ASSY, CAUTION	1	1	1				N	
	(A=M/#00680)	(B=M/#00680)	(C=M/#00680)								
2-2	1	172437-03252	TAG ASSY, CAUTION	1	1	1				N	
	(A=M/#00758)	(B=M/#00758)	(C=M/#00758)								
3	1	172472-03261	LABEL, FINGER US	1	1	1					
4	1	172472-03271	LABEL, SAND US	1	1	1					
5	1	172472-03281	LABEL, WARNING HITCH	1	1	1					
6	1	172437-03322	LABEL, HYD.OIL TANK	1	1	1					
7	1	172437-03601	LABEL, 2-WAY US	1	1	1					
8	1	172437-03352	LABEL, GREASE CYL.	2	2	2					
9	1	172437-03361	LABEL, BATTERY US	1	1	1					
10	1	172437-03381	LABEL,SWING AREA US	1	1	1					
11	1	172437-03391	LABEL, RADIATOR US	1	1	1					
12	1	172437-03402	LABEL, ENG,COVER US	1	1	1					
13	1	172A36-03411	LABEL, ENG ROOM	1	1	1					
14	1	172437-03422	LABEL, MUFFLER US	1	1	1					
15	1	172437-03432	LABEL, STEERING US	1	1	1					
16	1	172437-03471	LABEL, LEVER LOCK US	1	1	1					
17	1	172187-03941	LABEL, BOOM US	2	2	2					
18	1	172499-03120	LABEL,LIFT Q US	1	1	1					
18-1	1	172499-03121	LABEL,LIFT Q US	1	1	1				N	
	(A=M/#01148)	(B=M/#01148)	(C=M/#01148)								
19	1	172472-03241	LABEL, PIN US	1	1	1					
20	1	172472-03330	LABEL,LOCK PIN(US	1	1	1					
21	1	172499-03270	LABEL,TOPS US	1	1	1					
22	1	172437-03301	LABEL, MANUAL US	1	1	1					
22-1	1	172437-03302	LABEL, MANUAL US	1	1	1				N	
	(A=M/#00758)	(B=M/#00758)	(C=M/#00758)								
23	1	172437-03311	LABEL, SLOPE US	1	1	1					
23-1	1	172437-03312	LABEL,SLOPE US	1	1	1				N	
	(A=M/#00680)	(B=M/#00680)	(C=M/#00680)								
24	1	172437-03342	LABEL, TRANSPORT US	1	1	1					
24-1	1	172437-03343	LABEL, TRANSPORT US	1	1	1				N	
	(A=M/#00758)	(B=M/#00758)	(C=M/#00758)								
25	1	172437-03372	LABEL, NEUTRAL US	1	1	1					
26	1	172437-03451	LABEL, SEAT BELT US	1	1	1					
27	1	172437-03551	LABEL, WINDOW US	1	1	1					

N:Old $\xleftarrow[\text{No}]{\text{Yes}}$ New, Q:Old $\xleftarrow[\text{Yes}]{\text{No}}$ New, R:Old $\xleftarrow[\text{Yes}]{\text{Yes}}$ New, S:Old $\xleftarrow[\text{No}]{\text{No}}$ New, W:Add, Z:Discontinued, F:Interchangeable by set, K:Q'ty Change

Copyright (C) YANMAR CO., LTD. All RightsReserved.

Fig.3. MUFFLER

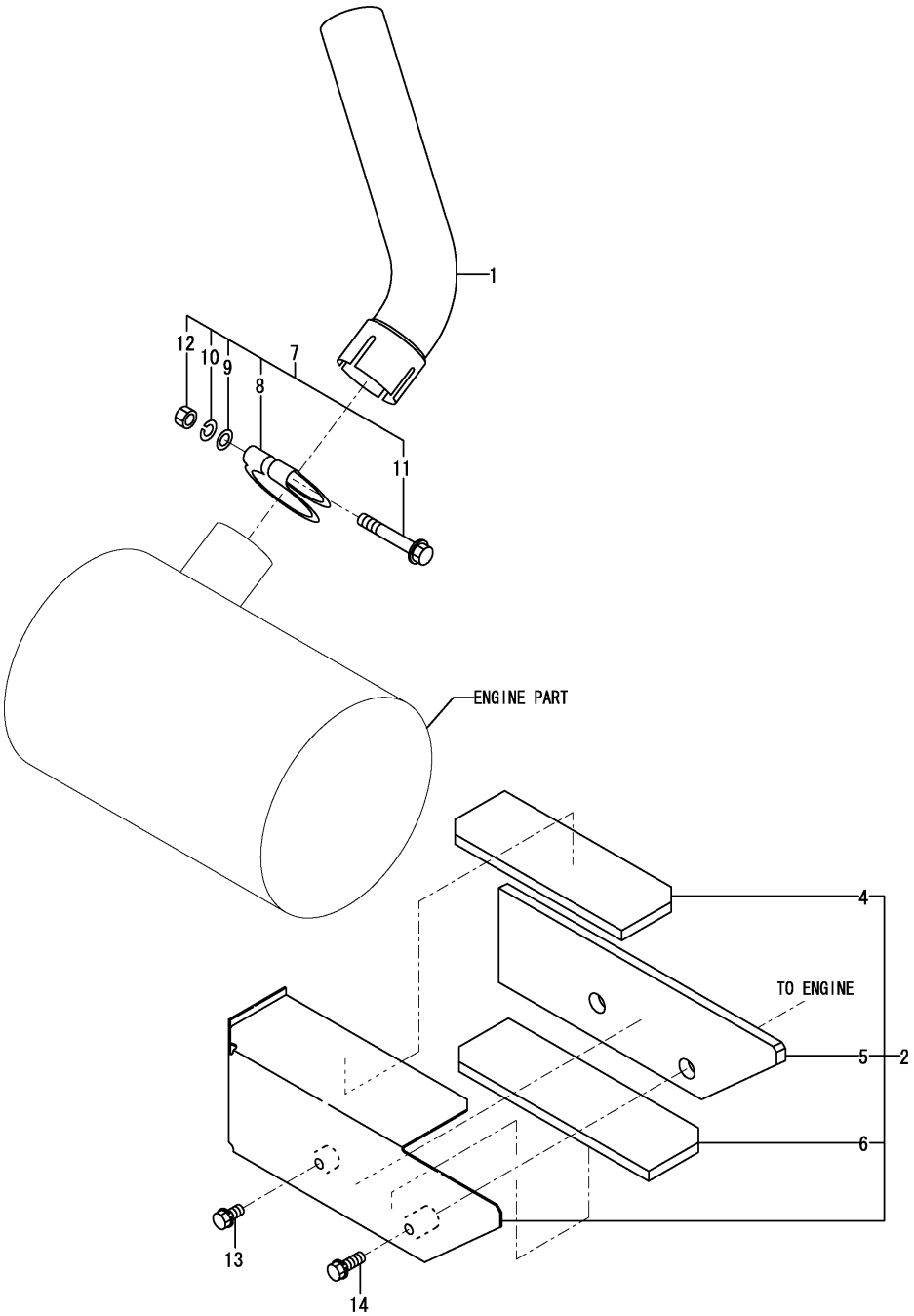

(A)=SV100(US) (D)=
(B)=SV100(AS) (E)=
(C)=SV100(NZ) (F)=

No.	Lev.	Parts No.	Description	Q'ty (A)	(B)	(C)	(D)	(E)	(F)	I	R
1	1	172499-11300	PIPE, EXHAUST	1	1	1					
2	1	172499-11350	COVER ASSY	1	1	1					
4	2	172499-11380	INSURATOR MAT A	1	1	1					
5	2	172499-11390	INSURATOR MAT B	1	1	1					
6	2	172499-11400	INSURATOR MAT C	1	1	1					
7	1	129640-13590	CLAMP ASSY	1	1	1					
8	2	129640-13580	CLAMP	1	1	1					
9	2	22117-100000	WASHER, 10	1	1	1					
10	2	22217-100000	WASHER, SPRING 10	1	1	1					
11	2	26106-100652	BOLT, M10X 65 PLATED	1	1	1					
12	2	26706-100002	NUT, M10	1	1	1					
13	1	26013-080252	BOLT, M8X 25	1	1	1					
14	1	26013-080352	BOLT, M8X 35	1	1	1					

N:Old $\frac{\text{Yes}}{\text{No}}$ New, Q:Old $\frac{\text{No}}{\text{Yes}}$ New, R:Old $\frac{\text{Yes}}{\text{Yes}}$ New, S:Old $\frac{\text{No}}{\text{No}}$ New, W:Add, Z:Discontinued, F:Interchangeable by set, K:Q'ty Change

Copyright (C) YANMAR CO., LTD. All RightsReserved.

Fig.4. AIR CLEANER

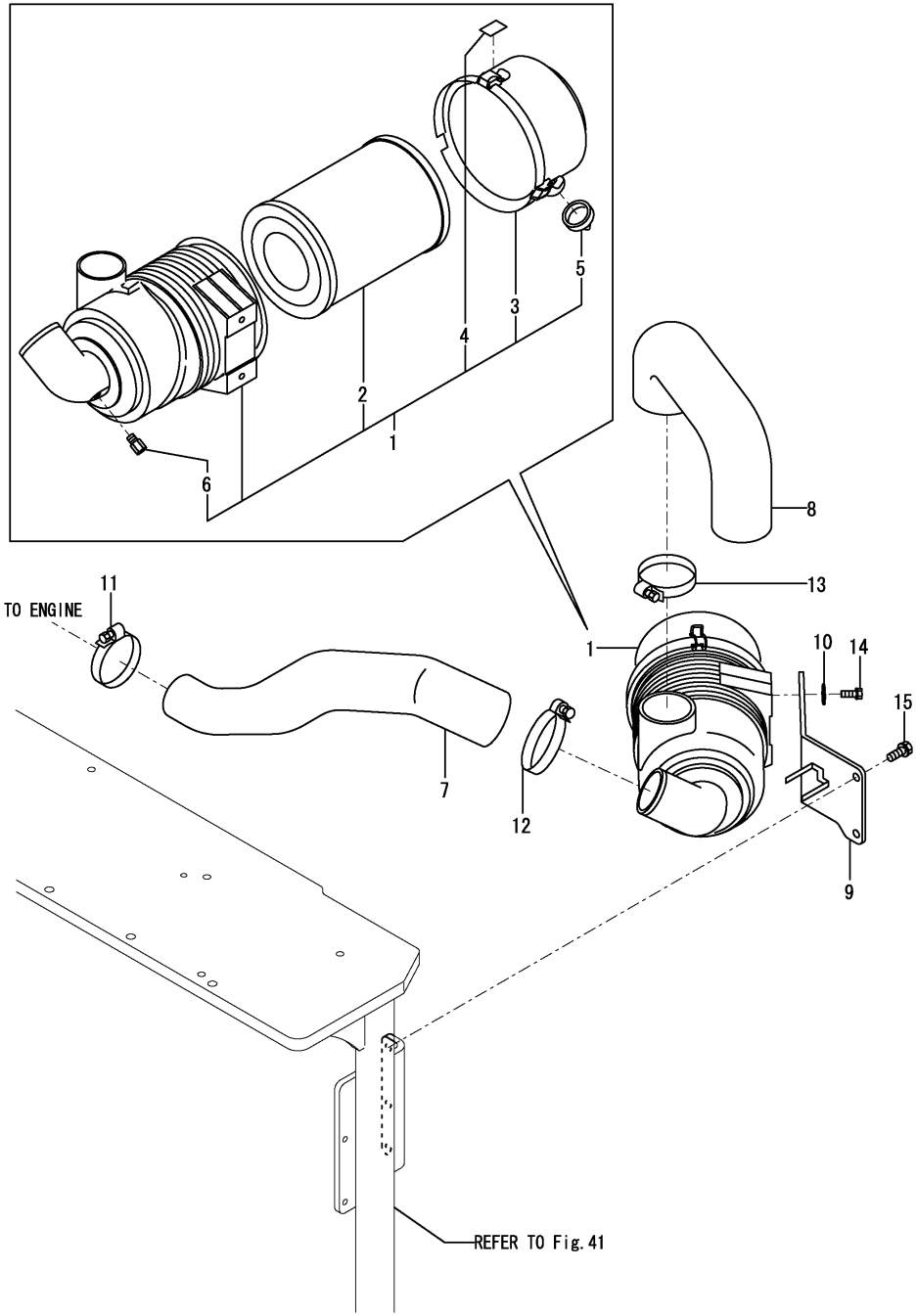

(A)=SV100(US) (D)=
(B)=SV100(AS) (E)=
(C)=SV100(NZ) (F)=

No.	Lev.	Parts No.	Description	Q'ty (A)	(B)	(C)	(D)	(E)	(F)	I	R
1	1	172499-11500	CLEANER ASSY, AIR	1	1	1					
2	2	129935-12520	ELEMENT	1	1	1					
2-1	2	119160-12560	ELEMENT, OUTER	1	1	1				N	
	(A=MXXXXX)	(B=MXXXXX)	(C=MXXXXX)								
3	2	119160-12530	COVER ASSY	1	1	1					
4	2	129418-12530	LABEL, MARK	1	1	1					
5	2	119160-12540	VALVE	1	1	1					
6	2	121820-12590	NIPPLE	1	1	1					
7	1	172499-11550	HOSE, AIR INTAKE	1	1	1					
8	1	172499-11560	HOSE, AIR INTAKE	1	1	1					
9	1	172455-11602	BRACKET, AIR CLEANER	1	1	1					
9-1	1	172455-11603	BRACKET ASSY	1	1	1				N	
	(A=M/#00600)	(B=M/#00600)	(C=M/#00600)								
10	1	22137-080000	WASHER, 8	2	2	2					
11	1	23000-070000	CLAMP, 70	1	1	1					
12	1	23000-080000	CLAMP, 80	1	1	1					
13	1	23000-090000	CLAMP, 90	1	1	1					
14	1	26013-080202	BOLT, M8X 20	2	2	2					
15	1	26013-100202	BOLT, M10X 20	2	2	2					

N:Old $\xleftrightarrow[\text{No}]{\text{Yes}}$ New, Q:Old $\xleftrightarrow[\text{Yes}]{\text{No}}$ New, R:Old $\xleftrightarrow[\text{Yes}]{\text{Yes}}$ New, S:Old $\xleftrightarrow[\text{No}]{\text{No}}$ New, W:Add, Z:Discontinued, F:Interchangeable by set, K:Q'ty Change

Copyright (C) YANMAR CO., LTD. All RightsReserved.

Fig.5. ACCELERATOR LEVER

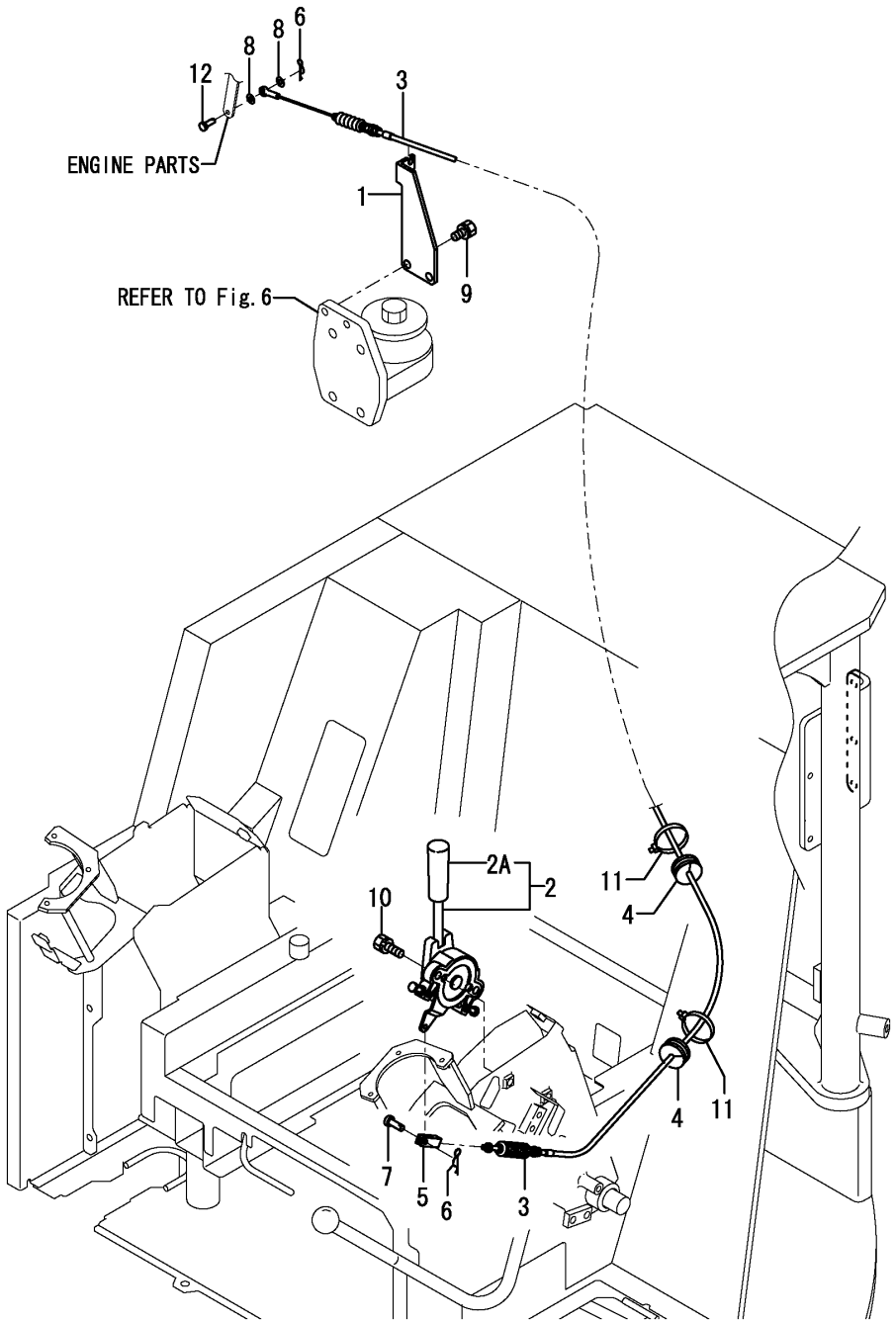

(A)=SV100(US) (D)=
(B)=SV100(AS) (E)=
(C)=SV100(NZ) (F)=

No.	Lev.	Parts No.	Description	Q'ty (A)	(B)	(C)	(D)	(E)	(F)	I	R
1	1	172A21-12100	SUPPORT, CABLE	1	1	1					
2	1	172458-12100	LEVER,ACCELERATOR	1	1	1					
2A	2	172165-12140	GRIP	1	1	1				W	
	(A=M/#00699)	(B=M/#00699)	(C=M/#00699)								
2A-1	2	172A79-12150	GRIP	1	1	1				N	
	(A=MXXXXX)	(B=MXXXXX)	(C=MXXXXX)								
3	1	172499-12100	CABLE, ACCELERATOR	1	1	1					
3-1	1	172499-12101	CABLE, ACCELERATOR	1	1	1				N	
	(A=M/#00949)	(B=M/#00949)	(C=M/#00949)								
3-2	1	172499-12102	CABLE, ACCELERATOR	1	1	1				N	
	(A=M/#01522)	(B=M/#01522)	(C=M/#01522)								
3-3	1	172499-12103	CABLE, ACCELERATOR	1	1	1				N	
	(A=M/#01726)	(B=M/#01726)	(C=M/#01726)								
4	1	172455-12140	GROMMET	2	2	2					
5	1	172137-12270	JOINT, CABLE	1	1	1					
6	1	1C6281-52310	PIN, SNAP 6	2	2	2					
7	1	1A1040-56900	PIN, 6X17	2	2	2					
7-1	1	1A1040-56900	PIN, 6X17	1	1	1				K	
	(A=M/#00719)	(B=M/#00719)	(C=M/#00719)								
8	1	22137-060000	WASHER, 6	2	2	2					
9	1	26013-100162	BOLT, M10X 16	2	2	2					
10	1	26013-100252	BOLT, M10X 25	2	2	2					
11	1	933168-55770	BAND 146	2	2	2					
12	1	172113-12522	PIN	1	1	1				W	
	(A=M/#00719)	(B=M/#00719)	(C=M/#00719)								

N:Old $\overset{\text{Yes}}{\underset{\text{No}}{\leftrightarrow}}$ New, Q:Old $\overset{\text{No}}{\underset{\text{Yes}}{\leftrightarrow}}$ New, R:Old $\overset{\text{Yes}}{\underset{\text{Yes}}{\leftrightarrow}}$ New, S:Old $\overset{\text{No}}{\underset{\text{No}}{\leftrightarrow}}$ New, W:Add, Z:Discontinued, F:Interchangeable by set, K:Q'ty Change

Copyright (C) YANMAR CO., LTD. All RightsReserved.

Fig.6. ENGINE MOUNT

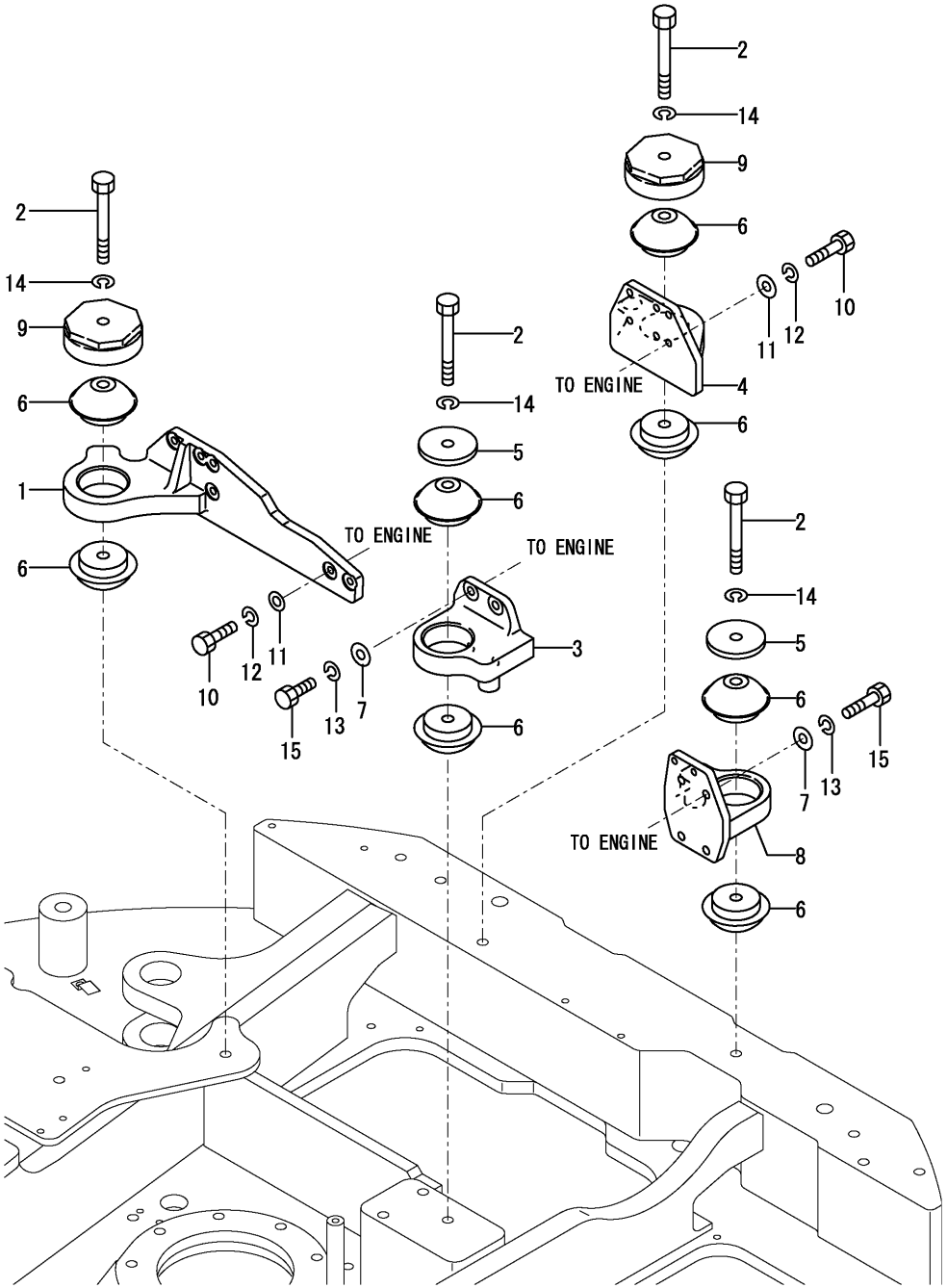

(A)=SV100(US) (D)=
(B)=SV100(AS) (E)=
(C)=SV100(NZ) (F)=

No.	Lev.	Parts No.	Description	Q'ty (A)	(B)	(C)	(D)	(E)	(F)	I	R
1	1	172499-13100	BRACKET RR	1	1	1					
2	1	172499-13110	BOLT M16X130	4	4	4					
3	1	172455-13131	BRACKET FR	1	1	1					
4	1	172455-13151	BRACKET LR	1	1	1					
5	1	172162-13170	WASHER	2	2	2					
6	1	172162-13180	MOUNT,ENGINE	8	8	8					
7	1	172165-13220	WASHER	8	8	8					
8	1	172187-13731	BRACKET RF	1	1	1					
9	1	172187-13830	STOPPER ASSY	2	2	2					
10	1	1E6480-16920	BOLT 10X35	12	12	12					
10-1	1	172A21-13100	BOLT 10X35,11T	12	12	12				N	
	(A=M/#01663)	(B=M/#01663)	(C=M/#01663)								
11	1	172137-46040	SEAT, SPRING	12	12	12					
11-1	1	172137-46041	SEAT, SPRING	12	12	12				N	
	(A=M/#00978)	(B=M/#00978)	(C=M/#00978)								
11-2	1	172137-46042	SEAT, SPRING	12	12	12				N	
	(A=M/#01011)	(B=M/#01011)	(C=M/#01011)								
12	1	22217-100000	WASHER, SPRING 10	12	12	12					
13	1	22217-120000	WASHER, SPRING 12	8	8	8					
14	1	22217-160000	WASHER, SPRING 16	4	4	4					
15	1	26076-120352	BOLT, 10.912X 35	8	8	8					

N:Old $\xleftarrow[\text{No}]{\text{Yes}}$ New, Q:Old $\xleftarrow[\text{Yes}]{\text{No}}$ New, R:Old $\xleftarrow[\text{Yes}]{\text{Yes}}$ New, S:Old $\xleftarrow[\text{No}]{\text{No}}$ New, W:Add, Z:Discontinued, F:Interchangeable by set, K:Q'ty Change

Copyright (C) YANMAR CO., LTD. All RightsReserved.

Fig.7. RADIATOR & SUB-TANK

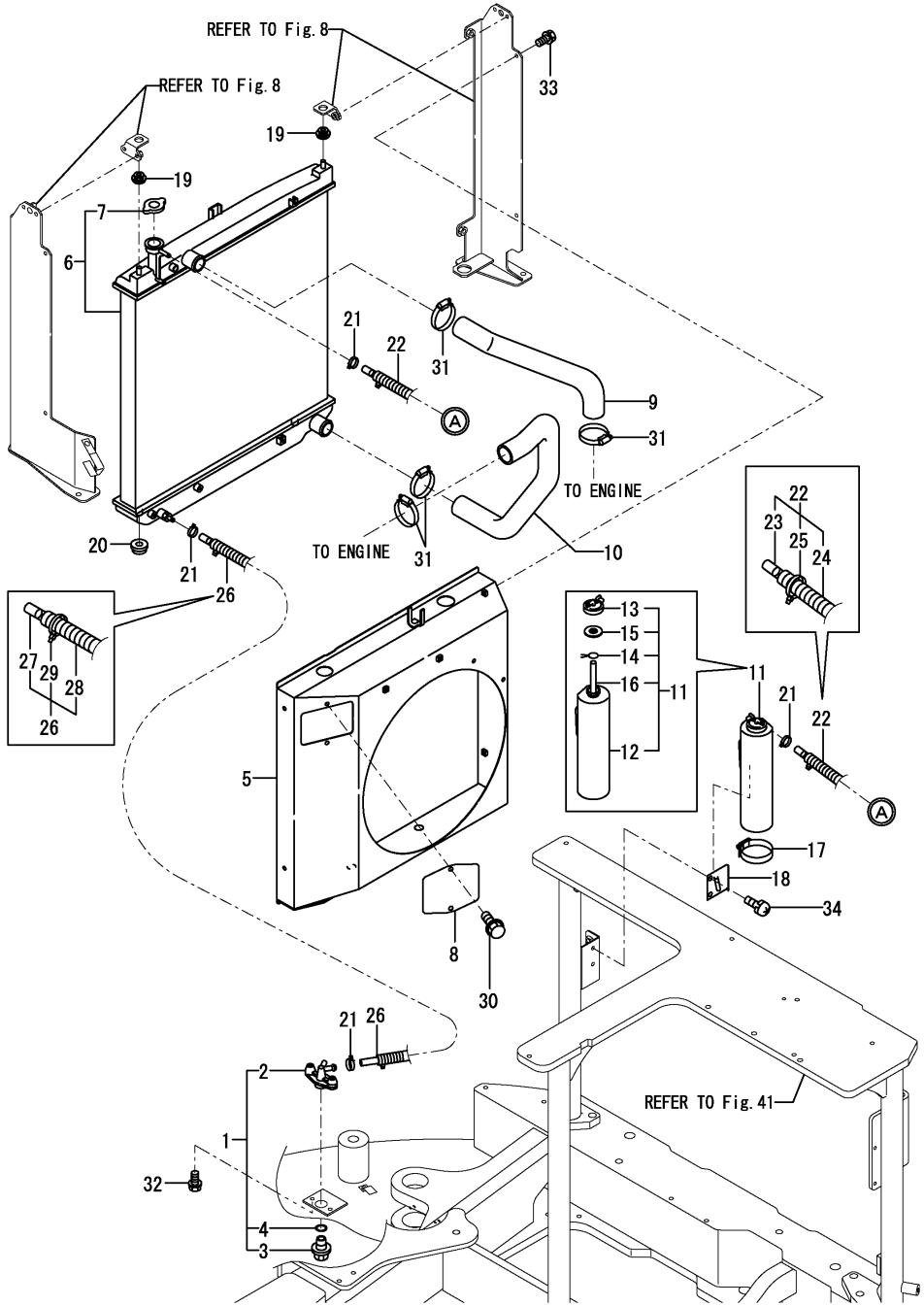

(A)=SV100(US) (D)=
(B)=SV100(AS) (E)=
(C)=SV100(NZ) (F)=

No.	Lev.	Parts No.	Description	Q'ty (A)	(B)	(C)	(D)	(E)	(F)	I	R
1	1	172444-13210	COCK ASSY, 2-WAY	1	1	1					
2	2	172444-13220	BODY	1	1	1					
3	2	121250-49121	PLUG, DRAIN	1	1	1					
4	2	24311-000160	O-RING, 1AP16.0	1	1	1					
5	1	172499-13420	SHROUD ASSY	1	1	1					
6	1	172499-13450	RADIATOR	1	1	1					
7	2	129107-44590	CAP, RADIATOR	1	1	1					
8	1	172499-13490	PLATE	1	1	1					
9	1	172499-13500	PIPE, WATER	1	1	1					
10	1	172499-13510	PIPE, WATER	1	1	1					
11	1	171064-44510	TANK ASSY, SUB	1	1	1					
12	2	171064-44520	BODY, TANK	1	1	1					
13	2	121450-44531	CAP	1	1	1					
14	2	124450-44560	RETAINER	1	1	1					
15	2	121470-44581	GASKET	1	1	1					
16	2	23065-070225	HOSE 7X 225	1	1	1					
17	1	124450-44550	BAND	1	1	1					
18	1	121256-44600	BRACKET, SUB TANK	1	1	1					
19	1	184016-44700	RUBBER, CUSHION UP	2	2	2					
20	1	184016-44710	RUBBER, CUSHION LW	2	2	2					
21	1	124766-59050	CLIP, HOSE 12	4	4	4					
22	1	184015-59190	HOSE ASSY, FUEL	1	1	1					
23	2	172120-14660	HOSE	1	1	1					
24	2	184015-59200	TUBE, CORRUGATED	1	1	1					
25	2	933168-55770	BAND 146	2	2	2					
26	1	184015-59250	HOSE	1	1	1					
27	2	172151-13371	HOSE	1	1	1					
28	2	184015-59260	TUBE, CORRUGATED	1	1	1					
29	2	933168-55770	BAND 146	2	2	2					
30	1	172519-63240	BOLT	2	2	2					
31	1	23001-048000	CLAMP, HOSE 48	4	4	4					
32	1	26013-080162	BOLT, M8X 16	2	2	2					
33	1	26013-080202	BOLT, M8X 20	4	4	4					
34	1	26022-080162	SCREW, M8X16	2	2	2					

N:Old $\xleftarrow[\text{No}]{\text{Yes}}$ New, Q:Old $\xleftarrow[\text{Yes}]{\text{No}}$ New, R:Old $\xleftarrow[\text{Yes}]{\text{Yes}}$ New, S:Old $\xleftarrow[\text{No}]{\text{No}}$ New, W:Add, Z:Discontinued, F:Interchangeable by set, K:Q'ty Change

Copyright (C) YANMAR CO., LTD. All RightsReserved.

Fig.8. RADIATOR MOUNT

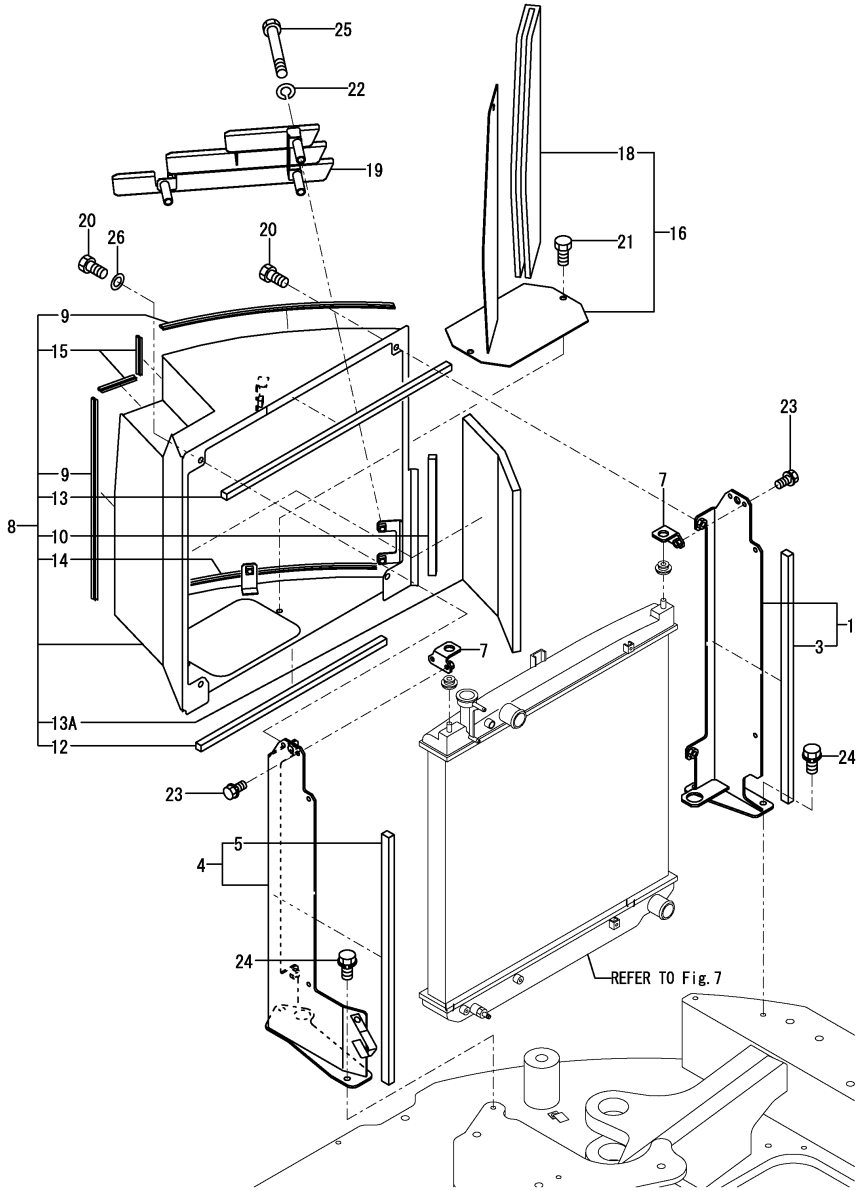

Remarks
(1)PLEASE USE THIS PART WITH FOLLOWING LABEL AT THE SAME TIME.
REF NO.27A.
(2)LABEL IS NOT ILLUSTRATED.

(A)=SV100(US) (D)=
(B)=SV100(AS) (E)=
(C)=SV100(NZ) (F)=

No.	Lev.	Parts No.	Description	Q'ty (A)	(B)	(C)	(D)	(E)	(F)	I	R
1	1	172499-13300	BRACKET ASSY,R	1	1	1					
3	2	172499-13350	SEAL	1	1	1					
4	1	172499-13360	BRACKET ASSY,L	1	1	1					
5	2	172499-13350	SEAL	1	1	1					
7	1	172499-13400	BRACKET ASSY	2	2	2					
8	1	172499-13600	DUCT ASSY, RADIATOR	1	1	1					1
9	2	172164-13520	RUBBER, SEAL	2	2	2					
10	2	172446-13570	SEAL	1	1	1					
12	2	172499-13750	SEAL, DUCT	1	1	1					
13	2	172499-13760	SEAL, DUCT	1	1	1					
13A	2	172499-13770	SPONGE	1	1	1				W	
	(A=M/#00719)	(B=M/#00719)	(C=M/#00719)								
14	2	172165-66220	RUBBER, SEAL	1	1	1					
15	2	172164-66650	RUBBER, SEAL	2	2	2					
16	1	172499-13720	COVER ASSY, DUCT	1	1	1					
18	2	172478-13750	SPONGE	1	1	1					
19	1	172499-13800	LOUVER,WEIGHT (82)	1	1	1					
19-1	1	172499-13800-1	LOUVER ,WEIGHT (49)	1	1	1				S	
	(A=M/#00758)	(B=M/#00758)	(C=M/#00758)								
20	1	172168-46760	BOLT M10X20	4	4	4					
21	1	172168-46760	BOLT M10X20	3	3	3					
22	1	22217-100000	WASHER, SPRING 10	3	3	3					
23	1	26013-080202	BOLT, M8X 20	4	4	4					
23-1	1	172458-46720	BOLT 8X20	4	4	4				N	
	(A=M/#00565)	(B=M/#00565)	(C=M/#00565)								
24	1	26013-100202	BOLT, M10X 20	4	4	4					
25	1	26116-100752	BOLT, M10X 75 PLATED	3	3	3					
26	1	22137-100000	WASHER, 10	2	2	2				W	
	(A=M/#00742)	(B=M/#00742)	(C=M/#00742)								
27A	1	172437-03391	LABEL, RADIATOR US	1	1	1					2

N:Old $\xleftarrow[\text{No}]{\text{Yes}}$ New, Q:Old $\xleftarrow[\text{Yes}]{\text{No}}$ New, R:Old $\xleftarrow[\text{Yes}]{\text{Yes}}$ New, S:Old $\xleftarrow[\text{No}]{\text{No}}$ New, W:Add, Z:Discontinued, F:Interchangeable by set, K:Q'ty Change

Copyright (C) YANMAR CO., LTD. All RightsReserved.

Fig.9. FUEL TANK

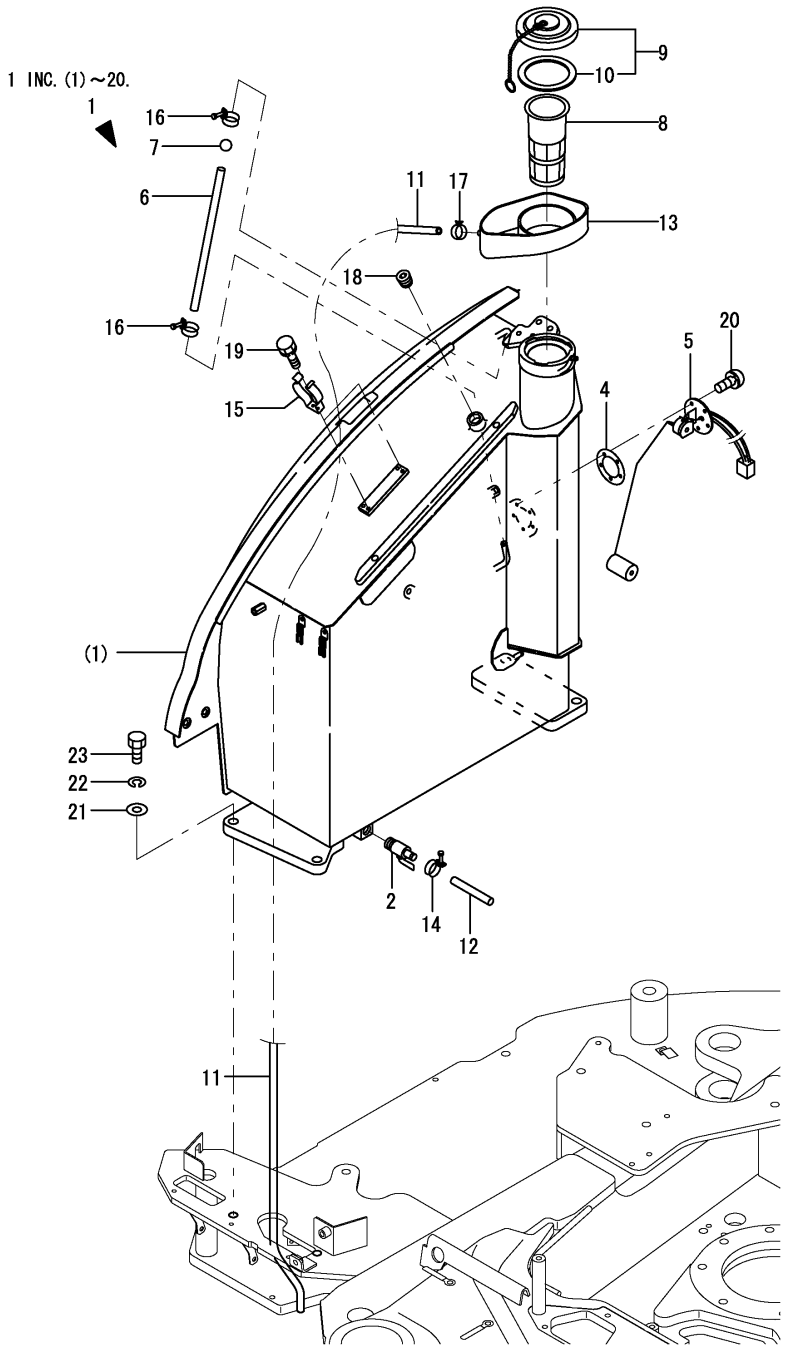

(A)=SV100(US) (D)=
(B)=SV100(AS) (E)=
(C)=SV100(NZ) (F)=

No.	Lev.	Parts No.	Description	Q'ty (A)	(B)	(C)	(D)	(E)	(F)	I	R
1	1	772499-14100	TANK ASSY, FUEL	1	1	1					
2	2	104200-11920	COCK, WATER	1	1	1					
4	2	172162-14200	GASKET	1	1	1					
5	2	172187-14221	GAUGE, FUEL	1	1	1					
6	2	172455-14240	HOSE, FUEL GAUGE	1	1	1					
7	2	172141-14260	FLOAT	1	1	1					
8	2	172187-14290	NET, FUEL	1	1	1					
9	2	172455-14340	CAP ASSY, TANK	1	1	1					
10	3	172187-14320	GASKET	1	1	1					
11	2	172455-14400	HOSE	1	1	1					
11-1	2	172A21-75110	HOSE	1	1	1				N	
	(A=M/#01522)	(B=M/#01522)	(C=M/#01522)								
12	2	172444-14410	HOSE, DRAIN	1	1	1					
13	2	172455-14500	RUBBER, FUEL CATCH	1	1	1					
14	2	106990-44660	CLIP, HOSE 12.5	1	1	1					
15	2	172122-55061	BRACKET, PUMP	2	2	2					
16	2	23010-014000	CLAMP, 14	2	2	2					
17	2	23080-013000	CLAMP, 13	1	1	1					
18	2	23871-040000	PLUG, R04	1	1	1					
19	2	26013-060102	BOLT, M6X 10	4	4	4					
20	2	26022-050122	SCREW, M5X12	5	5	5					
21	1	22137-160000	WASHER, 16	4	4	4					
22	1	22217-160000	WASHER, SPRING 16	4	4	4					
23	1	26116-160452	BOLT, M16X 45 PLATED	4	4	4					

N:Old $\frac{\text{Yes}}{\text{No}}$ New, Q:Old $\frac{\text{No}}{\text{Yes}}$ New, R:Old $\frac{\text{Yes}}{\text{Yes}}$ New, S:Old $\frac{\text{No}}{\text{No}}$ New, W:Add, Z:Discontinued, F:Interchangeable by set, K:Q'ty Change

Copyright (C) YANMAR CO., LTD. All RightsReserved.

Fig.10. FUEL LINE

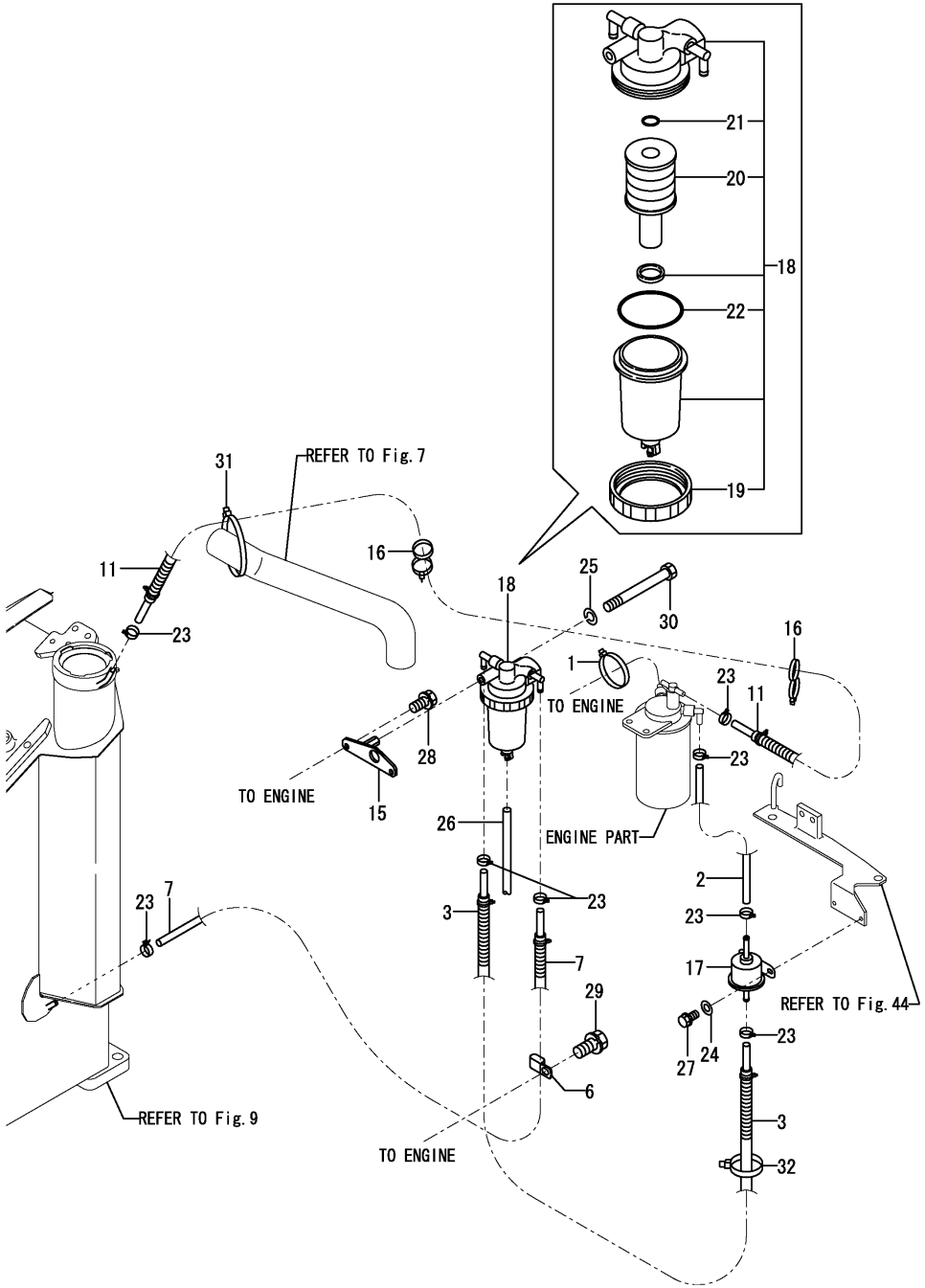

(A)=SV100(US) (D)=
(B)=SV100(AS) (E)=
(C)=SV100(NZ) (F)=

No.	Lev.	Parts No.	Description	Q'ty (A)	(B)	(C)	(D)	(E)	(F)	I	R
1	1	172126-11510	BAND 300	1	1	1					
2	1	172137-13400	PIPE, DRAIN	1	1	1					
3	1	172187-14430	HOSE	1	1	1					
6	1	172187-14460	CLAMP	1	1	1					
7	1	172A21-14470	HOSE ASSY	1	1	1					
11	1	172187-14470	HOSE ASSY	1	1	1					
15	1	172499-14610	BRACKET CMP	1	1	1					
16	1	172137-16560	BAND	2	2	2					
16-1	1	184016-55701	SEPARATOR ASSY,WATER	1	1	1				N	
	(A=MXXXXX)	(B=MXXXXX)	(C=MXXXXX)								
17	1	129612-52100	PUMP ASSY, FUEL FEED	1	1	1					
18	1	184016-55700	SEPARATOR ASSY,WATER	1	1	1					
18-1	1	184016-55701	SEPARATOR ASSY,WATER	1	1	1				N	
	(A=M10632)	(B=M10632)	(C=M10632)								
19	2	129100-55690	RING, RETAINING	1	1	1					
20	2	119802-55710	ELEMENT	1	1	1					
21	2	24311-000160	O-RING, 1AP16.0	1	1	1					
22	2	24321-000650	O-RING, 1AG65.0	1	1	1					
23	1	124766-59050	CLIP, HOSE 12	8	8	8					
24	1	22137-060000	WASHER, 6	2	2	2					
25	1	22217-080000	WASHER, SPRING 8	1	1	1					
26	1	23061-050500	PIPE, 5X 500	1	1	1					
27	1	26013-060162	BOLT, M6X 16	2	2	2					
28	1	26013-080162	BOLT, M8X 16	2	2	2					
29	1	26013-100162	BOLT, M10X 16	1	1	1					
30	1	26116-080702	BOLT, M8X 70 PLATED	1	1	1					
31	1	933152-09280	BAND 170	2	2	2					
32	1	933168-55770	BAND 146	5	5	5					

N:Old $\xleftarrow[\text{No}]{\text{Yes}}$ New, Q:Old $\xleftarrow[\text{Yes}]{\text{No}}$ New, R:Old $\xleftarrow[\text{Yes}]{\text{Yes}}$ New, S:Old $\xleftarrow[\text{No}]{\text{No}}$ New, W:Add, Z:Discontinued, F:Interchangeable by set, K:Q'ty Change

Copyright (C) YANMAR CO., LTD. All RightsReserved.

Fig.11. BATTERY

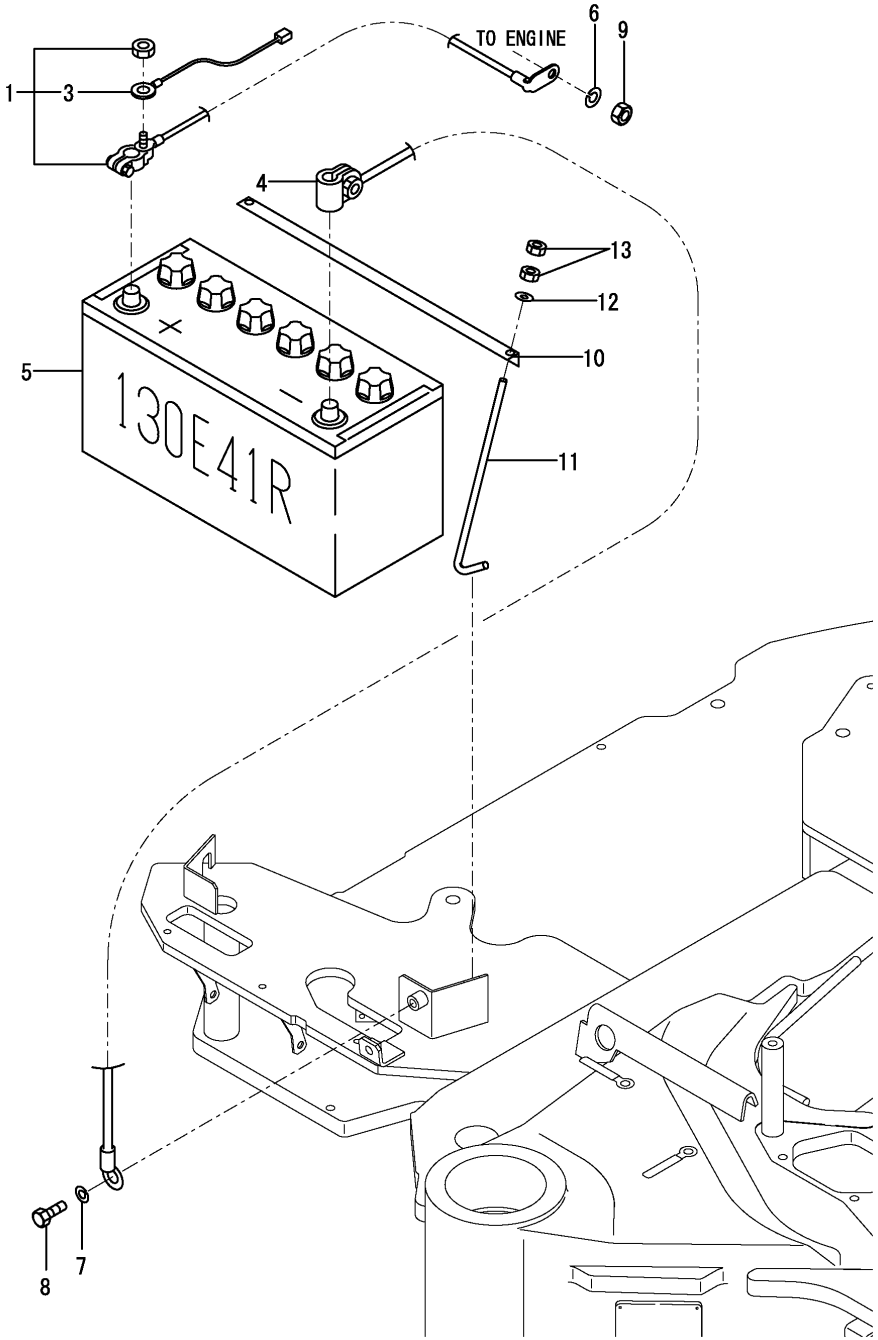

(A)=SV100(US) (D)=
(B)=SV100(AS) (E)=
(C)=SV100(NZ) (F)=

No.	Lev.	Parts No.	Description	Q'ty (A)	(B)	(C)	(D)	(E)	(F)	I	R
1	1	172499-16100	CORD ASSY, BATTERY	1	1	1					
3	2	172A21-16120	HARNESS, WIRE C	1	1	1					
4	1	172187-16110	CORD, BATTERY	1	1	1					
5	1	172187-16150	BATTERY	1	1	1					
6	1	22217-080000	WASHER, SPRING 8	1	1	1					
7	1	22217-100000	WASHER, SPRING 10	1	1	1					
8	1	26116-100162	BOLT, M10X 16 PLATED	1	1	1					
9	1	26716-080002	NUT, M8	1	1	1					
10	1	172112-16201	RETAINER, BATTERY	1	1	1					
11	1	172164-16370	ROD	2	2	2					
12	1	22157-080000	WASHER, 8	2	2	2					
13	1	26716-080002	NUT, M8	4	4	4					

N:Old $\overset{\text{Yes}}{\underset{\text{No}}{\leftrightarrow}}$ New, Q:Old $\overset{\text{No}}{\underset{\text{Yes}}{\leftrightarrow}}$ New, R:Old $\overset{\text{Yes}}{\underset{\text{Yes}}{\leftrightarrow}}$ New, S:Old $\overset{\text{No}}{\underset{\text{No}}{\leftrightarrow}}$ New, W:Add, Z:Discontinued, F:Interchangeable by set, K:Q'ty Change

Copyright (C) YANMAR CO., LTD. All RightsReserved.

Fig.12. ELECTRIC PART(WIRING)

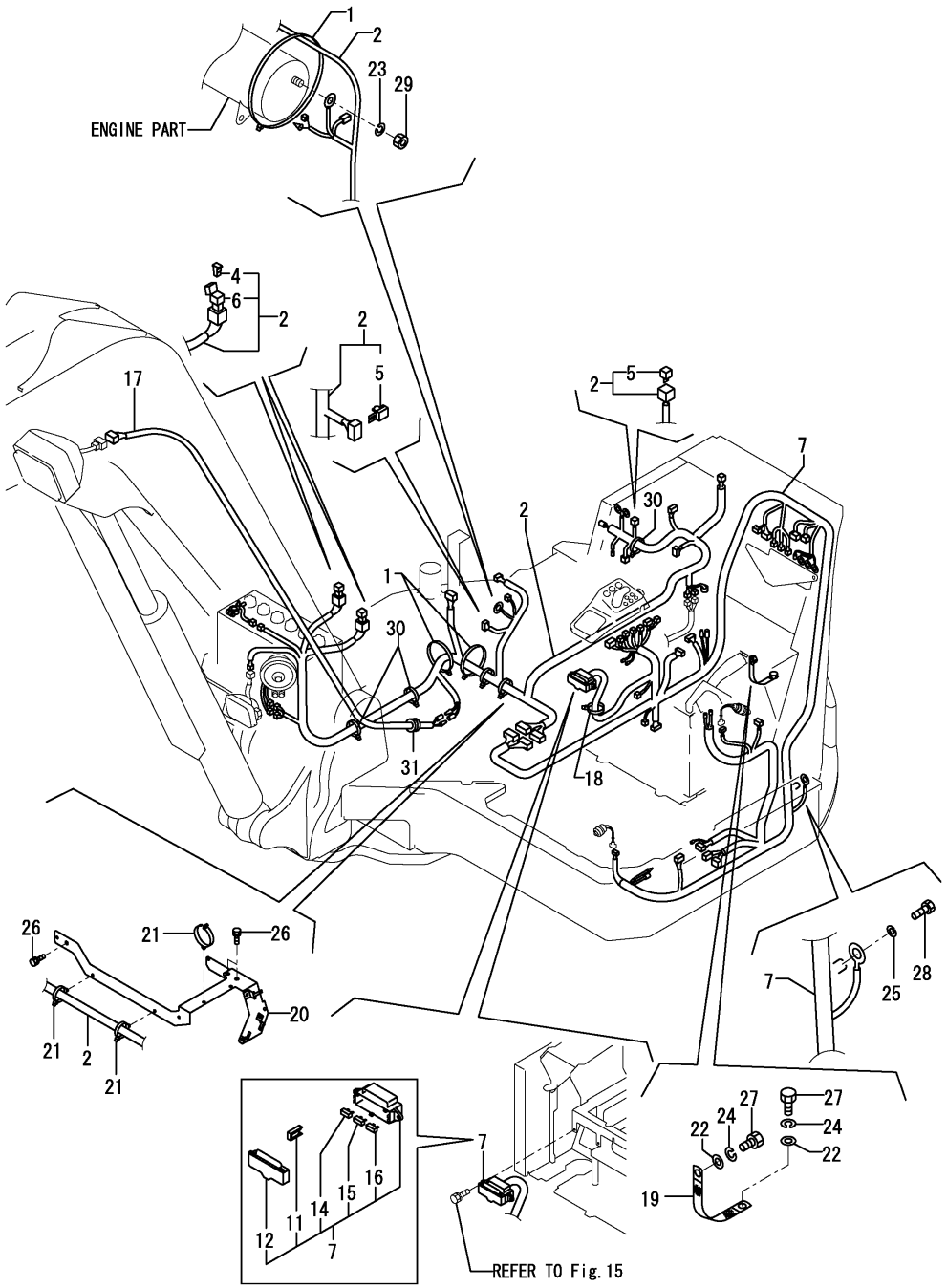

(A)=SV100(US) (D)=
(B)=SV100(AS) (E)=
(C)=SV100(NZ) (F)=

No.	Lev.	Parts No.	Description	Q'ty (A)	(B)	(C)	(D)	(E)	(F)	I	R
1	1	172126-11510	BAND 300	4	4	4					
2	1	172499-16500	HARNESS,A ASSY	1	1	1					
4	2	172458-16550	HUSE,SLOW BLOW (50A	2	2	2					
5	2	172648-16600	DIODE	2	2	2					
6	2	172447-17140	HOUSING	2	2	2					
7	1	172499-16520	HARNESS,B ASSY	1	1	1					
11	2	172175-17120	PULLER	1	1	1					
12	2	172187-17220	COVER	1	1	1					
14	2	29420-050000	FUSE, B 5A	6	6	6					
15	2	29420-150000	FUSE, B 15A	2	2	2					
16	2	29420-300000	FUSE, B 30A	2	2	2					
17	1	172187-16530	HARNESS D	1	1	1					
18	1	172183-16560	CLIP, HOSE	1	1	1					
19	1	172187-16600	CORD, ENGINE EARTH	1	1	1					
20	1	172A21-16701	SUPPORT ASSY	1	1	1					
21	1	194680-51670	BAND, CLIP	8	8	8					
22	1	22137-100000	WASHER, 10	2	2	2					
23	1	22217-060000	WASHER, SPRING 6	1	1	1					
24	1	22217-100000	WASHER, SPRING 10	2	2	2					
25	1	22217-100000	WASHER, SPRING 10	1	1	1					
26	1	26013-080162	BOLT, M8X 16	3	3	3					
27	1	26116-100162	BOLT, M10X 16 PLATED	2	2	2					
28	1	26116-100162	BOLT, M10X 16 PLATED	1	1	1					
29	1	26716-060002	NUT, M6	1	1	1					
30	1	933152-09280	BAND 170	4	4	4					
31	1	933171-15680	GROMMET	1	1	1					

N:Old $\frac{\text{Yes}}{\text{No}}$ New, Q:Old $\frac{\text{No}}{\text{Yes}}$ New, R:Old $\frac{\text{Yes}}{\text{Yes}}$ New, S:Old $\frac{\text{No}}{\text{No}}$ New, W:Add, Z:Discontinued, F:Interchangeable by set, K:Q'ty Change

Copyright (C) YANMAR CO., LTD. All RightsReserved.

Fig.13. ELECTRIC PART(WIRING : AIR CONDITIONER)

(A)=SV100(US)
(B)=SV100(AS)
(C)=SV100(NZ)
(D)=
(E)=
(F)=

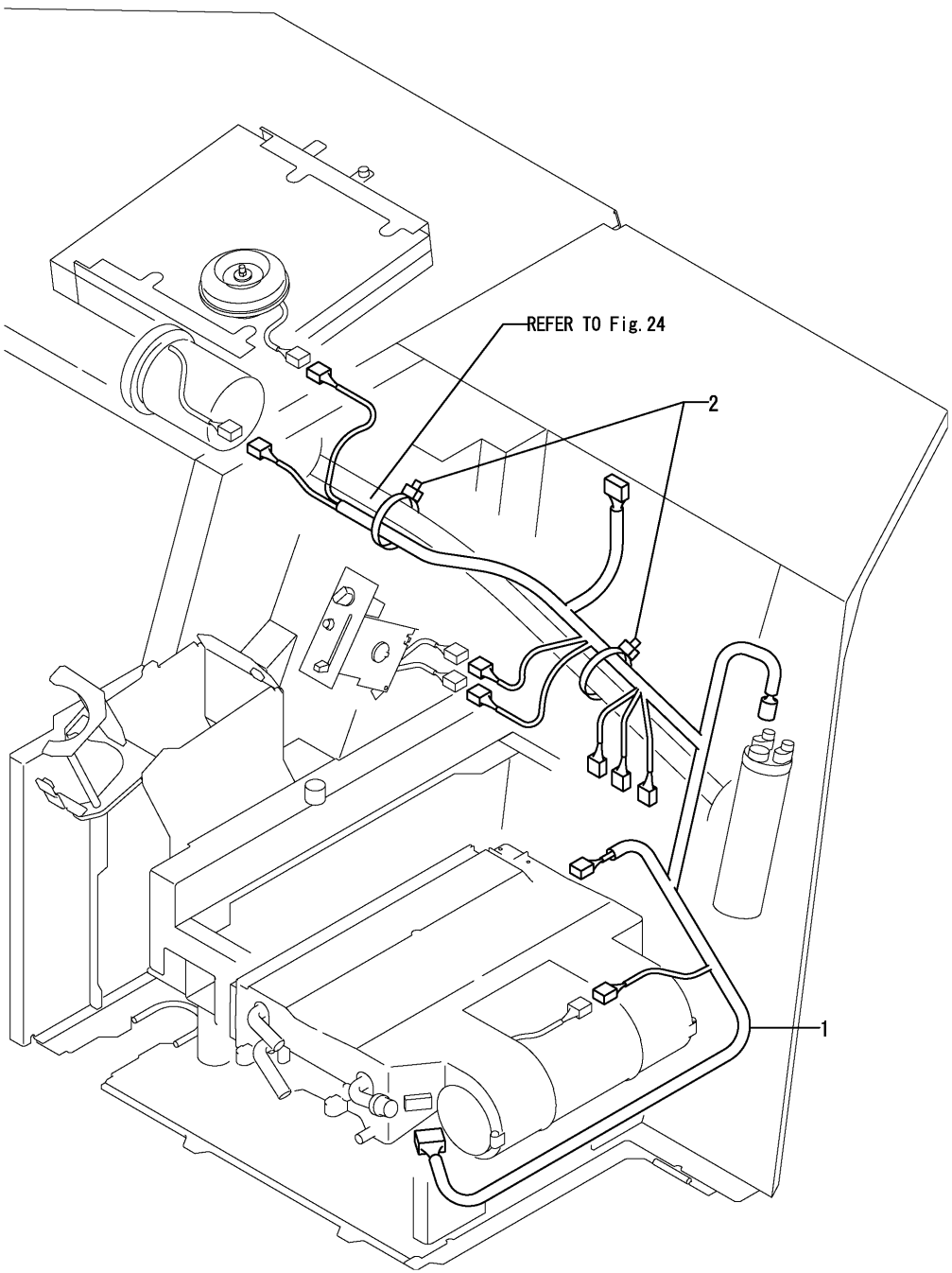

No.	Lev.	Parts No.	Description	Q'ty (A)	(B)	(C)	(D)	(E)	(F)	I	R
1	1	172455-16600	HARNESS, AIR CON.	1	1	1					
2	1	933152-09280	BAND 170	2	2	2					

N:Old ◄Yes/No► New, Q:Old ◄No/Yes► New, R:Old ◄Yes/Yes► New, S:Old ◄No/No► New, W:Add, Z:Discontinued, F:Interchangeable by set, K:Q'ty Change

Copyright (C) YANMAR CO., LTD. All RightsReserved.

Fig.14. ELECTRIC PART(WIRING : QUICK COUPLER)

(A)=SV100(US) (D)=
(B)=SV100(AS) (E)=
(C)=SV100(NZ) (F)=

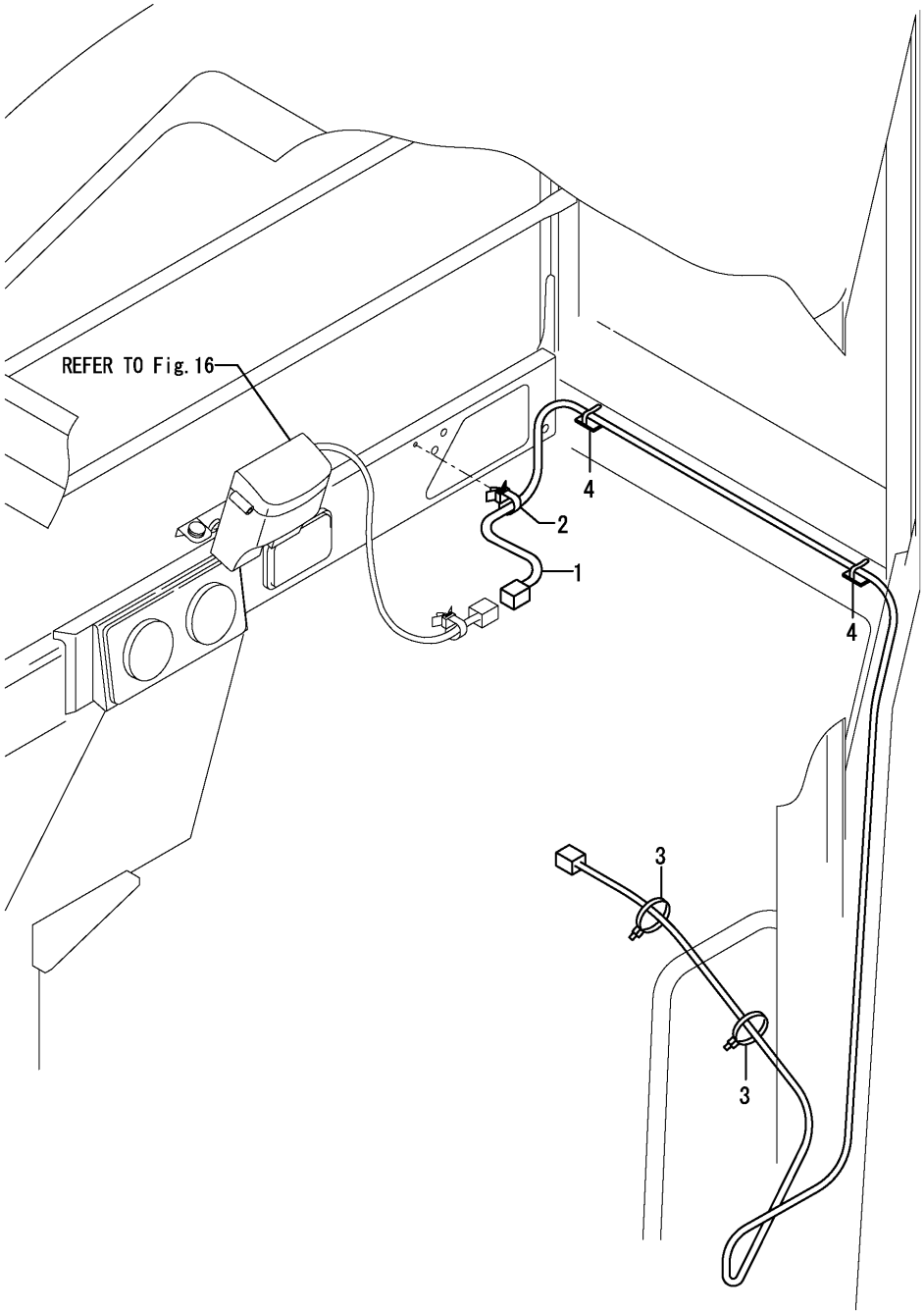

No.	Lev.	Parts No.	Description	Q'ty (A)	(B)	(C)	(D)	(E)	(F)	I	R
1	1	172978-16501	HARNESS, QUICK HITCH	1	1	1					
2	1	172458-17880	BAND	2	2	2					
3	1	933152-09280	BAND 170	2	2	2					
4	1	933169-15231	STEP	2	2	2					

N:Old $\xleftrightarrow[\text{No}]{\text{Yes}}$ New, Q:Old $\xleftrightarrow[\text{Yes}]{\text{No}}$ New, R:Old $\xleftrightarrow[\text{Yes}]{\text{Yes}}$ New, S:Old $\xleftrightarrow[\text{No}]{\text{No}}$ New, W:Add, Z:Discontinued, F:Interchangeable by set, K:Q'ty Change

Copyright (C) YANMAR CO., LTD. All RightsReserved.

Fig.15. ELECTRIC PART(EQUIPMENT)

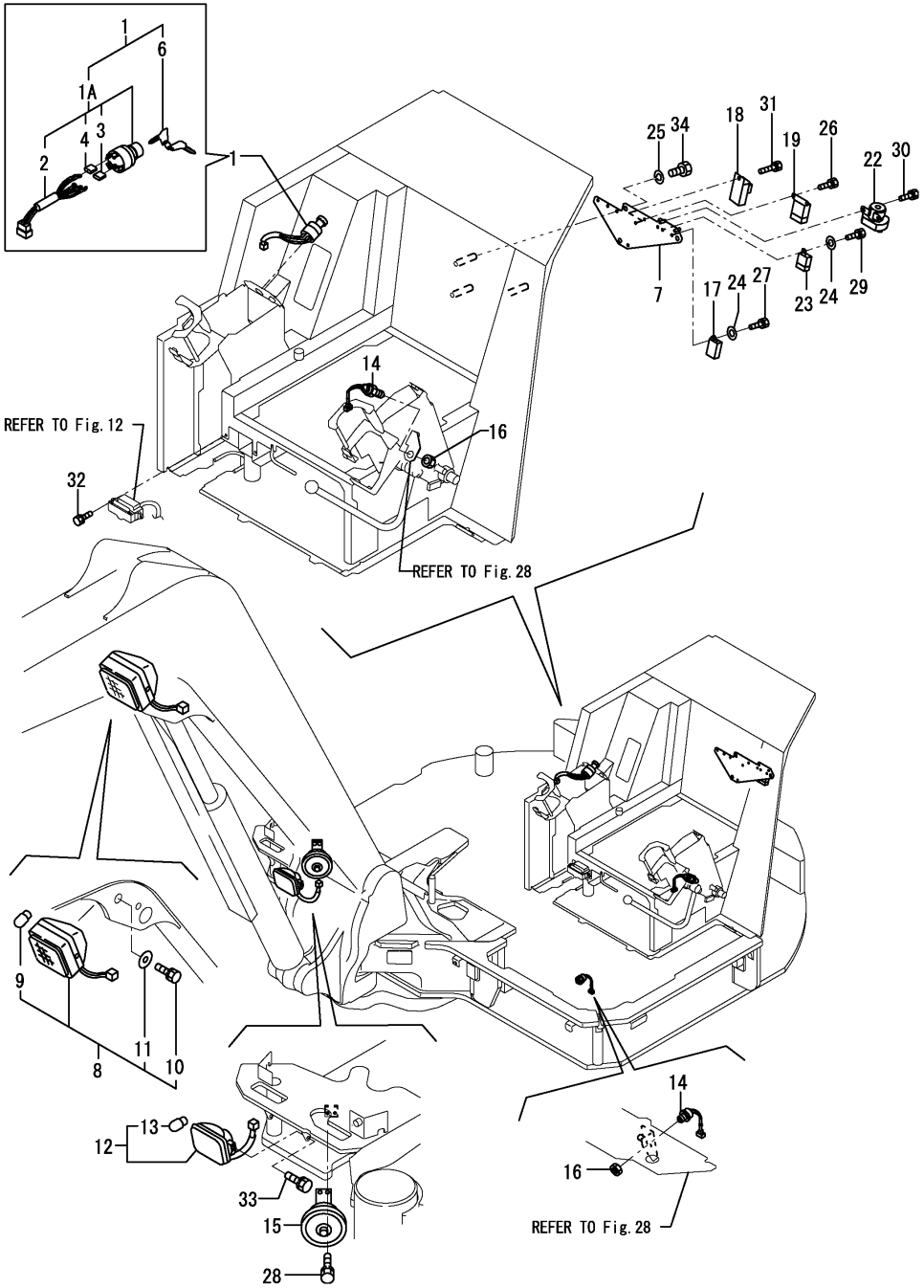

(A)=SV100(US) (D)=
(B)=SV100(AS) (E)=
(C)=SV100(NZ) (F)=

No.	Lev.	Parts No.	Description	Q'ty (A)	(B)	(C)	(D)	(E)	(F)	I	R
1	1	172187-17100	SWITCH ASSY, STARTER	1	1	1					
1A	2	172A47-17210	CYLINDER ASSY, KEY	1	1	1				W	
	(A=M/#XXXXX)	(B=M/#XXXXX)	(C=M/#XXXXX)								
2	3	172187-17070	CORD ASSY	1	1	1					
3	3	172187-17080	COVER	3	3	3					
4	3	172187-17090	COVER	2	2	2					
6	2	933110-00301	KEY ASSY	1	1	1					
7	1	172A21-17110	BRACKET ASSY	1	1	1					
7-1	1	172A21-17111	BRACKET ASSY	1	1	1				N	
	(A=M/#01719)	(B=M/#01719)	(C=M/#01719)								
8	1	172162-17400	LAMP COMP.,WORKING	1	1	1					
9	2	172141-17211	BULB	1	1	1					
10	2	26013-080202	BOLT, M8X 20	2	2	2					
11	2	22157-080000	WASHER, 8	2	2	2					
12	1	172162-17410	LAMP ASSY, HEADLIGHT	1	1	1					
13	2	29220-788200	BULB, 12V 25W	1	1	1					
14	1	194464-52190	SWITCH, SAFETY START	2	2	2					
15	1	194151-57100	HORN	1	1	1					
16	1	26776-180002	NUT, LOCK M18	2	2	2					
17	1	119247-77100	RELAY, SAFETY	1	1	1					
18	1	119802-77200	RELAY, SAFETY	1	1	1					
19	1	119650-77910	RELAY ASSY, GLOW	1	1	1					
22	1	124612-77910	SWITCH	1	1	1					
23	1	129211-77920	TIMER	1	1	1					
24	1	22137-060000	WASHER, 6	2	2	2					
25	1	22217-100000	WASHER, SPRING 10	3	3	3					
26	1	26013-060122	BOLT, M6X 12	2	2	2					
27	1	26013-060122	BOLT, M6X 12	1	1	1					
28	1	26013-060162	BOLT, M6X 16	2	2	2					
29	1	26013-060162	BOLT, M6X 16	1	1	1					
30	1	26013-060162	BOLT, M6X 16	2	2	2					
31	1	26013-060202	BOLT, M6X 20	1	1	1					
32	1	26013-060202	BOLT, M6X 20	2	2	2					
33	1	26013-080162	BOLT, M8X 16	2	2	2					
34	1	26116-100162	BOLT, M10X 16 PLATED	3	3	3					

N:Old $\frac{\text{Yes}}{\text{No}}$ New, Q:Old $\frac{\text{No}}{\text{Yes}}$ New, R:Old $\frac{\text{Yes}}{\text{Yes}}$ New, S:Old $\frac{\text{No}}{\text{No}}$ New, W:Add, Z:Discontinued, F:Interchangeable by set, K:Q'ty Change

Copyright (C) YANMAR CO., LTD. All RightsReserved.

Fig.16. ELECTRIC PART(SWITCH BOX : QUICK COUPLER)

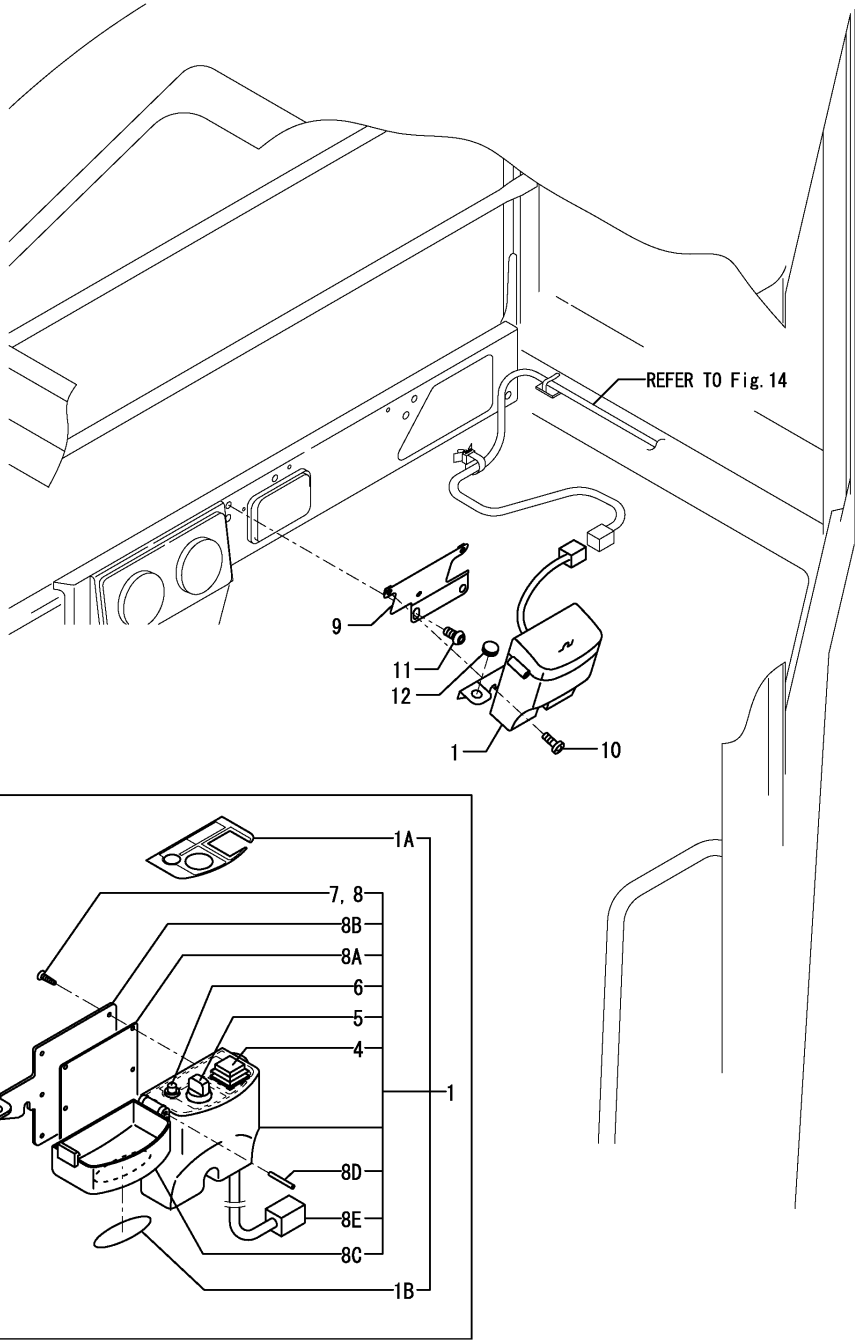

(A)=SV100(US) (D)=
(B)=SV100(AS) (E)=
(C)=SV100(NZ) (F)=

No.	Lev.	Parts No.	Description	Q'ty (A)	(B)	(C)	(D)	(E)	(F)	I	R
1	1	172958-17101	BOX, SWITCH	1	1	1					
1-1	1	172958-17110	SWITCH BOX(EX	1	1	1				N	
	(A=M/#01600)	(B=M/#01600)	(C=M/#01600)								
1A	2	172472-03290	LABEL,SWITCH	1	1	1					
1B	2	172472-03300	LABEL,COVER	1	1	1					
4	3	172958-17140	SWITCH ASSY	1	1	1					
5	3	172958-17150	SWITCH ASSY	1	1	1					
6	3	172958-17160	INDICATER LAMP(CP	1	1	1					
7	3	172958-17170	SCREW, TAPPING	1	1	1					
7-1	3	172958-17170	SCREW, TAPPING	6	6	6				K	
	(A=M/#00617)	(B=M/#00617)	(C=M/#00617)								
8	3	172958-17180	SCREW, TAPPING	1	1	1					
8-1	3	172958-17180	SCREW, TAPPING	2	2	2				K	
	(A=M/#00617)	(B=M/#00617)	(C=M/#00617)								
8A	3	172958-17190	PACKING	1	1	1					
8B	3	172958-17200	BRACKET	1	1	1					
8C	3	172958-17210	CASE	1	1	1					
8D	3	22351-030028	PIN, SPRING 3.0X28	1	1	1					
8E	3	172958-17220	CORD	1	1	1				W	
	(A=M/#00742)	(B=M/#00742)	(C=M/#00742)								
9	1	172978-17100	STAY ASSY, SWITCH	1	1	1					
10	1	172137-46210	SCREW	3	3	3					
11	1	172455-61710	BOLT M 8X 16	2	2	2					
12	1	172187-64900	PLUG	1	1	1					

N:Old $\xleftrightarrow[\text{No}]{\text{Yes}}$ New, Q:Old $\xleftrightarrow[\text{Yes}]{\text{No}}$ New, R:Old $\xleftrightarrow[\text{Yes}]{\text{Yes}}$ New, S:Old $\xleftrightarrow[\text{No}]{\text{No}}$ New, W:Add, Z:Discontinued, F:Interchangeable by set, K:Q'ty Change

Copyright (C) YANMAR CO., LTD. All RightsReserved.

Fig.17. INDICATOR BOX

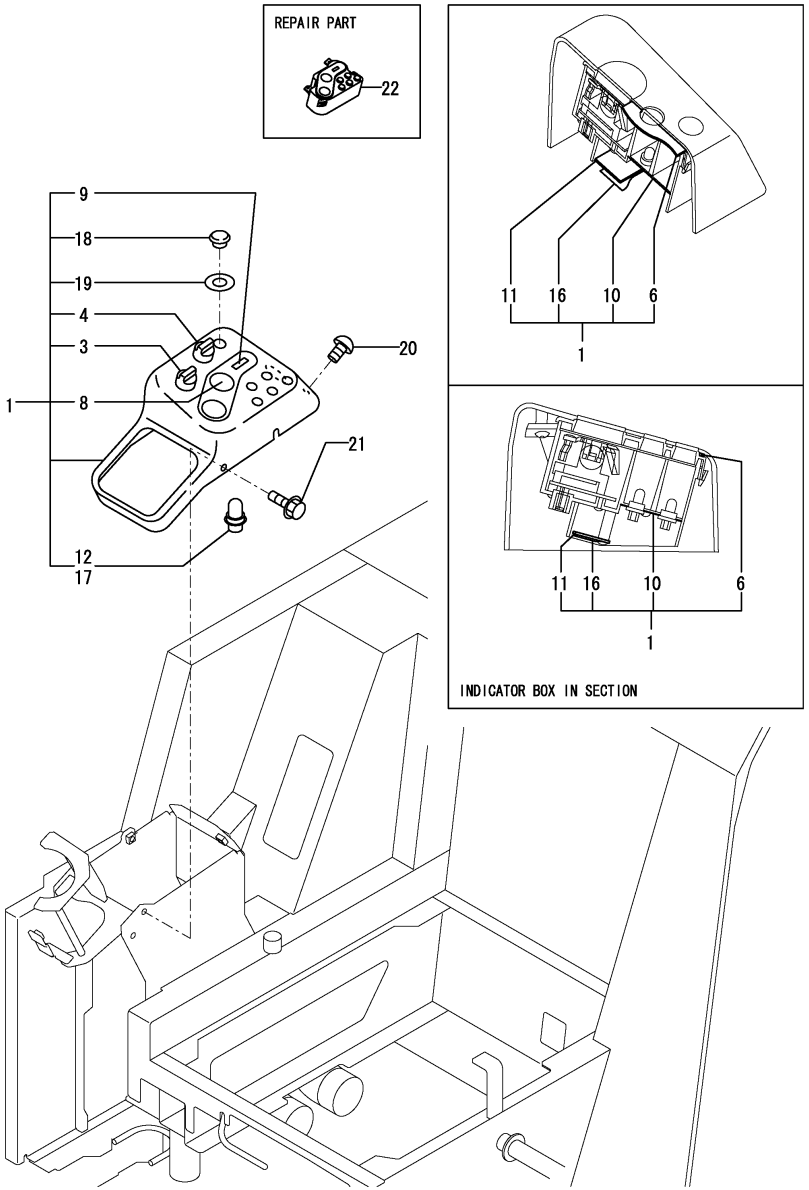

(A)=SV100(US) (D)=
(B)=SV100(AS) (E)=
(C)=SV100(NZ) (F)=

No.	Lev.	Parts No.	Description	Q'ty (A)	(B)	(C)	(D)	(E)	(F)	I	R
1	1	172478-17351	INDICATOR BOX(A/C	1	1	1					1
3	2	172187-17280	SWITCH ASSY, LIGHT	1	1	1					
4	2	172472-17300	SWITCH ASSY, WASHER	1	1	1					
6	2	172187-17320	PACKING	1	1	1					
8	2	172187-17341	GAUGE ASSY	1	1	1					
9	2	172187-17350	METER ASSY, HOUR	1	1	1					
10	2	172187-17360	PRINT,CIRCUIT	1	1	1					
11	2	172187-17371	CIRCUIT ASSY	1	1	1					
12	2	172187-17380	BULB	4	4	4					
16	2	172187-17470	PLATE	1	1	1					
17	2	172187-17480	BULB	2	2	2					
18	2	172187-17560	CAP	1	1	1					
19	2	172187-17570	GASKET	1	1	1					
20	1	172458-46720	BOLT 8X20	2	2	2					
20-1	1	172519-63240	BOLT	2	2	2				N	
	(A=M/#01663)	(B=M/#01663)	(C=M/#01663)								
21	1	172519-63240	BOLT	2	2	2					
22	1	172A77-17500	MONITOR ASSY	1	1	1				W	2
	(A=MZZZZZ)	(B=MZZZZZ)	(C=MZZZZZ)								

Remarks
(1)HOUR METER = ANALOG TYPE.
ONLY THE MONITOR PORT COPES IN
REF.NO.22.
(2)HOUR METER = L.C.D. TYPE.

N:Old $\frac{\text{Yes}}{\text{No}}$ New, Q:Old $\frac{\text{No}}{\text{Yes}}$ New, R:Old $\frac{\text{Yes}}{\text{Yes}}$ New, S:Old $\frac{\text{No}}{\text{No}}$ New, W:Add, Z:Discontinued, F:Interchangeable by set, K:Q'ty Change

Copyright (C) YANMAR CO., LTD. All RightsReserved.

Fig.18. TRAVEL ALARM

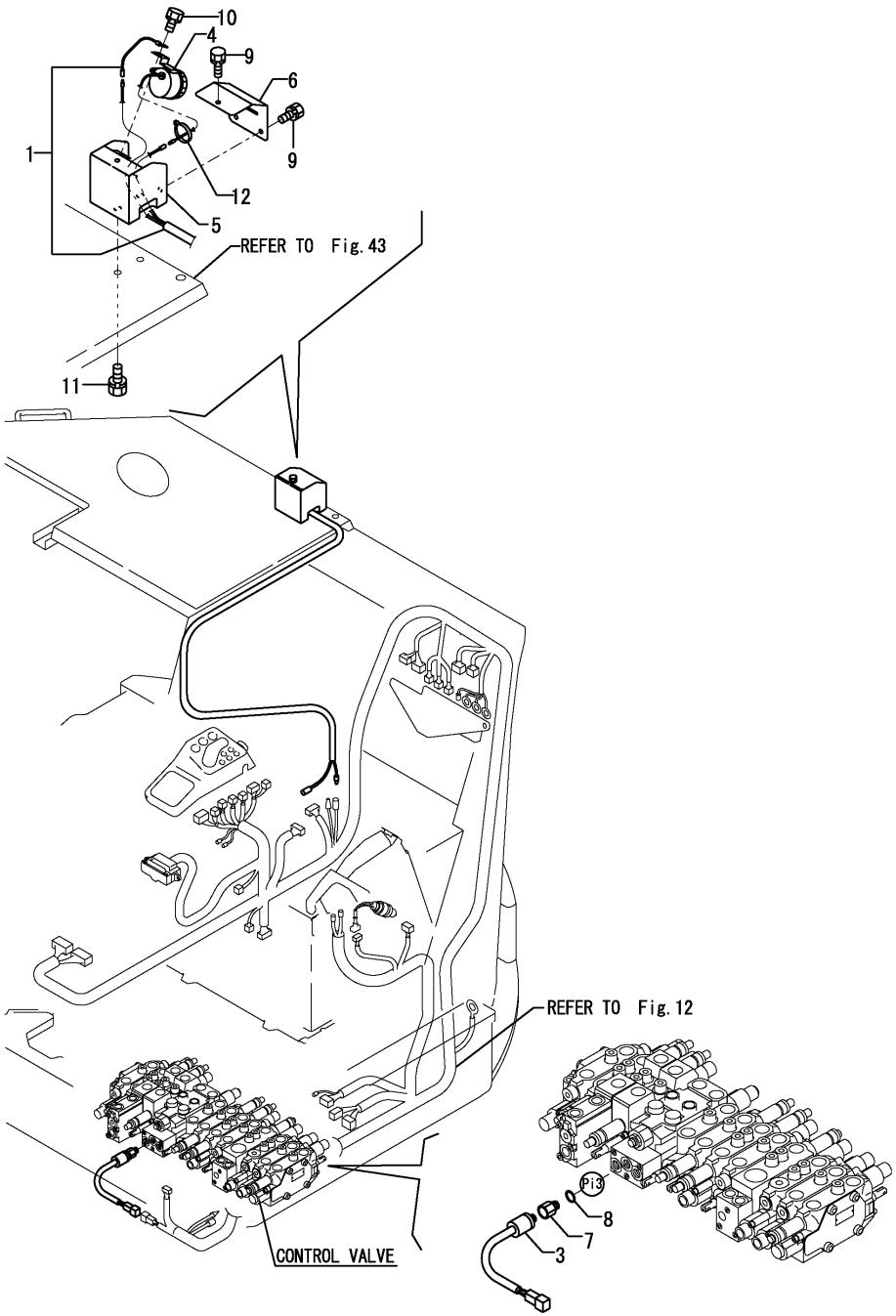

(A)=SV100(US) (D)=
(B)=SV100(AS) (E)=
(C)=SV100(NZ) (F)=

No.	Lev.	Parts No.	Description	Q'ty (A)	(B)	(C)	(D)	(E)	(F)	I	R
1	1	172478-16570	HANESS D	1	1	1					
3	1	172478-17200	SWITCH, PRESSURE	1	1	1					
3-1	1	172478-17201	SWITCH, PRESSURE	1	1	1				R	
	(A=M/#01726)	(B=M/#01726)	(C=M/#01726)								
4	1	172511-17351	BUZZER, BACK	1	1	1					
5	1	172472-17400	CASE ASSY, ALARM	1	1	1					
5-1	1	172472-17400-1	CASE ASSY, ALARM	1	1	1				S	
	(A=M/#01231)	(B=M/#01231)	(C=M/#01231)								
5-2	1	172472-17401-1	CASE ASSY, ALARM	1	1	1				N	
	(A=M/#01663)	(B=M/#01663)	(C=M/#01663)								
6	1	172472-17470	COVER, ALARM CASE	1	1	1					
6-1	1	172472-17470-1	COVER, ALARM CASE	1	1	1				S	
	(A=M/#01231)	(B=M/#01231)	(C=M/#01231)								
7	1	172156-76110	CONNECTOR,PF1/4PT1/8	1	1	1					
7-1	1	172499-76230	JOINT, G1/4RC1/8	1	1	1				N	
	(A=M/#00853)	(B=M/#00853)	(C=M/#00853)								
8	1	24315-000110	O-RING, 1BP11.0	1	1	1					
8-1	1	41851-000110	O-RING	1	1	1				N	
	(A=M/#01600)	(B=M/#01600)	(C=M/#01600)								
9	1	26013-060122	BOLT, M6X 12	3	3	3					
10	1	26013-080122	BOLT, M8X 12	1	1	1					
11	1	26013-100162	BOLT, M10X 16	2	2	2					
12	1	933168-55770	BAND 146	1	1	1					

N:Old $\frac{\text{Yes}}{\text{No}}$ New, Q:Old $\frac{\text{No}}{\text{Yes}}$ New, R:Old $\frac{\text{Yes}}{\text{Yes}}$ New, S:Old $\frac{\text{No}}{\text{No}}$ New, W:Add, Z:Discontinued, F:Interchangeable by set, K:Q'ty Change

Copyright (C) YANMAR CO., LTD. All RightsReserved.

Fig.19. WIND WASHER

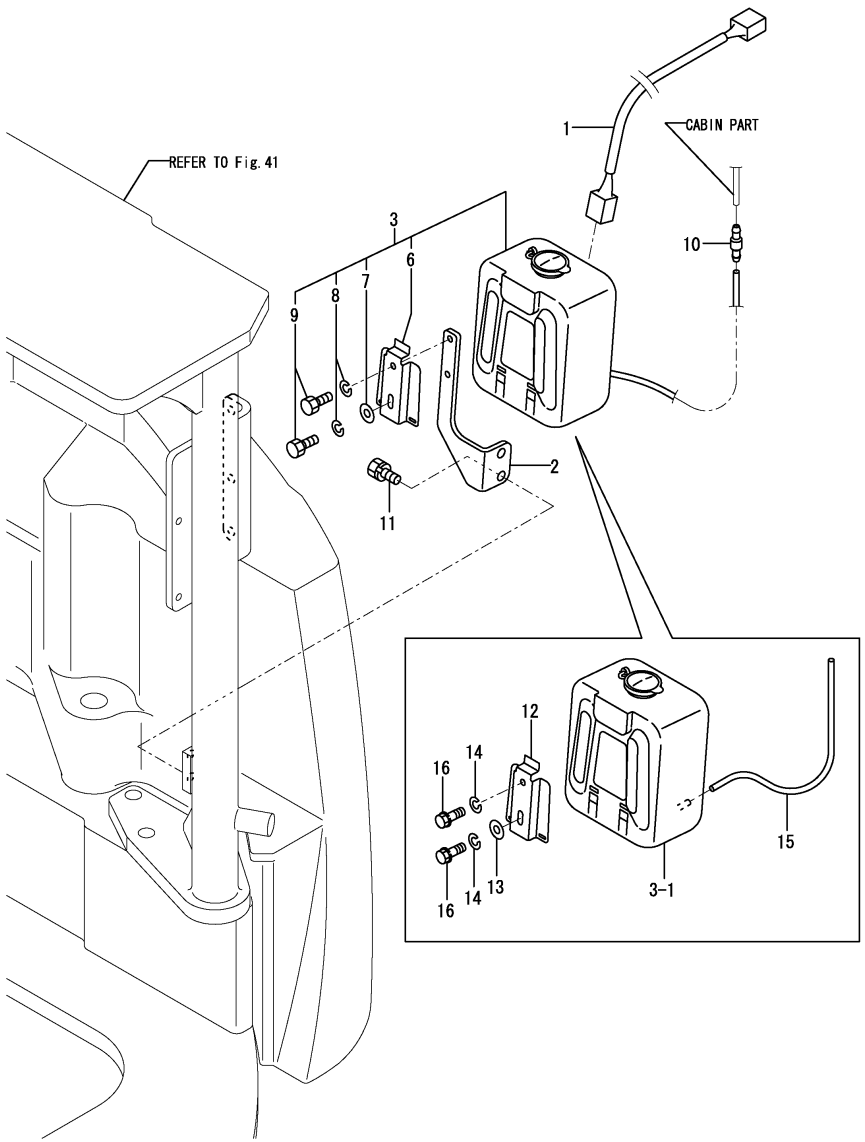

Remarks
(1)Interchangeable by simultaneous replacement with Ref.No.12,13,14, 15,16.

(A)=SV100(US) (D)=
(B)=SV100(AS) (E)=
(C)=SV100(NZ) (F)=

No.	Lev.	Parts No.	Description	Q'ty (A)	(B)	(C)	(D)	(E)	(F)	I	R
1	1	172478-16610	HARNESS, WIRE	1	1	1					
2	1	172478-17601	BRACKET, WASHER	1	1	1					
3	1	172472-17610	TANK ASSY, WASHER	1	1	1					
3-1	1	172472-17611	TANK ASSY, WASHER	1	1	1				F	1
	(A=MXXXXX)	(B=MXXXXX)	(C=MXXXXX)								
6	2	172472-17650	BRACKET	1	1	1				Z	
	(A=MXXXXX)	(B=MXXXXX)	(C=MXXXXX)								
7	2	22137-060000	WASHER, 6	1	1	1				Z	
	(A=MXXXXX)	(B=MXXXXX)	(C=MXXXXX)								
8	2	22217-060000	WASHER, SPRING 6	2	2	2				Z	
	(A=MXXXXX)	(B=MXXXXX)	(C=MXXXXX)								
9	2	26116-060162	BOLT, M6X 16 PLATED	2	2	2				Z	
	(A=MXXXXX)	(B=MXXXXX)	(C=MXXXXX)								
10	1	198127-86540	JOINT, PIPE	1	1	1					
11	1	26013-100162	BOLT, M10X 16	2	2	2					
12	1	120147-44810	BRACKET	1	1	1				W	
	(A=MXXXXX)	(B=MXXXXX)	(C=MXXXXX)								
13	1	22137-060000	WASHER, 6	1	1	1				W	
	(A=MXXXXX)	(B=MXXXXX)	(C=MXXXXX)								
14	1	22217-060000	WASHER, SPRING 6	2	2	2				W	
	(A=MXXXXX)	(B=MXXXXX)	(C=MXXXXX)								
15	1	23061-043000	PIPE, 4X3000	1	1	1				W	
	(A=MXXXXX)	(B=MXXXXX)	(C=MXXXXX)								
16	1	26116-060162	BOLT, M6X 16 PLATED	2	2	2				W	
	(A=MXXXXX)	(B=MXXXXX)	(C=MXXXXX)								

N:Old $\overset{\text{Yes}}{\underset{\text{No}}{\leftrightarrow}}$ New, Q:Old $\overset{\text{No}}{\underset{\text{Yes}}{\leftrightarrow}}$ New, R:Old $\overset{\text{Yes}}{\underset{\text{Yes}}{\leftrightarrow}}$ New, S:Old $\overset{\text{No}}{\underset{\text{No}}{\leftrightarrow}}$ New, W:Add, Z:Discontinued, F:Interchangeable by set, K:Q'ty Change

Copyright (C) YANMAR CO., LTD. All RightsReserved.

Fig.20. HEATER

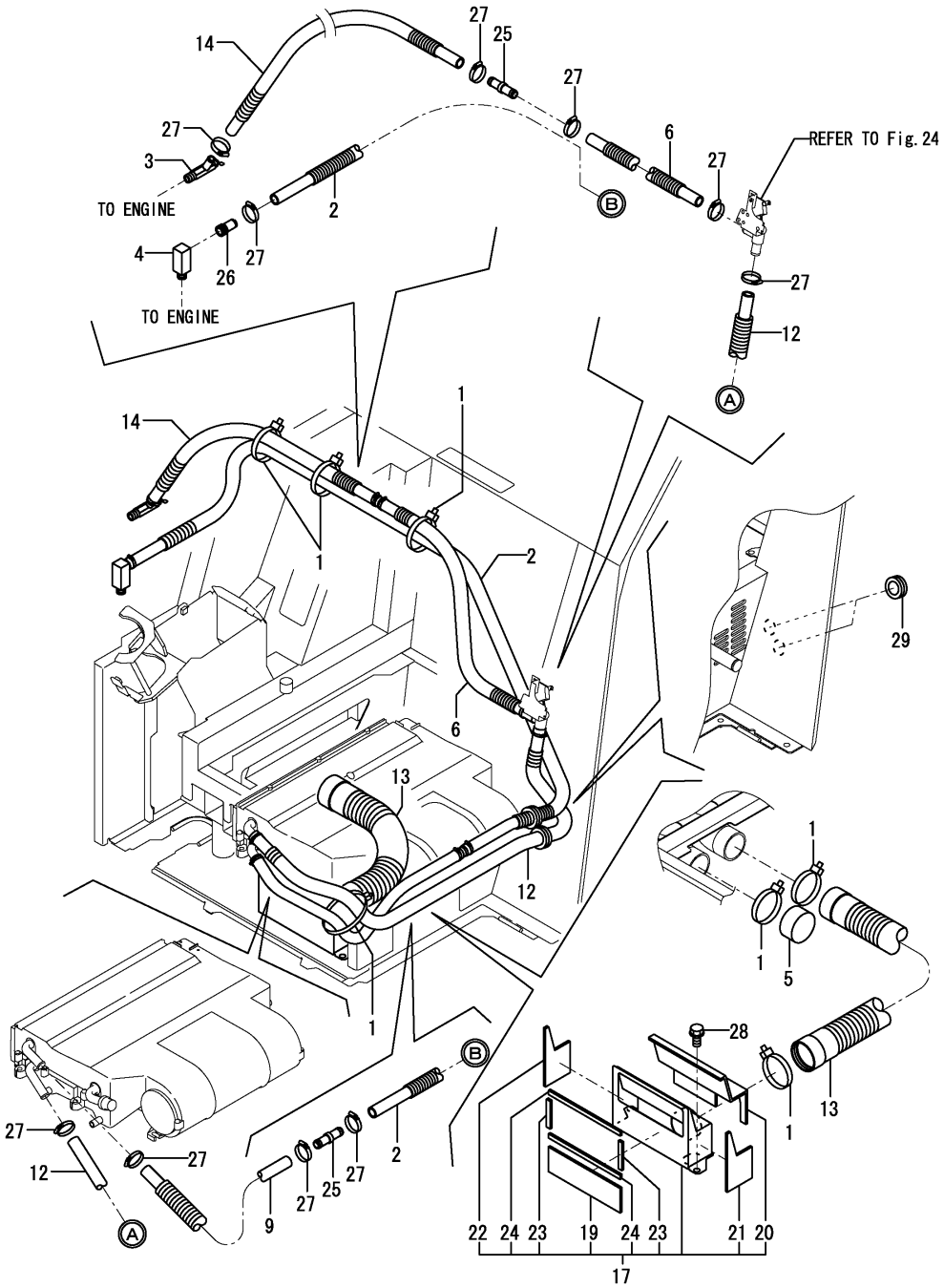

(A)=SV100(US) (D)=
(B)=SV100(AS) (E)=
(C)=SV100(NZ) (F)=

No.	Lev.	Parts No.	Description	Q'ty (A)	(B)	(C)	(D)	(E)	(F)	I	R
1	1	172126-11510	BAND 300	7	7	7					
2	1	172499-17600	HOSE ASSY, HEATER	1	1	1					
3	1	172425-17630	VALVE ASSY, HEATER	1	1	1					
4	1	172499-17650	ELBOW	1	1	1					
5	1	172122-17730	COVER, DEFROSTER	1	1	1					
6	1	172455-17780	HOSE ASSY, HEATER	1	1	1					
9	1	172455-17790	HOSE ASSY, HEATER	1	1	1					
12	1	172499-17800	HOSE ASSY, HEATER	1	1	1					
13	1	172499-17850	HOSE ASSY	1	1	1					
14	1	172455-17860	HOSE ASSY, HEATER	1	1	1					
17	1	172499-17900	DUCT ASSY	1	1	1					
19	2	172499-17950	SHEET, INSULATOR	1	1	1					
20	2	172499-17960	SHEET, INSULATOR	1	1	1					
21	2	172499-17970	SHEET, INSULATOR	1	1	1					
22	2	172499-17980	SHEET, INSULATOR	1	1	1					
23	2	172455-64110	SEAL, HEATER	2	2	2					
24	2	172455-64130	SEAL, HEATER	2	2	2					
25	1	172455-17930	JOINT, HOSE	2	2	2					
26	1	129122-44480	JOINT	1	1	1					
27	1	23001-022000	CLAMP, HOSE 22	10	10	10					
28	1	26013-100202	BOLT, M10X 20	2	2	2					
29	1	933171-15680	GROMMET	2	2	2					

N:Old $\xleftarrow[\text{No}]{\text{Yes}}$ New, Q:Old $\xleftarrow[\text{Yes}]{\text{No}}$ New, R:Old $\xleftarrow[\text{Yes}]{\text{Yes}}$ New, S:Old $\xleftarrow[\text{No}]{\text{No}}$ New, W:Add, Z:Discontinued, F:Interchangeable by set, K:Q'ty Change

Copyright (C) YANMAR CO., LTD. All RightsReserved.

Fig.21. AIR CONDITIONER(ENGINE RELATED)

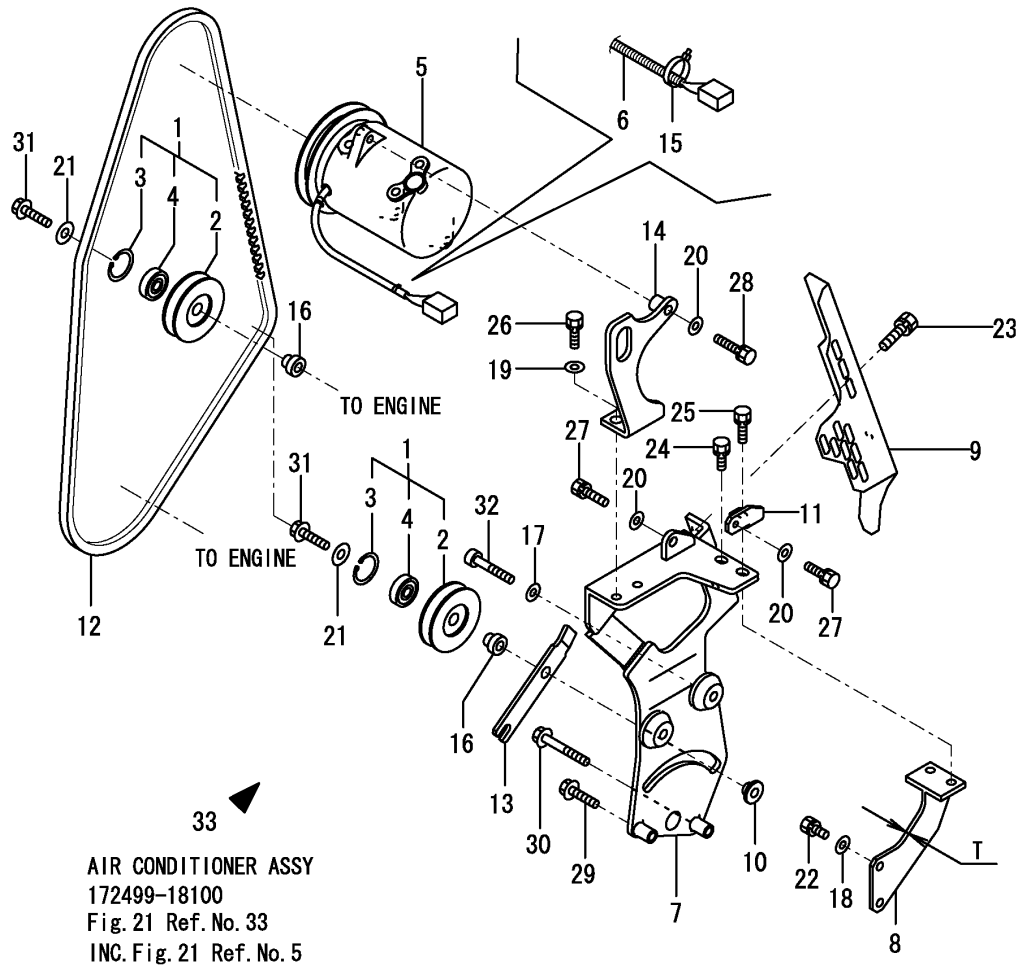

AIR CONDITIONER ASSY
172499-18100
Fig. 21 Ref. No. 33
INC. Fig. 21 Ref. No. 5
Fig. 22 Ref. No. 2～6
Fig. 23 Ref. No. 4～6
Fig. 24 Ref. No. 1～9.

(A)=SV100(US) (D)=
(B)=SV100(AS) (E)=
(C)=SV100(NZ) (F)=

No.	Lev.	Parts No.	Description	Q'ty (A)	(B)	(C)	(D)	(E)	(F)	I	R
1	1	172187-11100	PULLEY ASSY, TENSION	2	2	2					
2	2	172187-11121	PULLEY, TENSION	2	2	2					
3	2	22252-000350	RING, 35	2	2	2					
4	2	24104-062020	BEARING, 6202UUC3	2	2	2					
5	1	172445-18201	COMPRESSOR	1	1	1					
6	1	172478-18210	TUBE, CORRUGATED	1	1	1					
7	1	172187-18301	BRACKET ASSY, A	1	1	1					
7-1	1	172A21-18350	BRACKET A ASSY,ID	1	1	1				N	
	(A=M/#01663)	(B=M/#01663)	(C=M/#01663)								
8	1	172187-18340	BRACKET (B)	1	1	1					
8-1	1	172187-18341	BRACKET ASSY, B	1	1	1				F	2
	(A=M/#01571)	(B=M/#01571)	(C=M/#01571)								
8-2	1	172187-18342	BRACKET ASSY, B	1	1	1				N	
	(A=M/#01663)	(B=M/#01663)	(C=M/#01663)								
9	1	172187-18402	GUARD ASSY, BELT	1	1	1					
10	1	172187-18410	NUT, PULLEY	1	1	1					
11	1	172187-18420	BRACKET	1	1	1					
12	1	172187-18451	V-BELT	1	1	1					
13	1	172187-18500	BAR, ADJUST	1	1	1					
14	1	172455-18560	BRACKET, COMP.	1	1	1					
15	1	1A1380-55310	CLAMP, WIRE	2	2	2					
16	1	129466-96240	SPACER	2	2	2					
17	1	22137-080000	WASHER, 8	2	2	2					
18	1	22137-080000	WASHER, 8	2	2	2					
19	1	22137-080000	WASHER, 8	2	2	2					
20	1	22137-080000	WASHER, 8	3	3	3					
21	1	22137-100000	WASHER, 10	2	2	2					
22	1	26013-080162	BOLT, M8X 16	2	2	2					
22-1	1	26013-080202	BOLT, M8X 20	2	2	2				S	
	(A=M/#01571)	(B=M/#01571)	(C=M/#01571)								
23	1	26013-080162	BOLT, M8X 16	2	2	2					
24	1	26013-080162	BOLT, M8X 16	1	1	1					
25	1	26013-080252	BOLT, M8X 25	1	1	1					
26	1	26013-080252	BOLT, M8X 25	2	2	2					
27	1	26013-080252	BOLT, M8X 25	2	2	2					
28	1	26013-080352	BOLT, M8X 35	1	1	1					
29	1	26106-080352	BOLT, M8X 35 PLATED	1	1	1				Z	
	(A=M/#01663)	(B=M/#01663)	(C=M/#01663)								
30	1	26106-080602	BOLT, M8X 60 PLATED	1	1	1					
31	1	26106-100352	BOLT, M10X 35 PLATED	2	2	2					
32	1	26450-080502	BOLT, M8X 50	2	2	2					
33	1	172499-18100	CONDITIONER ASSY,AIR	1	1	1					1

Remarks
(1)NOT ILLUSTRATED.
INC FIG.22 REF.NO.5
FIG.23 REF.NO.2 - 6
FIG.24 REF.NO.4 - 6
FIG.25 REF.NO.1 - 9
(2)INTERCHANGEABLE BY SIMULTANEOUS
REPLACEMENT WITH REF.NO.22-1.
REF.NO.8 T=6MM,NO.8-1 & 8-2 T=9MM.

N:Old ◄Yes/No► New, Q:Old ◄No/Yes► New, R:Old ◄Yes/Yes► New, S:Old ◄No/No► New, W:Add, Z:Discontinued, F:Interchangeable by set, K:Q'ty Change

Copyright (C) YANMAR CO., LTD. All RightsReserved.

Fig.22. AIR CONDITIONER(CONDENSER RELATED)

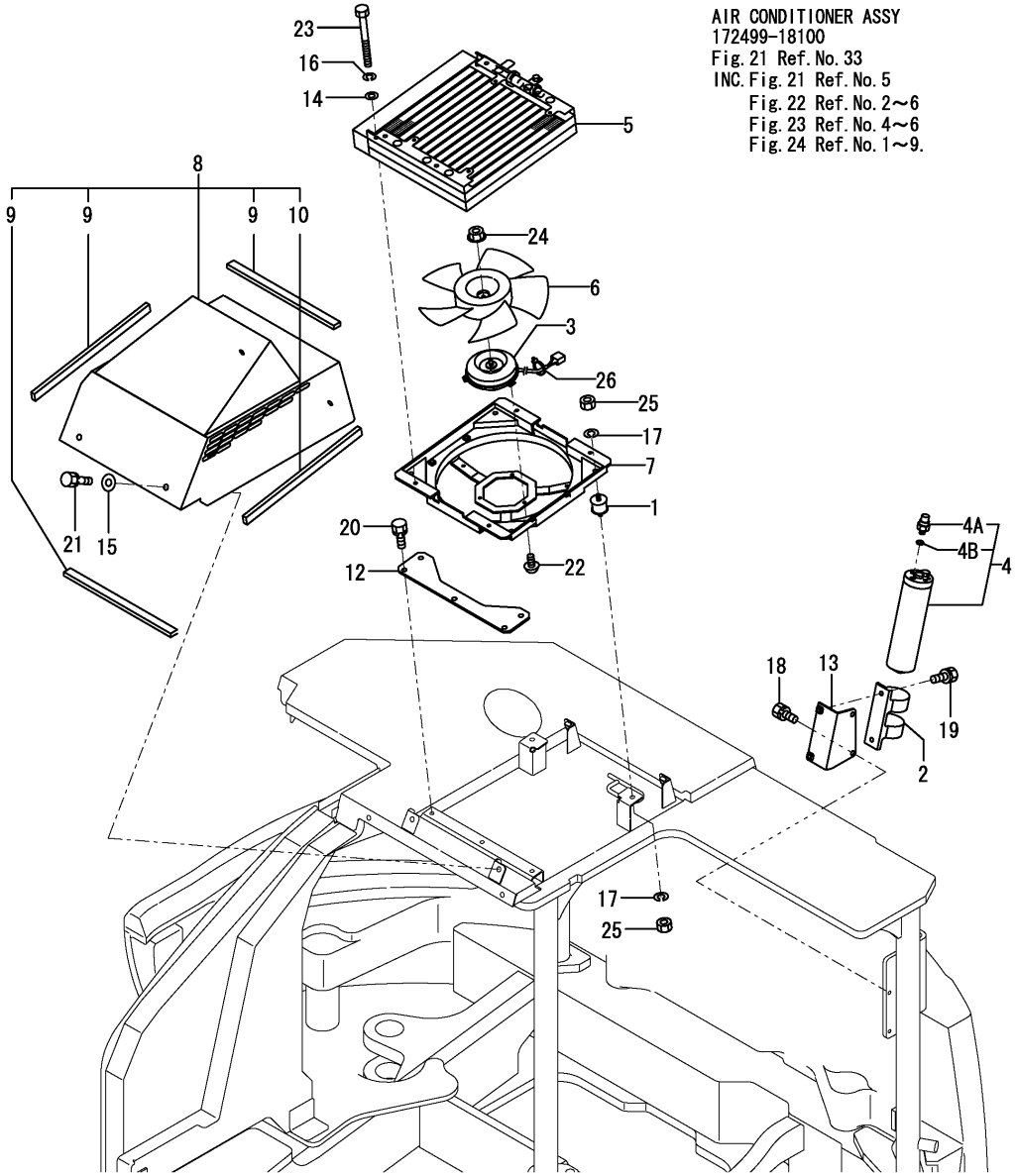

AIR CONDITIONER ASSY
172499-18100
Fig. 21 Ref. No. 33
INC. Fig. 21 Ref. No. 5
Fig. 22 Ref. No. 2～6
Fig. 23 Ref. No. 4～6
Fig. 24 Ref. No. 1～9.

(A)=SV100(US) (D)=
(B)=SV100(AS) (E)=
(C)=SV100(NZ) (F)=

No.	Lev.	Parts No.	Description	Q'ty (A)	(B)	(C)	(D)	(E)	(F)	I	R
1	1	172122-13310	MOUNT, RADIATOR	4	4	4					
2	1	172162-18040	BRACKET	1	1	1					
3	1	172164-18080	MOTOR	1	1	1					
4	1	172187-18110	DRIER ASSY, RECEIVER	1	1	1					
4A	2	198146-87120	SWITCH, PRESSURE	1	1	1				W	
	(A=M/#00949)	(B=M/#00949)	(C=M/#00949)								
4B	2	198083-87570	O-RING	1	1	1				W	
	(A=M/#00949)	(B=M/#00949)	(C=M/#00949)								
5	1	172164-18780	CONDENSER	1	1	1					
6	1	172164-18790	FAN	1	1	1					
7	1	172455-18290	COVER ASSY, FAN	1	1	1					
8	1	172455-18332-1	COVER ASSY	1	1	1					
8-1	1	172455-18332-2	COVER ASSY	1	1	1				S	
	(A=M/#01231)	(B=M/#01231)	(C=M/#01231)								
9	2	172455-18340	SEAL	3	3	3					
10	2	172455-18350	SEAL	1	1	1					
12	1	172455-18500	PLATE, COND.	1	1	1					
13	1	172455-18940	BRACKET, R/D	1	1	1					
14	1	22137-060000	WASHER, 6	4	4	4					
15	1	22137-100000	WASHER, 10	4	4	4					
16	1	22217-060000	WASHER, SPRING 6	4	4	4					
17	1	22217-080000	WASHER, SPRING 8	8	8	8					
18	1	26013-080122	BOLT, M8X 12	2	2	2					
19	1	26013-080202	BOLT, M8X 20	2	2	2					
20	1	26013-080202	BOLT, M8X 20	3	3	3					
21	1	26013-100202	BOLT, M10X 20	4	4	4					
22	1	26023-050122	SCREW, M5X12	3	3	3					
23	1	26116-060602	BOLT, M6X 60 PLATED	4	4	4					
24	1	26367-050002	NUT, M5	1	1	1					
25	1	26716-080002	NUT, M8	8	8	8					
26	1	933152-09280	BAND 170	2	2	2					

N:Old $\overset{\text{Yes}}{\underset{\text{No}}{\leftrightarrow}}$ New, Q:Old $\overset{\text{No}}{\underset{\text{Yes}}{\leftrightarrow}}$ New, R:Old $\overset{\text{Yes}}{\underset{\text{Yes}}{\leftrightarrow}}$ New, S:Old $\overset{\text{No}}{\underset{\text{No}}{\leftrightarrow}}$ New, W:Add, Z:Discontinued, F:Interchangeable by set, K:Q'ty Change

Copyright (C) YANMAR CO., LTD. All RightsReserved.

Fig.23. AIR CONDITIONER(CABIN RELATED)

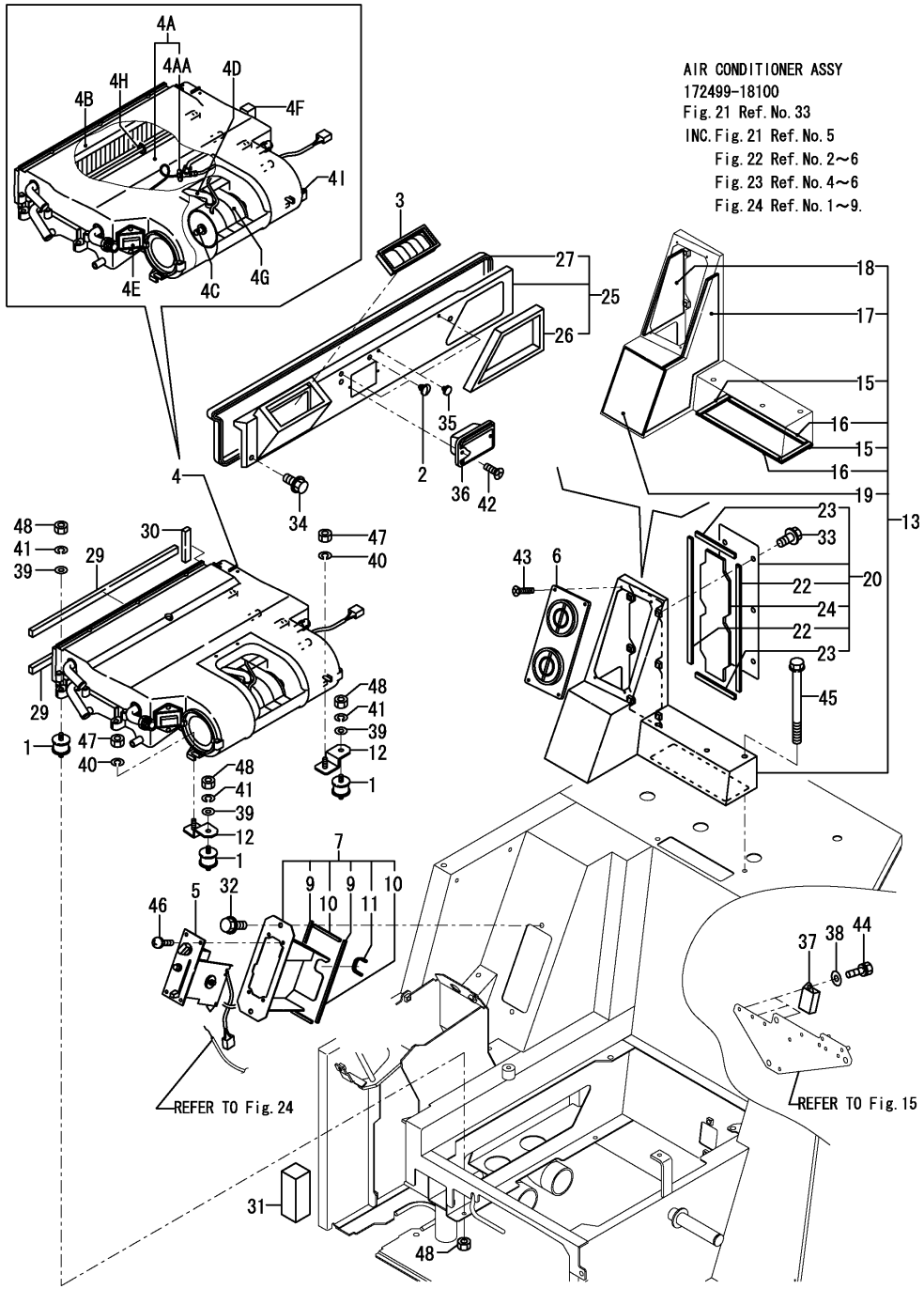

(A)=SV100(US) (D)=
(B)=SV100(AS) (E)=
(C)=SV100(NZ) (F)=

No.	Lev.	Parts No.	Description	Q'ty (A)	(B)	(C)	(D)	(E)	(F)	I	R
1	1	172124-13500	MOUNT, RADIATOR	4	4	4					
2	1	172444-17660	CLIP, TREE	2	2	2					
3	1	172458-17700	GRILLE	1	1	1					
4	1	172455-18120	CONDITIONER, AIR	1	1	1					
4A	2	172455-18010	EVAPORATOR ASSY	1	1	1				W	
	(A=M/#00515)	(B=M/#00515)	(C=M/#00515)								
4AA	3	172455-18080	VALVE,EXPANSION	1	1	1				W	
	(A=MXXXXX)	(B=MXXXXX)	(C=MXXXXX)								
4B	2	172455-18020	CORE ASSY, HEATER	1	1	1				W	
	(A=M/#00515)	(B=M/#00515)	(C=M/#00515)								
4C	2	172455-18030	FAN MOTOR	1	1	1				W	
	(A=M/#00515)	(B=M/#00515)	(C=M/#00515)								
4D	2	172455-18040	HOSE, AIR	1	1	1				W	
	(A=M/#00515)	(B=M/#00515)	(C=M/#00515)								
4E	2	172455-18050	RESISTOR	1	1	1				W	
	(A=M/#00515)	(B=M/#00515)	(C=M/#00515)								
4F	2	172455-18060	THERMOSTAT	1	1	1				W	
	(A=M/#00515)	(B=M/#00515)	(C=M/#00515)								
4G	2	172455-18070	ISOLATOR	1	1	1				W	
	(A=M/#00515)	(B=M/#00515)	(C=M/#00515)								
4H	2	198244-87040	CLIP	1	1	1				W	
	(A=M/#00515)	(B=M/#00515)	(C=M/#00515)								
4I	2	198244-88040	SCREW, TAPPING M4X16	16	16	16				W	
	(A=M/#00515)	(B=M/#00515)	(C=M/#00515)								
5	1	172455-18140	SWITCH, CONTROL	1	1	1					
6	1	197821-88070	GRILLE	1	1	1					
7	1	172499-18340	COVER ASSY	1	1	1					
7-1	1	172499-18340-1	COVER ASSY	1	1	1				S	
	(A=M/#00758)	(B=M/#00758)	(C=M/#00758)								
9	2	172499-18400	SEAL, COVER	2	2	2					
10	2	172499-18410	SEAL, COVER	2	2	2					
11	2	172458-18850	TRIM	1	1	1					
11-1	2	172175-65641	TRIM	1	1	1				N	
	(A=M/#01663)	(B=M/#01663)	(C=M/#01663)								
12	1	172455-18520	BRACKET, A/U	2	2	2					
13	1	172499-18600	DUCT ASSY	1	1	1					
13-1	1	172499-18600-1	DUCT ASSY	1	1	1				S	
	(A=M/#00758)	(B=M/#00758)	(C=M/#00758)								
15	2	172499-18700	SEAL, DUCT	2	2	2					
16	2	172499-18710	SEAL, DUCT	2	2	2					
17	2	172499-18720	SHEET, INSULATOR	1	1	1					
18	2	172499-18730	SHEET, INSULATOR	1	1	1					
19	2	172499-18740	SHEET, INSULATOR	1	1	1					
20	1	172499-18750	COVER ASSY, DUCT	1	1	1					
20-1	1	172499-18750-1	COVER ASSY, DUCT	1	1	1				S	
	(A=M/#00758)	(B=M/#00758)	(C=M/#00758)								
22	2	172499-18770	SEAL, DUCT	2	2	2					
23	2	172499-18780	SEAL, DUCT	2	2	2					
24	2	172499-18790	SHEET, INSULATOR	1	1	1					
25	1	172499-18800	DUCT ASSY, CABIN	1	1	1					
25-1	1	172499-18800-1	DUCT ASSY, CABIN	1	1	1				S	

N:Old $\xleftrightarrow[\text{No}]{\text{Yes}}$ New, Q:Old $\xleftrightarrow[\text{Yes}]{\text{No}}$ New, R:Old $\xleftrightarrow[\text{Yes}]{\text{Yes}}$ New, S:Old $\xleftrightarrow[\text{No}]{\text{No}}$ New, W:Add, Z:Discontinued, F:Interchangeable by set, K:Q'ty Change

++ CONTINUE ++

Copyright (C) YANMAR CO., LTD. All RightsReserved.

Fig.23. AIR CONDITIONER(CABIN RELATED)

(A)=SV100(US) (D)=
(B)=SV100(AS) (E)=
(C)=SV100(NZ) (F)=

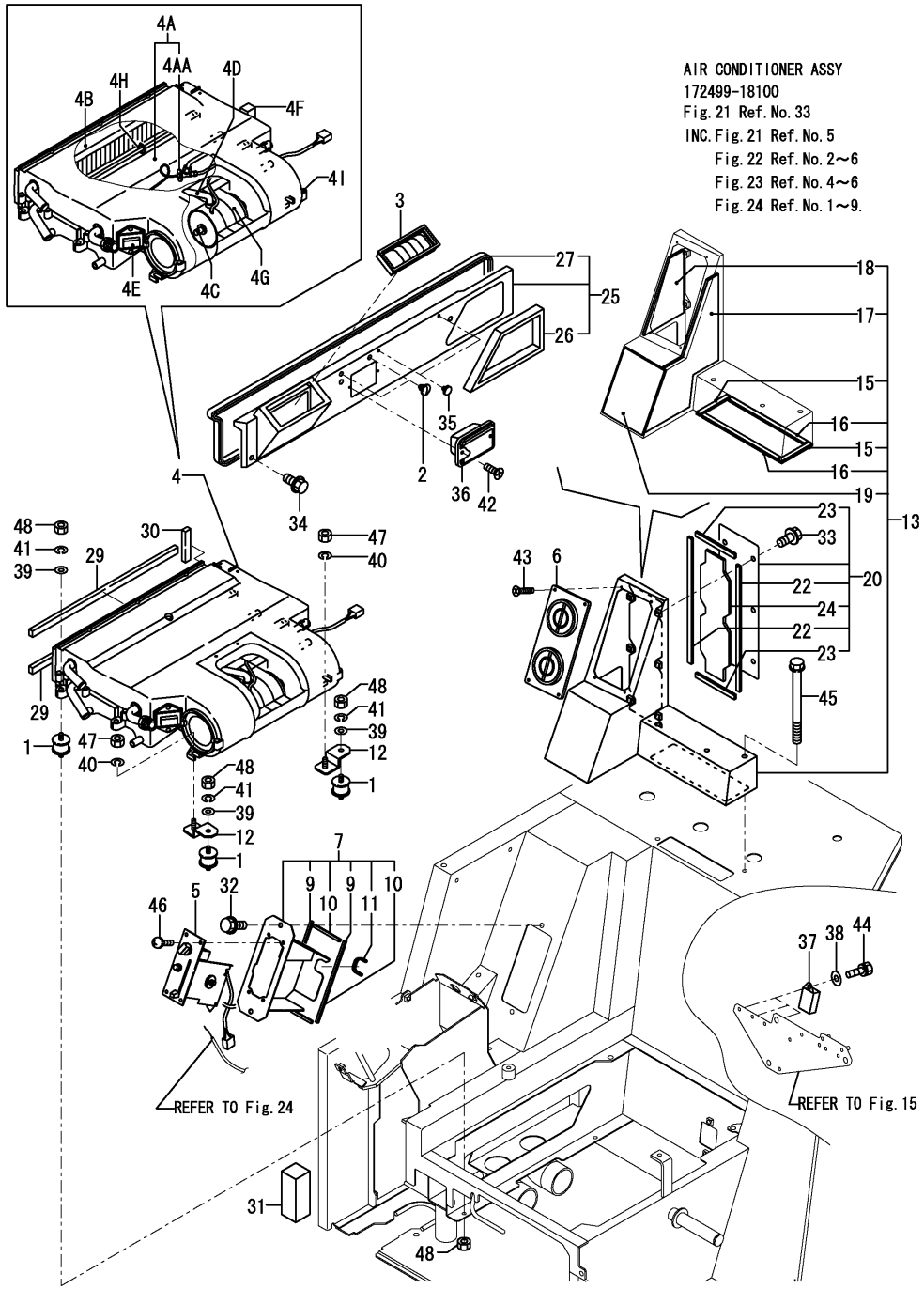

No.	Lev.	Parts No.	Description	Q'ty (A)	(B)	(C)	(D)	(E)	(F)	I	R
	(A=M/#00758)	(B=M/#00758)	(C=M/#00758)								
26	2	172455-18811	SEAL, DUCT	1	1	1					
27	2	172455-18820	SEAL, DUCT	1	1	1					
29	1	172455-18860	SEAL	2	2	2					
30	1	172455-18870	SEAL	1	1	1					
31	1	172499-18940	SEAL, SPONGE	1	1	1					
32	1	172519-63240	BOLT	2	2	2					
33	1	172519-63240	BOLT	6	6	6					
33-1	1	172455-61710	BOLT M 8X 16	6	6	6				N	
	(A=M/#00699)	(B=M/#00699)	(C=M/#00699)								
34	1	172165-66980	BOLT	4	4	4					
35	1	172176-67790	PLUG	2	2	2					
36	1	172478-68900	ASHTRAY	1	1	1					
37	1	119247-77100	RELAY, SAFETY	3	3	3					
38	1	22137-060000	WASHER, 6	3	3	3					
39	1	22137-080000	WASHER, 8	4	4	4					
40	1	22217-080000	WASHER, SPRING 8	2	2	2					
41	1	22217-080000	WASHER, SPRING 8	4	4	4					
42	1	22867-400100	SCREW, 4X10	2	2	2					
43	1	22869-400160	SCREW, 4X16	4	4	4					
44	1	26013-060122	BOLT, M6X 12	3	3	3					
45	1	26013-080902	BOLT, M8X 90	2	2	2					
46	1	26559-050202	SCREW, M5X20	4	4	4					
47	1	26712-080002	NUT, M8	2	2	2					
47-1	1	26716-080002	NUT, M8	2	2	2				N	
	(A=M/#00778)	(B=M/#00778)	(C=M/#00778)								
48	1	26712-080002	NUT, M8	8	8	8					
48-1	1	26716-080002	NUT, M8	8	8	8				N	
	(A=M/#00778)	(B=M/#00778)	(C=M/#00778)								

N:Old $\xleftarrow[\text{No}]{\text{Yes}}$ New, Q:Old $\xleftarrow[\text{Yes}]{\text{No}}$ New, R:Old $\xleftarrow[\text{Yes}]{\text{Yes}}$ New, S:Old $\xleftarrow[\text{No}]{\text{No}}$ New, W:Add, Z:Discontinued, F:Interchangeable by set, K:Q'ty Change

Copyright (C) YANMAR CO., LTD. All RightsReserved.

Fig.24. AIR CONDITIONER(PIPING)

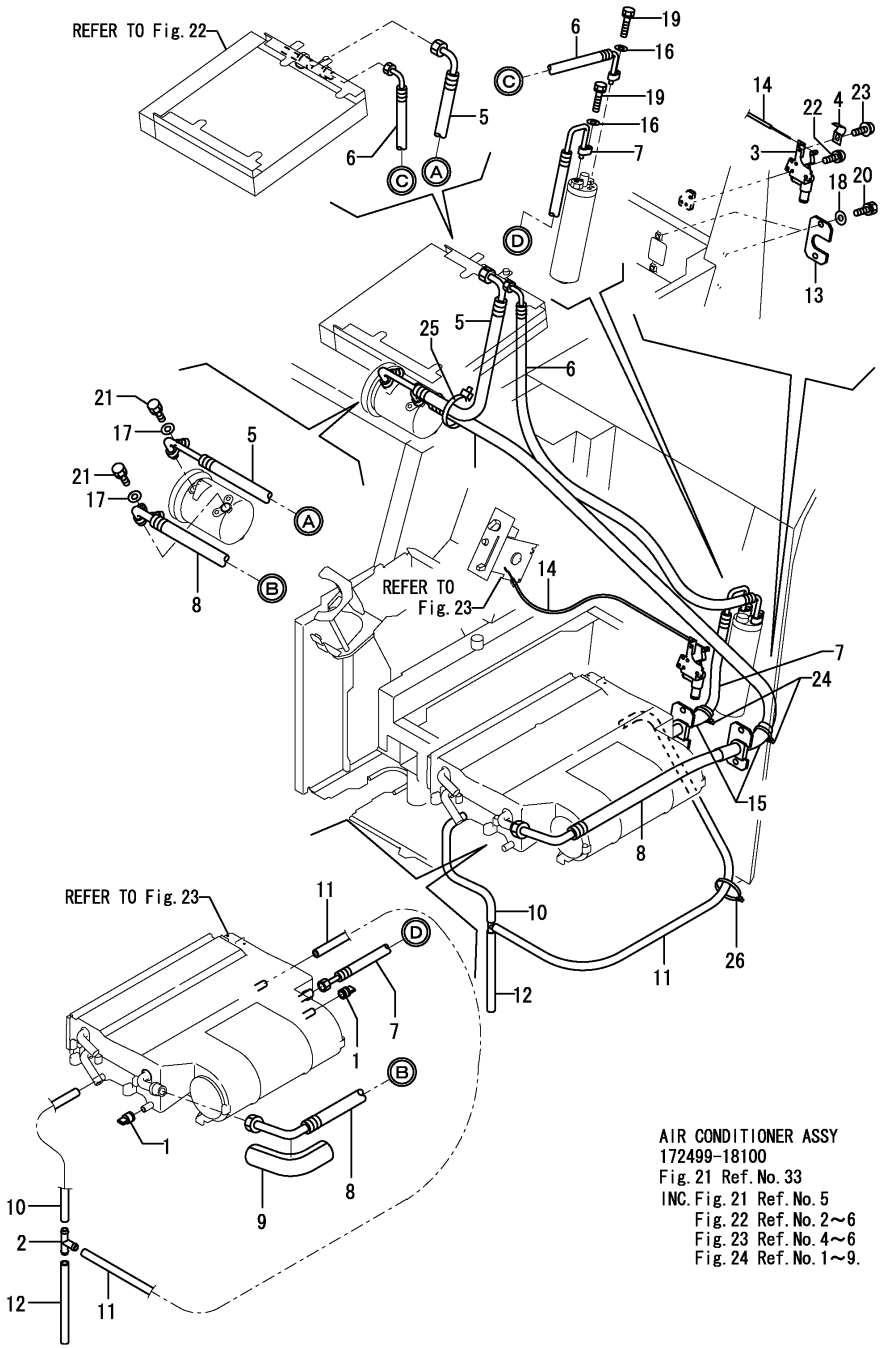

(A)=SV100(US) (D)=
(B)=SV100(AS) (E)=
(C)=SV100(NZ) (F)=

No.	Lev.	Parts No.	Description	Q'ty (A)	(B)	(C)	(D)	(E)	(F)	I	R
1	1	172162-18070	PLUG, DRAIN	2	2	2					
2	1	172165-18080	CONNECTOR	1	1	1					
3	1	172455-18160	VALVE, HOT WATER	1	1	1					
4	1	172455-18170	CLAMP, WIRE	1	1	1					
5	1	172455-18180	HOSE	1	1	1					
6	1	172455-18190	HOSE	1	1	1					
7	1	172499-18200	HOSE	1	1	1					
8	1	172455-18210	HOSE	1	1	1					
9	1	197821-88380	INSULATOR	1	1	1					
10	1	172455-18250	HOSE, DRAIN	1	1	1					
11	1	172455-18260	HOSE, DRAIN	1	1	1					
12	1	172455-18270	HOSE, DRAIN	1	1	1					
13	1	172455-18510	PLATE	2	2	2					
14	1	172455-18540	WIRE, VALVE	1	1	1					
15	1	172455-19210	SPONGE, HOSE	2	2	2					
16	1	22137-060000	WASHER, 6	2	2	2					
17	1	22137-080000	WASHER, 8	2	2	2					
18	1	22137-080000	WASHER, 8	4	4	4					
19	1	26013-060252	BOLT, M6X 25	2	2	2					
20	1	26013-080202	BOLT, M8X 20	4	4	4					
21	1	26013-080252	BOLT, M8X 25	2	2	2					
22	1	26022-050102	SCREW, M5X10	3	3	3					
23	1	26023-040082	SCREW, M4X 8	1	1	1					
24	1	933152-09280	BAND 170	2	2	2					
25	1	933152-09280	BAND 170	1	1	1					
26	1	933152-09280	BAND 170	1	1	1					

N:Old $\overset{\text{Yes}}{\underset{\text{No}}{\leftrightarrow}}$ New, Q:Old $\overset{\text{No}}{\underset{\text{Yes}}{\leftrightarrow}}$ New, R:Old $\overset{\text{Yes}}{\underset{\text{Yes}}{\leftrightarrow}}$ New, S:Old $\overset{\text{No}}{\underset{\text{No}}{\leftrightarrow}}$ New, W:Add, Z:Discontinued, F:Interchangeable by set, K:Q'ty Change

Copyright (C) YANMAR CO., LTD. All RightsReserved.

Fig.25. SPROCKET & ROLLER

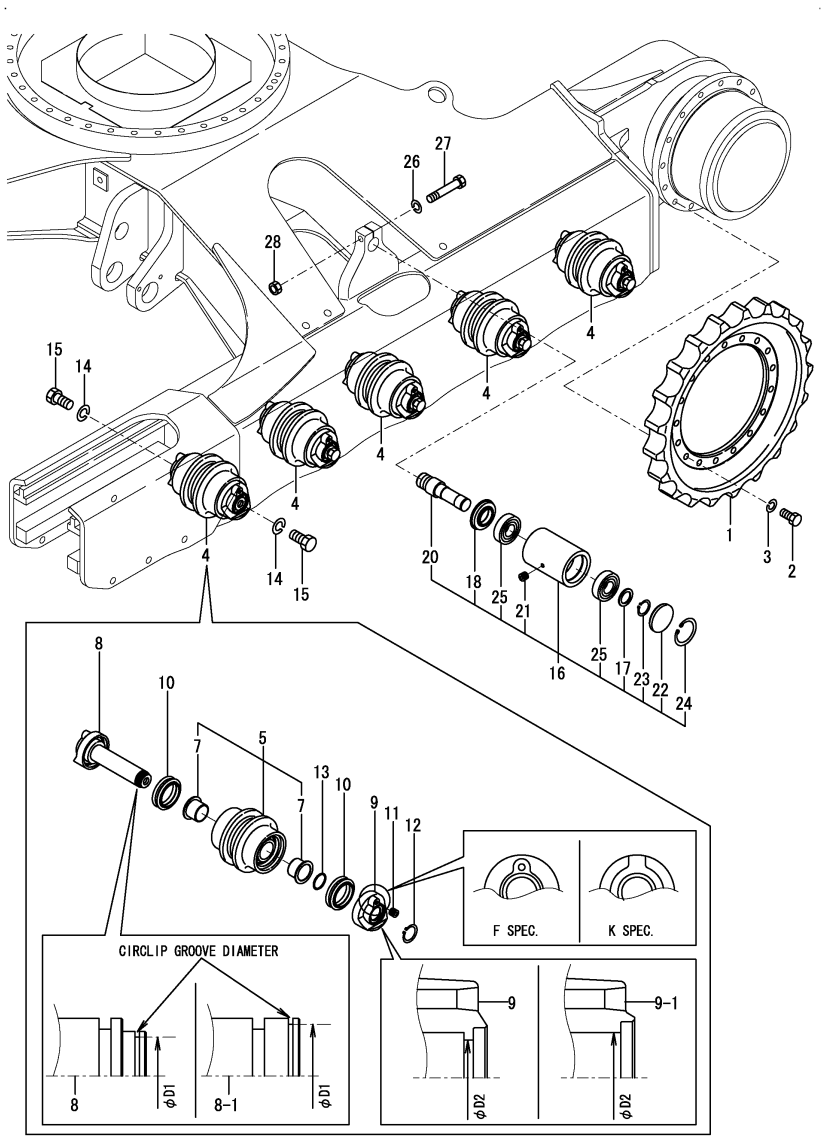

(A)=SV100(US) (D)=
(B)=SV100(AS) (E)=
(C)=SV100(NZ) (F)=

No.	Lev.	Parts No.	Description	Q'ty (A)	(B)	(C)	(D)	(E)	(F)	I	R
1	1	172499-29100	SPROCKET	2	2	2					
1-1	1	172499-29100-1	SPROCKET, 21	2	2	2				S	
	(A=M/#00758)	(B=M/#00758)	(C=M/#00758)								
2	1	172460-73320	BOLT	30	30	30					
3	1	22217-160000	WASHER, SPRING 16	30	30	30					
4	1	172499-37300	ROLLER ASSY, LOWER	10	10	10					
4-1	1	172499-37300-2	ROLLER ASSY,LOWER(49	10	10	10				S	
	(A=M/#00758)	(B=M/#00758)	(C=M/#00758)								
4-2	1	172499-37301	ROLLER ASSY	10	10	10				N	
	(A=M/#01571)	(B=M/#01571)	(C=M/#01571)								
4-3	1	172499-37301	ROLLER ASSY	10	10	10				Z	3
	(A=*2014.09)	(B=*2014.09)	(C=*2014.09)								
5	2	172499-37310	ROLLER ASSY	10	10	10					
7	3	172499-37360	BUSH	20	20	20					
8	2	172499-37330	SHAFT ASSY, ROLLER	10	10	10					1
8-1	2	172499-37331-1	ROLLER ASSY	10	10	10				S	1
	(A=M/#01571)	(B=M/#01571)	(C=M/#01571)								
9	2	172499-37370	COVER, SEAL	10	10	10					2
9-1	2	172499-37371	COVER, SEAL	10	10	10				S	2
	(A=M/#01571)	(B=M/#01571)	(C=M/#01571)								
10	2	172499-37380	SEAL, FLOATING	20	20	20					
11	2	194630-42120	PLUG, PT1/8	10	10	10					
12	2	22242-000400	RING, 40	10	10	10					
12-1	2	22242-000450	RING, 45	10	10	10				S	
	(A=M/#01571)	(B=M/#01571)	(C=M/#01571)								
13	2	24321-000400	O-RING, 1AG40.0	10	10	10					
14	1	22217-200000	WASHER, SPRING 20	20	20	20					
15	1	26116-200402	BOLT, M20X 40 PLATED	20	20	20					
15-1	1	26076-200409	BOLT, 10.920X 40	20	20	20				N	
	(A=M/#01726)	(B=M/#01726)	(C=M/#01726)								
16	1	172499-37500	ROLLER ASSY, CARRIER	2	2	2					
16-1	1	172499-37500-1	ROLLER ASSY, CARRIER	2	2	2				S	
	(A=M/#00758)	(B=M/#00758)	(C=M/#00758)								
17	2	172730-31630	COLLAR	2	2	2					
18	2	172164-37120	SEAL, OIL	2	2	2					
20	2	172499-37520	SHAFT, ROLLER	2	2	2					
21	2	194630-42120	PLUG, PT1/8	2	2	2					
22	2	1T3681-86450	PLUG	2	2	2					
23	2	22242-000350	RING, 35	2	2	2					
24	2	22252-000800	RING, 80	2	2	2					
25	2	24101-063074	BEARING, BALL 6307	4	4	4					
26	1	22217-160000	WASHER, SPRING 16	2	2	2					
27	1	26116-160852	BOLT, M16X 85 PLATED	2	2	2					
28	1	26716-160002	NUT, M16	2	2	2					

Remarks
(1)CIRCLIP GROOVE DIAMETER
REF.NO.8 D1=37.3MM,
NO.8-1 D1=42.5MM.
(2)REF.NO.9 D2=39MM,NO.9-1 D2=45MM.
(3)Replacement with Fig.105(25A) No.1.
The inner parts are not compatible.

N:Old $\overset{\text{Yes}}{\underset{\text{No}}{\leftrightarrow}}$ New, Q:Old $\overset{\text{No}}{\underset{\text{Yes}}{\leftrightarrow}}$ New, R:Old $\overset{\text{Yes}}{\underset{\text{Yes}}{\leftrightarrow}}$ New, S:Old $\overset{\text{No}}{\underset{\text{No}}{\leftrightarrow}}$ New, W:Add, Z:Discontinued, F:Interchangeable by set, K:Q'ty Change

Copyright (C) YANMAR CO., LTD. All RightsReserved.

Fig.105. (25A)TRACK ROLLER(K SPEC.)

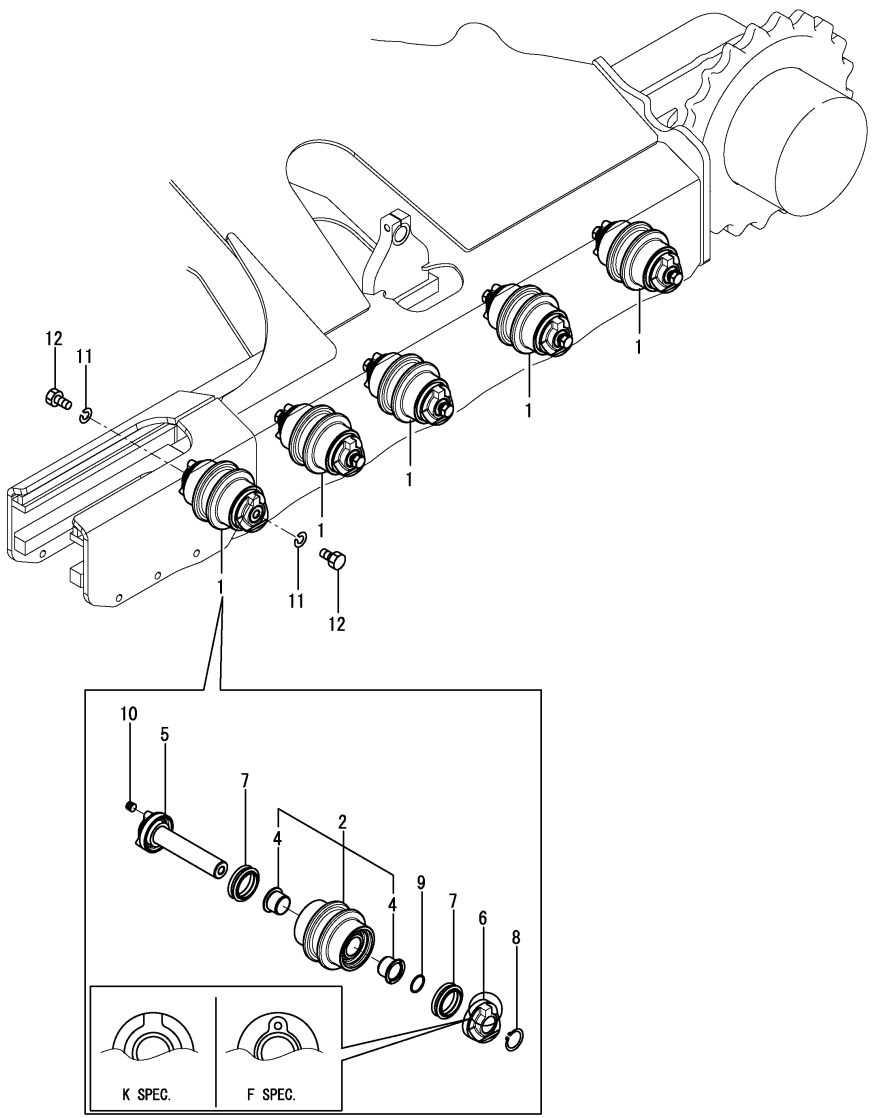

(A)=SV100(US) (D)=
(B)=SV100(AS) (E)=
(C)=SV100(NZ) (F)=

No.	Lev.	Parts No.	Description	Q'ty (A)	(B)	(C)	(D)	(E)	(F)	I	R
1	1	172B12-37300	ROLLER ASSY, LOWER	10	10	10				W	1
	(A=*2014.09)	(B=*2014.09)	(C=*2014.09)								
2	2	172B12-37310	ROLLER ASSY, LOWER	10	10	10					
4	3	172B12-37330	BUSH	20	20	20					
5	2	172B12-37340	SHAFT ASSY	10	10	10					
6	2	172B12-37370	COVER, SEAL R	10	10	10					
7	2	172B12-37380	SEAL, FLOATING	20	20	20					
8	2	22242-000450	RING, 45	10	10	10					
9	2	24321-000400	O-RING, 1AG40.0	10	10	10					
10	2	933171-13691	PLUG	10	10	10					
11	1	22217-200000	WASHER, SPRING 20	20	20	20					
12	1	26076-200409	BOLT, 10.920X 40	20	20	20					

Remarks
(1)Track roller(F spec.) are shown in Fig.25.
The inner parts are not compatible.

N:Old $\frac{\text{Yes}}{\text{No}}$ New, Q:Old $\frac{\text{No}}{\text{Yes}}$ New, R:Old $\frac{\text{Yes}}{\text{Yes}}$ New, S:Old $\frac{\text{No}}{\text{No}}$ New, W:Add, Z:Discontinued, F:Interchangeable by set, K:Q'ty Change

Copyright (C) YANMAR CO., LTD. All RightsReserved.

Fig.26. IDLER & ADJUST

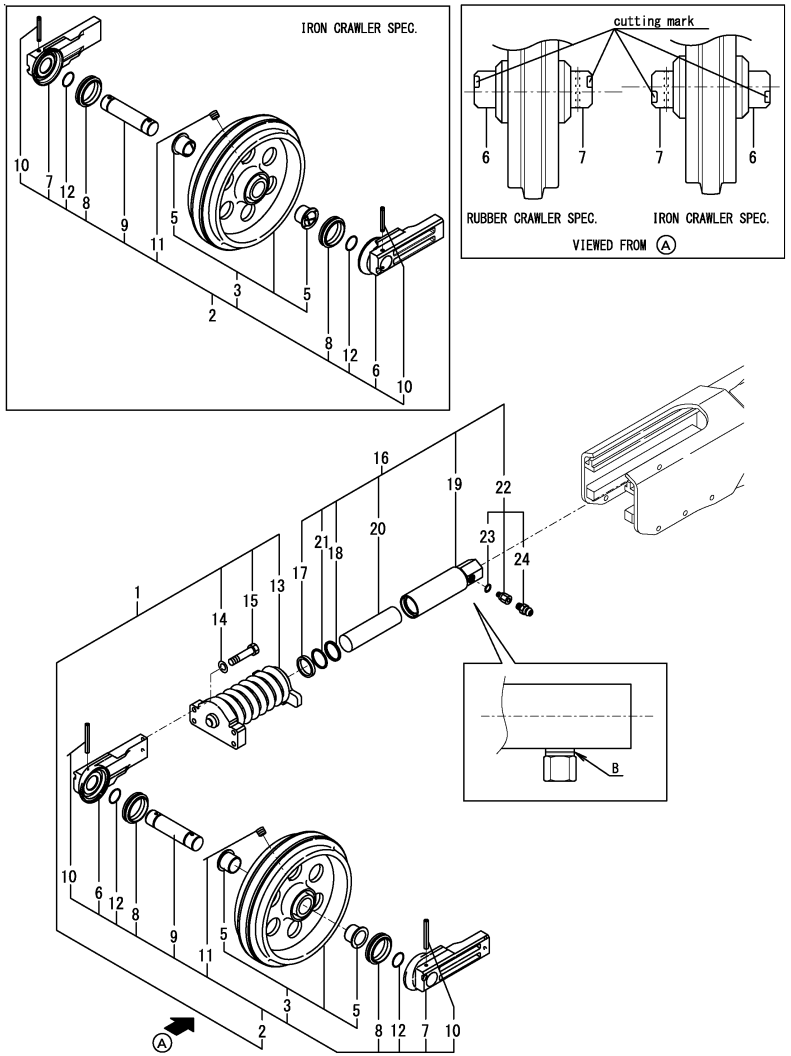

(A)=SV100(US) (D)=
(B)=SV100(AS) (E)=
(C)=SV100(NZ) (F)=

No.	Lev.	Parts No.	Description	Q'ty (A)	(B)	(C)	(D)	(E)	(F)	I	R
1	1	772499-37100	IDLER ASSY	2	2	2					
2	2	172499-37101	IDLER ASSY	2	2	2					1
2-1	2	172499-37101-1	IDLER ASSY	2	2	2				S	1
	(A=M/#00758)	(B=M/#00758)	(C=M/#00758)								
3	3	172499-37111	IDLER, 450	2	2	2					
5	4	172499-37131	BUSH	4	4	4					
6	3	172499-37142	COVER, IDLER SEAL	2	2	2					
7	3	172499-37152	COVER, IDLER SEAL	2	2	2					
8	3	172499-37161	SEAL, FLOATING	4	4	4					
9	3	172499-37172	SHAFT, IDLER	2	2	2					
10	3	172499-37180	PIN, SPRING	4	4	4					
11	3	23876-020000	PLUG, R02	2	2	2					
12	3	24311-000490	O-RING, 1AP49.0	4	4	4					
13	2	172499-37700	ADJUSTER ASSY	2	2	2					
13-1	2	172499-37700-1	ADJUSTER ASSY	2	2	2				S	
	(A=M/#00758)	(B=M/#00758)	(C=M/#00758)								
14	2	22217-160000	WASHER, SPRING 16	8	8	8					
15	2	26116-160702	BOLT M16X 70 PLATED	8	8	8					
16	1	172499-37750	CYLINDER ASSY	2	2	2					
16-1	1	172499-37750-1	CYLINDER ASSY	2	2	2				S	
	(A=M/#00758)	(B=M/#00758)	(C=M/#00758)								
16-2	1	172499-37750-1	CYLINDER ASSY	2	2	2				Z	2
	(A=*2016.05)	(B=*2016.05)	(C=*2016.05)								
17	2	172020-10390	SEAL, DUST	2	2	2					
18	2	172020-10400	SEAL	2	2	2					
18-1	2	172020-10401	SEAL	2	2	2				R	
	(A=M/#00699)	(B=M/#00699)	(C=M/#00699)								
19	2	172499-37760	TUBE ASSY, ADJUST	2	2	2					
20	2	172499-37790	PISTON	2	2	2					
21	2	172499-37800	RING, BUCK UP	2	2	2					
22	2	172122-37844	VALVE ASSY, NIPPLE	2	2	2					
23	3	24315-000140	O-RING, 1BP14.0	2	2	2					
24	3	24761-020000	NIPPLE, GREASE PT1/8	2	2	2					

Remarks
* B : Y specifications have a slit for the identification.
S specifications do not have a slit for the identification.
S specifications are shown in Fig.106(26A).
(1)This part is used both rubber crawler & iron crawler.
When constructing Idler Assy, The direction of cutting mark of idler seal cover A & B is the opposite side concerning rubber crawler & iron crawler.
(2)Interchangeable by Fig.106(26A) No.1.
The inner parts are not compatible.

N:Old ◄Yes/No► New, Q:Old ◄No/Yes► New, R:Old ◄Yes/Yes► New, S:Old ◄No/No► New, W:Add, Z:Discontinued, F:Interchangeable by set, K:Q'ty Change

Copyright (C) YANMAR CO., LTD. All RightsReserved.

Fig.106. (26A)CRAWLER ADJUST(S SPEC.)

(A)=SV100(US) (D)=
(B)=SV100(AS) (E)=
(C)=SV100(NZ) (F)=

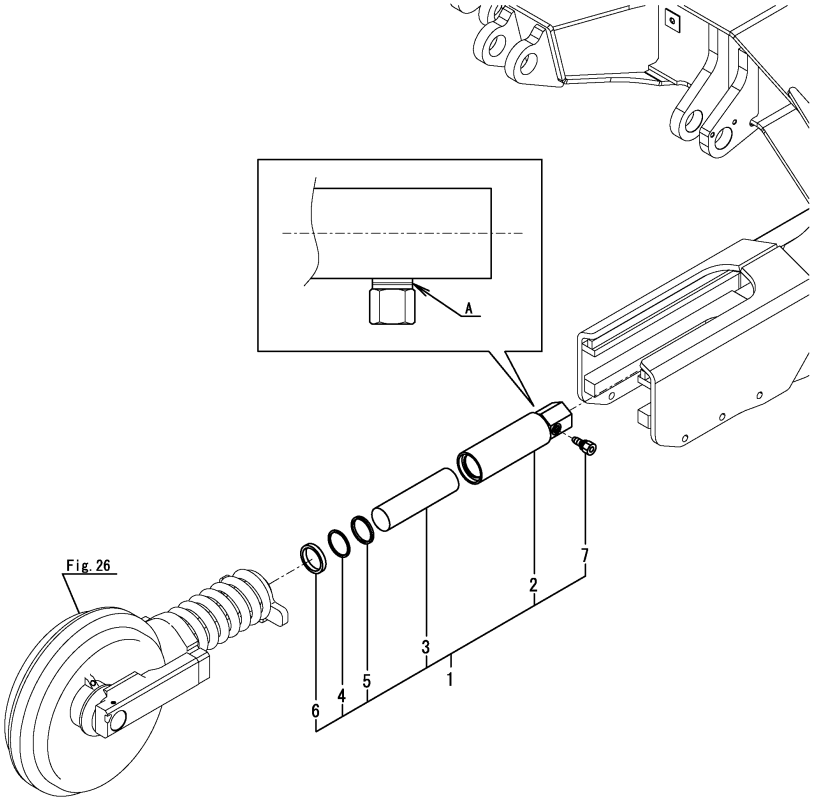

No.	Lev.	Parts No.	Description	Q'ty (A)	(B)	(C)	(D)	(E)	(F)	I	R
1	1	172B12-37750	CYLINDER ASSY, ADJUS	2	2	2				W	
	(A=*2016.05)	(B=*2016.05)	(C=*2016.05)								
2	2	172B12-37760	TUBE ASSY,ADJUST	2	2	2					
3	2	172B12-37790	PISTON	2	2	2					
4	2	172B12-37800	RING, BACK UP	2	2	2					
5	2	172B12-37810	SEAL, ISI 65X75X6	2	2	2					
6	2	172B12-37820	SEAL, DUST65X75X11	2	2	2					
7	2	172B06-37951	NIPPLE,VALVE	2	2	2					

Remarks
* A : Y specifications have a slit for the identification.
S specifications do not have a slit for the identification.
Y specifications are shown in Fig.26.
The inner parts are not compatible.

N:Old $\xleftrightarrow[\text{No}]{\text{Yes}}$ New, Q:Old $\xleftrightarrow[\text{Yes}]{\text{No}}$ New, R:Old $\xleftrightarrow[\text{Yes}]{\text{Yes}}$ New, S:Old $\xleftrightarrow[\text{No}]{\text{No}}$ New, W:Add, Z:Discontinued, F:Interchangeable by set, K:Q'ty Change

Copyright (C) YANMAR CO., LTD. All RightsReserved.

Fig.27. CRAWLER

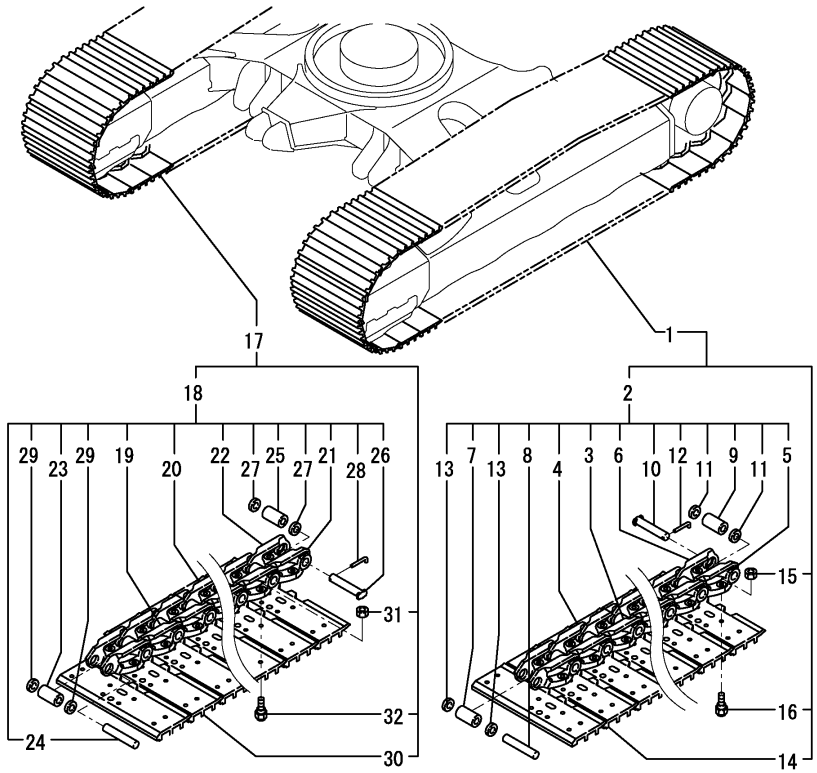

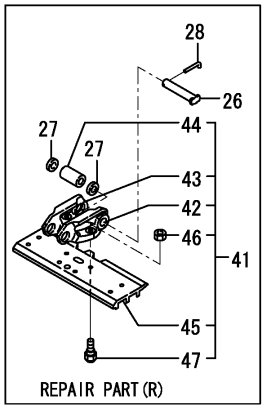

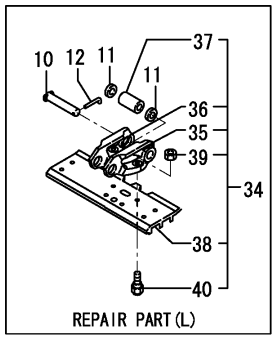

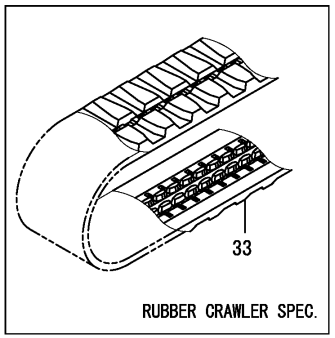

Remarks
(1)IRON CRAWLER SPEC.
(2)RUBBER CRAWLER SPEC.
(3)REPAIR PARTS.

(A)=SV100(US) (D)=
(B)=SV100(AS) (E)=
(C)=SV100(NZ) (F)=

No.	Lev.	Parts No.	Description	Q'ty (A)	(B)	(C)	(D)	(E)	(F)	I	R
1	1	172499-38100	SHOE ASSY, TRACK 475	1	1	1					1
1-1	1	172499-38100-1	SHOE ASSY, TRACK 475	1	1	1				S	1
	(A=M/#00758)	(B=M/#00758)	(C=M/#00758)								
2	2	172499-38120	LINK ASSY	1	1	1					
3	3	172499-38180	LINK, TRACK L	37	37	37					
4	3	172499-38190	LINK, TRACK R	37	37	37					
5	3	172499-38200	LINK, MASTER L	1	1	1					
6	3	172499-38210	LINK, MASTER R	1	1	1					
7	3	172499-38220	BUSH, TRUCK	37	37	37					
8	3	172499-38230	PIN, TRUCK	37	37	37					
9	3	172499-38240	BUSH, MASTER	1	1	1					
10	3	172499-38250	PIN,MASTER	1	1	1					
11	3	172499-38260	COLLAR	2	2	2					
12	3	172499-38270	PIN	1	1	1					
13	3	172499-38280	SEAL	74	74	74					
14	2	172499-38130	SHOE,TRUCK 475L (71)	38	38	38					
14-1	2	172499-38130-1	SHOE,TRUCK 475 L(49)	38	38	38				S	
	(A=M/#00758)	(B=M/#00758)	(C=M/#00758)								
15	2	172499-38160	NUT, SHOE	152	152	152					
16	2	172499-38170	BOLT,SHOE	152	152	152					
17	1	172499-38110	SHOE ASSY, TRACK 475	1	1	1					1
17-1	1	172499-38110-1	SHOE ASSY, TRACK 475	1	1	1				S	1
	(A=M/#00758)	(B=M/#00758)	(C=M/#00758)								
18	2	172499-38120	LINK ASSY	1	1	1					
19	3	172499-38180	LINK, TRACK L	37	37	37					
20	3	172499-38190	LINK, TRACK R	37	37	37					
21	3	172499-38200	LINK, MASTER L	1	1	1					
22	3	172499-38210	LINK, MASTER R	1	1	1					
23	3	172499-38220	BUSH, TRUCK	37	37	37					
24	3	172499-38230	PIN, TRUCK	37	37	37					
25	3	172499-38240	BUSH, MASTER	1	1	1					
26	3	172499-38250	PIN,MASTER	1	1	1					
27	3	172499-38260	COLLAR	2	2	2					
28	3	172499-38270	PIN	1	1	1					
29	3	172499-38280	SEAL	74	74	74					
30	2	172499-38140	SHOE,TRUCK 475R (71)	38	38	38					
30-1	2	172499-38140-1	SHOE ,TRUCK 475R(49)	38	38	38				S	
	(A=M/#00758)	(B=M/#00758)	(C=M/#00758)								
31	2	172499-38160	NUT, SHOE	152	152	152					
32	2	172499-38170	BOLT,SHOE	152	152	152					
33	1	172499-38600	CRAWLER, RUBBER 485	2	2	2					2
34	1	172499-38300	TRACK ASSY, MASTER	1	1	1					3
34-1	1	172499-38300-1	TRACK ASSY, MASTER	1	1	1				S	3
	(A=M/#00758)	(B=M/#00758)	(C=M/#00758)								
35	2	172499-38200	LINK, MASTER L	1	1	1					
36	2	172499-38210	LINK, MASTER R	1	1	1					
37	2	172499-38240	BUSH, MASTER	1	1	1					
38	2	172499-38130	SHOE,TRUCK 475L (71)	1	1	1					
38-1	2	172499-38130-1	SHOE,TRUCK 475 L(49)	1	1	1				S	
	(A=M/#00758)	(B=M/#00758)	(C=M/#00758)								
39	2	172499-38160	NUT, SHOE	4	4	4					

N:Old $\overset{\text{Yes}}{\underset{\text{No}}{\leftrightarrow}}$ New, Q:Old $\overset{\text{No}}{\underset{\text{Yes}}{\leftrightarrow}}$ New, R:Old $\overset{\text{Yes}}{\underset{\text{Yes}}{\leftrightarrow}}$ New, S:Old $\overset{\text{No}}{\underset{\text{No}}{\leftrightarrow}}$ New, W:Add, Z:Discontinued, F:Interchangeable by set, K:Q'ty Change

++ CONTINUE ++

Copyright (C) YANMAR CO., LTD. All RightsReserved.

Fig.27. CRAWLER

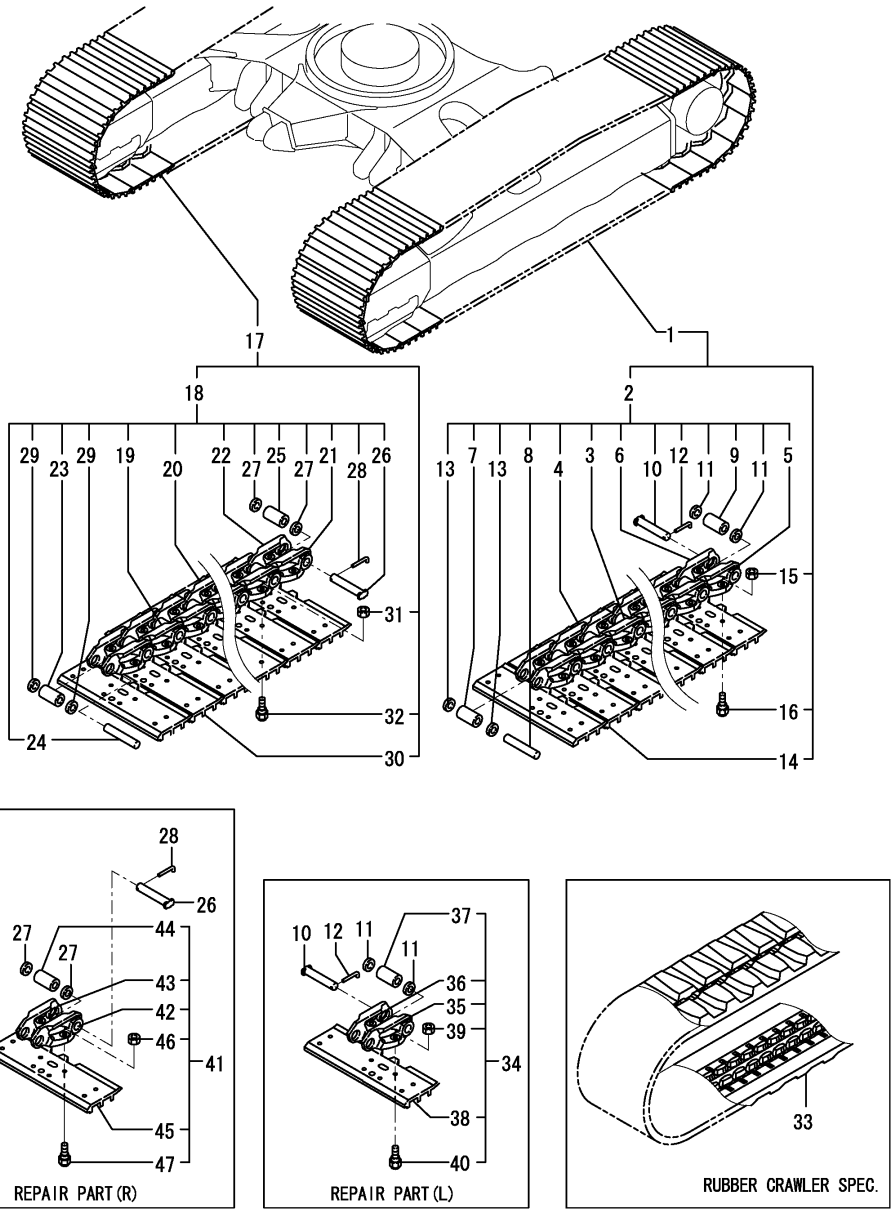

Remarks
(1)IRON CRAWLER SPEC.
(2)RUBBER CRAWLER SPEC.
(3)REPAIR PARTS.

(A)=SV100(US) (D)=
(B)=SV100(AS) (E)=
(C)=SV100(NZ) (F)=

No.	Lev.	Parts No.	Description	Q'ty (A)	(B)	(C)	(D)	(E)	(F)	I	R
40	2	172499-38170	BOLT,SHOE	4	4	4					
41	1	172499-38310	TRACK ASSY, MASTER	1	1	1					3
41-1	1	172499-38310-1	TRACK ASSY, MASTER	1	1	1				S	3
	(A=M/#00758)	(B=M/#00758)	(C=M/#00758)								
42	2	172499-38200	LINK, MASTER L	1	1	1					
43	2	172499-38210	LINK, MASTER R	1	1	1					
44	2	172499-38240	BUSH, MASTER	1	1	1					
45	2	172499-38140	SHOE,TRUCK 475R (71)	1	1	1					
45-1	2	172499-38140-1	SHOE ,TRUCK 475R(49)	1	1	1				S	
	(A=M/#00758)	(B=M/#00758)	(C=M/#00758)								
46	2	172499-38160	NUT, SHOE	4	4	4					
47	2	172499-38170	BOLT,SHOE	4	4	4					

N:Old $\overset{\text{Yes}}{\underset{\text{No}}{\leftrightarrow}}$ New, Q:Old $\overset{\text{No}}{\underset{\text{Yes}}{\leftrightarrow}}$ New, R:Old $\overset{\text{Yes}}{\underset{\text{Yes}}{\leftrightarrow}}$ New, S:Old $\overset{\text{No}}{\underset{\text{No}}{\leftrightarrow}}$ New, W:Add, Z:Discontinued, F:Interchangeable by set, K:Q'ty Change

Copyright (C) YANMAR CO., LTD. All RightsReserved.

Fig.28. CONTROL EQUIPMENT(LOCK LEVER & STAND)

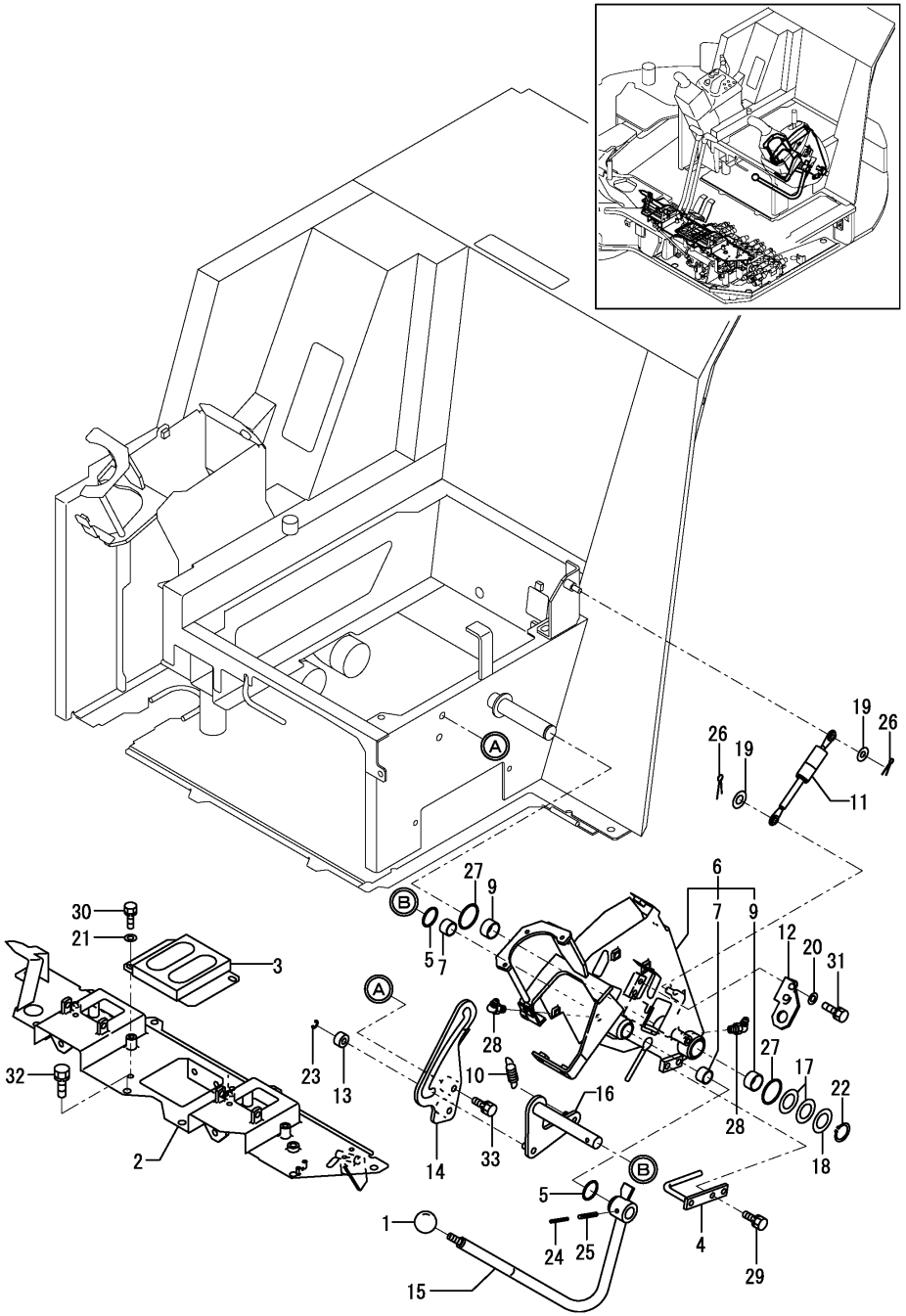

(A)=SV100(US) (D)=
(B)=SV100(AS) (E)=
(C)=SV100(NZ) (F)=

No.	Lev.	Parts No.	Description	Q'ty (A)	(B)	(C)	(D)	(E)	(F)	I	R
1	1	1D4070-23580	GRIP	1	1	1					
2	1	172478-45400	STAND ASSY, LINK	1	1	1					
2-1	1	172478-45400-1	STAND ASSY, LINK	1	1	1				S	
	(A=M/#00758)	(B=M/#00758)	(C=M/#00758)								
3	1	172455-45520	BRACKET,BOOT (12)	1	1	1					
4	1	172458-45850	GUIDE, HOSE	1	1	1					
5	1	172124-46200	O-RING	2	2	2					
6	1	172A21-46600	STAND ASSY, LEVER	1	1	1					
7	2	172141-41370	BUSH 2015	2	2	2					
9	2	24550-025150	BUSH, 25X15	2	2	2					
10	1	172162-46690	SPRING	1	1	1					
11	1	172455-46890	SPRING, GAS	1	1	1					
12	1	172455-46950	BRACKET, SWITCH	1	1	1					
13	1	172165-47550	BUSH	1	1	1					
14	1	172478-47600	GUIDE, LOCK	1	1	1					
14-1	1	172478-47600-1	GUIDE, LOCK	1	1	1				S	
	(A=M/#00758)	(B=M/#00758)	(C=M/#00758)								
15	1	172478-47621	LEVER L,LOCK(GRAY:72	1	1	1					
15-1	1	172478-47621-1	LEVER L,LOCK(GRAY:49	1	1	1				S	
	(A=M/#00758)	(B=M/#00758)	(C=M/#00758)								
16	1	172458-47640-4	ROD,SPRING (GRAY:72)	1	1	1					
16-1	1	172458-47640-1	ROD,SPRING (GRAY:49)	1	1	1				S	
	(A=M/#00758)	(B=M/#00758)	(C=M/#00758)								
17	1	172165-47980	SHIM	2	2	2					
18	1	172165-47990	WASHER 25.5X42	1	1	1					
19	1	22137-080000	WASHER, 8	2	2	2					
20	1	22137-080000	WASHER, 8	2	2	2					
21	1	22137-080000	WASHER, 8	2	2	2					
22	1	22242-000250	RING, 25	1	1	1					
23	1	22272-000070	RING, E- 7	1	1	1					
24	1	22351-035040	PIN, SPRING 3.5X40	1	1	1					
25	1	22351-060040	PIN, SPRING 6.0X40	1	1	1					
26	1	22417-200200	PIN, COTTER 2.0X20	2	2	2					
27	1	24311-000340	O-RING, 1AP34.0	2	2	2					
28	1	24761-050000	NIPPLE, GREASE C	2	2	2					
29	1	26013-080162	BOLT, M8X 16	2	2	2					
30	1	26013-080162	BOLT, M8X 16	2	2	2					
31	1	26013-080202	BOLT, M8X 20	2	2	2					
32	1	26013-100202	BOLT, M10X 20	6	6	6					
33	1	26013-100202	BOLT, M10X 20	2	2	2					

N:Old $\overset{\text{Yes}}{\underset{\text{No}}{\leftrightarrow}}$ New, Q:Old $\overset{\text{No}}{\underset{\text{Yes}}{\leftrightarrow}}$ New, R:Old $\overset{\text{Yes}}{\underset{\text{Yes}}{\leftrightarrow}}$ New, S:Old $\overset{\text{No}}{\underset{\text{No}}{\leftrightarrow}}$ New, W:Add, Z:Discontinued, F:Interchangeable by set, K:Q'ty Change

Copyright (C) YANMAR CO., LTD. All RightsReserved.

Fig.29. CONTROL EQUIPMENT(TRAVEL LEVER)

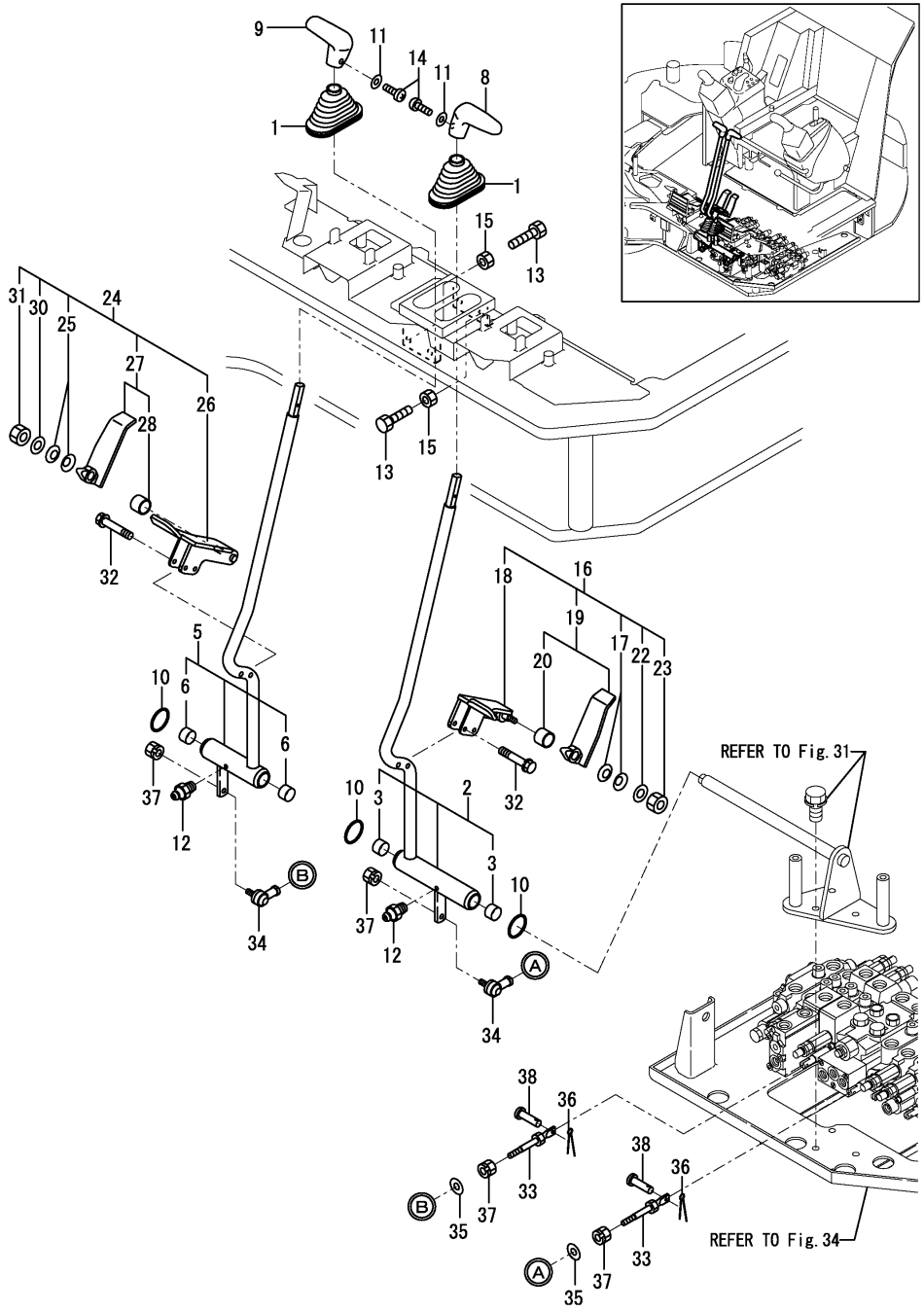

(A)=SV100(US) (D)=
(B)=SV100(AS) (E)=
(C)=SV100(NZ) (F)=

No.	Lev.	Parts No.	Description	Q'ty (A)	(B)	(C)	(D)	(E)	(F)	I	R
1	1	172141-41340	BOOTS	2	2	2					
2	1	172499-45100	LEVER L ,TRACK (72)	1	1	1					
2-1	1	172499-45100-1	LEVER L ,TRACK (49)	1	1	1				S	
	(A=M/#00758)	(B=M/#00758)	(C=M/#00758)								
3	2	172141-41370	BUSH 2015	2	2	2					
5	1	172499-45130	LEVER R ,TRACK (72)	1	1	1					
5-1	1	172499-45130-1	LEVER R ,TRACK (49)	1	1	1				S	
	(A=M/#00758)	(B=M/#00758)	(C=M/#00758)								
6	2	172141-41370	BUSH 2015	2	2	2					
8	1	172187-45870	GRIP, DRIVE	1	1	1					
9	1	172187-45880	GRIP, DRIVE	1	1	1					
10	1	172124-46200	O-RING	3	3	3					
11	1	22117-040000	WASHER, 4	2	2	2					
12	1	24761-020000	NIPPLE, GREASE PT1/8	2	2	2					
13	1	26116-100504	BOLT, M10X 50 PLATED	4	4	4					
14	1	26587-040122	SCREW, M4X12	2	2	2					
15	1	26716-100002	NUT, M10	4	4	4					
16	1	172A21-45300	PEDAL L, TRACK (72)	1	1	1					
16-1	1	172A21-45300-1	PEDAL L, TRACK (49)	1	1	1				S	
	(A=M/#00758)	(B=M/#00758)	(C=M/#00758)								
17	2	172068-28490	SPRING	2	2	2					
18	2	172A21-45310	PEDAL FL , TRACK(72)	1	1	1					
18-1	2	172A21-45310-1	PEDAL FL , TRACK(72)	1	1	1				S	
	(A=M/#00758)	(B=M/#00758)	(C=M/#00758)								
19	2	172472-45810	PEDAL RL,TRACK (72)	1	1	1					
19-1	2	172472-45810-1	PEDAL RL,TRACK (49)	1	1	1				S	
	(A=M/#00758)	(B=M/#00758)	(C=M/#00758)								
20	3	172110-45050	BUSH 12X12	1	1	1					
22	2	22137-080000	WASHER, 8	1	1	1					
23	2	26347-080002	NUT, M8	1	1	1					
24	1	172A21-45320	PEDAL R, TRACK (72)	1	1	1					
24-1	1	172A21-45320-1	PEDAL R, TRACK (49)	1	1	1				S	
	(A=M/#00758)	(B=M/#00758)	(C=M/#00758)								
25	2	172068-28490	SPRING	2	2	2					
26	2	172A21-45330	PEDAL FR , TRACK(72)	1	1	1					
26-1	2	172A21-45330-1	PEDAL FR , TRACK(49)	1	1	1				S	
	(A=M/#00758)	(B=M/#00758)	(C=M/#00758)								
27	2	172472-45850	PEDAL RR,TRACK (72)	1	1	1					
27-1	2	172472-45850-1	PEDAL RR,TRACK (49)	1	1	1				S	
	(A=M/#00758)	(B=M/#00758)	(C=M/#00758)								
28	3	172110-45050	BUSH 12X12	1	1	1					
30	2	22137-080000	WASHER, 8	1	1	1					
31	2	26347-080002	NUT, M8	1	1	1					
32	1	26013-060302	BOLT, M6X 30	4	4	4					
33	1	172164-46260	LOD 70	2	2	2					
34	1	172122-46590	ELBOW	2	2	2					
35	1	22137-080000	WASHER, 8	2	2	2					
36	1	22417-160160	PIN, COTTER 1.6X16	2	2	2					
37	1	26051-080002	NUT, M8	4	4	4					
38	1	933110-54100	PIN 4.75X14	2	2	2					

N:Old $\xleftarrow[\text{No}]{\text{Yes}}$ New, Q:Old $\xleftarrow[\text{Yes}]{\text{No}}$ New, R:Old $\xleftarrow[\text{Yes}]{\text{Yes}}$ New, S:Old $\xleftarrow[\text{No}]{\text{No}}$ New, W:Add, Z:Discontinued, F:Interchangeable by set, K:Q'ty Change

Copyright (C) YANMAR CO., LTD. All RightsReserved.

Fig.30. CONTROL EQUIPMENT(BLADE LEVER)

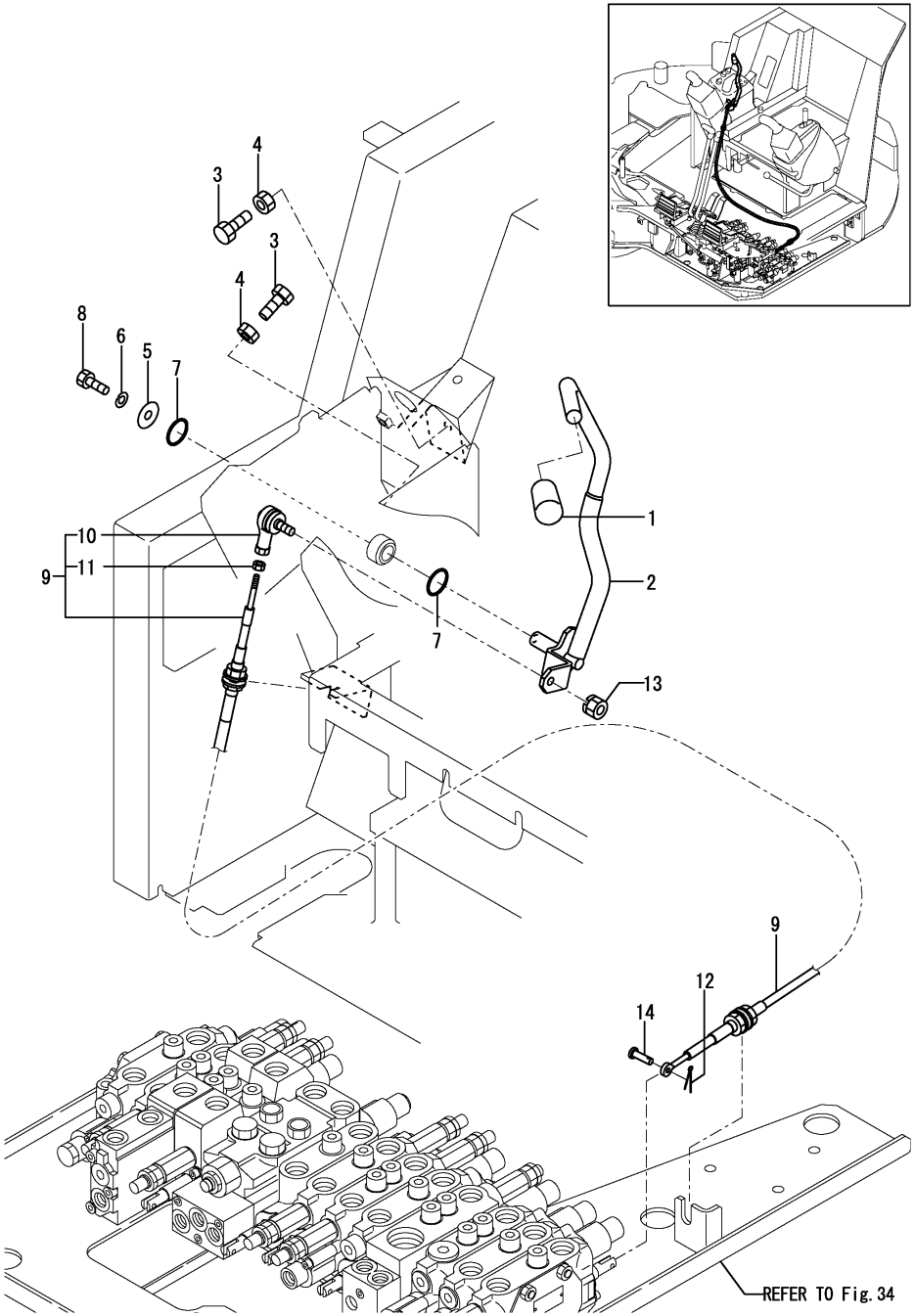

(A)=SV100(US) (D)=
(B)=SV100(AS) (E)=
(C)=SV100(NZ) (F)=

No.	Lev.	Parts No.	Description	Q'ty (A)	(B)	(C)	(D)	(E)	(F)	I	R
1	1	172964-12140	GRIP	1	1	1					
2	1	172478-45100	LEVER,BLADE(GRAY:72)	1	1	1					
2-1	1	172478-45100-1	LEVER,BLADE(GRAY:49)	1	1	1				S	
	(A=M/#00758)	(B=M/#00758)	(C=M/#00758)								
3	1	26116-100354	BOLT, M10X 35 PLATED	2	2	2					
4	1	26716-100002	NUT, M10	2	2	2					
5	1	1A1040-43900	WASHER, SPRING	1	1	1					
6	1	22217-080000	WASHER, SPRING 8	1	1	1					
7	1	24311-000210	O-RING, 1AP21.0	2	2	2					
8	1	26116-080202	BOLT, M8X 20 PLATED	1	1	1					
9	1	172455-45800	CABLE, BLADE	1	1	1					
10	2	172458-45810	JOINT, BALL	1	1	1					
11	2	26757-050002	NUT, LOCK M5	1	1	1					
12	1	22417-160160	PIN, COTTER 1.6X16	1	1	1					
13	1	26051-080002	NUT, M8	1	1	1					
14	1	933110-54100	PIN 4.75X14	1	1	1					

N:Old $\overset{\text{Yes}}{\underset{\text{No}}{\leftrightarrows}}$ New, Q:Old $\overset{\text{No}}{\underset{\text{Yes}}{\leftrightarrows}}$ New, R:Old $\overset{\text{Yes}}{\underset{\text{Yes}}{\leftrightarrows}}$ New, S:Old $\overset{\text{No}}{\underset{\text{No}}{\leftrightarrows}}$ New, W:Add, Z:Discontinued, F:Interchangeable by set, K:Q'ty Change

Copyright (C) YANMAR CO., LTD. All RightsReserved.

Fig.31. CONTROL EQUIPMENT(SWING PEDAL)

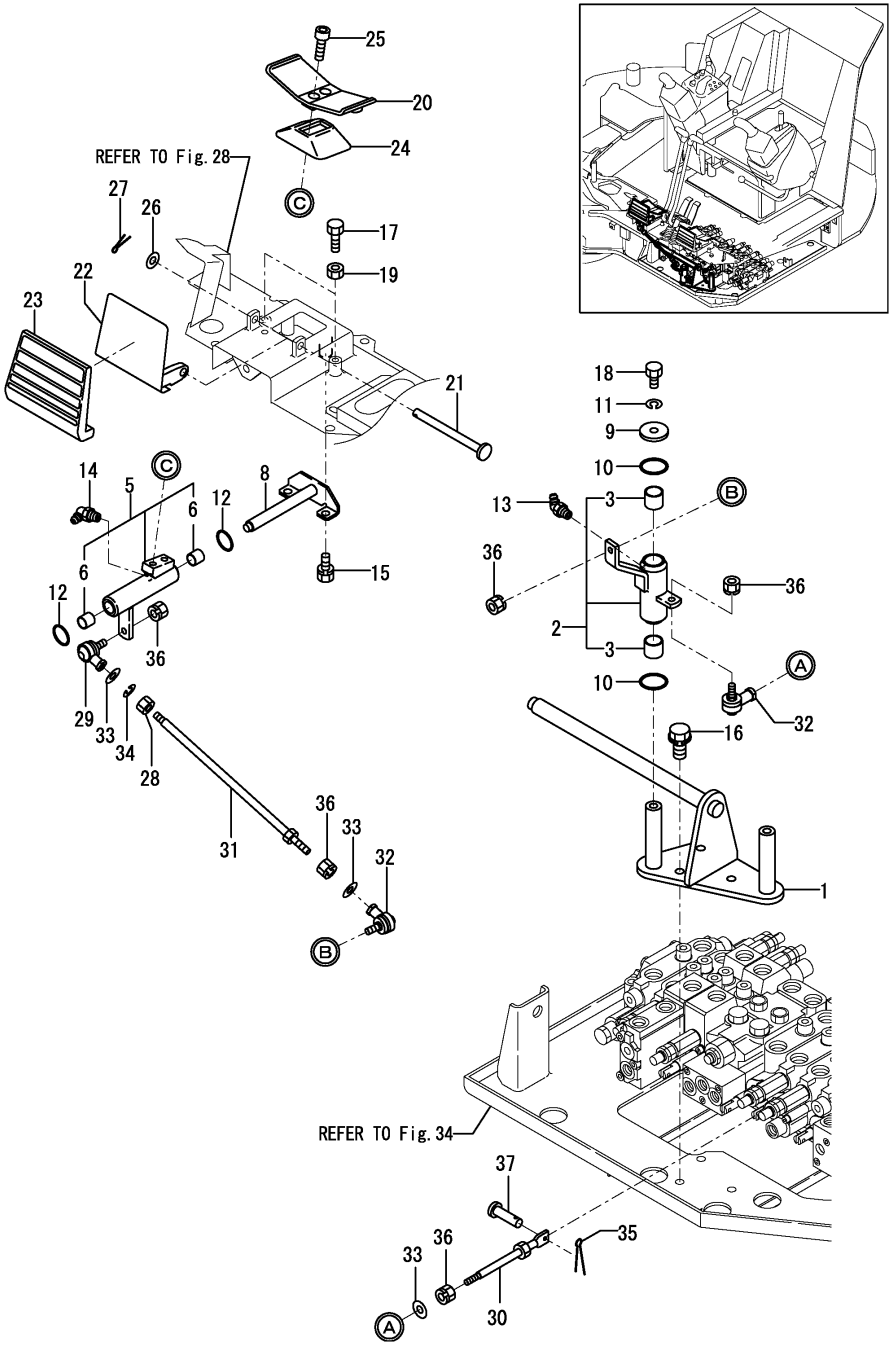

(A)=SV100(US) (D)=
(B)=SV100(AS) (E)=
(C)=SV100(NZ) (F)=

No.	Lev.	Parts No.	Description	Q'ty (A)	(B)	(C)	(D)	(E)	(F)	I	R
1	1	172499-45150	SHAFT, TRACK	1	1	1					
1-1	1	172499-45150-1	SHAFT, TRACK	1	1	1				S	
	(A=M/#00758)	(B=M/#00758)	(C=M/#00758)								
2	1	172499-45180	LINK ASSY,SWING (72)	1	1	1					
2-1	1	172499-45180-1	LINK ASSY,SWING (49)	1	1	1				S	
	(A=M/#00758)	(B=M/#00758)	(C=M/#00758)								
3	2	172141-41370	BUSH 2015	2	2	2					
5	1	172445-45550	LINK,PEDAL (GRAY:72)	1	1	1					
5-1	1	172445-45550-1	LINK,PEDAL (GRAY:49)	1	1	1				S	
	(A=M/#00758)	(B=M/#00758)	(C=M/#00758)								
6	2	172141-41360	BUSH 1415	2	2	2					
8	1	172444-45850	SHAFT ASSY	1	1	1					
8-1	1	172444-45850-1	SHAFT ASSY	1	1	1				S	
	(A=M/#00758)	(B=M/#00758)	(C=M/#00758)								
9	1	1A1040-45890	WASHER, 10X36X4.5	1	1	1					
10	1	172124-46200	O-RING	2	2	2					
11	1	22217-100000	WASHER, SPRING 10	1	1	1					
12	1	24311-000210	O-RING, 1AP21.0	2	2	2					
13	1	24761-040000	NIPPLE, GREASE B	1	1	1					
14	1	24761-050000	NIPPLE, GREASE C	1	1	1					
15	1	26013-080162	BOLT, M8X 16	2	2	2					
16	1	26013-100252	BOLT, M10X 25	3	3	3					
17	1	26116-080254	BOLT, M8X 25 PLATED	2	2	2					
18	1	26116-100202	BOLT, M10X 20 PLATED	1	1	1					
19	1	26716-080002	NUT, M8	2	2	2					
20	1	172187-45500-4	PEDAL,SWING(GRAY:72)	1	1	1					
20-1	1	172187-45500-2	PEDAL,SWING(GRAY:49)	1	1	1				S	
	(A=M/#00758)	(B=M/#00758)	(C=M/#00758)								
21	1	172187-45651	SHAFT	1	1	1					
22	1	172187-45720-4	COVER, PEDAL	1	1	1					
22-1	1	172187-45720-2	COVER, PEDAL	1	1	1				S	
	(A=M/#00758)	(B=M/#00758)	(C=M/#00758)								
23	1	172187-45760	COVER PAD	1	1	1					
24	1	172157-45990	BOOTS, PEDAL	1	1	1					
25	1	172165-46340	BOLT	2	2	2					
26	1	22137-100000	WASHER, 10	1	1	1					
27	1	22417-250200	PIN, COTTER 2.5X20	1	1	1					
28	1	194200-37780	NUT, M8	1	1	1					
29	1	172734-41300	JOINT, BALL	1	1	1					
30	1	172164-45230	ROD 135 ASSY	1	1	1					
31	1	172168-45880	ROD 230	1	1	1					
32	1	172122-46590	ELBOW	2	2	2					
33	1	22137-080000	WASHER, 8	3	3	3					
34	1	22217-080000	WASHER, SPRING 8	1	1	1					
35	1	22417-160160	PIN, COTTER 1.6X16	1	1	1					
36	1	26051-080002	NUT, M8	5	5	5					
37	1	933110-54100	PIN 4.75X14	1	1	1					

N:Old $\overset{\text{Yes}}{\underset{\text{No}}{\leftrightarrow}}$ New, Q:Old $\overset{\text{No}}{\underset{\text{Yes}}{\leftrightarrow}}$ New, R:Old $\overset{\text{Yes}}{\underset{\text{Yes}}{\leftrightarrow}}$ New, S:Old $\overset{\text{No}}{\underset{\text{No}}{\leftrightarrow}}$ New, W:Add, Z:Discontinued, F:Interchangeable by set, K:Q'ty Change

Copyright (C) YANMAR CO., LTD. All RightsReserved.

Fig.32. CONTROL EQUIPMENT(LOW-HIGH PEDAL)

(A)=SV100(US) (D)=
(B)=SV100(AS) (E)=
(C)=SV100(NZ) (F)=

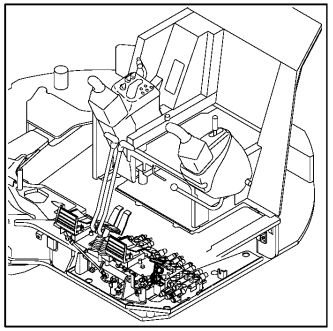

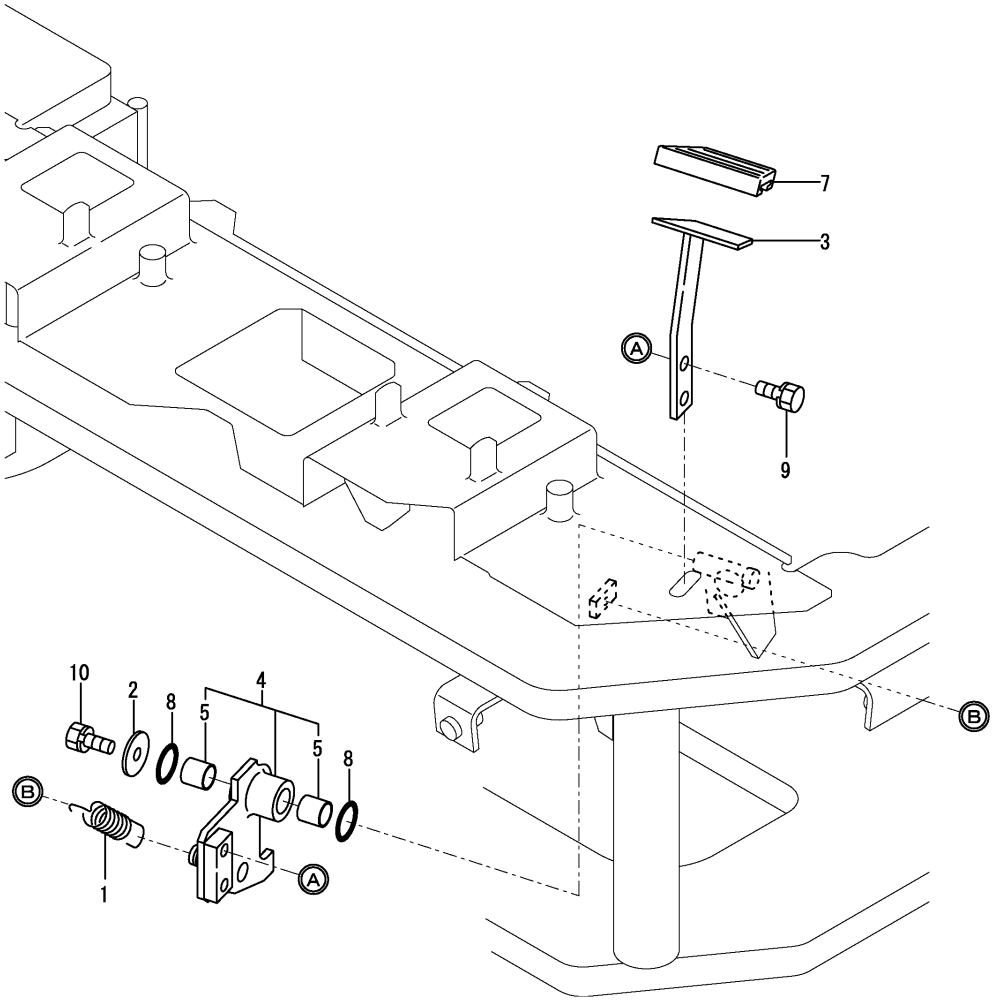

No.	Lev.	Parts No.	Description	Q'ty (A)	(B)	(C)	(D)	(E)	(F)	I	R
1	1	172162-12480	SPRING, RETURN	1	1	1					
2	1	1A1040-43900	WASHER, SPRING	1	1	1					
3	1	172487-45900	PEDAL,LO-HI(GRAY:72)	1	1	1					
3-1	1	172487-45900-1	PEDAL,LO-HI(GRAY:49)	1	1	1				S	
	(A=M/#00758)	(B=M/#00758)	(C=M/#00758)								
4	1	172458-45920	BRACKET,PEDAL(GRAY72	1	1	1					
4-1	1	172458-45920-1	BRACKET,PEDAL(GRAY49	1	1	1				S	
	(A=M/#00758)	(B=M/#00758)	(C=M/#00758)								
5	2	172141-41360	BUSH 1415	2	2	2					
7	1	172458-45950	PAD,PEDAL	1	1	1					
8	1	24311-000210	O-RING, 1AP21.0	2	2	2					
9	1	26013-080162	BOLT, M8X 16	2	2	2					
10	1	26013-080202	BOLT, M8X 20	1	1	1					

N:Old $\overset{\text{Yes}}{\underset{\text{No}}{\leftrightarrows}}$ New, Q:Old $\overset{\text{No}}{\underset{\text{Yes}}{\leftrightarrows}}$ New, R:Old $\overset{\text{Yes}}{\underset{\text{Yes}}{\leftrightarrows}}$ New, S:Old $\overset{\text{No}}{\underset{\text{No}}{\leftrightarrows}}$ New, W:Add, Z:Discontinued, F:Interchangeable by set, K:Q'ty Change

Copyright (C) YANMAR CO., LTD. All RightsReserved.

Fig.33. CONTROL EQUIPMENT(P.T.O. PEDAL)

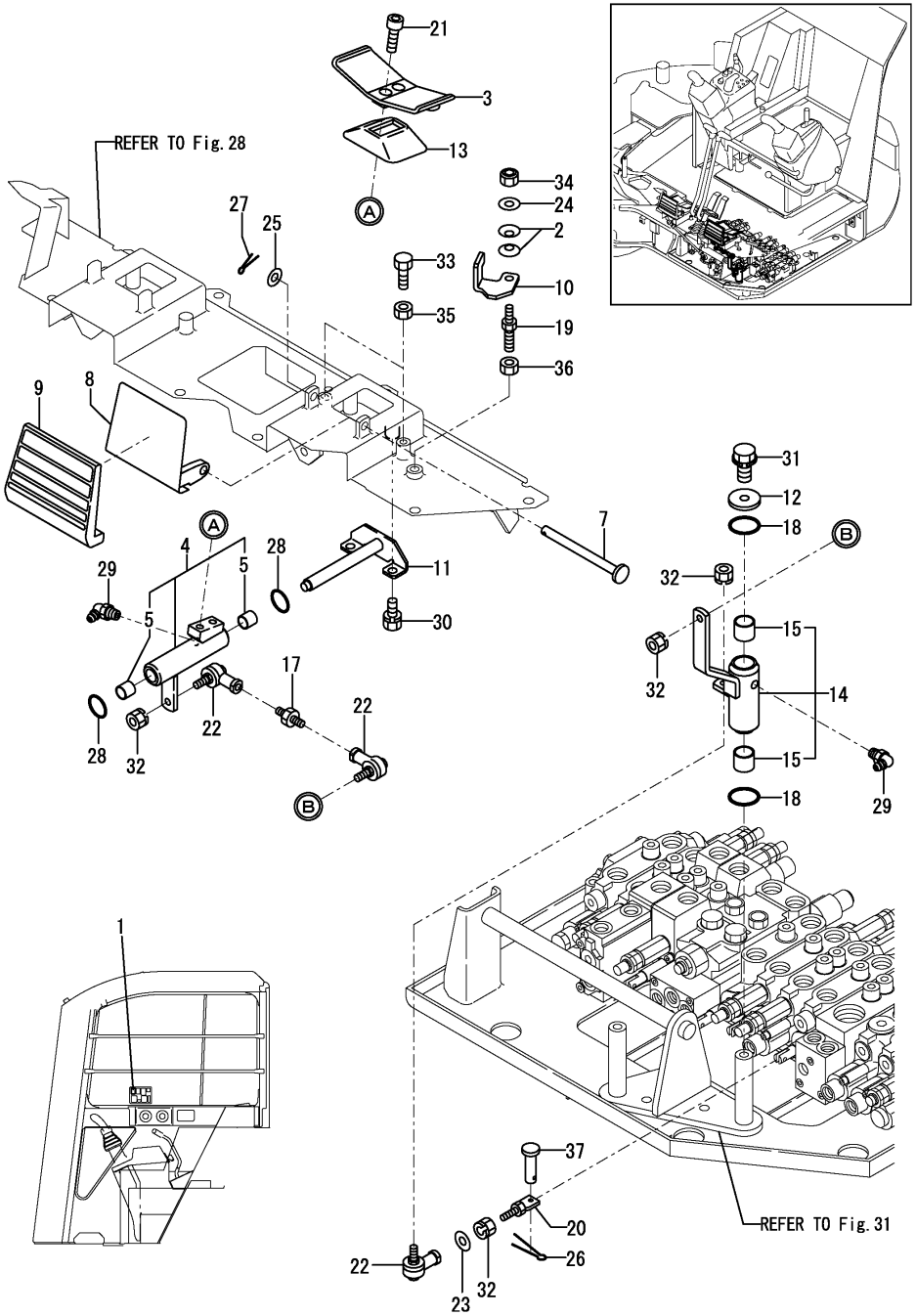

(A)=SV100(US) (D)=
(B)=SV100(AS) (E)=
(C)=SV100(NZ) (F)=

No.	Lev.	Parts No.	Description	Q'ty (A)	(B)	(C)	(D)	(E)	(F)	I	R
1	1	172496-03260	LABEL, P.T.O.	1	1	1					
2	1	172068-28490	SPRING	2	2	2					
3	1	172187-45500-4	PEDAL,SWING(GRAY:72)	1	1	1					
3-1	1	172187-45500-2	PEDAL,SWING(GRAY:49)	1	1	1				S	
	(A=M/#00758)	(B=M/#00758)	(C=M/#00758)								
4	1	172445-45550	LINK,PEDAL (GRAY:72)	1	1	1					
4-1	1	172445-45550-1	LINK,PEDAL (GRAY:49)	1	1	1				S	
	(A=M/#00758)	(B=M/#00758)	(C=M/#00758)								
5	2	172141-41360	BUSH 1415	2	2	2					
7	1	172187-45651	SHAFT	1	1	1					
8	1	172187-45720-4	COVER, PEDAL	1	1	1					
8-1	1	172187-45720-2	COVER, PEDAL	1	1	1				S	
	(A=M/#00758)	(B=M/#00758)	(C=M/#00758)								
9	1	172187-45760	COVER PAD	1	1	1					
10	1	172448-45800-2	PLATE,LOCK(PTO (50)	1	1	1					
11	1	172444-45850	SHAFT ASSY	1	1	1					
11-1	1	172444-45850-1	SHAFT ASSY	1	1	1				S	
	(A=M/#00758)	(B=M/#00758)	(C=M/#00758)								
12	1	1A1040-45890	WASHER, 10X36X4.5	1	1	1					
13	1	172157-45990	BOOTS, PEDAL	1	1	1					
14	1	172499-46100	LINK ASSY,PTO	1	1	1					
15	2	172141-41370	BUSH 2015	2	2	2					
17	1	172499-46150	ROD M8	1	1	1					
18	1	172124-46200	O-RING	2	2	2					
19	1	172462-46230	BOLT 8X10	1	1	1					
20	1	172164-46260	LOD 70	1	1	1					
21	1	172165-46340	BOLT	2	2	2					
22	1	172122-46590	ELBOW	3	3	3					
23	1	22137-080000	WASHER, 8	1	1	1					
24	1	22137-080000	WASHER, 8	1	1	1					
25	1	22137-100000	WASHER, 10	1	1	1					
26	1	22417-160160	PIN, COTTER 1.6X16	1	1	1					
27	1	22417-250200	PIN, COTTER 2.5X20	1	1	1					
28	1	24311-000210	O-RING, 1AP21.0	2	2	2					
29	1	24761-050000	NIPPLE, GREASE C	2	2	2					
30	1	26013-080162	BOLT, M8X 16	2	2	2					
31	1	26013-100202	BOLT, M10X 20	1	1	1					
32	1	26051-080002	NUT, M8	4	4	4					
33	1	26116-080254	BOLT, M8X 25 PLATED	2	2	2					
34	1	26347-080002	NUT, M8	1	1	1					
35	1	26716-080002	NUT, M8	2	2	2					
36	1	26716-100002	NUT, M10	1	1	1					
37	1	933110-54100	PIN 4.75X14	1	1	1					

N:Old $\frac{\text{Yes}}{\text{No}}$ New, Q:Old $\frac{\text{No}}{\text{Yes}}$ New, R:Old $\frac{\text{Yes}}{\text{Yes}}$ New, S:Old $\frac{\text{No}}{\text{No}}$ New, W:Add, Z:Discontinued, F:Interchangeable by set, K:Q'ty Change

Copyright (C) YANMAR CO., LTD. All RightsReserved.

Fig.34. CONTROL VALVE PLATE

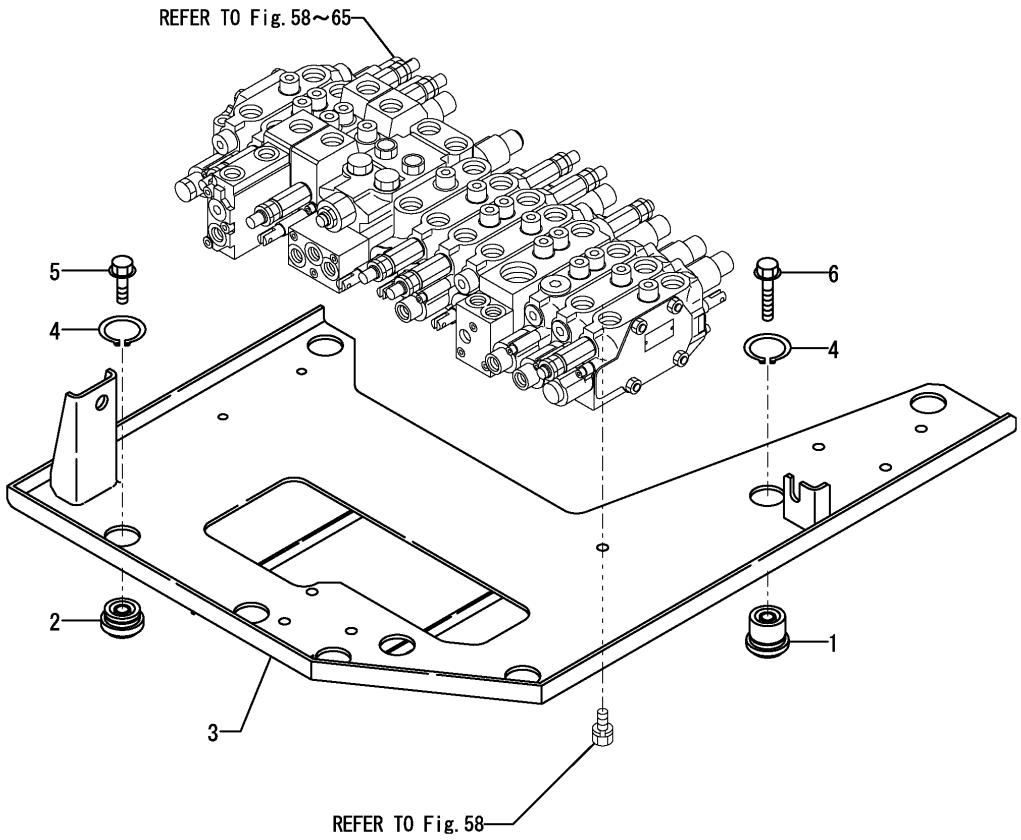

(A)=SV100(US) (D)=
(B)=SV100(AS) (E)=
(C)=SV100(NZ) (F)=

No.	Lev.	Parts No.	Description	Q'ty (A)	(B)	(C)	(D)	(E)	(F)	I	R
1	1	172187-45060	CUSHION ASSY	2	2	2					
2	1	172187-45490	CUSHION ASSY	4	4	4					
3	1	172499-45600	PLATE ASSY,VALVE	1	1	1					
4	1	22242-000350	RING, 35	6	6	6					
5	1	26106-100352	BOLT, M10X 35 PLATED	4	4	4					
6	1	26106-100552	BOLT, M10X 55 PLATED	2	2	2					

N:Old $\frac{\text{Yes}}{\text{No}}$ New, Q:Old $\frac{\text{No}}{\text{Yes}}$ New, R:Old $\frac{\text{Yes}}{\text{Yes}}$ New, S:Old $\frac{\text{No}}{\text{No}}$ New, W:Add, Z:Discontinued, F:Interchangeable by set, K:Q'ty Change

Copyright (C) YANMAR CO., LTD. All RightsReserved.

Fig.35. TRACK FRAME

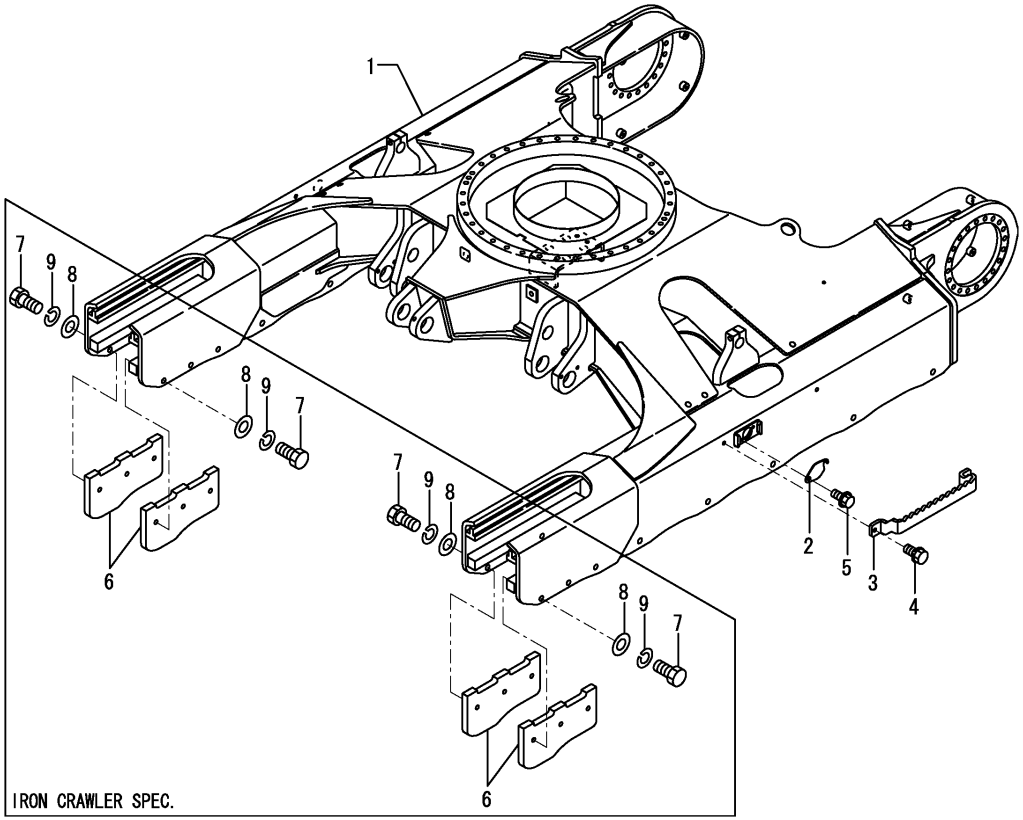

(A)=SV100(US) (D)=
(B)=SV100(AS) (E)=
(C)=SV100(NZ) (F)=

No.	Lev.	Parts No.	Description	Q'ty (A)	(B)	(C)	(D)	(E)	(F)	I	R
1	1	172499-50100	FRAME ASSY LOWER(82)	1	1	1					
1-1	1	172499-50100-1	FRAME ASSY LOWER(49)	1	1	1				S	
	(A=M/#00758)	(B=M/#00758)	(C=M/#00758)								
2	1	172458-50480-1	COVER, FRAME	2	2	2					
2-1	1	172458-50480-2	COVER, FRAME	2	2	2				S	
	(A=M/#00758)	(B=M/#00758)	(C=M/#00758)								
3	1	172499-50740	STEP	2	2	2					
3-1	1	172499-50740-1	STEP	2	2	2				S	
	(A=M/#00758)	(B=M/#00758)	(C=M/#00758)								
4	1	26013-120352	BOLT, M12X 35	4	4	4					
5	1	26106-100122	BOLT, M10X 12 PLATED	4	4	4					
6	1	172499-50800	GUARD, CRAWLER	4	4	4					1
6-1	1	172499-50800-1	GUARD, CRAWLER	4	4	4				S	1
	(A=M/#00758)	(B=M/#00758)	(C=M/#00758)								
7	1	172460-73320	BOLT	12	12	12					1
8	1	22137-160000	WASHER, 16	12	12	12					1
9	1	22217-160000	WASHER, SPRING 16	12	12	12					1

Remarks
(1)IRON CRAWLER SPEC.

N:Old $\frac{\text{Yes}}{\text{No}}$ New, Q:Old $\frac{\text{No}}{\text{Yes}}$ New, R:Old $\frac{\text{Yes}}{\text{Yes}}$ New, S:Old $\frac{\text{No}}{\text{No}}$ New, W:Add, Z:Discontinued, F:Interchangeable by set, K:Q'ty Change

Copyright (C) YANMAR CO., LTD. All RightsReserved.

Fig.36. TURNING FRAME & TURNING BEARING

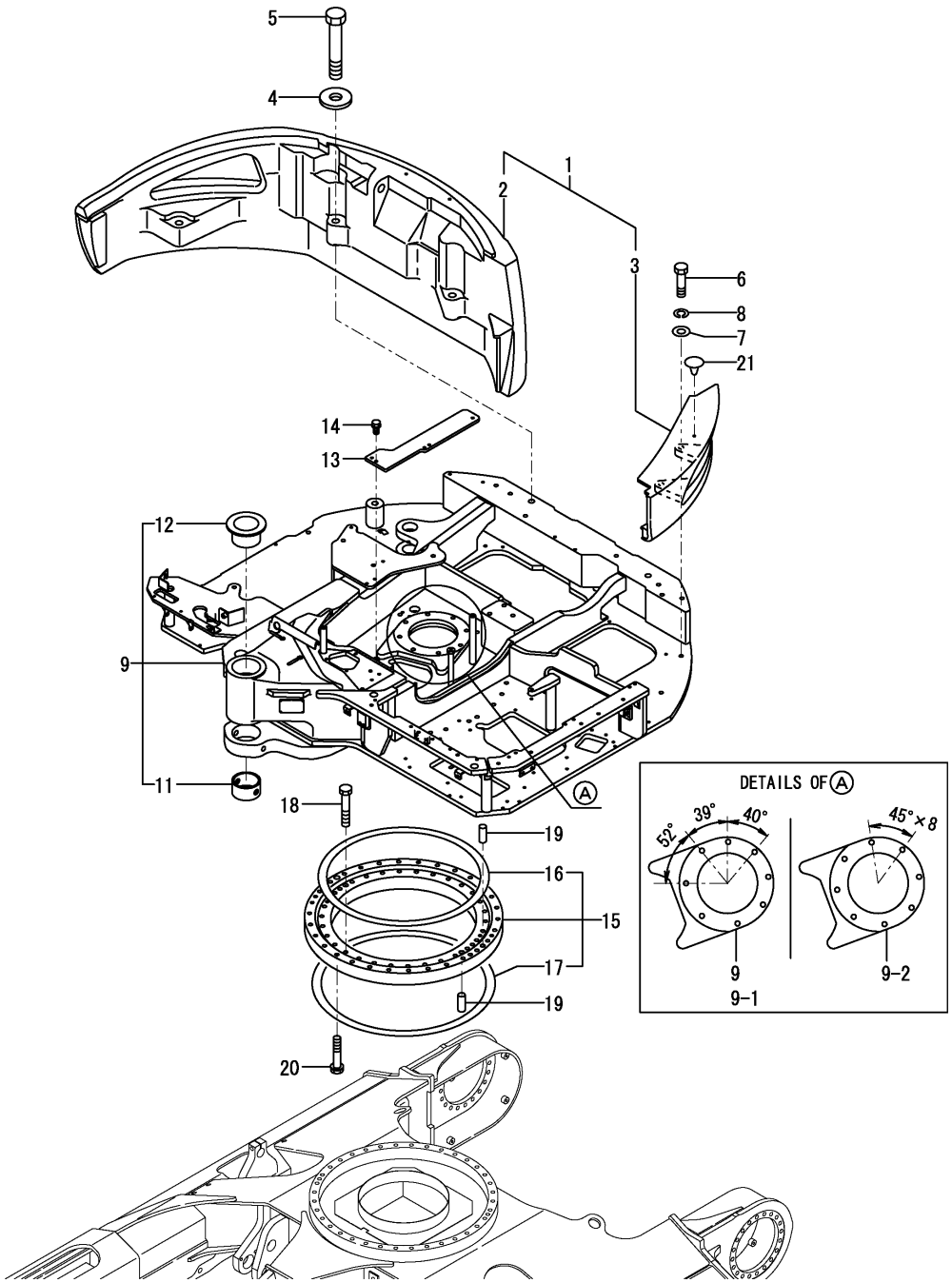

(A)=SV100(US) (D)=
(B)=SV100(AS) (E)=
(C)=SV100(NZ) (F)=

No.	Lev.	Parts No.	Description	Q'ty (A)	(B)	(C)	(D)	(E)	(F)	I	R
1	1	172499-53200	WEIGHT SET	1	1	1					
1-1	1	172499-53200-1	WEIGHT SET	1	1	1				S	
	(A=M/#00758)	(B=M/#00758)	(C=M/#00758)								
2	2	172499-53300	WEIGHT, COUNTER	1	1	1					
2-1	2	172499-53300-1	WEIGHT, COUNTER	1	1	1				S	
	(A=M/#00758)	(B=M/#00758)	(C=M/#00758)								
3	2	172499-53310	WEIGHT, SIDE	1	1	1					
3-1	2	172499-53310-1	WEIGHT, SIDE	1	1	1				S	
	(A=M/#00758)	(B=M/#00758)	(C=M/#00758)								
4	1	172187-53320	WASHER 24.5X65X8	3	3	3					
4-1	1	172187-53321	WASHER 24.5X65X8	3	3	3				N	
	(A=M/#00886)	(B=M/#00886)	(C=M/#00886)								
5	1	172455-53330	BOLT 24X140	3	3	3					
5-1	1	172455-53331	BOLT 24X140	3	3	3				N	
	(A=M/#00886)	(B=M/#00886)	(C=M/#00886)								
6	1	172165-53480	BOLT M16X 60	2	2	2					
7	1	172165-53500	WASHER	2	2	2					
8	1	22217-160000	WASHER, SPRING 16	2	2	2					
9	1	172499-54100	FRAME ,TURNING (86)	1	1	1					
9-1	1	172499-54100-1	FRAME ,TURNING (49)	1	1	1				S	
	(A=M/#00758)	(B=M/#00758)	(C=M/#00758)								
9-2	1	172499-54101	FRAME ,TURNING (49)	1	1	1				S	
	(A=M/#01170)	(B=M/#01170)	(C=M/#01170)								
11	2	172499-54500	BUSH	1	1	1					
12	2	172499-54510	BUSH 100X80	1	1	1					
13	1	172478-54450-2	PLATE (GREEN:82)	1	1	1					
13-1	1	172478-54450-3	PLATE (GRAY:49)	1	1	1				S	
	(A=M/#00758)	(B=M/#00758)	(C=M/#00758)								
14	1	26013-100252	BOLT, M10X 25	2	2	2					
15	1	172499-57600	BEARING ASSY,SWING	1	1	1					
16	2	172499-57620	SEAL	1	1	1					
17	2	172499-57630	SEAL	1	1	1					
18	1	172455-57650	BOLT 16X90	36	36	36					
19	1	172162-57660	PIN 16X40,STRAIGHT	4	4	4					
20	1	172455-57661	BOLT 16X80	34	34	34					
21	1	172122-17190	CLIP, TREE	1	1	1					

N:Old $\overset{\text{Yes}}{\underset{\text{No}}{\leftrightarrow}}$ New, Q:Old $\overset{\text{No}}{\underset{\text{Yes}}{\leftrightarrow}}$ New, R:Old $\overset{\text{Yes}}{\underset{\text{Yes}}{\leftrightarrow}}$ New, S:Old $\overset{\text{No}}{\underset{\text{No}}{\leftrightarrow}}$ New, W:Add, Z:Discontinued, F:Interchangeable by set, K:Q'ty Change

Copyright (C) YANMAR CO., LTD. All RightsReserved.

Fig.37. COVER(TURNING FRAME : UPPER)

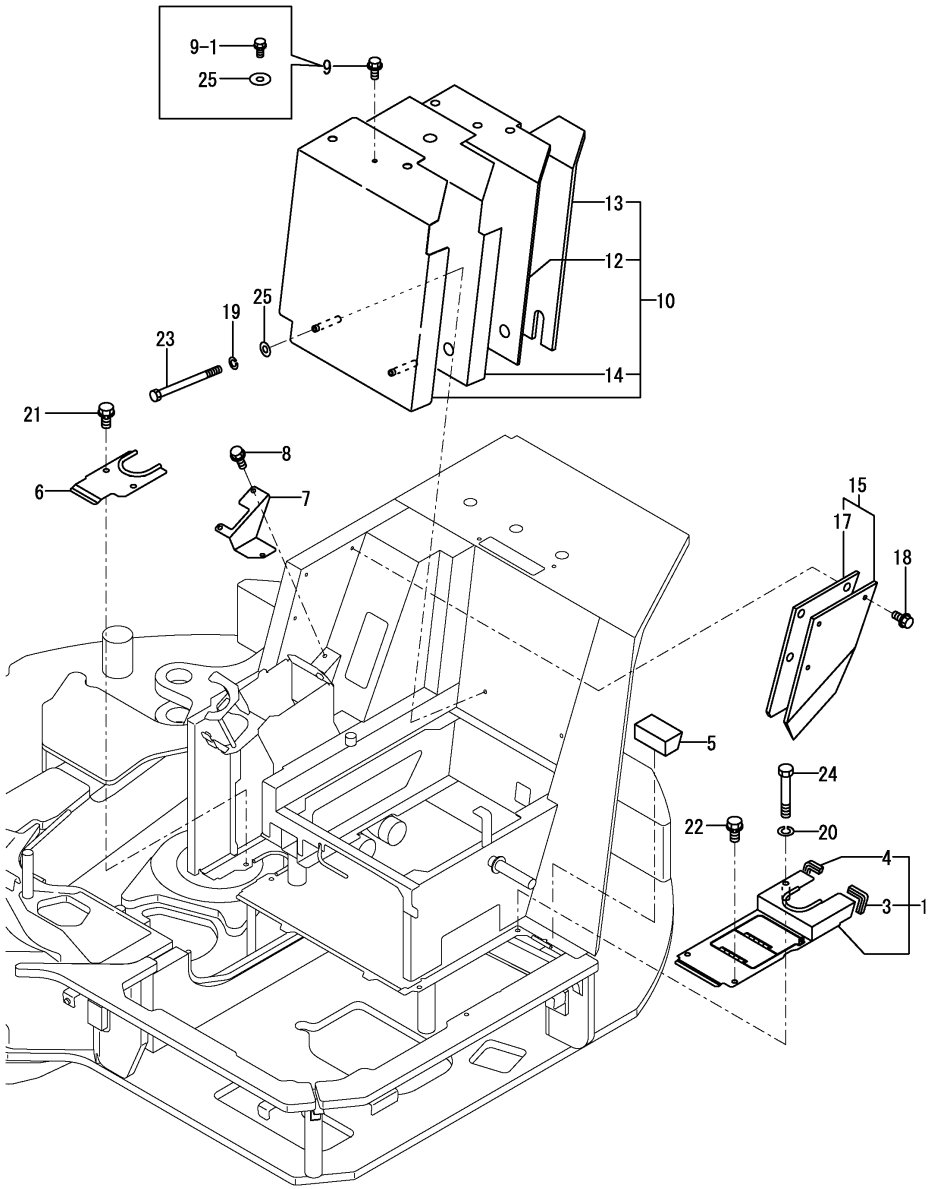

(A)=SV100(US) (D)=
(B)=SV100(AS) (E)=
(C)=SV100(NZ) (F)=

No.	Lev.	Parts No.	Description	Q'ty (A)	(B)	(C)	(D)	(E)	(F)	I	R
1	1	172478-61200	COVER, MULTI	1	1	1					
1-1	1	172478-61200-1	COVER, MULTI	1	1	1				S	
	(A=M/#00758)	(B=M/#00758)	(C=M/#00758)								
3	2	172183-61350	TRIM	1	1	1					
4	2	172183-61360	TRIM	1	1	1					
5	1	172478-61270	SEAL, SPONGE	1	1	1					
6	1	172455-61280-1	COVER ASSY, SEAT	1	1	1					
6-1	1	172455-61280-2	COVER ASSY, SEAT	1	1	1				S	
	(A=M/#00758)	(B=M/#00758)	(C=M/#00758)								
7	1	172455-61520-1	COVER, BLADE	1	1	1					
7-1	1	172455-61520-2	COVER, BLADE	1	1	1				S	
	(A=M/#00758)	(B=M/#00758)	(C=M/#00758)								
8	1	172519-63240	BOLT	3	3	3					
9	1	172519-63240	BOLT	1	1	1					
9-1	1	26013-080202	BOLT, M8X 20	1	1	1				N	
	(A=M/#00719)	(B=M/#00719)	(C=M/#00719)								
10	1	172499-63300	COVER ASSY, MOUNT	1	1	1					
10-1	1	172499-63301	COVER ASSY, MOUNT	1	1	1				N	
	(A=M/#00719)	(B=M/#00719)	(C=M/#00719)								
10-2	1	172499-63301-1	COVER ASSY, MOUNT	1	1	1				S	
	(A=M/#00758)	(B=M/#00758)	(C=M/#00758)								
12	2	172499-63330	SPONGE	1	1	1					
13	2	172499-63340	SPONGE	1	1	1					
14	2	172499-63350	TRIM, COVER	1	1	1					
15	1	172455-63440	COVER ASSY	1	1	1					1
15-1	1	172455-63440-1	COVER ASSY	1	1	1				S	1
	(A=M/#00758)	(B=M/#00758)	(C=M/#00758)								
17	2	172455-63480	SPONGE	1	1	1					
18	1	172165-66980	BOLT	3	3	3					
19	1	22217-080000	WASHER, SPRING 8	2	2	2					
20	1	22217-100000	WASHER, SPRING 10	1	1	1					
21	1	26013-100202	BOLT, M10X 20	2	2	2					
22	1	26013-100202	BOLT, M10X 20	2	2	2					
23	1	26116-080952	BOLT, M8X 95 PLATED	2	2	2					
23-1	1	26116-081002	BOLT, M8X100 PLATED	2	2	2				N	
	(A=M/#00719)	(B=M/#00719)	(C=M/#00719)								
24	1	26116-100602	BOLT, M10X 60 PLATED	1	1	1					
25	1	22157-080000	WASHER, 8	3	3	3				W	
	(A=M/#00719)	(B=M/#00719)	(C=M/#00719)								
26A	1	172437-03432	LABEL, STEERING US	1	1	1					2
26B	1	172437-03471	LABEL, LEVER LOCK US	1	1	1					2

Remarks
(1)PLEASE USE THIS PART WITH FOLLOWING LABEL AT THE SAME TIME.
REF NO.26A & 26B.
(2)LABEL ARE NOT ILLUSTRATED.

N:Old $\frac{\text{Yes}}{\text{No}}$ New, Q:Old $\frac{\text{No}}{\text{Yes}}$ New, R:Old $\frac{\text{Yes}}{\text{Yes}}$ New, S:Old $\frac{\text{No}}{\text{No}}$ New, W:Add, Z:Discontinued, F:Interchangeable by set, K:Q'ty Change

Copyright (C) YANMAR CO., LTD. All RightsReserved.

Fig.38. COVER(TURNING FRAME : SIDE, UNDER)

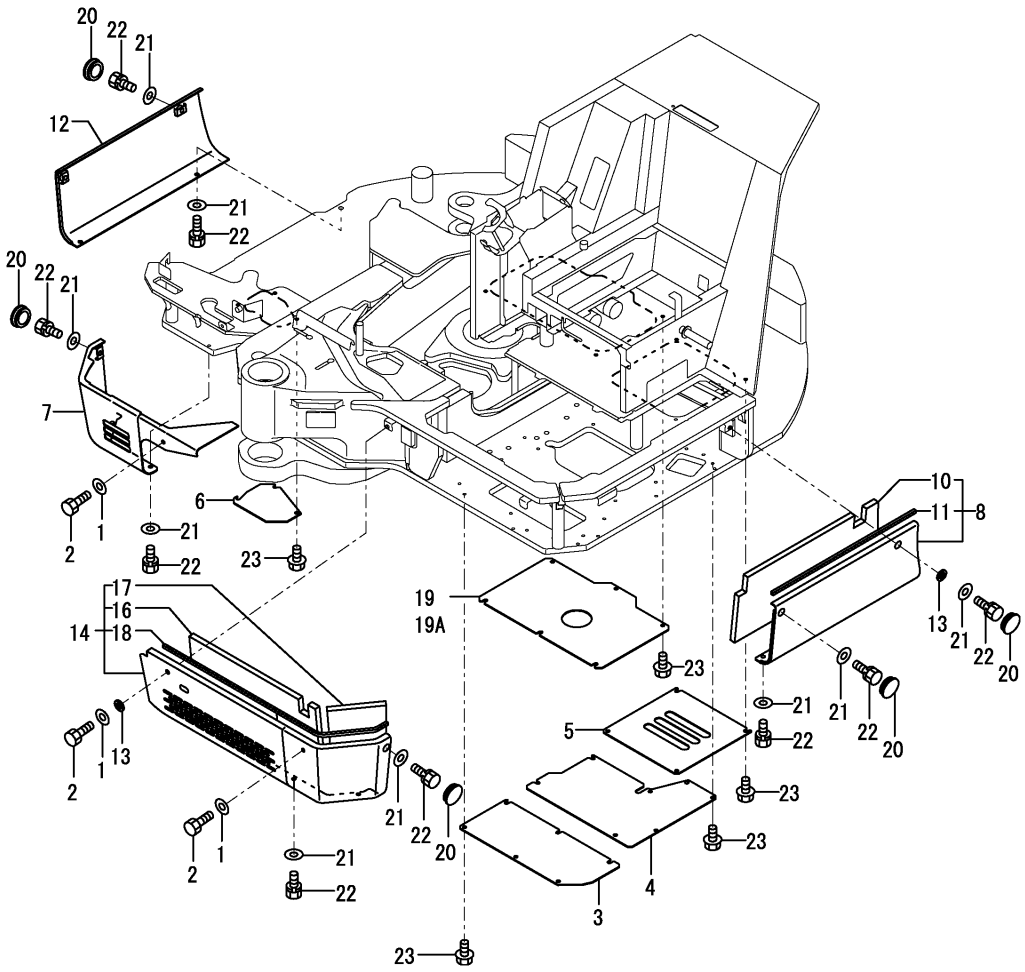

(A)=SV100(US) (D)=
(B)=SV100(AS) (E)=
(C)=SV100(NZ) (F)=

No.	Lev.	Parts No.	Description	Q'ty (A)	(B)	(C)	(D)	(E)	(F)	I	R
1	1	172137-46040	SEAT, SPRING	3	3	3					
1-1	1	172137-46041	SEAT, SPRING	3	3	3				N	
	(A=M/#00978)	(B=M/#00978)	(C=M/#00978)								
1-2	1	172137-46042	SEAT, SPRING	3	3	3				N	
	(A=M/#01011)	(B=M/#01011)	(C=M/#01011)								
2	1	172168-46760	BOLT M10X20	3	3	3					
3	1	172455-61100-2	COVER	1	1	1					
3-1	1	172455-61100-3	COVER	1	1	1				S	
	(A=M/#00758)	(B=M/#00758)	(C=M/#00758)								
4	1	172478-61111-1	COVER	1	1	1					
4-1	1	172478-61111-2	COVER	1	1	1				S	
	(A=M/#00758)	(B=M/#00758)	(C=M/#00758)								
5	1	172455-61120-2	COVER	1	1	1					
5-1	1	172455-61120-3	COVER	1	1	1				S	
	(A=M/#00758)	(B=M/#00758)	(C=M/#00758)								
6	1	172455-61130-2	COVER	1	1	1					
6-1	1	172455-61130-3	COVER	1	1	1				S	
	(A=M/#00758)	(B=M/#00758)	(C=M/#00758)								
7	1	172499-61200	COVER	1	1	1					
7-1	1	172499-61200-1	COVER	1	1	1				S	
	(A=M/#00758)	(B=M/#00758)	(C=M/#00758)								
8	1	172478-61351-1	COVER, FRAME	1	1	1					1
8-1	1	172478-61351-2	COVER, FRAME	1	1	1				S	1
	(A=M/#00758)	(B=M/#00758)	(C=M/#00758)								
10	2	172478-61360	SPONGE	1	1	1					
11	2	172478-68910	SEAL	1	1	1					
12	1	172455-61370-1	COVER, FRAME	1	1	1					2
12-1	1	172455-61370-2	COVER, FRAME	1	1	1				S	2
	(A=M/#00758)	(B=M/#00758)	(C=M/#00758)								
13	1	172478-61390	RUBBER	2	2	2					
14	1	172478-61401-1	COVER, FRAME	1	1	1					
14-1	1	172478-61401-2	COVER, FRAME	1	1	1				S	
	(A=M/#00758)	(B=M/#00758)	(C=M/#00758)								
16	2	172478-61500	SPONGE	1	1	1					
17	2	172478-61510	SPONGE	1	1	1					
18	2	172478-68920	SEAL	1	1	1					
19	1	172478-61560-1	PLATE (GREEN:86)	1	1	1					
19-1	1	172478-61560-2	BLADE (GRAY:49)	1	1	1				S	
	(A=M/#00758)	(B=M/#00758)	(C=M/#00758)								
19A	1	172455-61550-2	COVER, OIL SUMP	1	1	1				W	4
	(A=M/#01521)	(B=M/#01521)	(C=M/#01521)								
20	1	172463-61600	PLUG 28X3.2	6	6	6					
20-1	1	172A21-61600	PLUG 28X3.2	6	6	6				S	
	(A=M/#00758)	(B=M/#00758)	(C=M/#00758)								
21	1	22137-100000	WASHER, 10	15	15	15					
22	1	26013-100202	BOLT, M10X 20	15	15	15					
23	1	26106-100162	BOLT, M10X 16 PLATED	26	26	26					
24A	1	172472-03141	LABEL, SUPPORT US	1	1	1					3
24B	1	172437-03352	LABEL, GREASE CYL.	1	1	1					3
25A	1	172437-03352	LABEL, GREASE CYL.	1	1	1					3

Remarks
(1)PLEASE USE THIS PART WITH FOLLOWING LABEL AT THE SAME TIME.
REF NO.24A & 24B.
(2)PLEASE USE THIS PART WITH FOLLOWING LABEL AT THE SAME TIME.
REF NO.25A.
(3)LABEL ARE NOT ILLUSTRATED.
(4)INDIA SPEC.

N:Old $\overset{\text{Yes}}{\underset{\text{No}}{\leftrightarrows}}$ New, Q:Old $\overset{\text{No}}{\underset{\text{Yes}}{\leftrightarrows}}$ New, R:Old $\overset{\text{Yes}}{\underset{\text{Yes}}{\leftrightarrows}}$ New, S:Old $\overset{\text{No}}{\underset{\text{No}}{\leftrightarrows}}$ New, W:Add, Z:Discontinued, F:Interchangeable by set, K:Q'ty Change

Copyright (C) YANMAR CO., LTD. All RightsReserved.

Fig.39. COVER(TRAVEL FRAME)

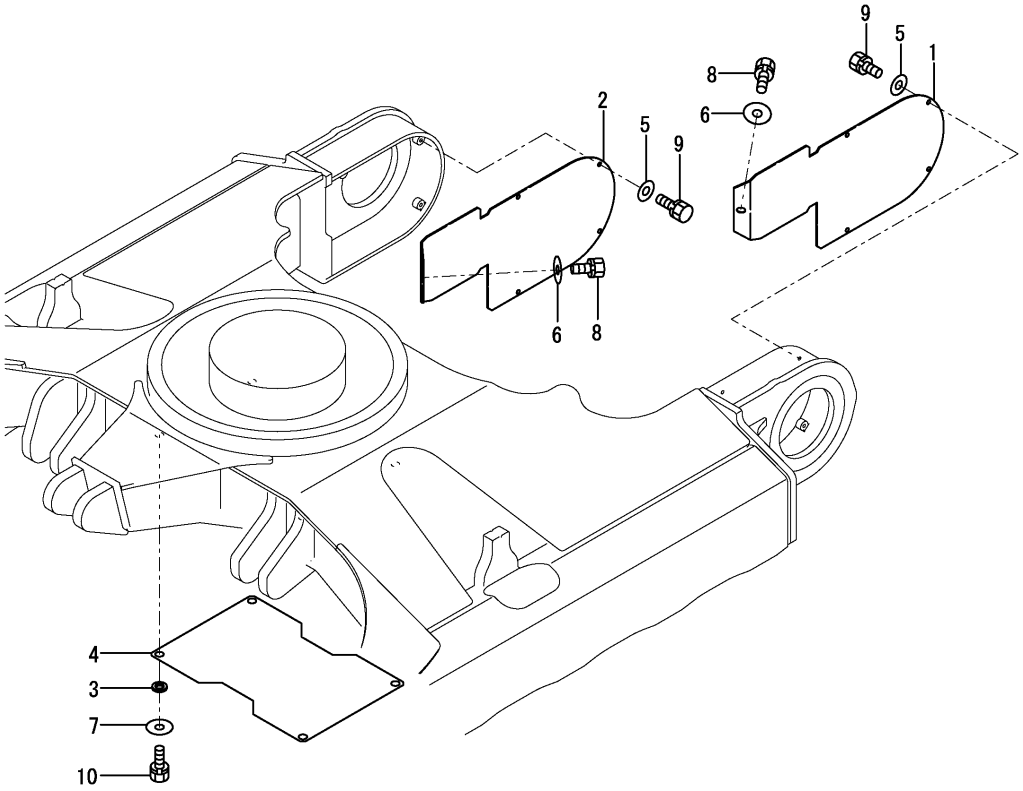

(A)=SV100(US) (D)=
(B)=SV100(AS) (E)=
(C)=SV100(NZ) (F)=

No.	Lev.	Parts No.	Description	Q'ty (A)	(B)	(C)	(D)	(E)	(F)	I	R
1	1	172499-61150	COVER, TRAVEL	1	1	1					
1-1	1	172499-61150-1	COVER, TRAVEL	1	1	1				S	
	(A=M/#00758)	(B=M/#00758)	(C=M/#00758)								
2	1	172499-61160	COVER, TRAVEL	1	1	1					
2-1	1	172499-61160-1	COVER, TRAVEL	1	1	1				S	
	(A=M/#00758)	(B=M/#00758)	(C=M/#00758)								
3	1	172162-61500	TRIM	4	4	4					
4	1	172187-61500-2	COVER	1	1	1					
4-1	1	172187-61500-3	COVER	1	1	1				S	
	(A=M/#00758)	(B=M/#00758)	(C=M/#00758)								
5	1	22137-100000	WASHER, 10	8	8	8					
6	1	22157-100000	WASHER, 10	2	2	2					
7	1	22157-120000	WASHER, 12	4	4	4					
8	1	26013-100202	BOLT, M10X 20	2	2	2					
9	1	26013-100202	BOLT, M10X 20	8	8	8					
10	1	26013-120302	BOLT, M12X 30	4	4	4					

N:Old $\frac{\text{Yes}}{\text{No}}$ New, Q:Old $\frac{\text{No}}{\text{Yes}}$ New, R:Old $\frac{\text{Yes}}{\text{Yes}}$ New, S:Old $\frac{\text{No}}{\text{No}}$ New, W:Add, Z:Discontinued, F:Interchangeable by set, K:Q'ty Change

Copyright (C) YANMAR CO., LTD. All RightsReserved.

Fig.40. STEP,INSTRUMENT PANEL & ARM REST

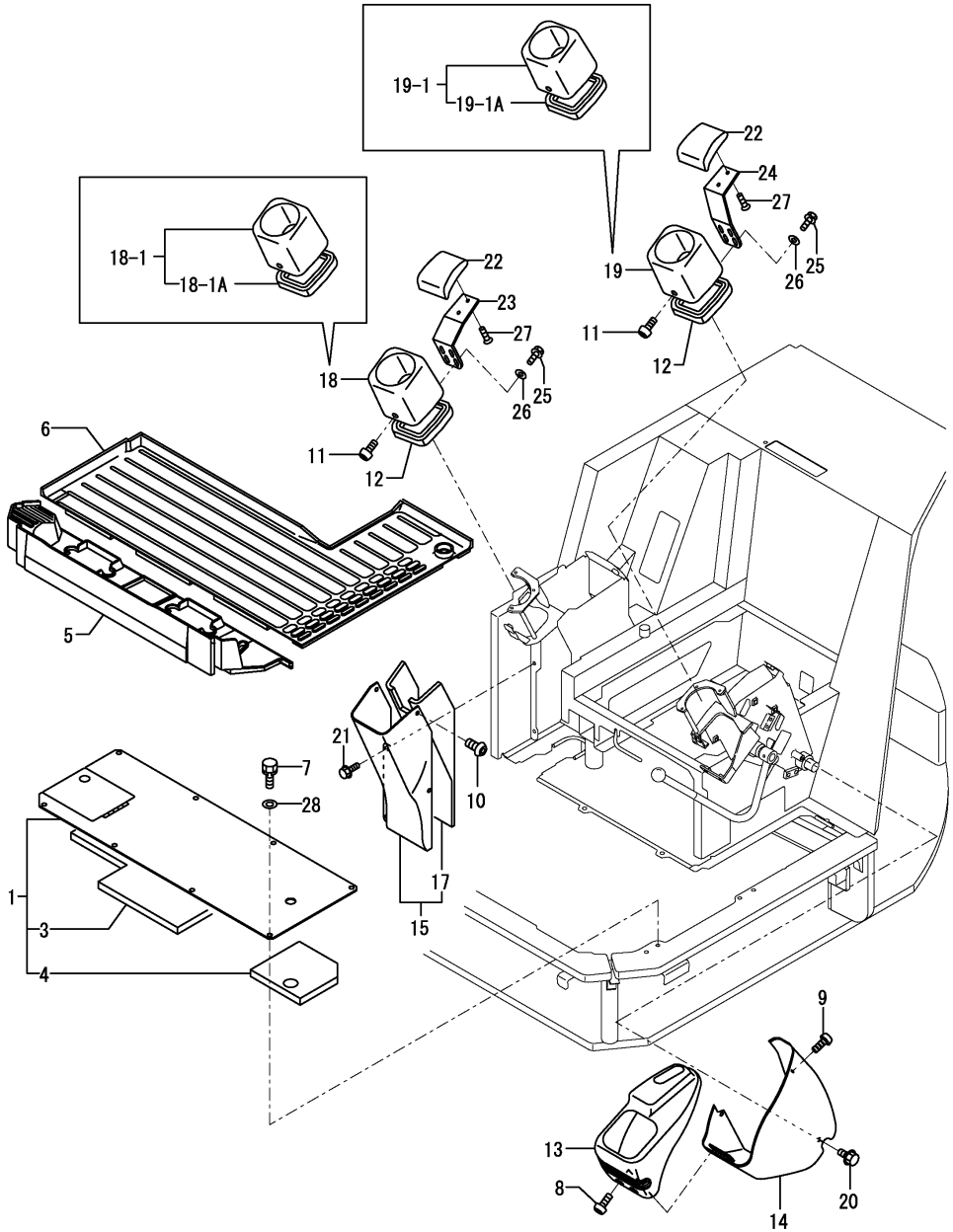

(A)=SV100(US) (D)=
(B)=SV100(AS) (E)=
(C)=SV100(NZ) (F)=

No.	Lev.	Parts No.	Description	Q'ty (A)	(B)	(C)	(D)	(E)	(F)	I	R
1	1	172463-62101	STEP	1	1	1					
3	2	172463-62140	SPONGE	1	1	1					
4	2	172463-62150	SPONGE	1	1	1					
5	1	172478-62160	MAT, FLOOR	1	1	1					
6	1	172455-62170	MAT, FLOOR	1	1	1					
6-1	1	172455-62171	MAT, FLOOR	1	1	1				N	
	(A=M/#00565)	(B=M/#00565)	(C=M/#00565)								
7	1	26013-100202	BOLT, M10X 20	8	8	8					
8	1	172458-46720	BOLT	3	3	3					
9	1	172458-46720	BOLT	1	1	1					
10	1	172458-46720	BOLT	1	1	1					
10-1	1	172519-63240	BOLT	1	1	1				N	
	(A=M/#01663)	(B=M/#01663)	(C=M/#01663)								
11	1	172458-46720	BOLT	2	2	2					
12	1	172162-62540	SEAL, STEP	2	2	2				Z	
	(A=M/#01663)	(B=M/#01663)	(C=M/#01663)								
13	1	172458-63100	PANEL, INSTRUMENT	1	1	1					
14	1	172458-63120	PANEL, INSTRUMENT	1	1	1					
15	1	172478-63200	COVER ASSY	1	1	1					
17	2	172478-63220	SPONGE	1	1	1					
18	1	172472-63210	COVER	1	1	1					
18-1	1	172472-63150	COVER	1	1	1				N	
	(A=M/#01663)	(B=M/#01663)	(C=M/#01663)								
18-1A	2	172162-62540	SEAL, STEP	1	1	1					
19	1	172472-63220	COVER	1	1	1					
19-1	1	172472-63160	COVER	1	1	1				N	
	(A=M/#01663)	(B=M/#01663)	(C=M/#01663)								
19-1A	2	172162-62540	SEAL, STEP	1	1	1					
20	1	172519-63240	BOLT	2	2	2					
21	1	172519-63240	BOLT	3	3	3					
22	1	172441-44320	ARMREST	2	2	2					
23	1	172472-64532	PLATE, ARMREST	1	1	1					
23-1	1	172472-64532-1	PLATE, ARMREST	1	1	1				S	
	(A=M/#00758)	(B=M/#00758)	(C=M/#00758)								
24	1	172472-64542	PLATE, ARMREST	1	1	1					
24-1	1	172472-64542-1	PLATE, ARMREST	1	1	1				S	
	(A=M/#00758)	(B=M/#00758)	(C=M/#00758)								
25	1	172165-66980	BOLT	4	4	4					
26	1	22137-080000	WASHER, 8	4	4	4					
27	1	26577-080122	SCREW, M8X12	4	4	4					
28	1	22137-100000	WASHER, 10	8	8	8				W	
	(A=MXXXXX)	(B=MXXXXX)	(C=MXXXXX)								

N:Old $\overset{\text{Yes}}{\underset{\text{No}}{\leftrightarrow}}$ New, Q:Old $\overset{\text{No}}{\underset{\text{Yes}}{\leftrightarrow}}$ New, R:Old $\overset{\text{Yes}}{\underset{\text{Yes}}{\leftrightarrow}}$ New, S:Old $\overset{\text{No}}{\underset{\text{No}}{\leftrightarrow}}$ New, W:Add, Z:Discontinued, F:Interchangeable by set, K:Q'ty Change

Copyright (C) YANMAR CO., LTD. All RightsReserved.

Fig.41. SEAT & SEAT MOUNT

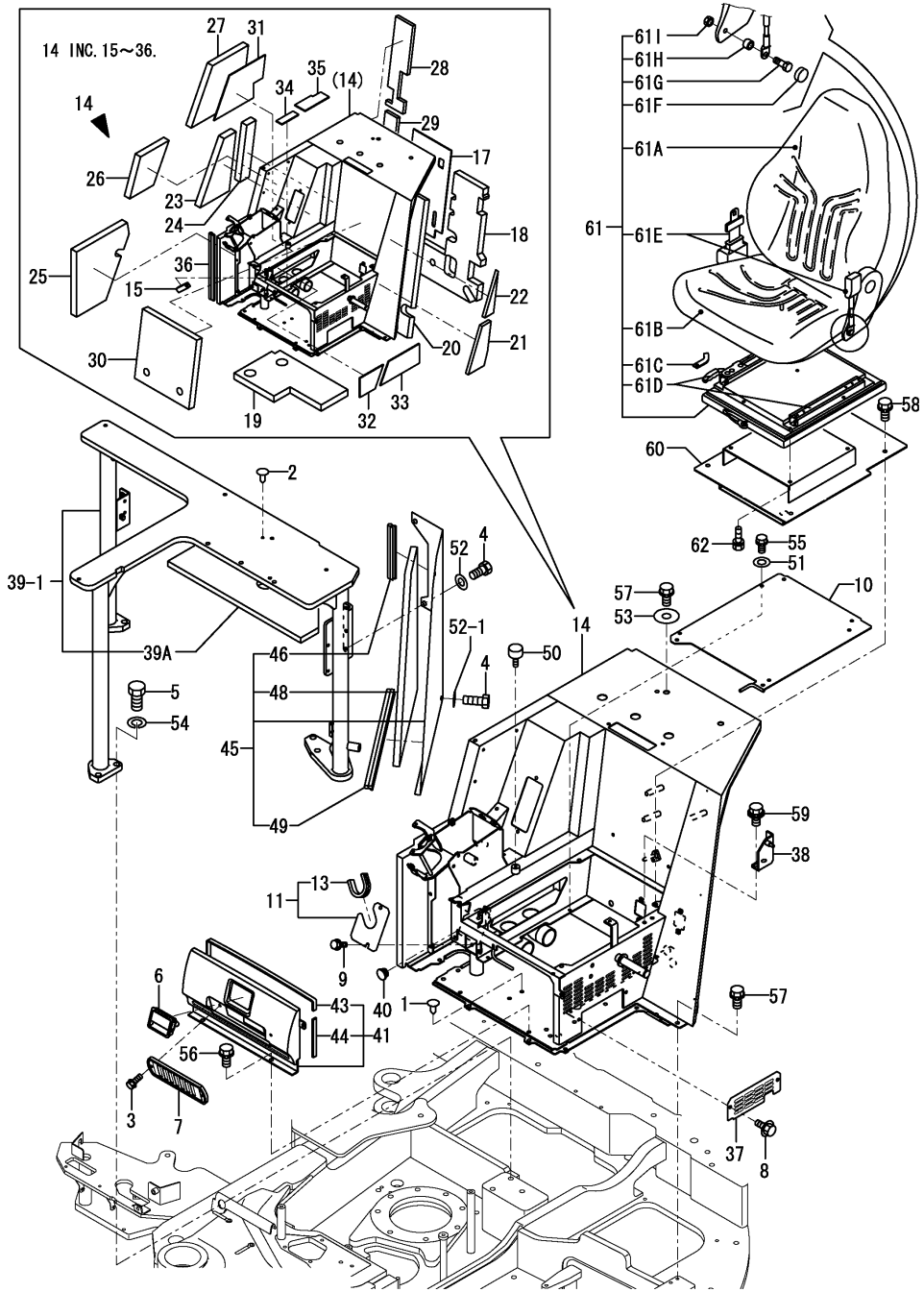

(A)=SV100(US) (D)=
(B)=SV100(AS) (E)=
(C)=SV100(NZ) (F)=

No.	Lev.	Parts No.	Description	Q'ty (A)	(B)	(C)	(D)	(E)	(F)	I	R
1	1	172122-17190	CLIP, TREE	4	4	4					
2	1	172444-17660	CLIP, TREE	1	1	1					
3	1	172164-45880	BOLT	2	2	2					
4	1	172168-46760	BOLT M10X20	6	6	6					
5	1	172165-53490	BOLT M16X 40	7	7	7					
6	1	172187-61421	HANDLE, LOCK	1	1	1					
7	1	172187-61690	VENTILATOR	1	1	1					
8	1	172519-63240	BOLT	2	2	2					
9	1	172519-63240	BOLT	2	2	2					
10	1	172499-64040	PLATE ASSY,A/C (72)	1	1	1					
10-1	1	172499-64040-1	PLATE ASSY,A/C (49)	1	1	1				S	
	(A=M/#00758)	(B=M/#00758)	(C=M/#00758)								
11	1	172499-64060	COVER, SEAT MOUNT	1	1	1					
11-1	1	172499-64060-1	COVER, SEAT MOUNT	1	1	1				S	
	(A=M/#00758)	(B=M/#00758)	(C=M/#00758)								
13	2	172455-64700	TRIM	1	1	1					
14	1	172499-64201	SEAT MOUNT ASSY (72)	1	1	1					
14-1	1	172499-64201-1	SEAT MOUNT ASSY (49)	1	1	1				S	
	(A=M/#00758)	(B=M/#00758)	(C=M/#00758)								
15	2	172455-61580	TRIM	1	1	1					
17	2	172499-65010	SHEET, INSULATOR	1	1	1					
18	2	172499-65020	SPONGE	1	1	1					
19	2	172499-65030	SPONGE	1	1	1					
20	2	172499-65040	SPONGE	1	1	1					
21	2	172499-65050	SPONGE	1	1	1					
22	2	172499-65060	SPONGE	1	1	1					
23	2	172499-65070	SPONGE	1	1	1					
24	2	172499-65080	SPONGE	1	1	1					
25	2	172499-65090	SPONGE	1	1	1					
26	2	172499-65100	SPONGE	1	1	1					
27	2	172499-65110	SPONGE	1	1	1					
28	2	172499-65120	SPONGE	1	1	1					
29	2	172499-65130	SPONGE	1	1	1					
30	2	172499-65140	SPONGE	1	1	1					
31	2	172499-65150	SHEET, INSULATOR	1	1	1					
32	2	172499-65700	SHEET, INSULATOR	1	1	1					
33	2	172499-65710	SHEET, INSULATOR	1	1	1					
34	2	172499-65720	SHEET, INSULATOR	1	1	1					
35	2	172499-65730	SHEET, INSULATOR	1	1	1					
36	2	172164-66640	RUBBER, SEAL	1	1	1					
37	1	172478-64280	COVER, SEAT MOUNT	1	1	1					
37-1	1	172478-64280-1	COVER, SEAT MOUNT	1	1	1				S	
	(A=M/#00758)	(B=M/#00758)	(C=M/#00758)								
38	1	172478-64660	BRACKET,GAS SPRING	1	1	1					
39	1	172499-64800	MOUNT ASSY	1	1	1					
39-1	1	172499-64700	MOUNT ASSY	1	1	1				N	
	(A=M/#00719)	(B=M/#00719)	(C=M/#00719)								
39A	2	172499-64710	SPONGE	1	1	1				W	
	(A=M/#00719)	(B=M/#00719)	(C=M/#00719)								
40	1	172187-64900	PLUG	2	2	2					
41	1	172478-64900	GRILLE ASSY	1	1	1					

N:Old $\overset{\text{Yes}}{\underset{\text{No}}{\leftrightarrow}}$ New, Q:Old $\overset{\text{No}}{\underset{\text{Yes}}{\leftrightarrow}}$ New, R:Old $\overset{\text{Yes}}{\underset{\text{Yes}}{\leftrightarrow}}$ New, S:Old $\overset{\text{No}}{\underset{\text{No}}{\leftrightarrow}}$ New, W:Add, Z:Discontinued, F:Interchangeable by set, K:Q'ty Change

++ CONTINUE ++

Copyright (C) YANMAR CO., LTD. All RightsReserved.

Fig.41. SEAT & SEAT MOUNT

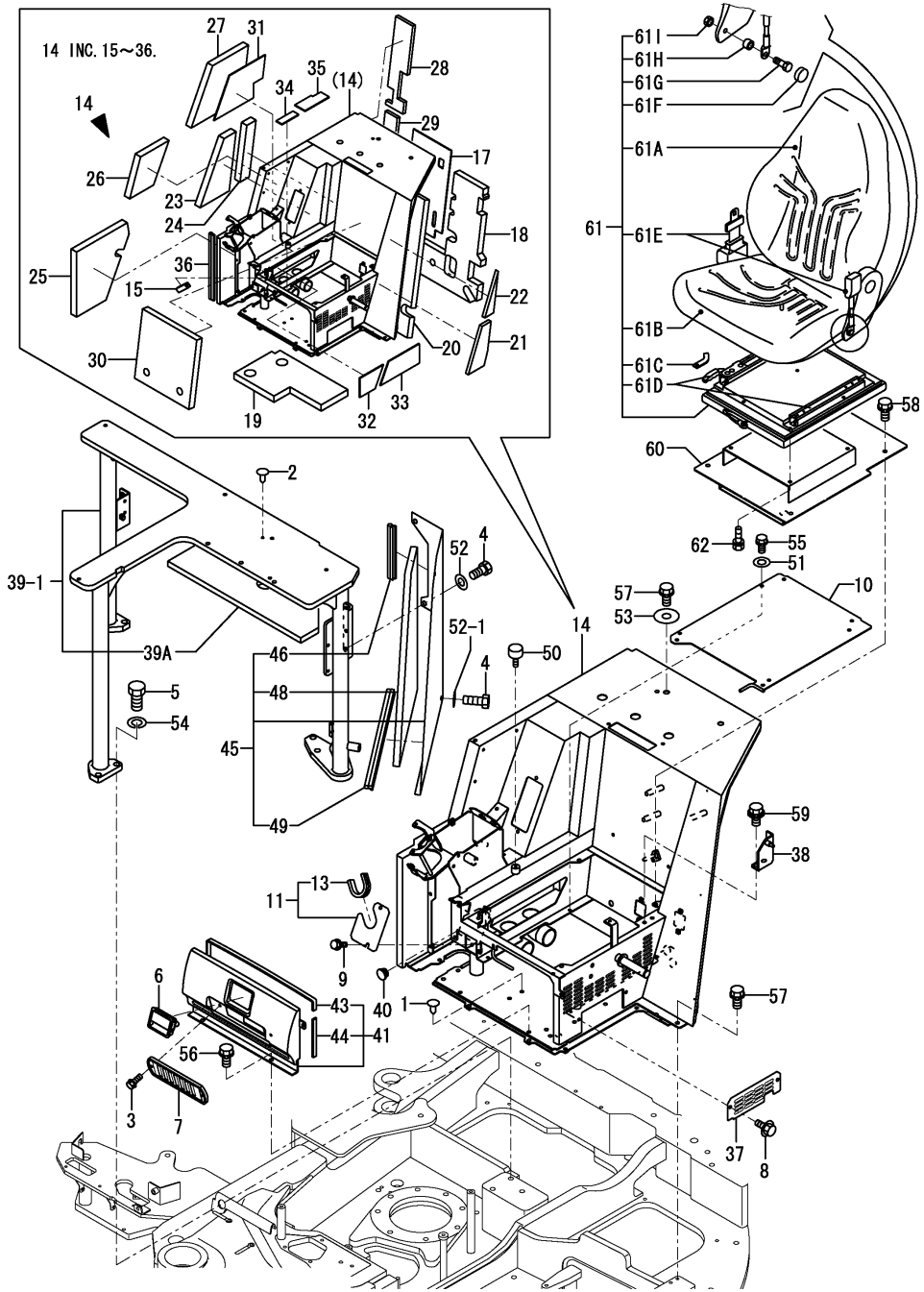

(A)=SV100(US) (D)=
(B)=SV100(AS) (E)=
(C)=SV100(NZ) (F)=

No.	Lev.	Parts No.	Description	Q'ty (A)	(B)	(C)	(D)	(E)	(F)	I	R
43	2	172478-64970	TRIM, 685	1	1	1					
44	2	172478-64980	TRIM, 130	1	1	1					
45	1	172499-64951	COVER, SEAT MOUNT	1	1	1					
45-1	1	172499-64951-1	COVER, SEAT MOUNT	1	1	1				S	
(A=M/#01231)		(B=M/#01231)	(C=M/#01231)								
46	2	172162-61120	SEAL	1	1	1					
48	2	172499-64970	SPONGE	1	1	1					
49	2	172499-64990	SEAL, 730	1	1	1					
50	1	172176-67150	RUBBER, STOPPER	2	2	2					
51	1	22137-080000	WASHER, 8	4	4	4					
52	1	22137-100000	WASHER, 10	3	3	3					
52-1	1	22137-100000	WASHER, 10	6	6	6				K	
(A=M/#01726)		(B=M/#01726)	(C=M/#01726)								
53	1	22157-100000	WASHER, 10	2	2	2					
54	1	22217-160000	WASHER, SPRING 16	7	7	7					
55	1	26013-080162	BOLT, M8X 16	4	4	4					
56	1	26013-100202	BOLT, M10X 20	2	2	2					
57	1	26013-100202	BOLT, M10X 20	6	6	6					
58	1	26013-100202	BOLT, M10X 20	4	4	4					
59	1	26014-100202	BOLT, M10X 20	2	2	2					
60	1	172499-64080	PLATE ASSY,SEAT US	1	1	1					
61	1	172467-64101	SEAT, OPERATOR	1	1	1					
61A	2	172467-64110	CUSHION, BACKREST	1	1	1				W	
(A=M/#XXXXX)		(B=M/#XXXXX)	(C=M/#XXXXX)								
61B	2	172467-64120	CUSHION, SEAT	1	1	1				W	
(A=M/#XXXXX)		(B=M/#XXXXX)	(C=M/#XXXXX)								
61C	2	172467-64130	STOPPER	1	1	1				W	
(A=M/#XXXXX)		(B=M/#XXXXX)	(C=M/#XXXXX)								
61D	2	172467-64140	RAIL SET	1	1	1				W	
(A=M/#XXXXX)		(B=M/#XXXXX)	(C=M/#XXXXX)								
61E	2	172467-64150	SEAT BELT	1	1	1				W	
(A=M/#XXXXX)		(B=M/#XXXXX)	(C=M/#XXXXX)								
61F	2	172467-64160	COVER, CAP	2	2	2				W	
(A=M/#XXXXX)		(B=M/#XXXXX)	(C=M/#XXXXX)								
61G	2	172467-64170	BOLT	2	2	2				W	
(A=M/#XXXXX)		(B=M/#XXXXX)	(C=M/#XXXXX)								
61H	2	172467-64180	TUBE	2	2	2				W	
(A=M/#XXXXX)		(B=M/#XXXXX)	(C=M/#XXXXX)								
61I	2	172467-64190	NUT	2	2	2				W	
(A=M/#XXXXX)		(B=M/#XXXXX)	(C=M/#XXXXX)								
62	1	26013-080162	BOLT, M8X 16	4	4	4					

N:Old ←Yes/No→ New, Q:Old ←No/Yes→ New, R:Old ←Yes/Yes→ New, S:Old ←No/No→ New, W:Add, Z:Discontinued, F:Interchangeable by set, K:Q'ty Change

Copyright (C) YANMAR CO., LTD. All RightsReserved.

Fig.42. HOOD(BODY)

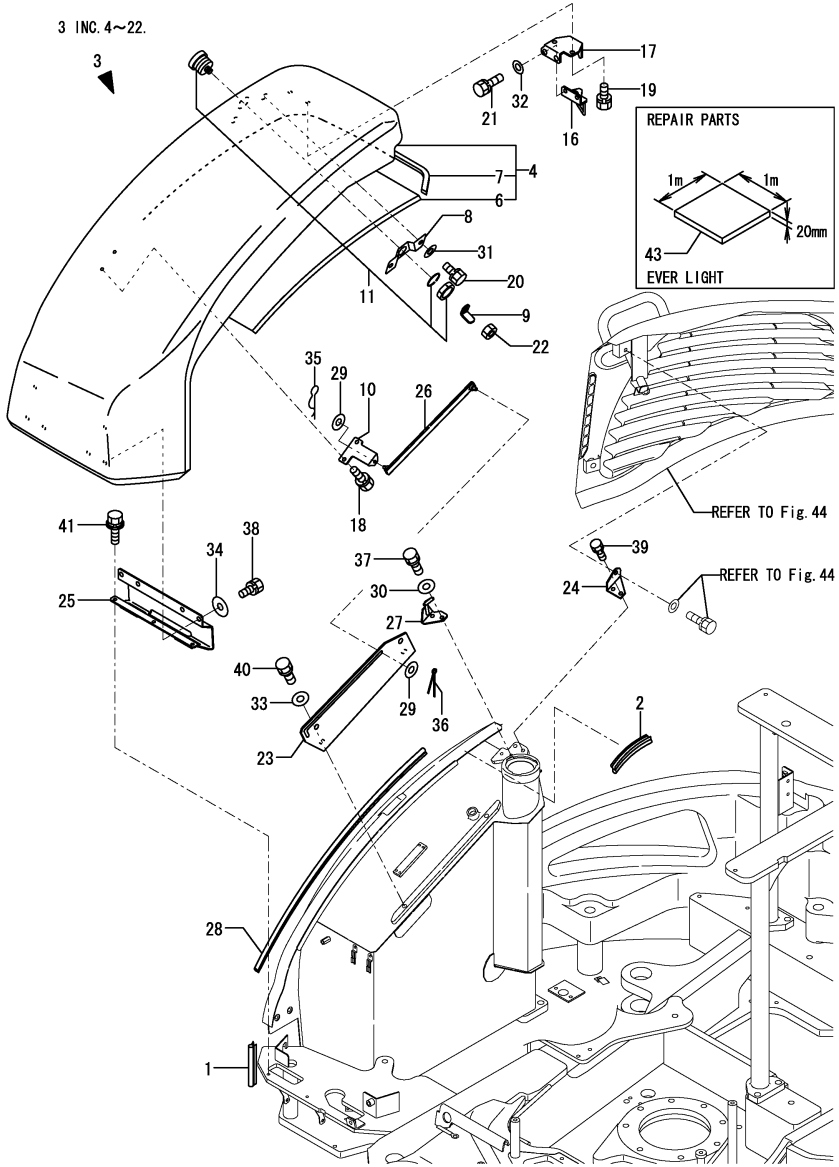

(A)=SV100(US) (D)=
(B)=SV100(AS) (E)=
(C)=SV100(NZ) (F)=

No.	Lev.	Parts No.	Description	Q'ty (A)	(B)	(C)	(D)	(E)	(F)	I	R
1	1	172444-54920	SEAL, WEIGHT	1	1	1					
2	1	172434-61180	TRIM	1	1	1					
3	1	172499-65190	BONNET B ASSY,EP	1	1	1				W	
	(A=M/#00798)	(B=M/#00798)	(C=M/#00798)								
4	2	172478-65200	BONNET B	1	1	1					
6	3	172455-66110	SPONGE	1	1	1					
7	3	172455-66712	SPONGE	1	1	1					
7-1	3	172455-66713	SPONGE	1	1	1				N	
	(A=M/#01663)	(B=M/#01663)	(C=M/#01663)								
8	2	172455-65230	PLATE,KEY (GILT	1	1	1					
9	2	172455-65240	PLATE, ROCK	1	1	1					
10	2	172499-65280	BRACKET,STOPPER	1	1	1					
11	2	172164-66170	KEY ASSY, CYLINDER	1	1	1					
16	2	172455-66430	BRACKET, GUIDE	1	1	1					
17	2	172455-66450	PLATE	1	1	1					
18	2	26013-080162	BOLT, M8X 16	2	2	2					
19	2	26013-100202	BOLT, M10X 20	2	2	2					
20	2	26013-100202	BOLT, M10X 20	2	2	2					
20-1	2	26014-100202	BOLT, M10X 20	2	2	2				N	
	(A=M/#00798)	(B=M/#00798)	(C=M/#00798)								
21	2	26013-100252	BOLT, M10X 25	2	2	2					
21-1	2	26014-100252	BOLT, M10X 25	2	2	2				N	
	(A=M/#00798)	(B=M/#00798)	(C=M/#00798)								
22	2	26347-100002	NUT, M10	1	1	1					
23	1	172455-65220	PLATE, RAIL	1	1	1					
24	1	172455-65660	STAY ASSY	1	1	1					
25	1	172455-65741	HINGE ASSY	1	1	1					1
26	1	172455-66200	ROD, STOPPER	1	1	1					
27	1	172455-66400	BRACKET, ROCK	1	1	1					
28	1	172187-68050	SEAL, COVER	1	1	1					
29	1	22137-080000	WASHER, 8	2	2	2					
30	1	22137-080000	WASHER, 8	2	2	2					
31	1	22137-100000	WASHER, 10	2	2	2				Z	
	(A=M/#00798)	(B=M/#00798)	(C=M/#00798)								
32	1	22137-100000	WASHER, 10	2	2	2				Z	
	(A=M/#00798)	(B=M/#00798)	(C=M/#00798)								
33	1	22137-120000	WASHER, 12	4	4	4					
34	1	22157-080000	WASHER, 8	4	4	4					
35	1	22372-080000	PIN, SNAP 8	1	1	1					
36	1	22417-200200	PIN, COTTER 2.0X20	1	1	1					
37	1	26013-080122	BOLT, M8X 12	2	2	2					
38	1	26013-080162	BOLT, M8X 16	4	4	4					
39	1	26013-100252	BOLT, M10X 25	2	2	2					
40	1	26013-120202	BOLT, M12X 20	4	4	4					
41	1	26014-080162	BOLT, M8X 16	3	3	3					
42A	1	172437-03361	LABEL, BATTERY US	1	1	1					2
43	1	172478-65750	SPONGE	1	1	1					3

Remarks
(1)PLEASE USE THIS PART WITH FOLLOWING LABEL AT THE SAME TIME.
REF NO.42A.
(2)LABEL IS NOT ILLUSTRATED.
(3)REPAIR PARTS

N:Old $\xleftarrow[\text{No}]{\text{Yes}}$ New, Q:Old $\xleftarrow[\text{Yes}]{\text{No}}$ New, R:Old $\xleftarrow[\text{Yes}]{\text{Yes}}$ New, S:Old $\xleftarrow[\text{No}]{\text{No}}$ New, W:Add, Z:Discontinued, F:Interchangeable by set, K:Q'ty Change

Copyright (C) YANMAR CO., LTD. All RightsReserved.

Fig.43. HOOD(UPPER COVER)

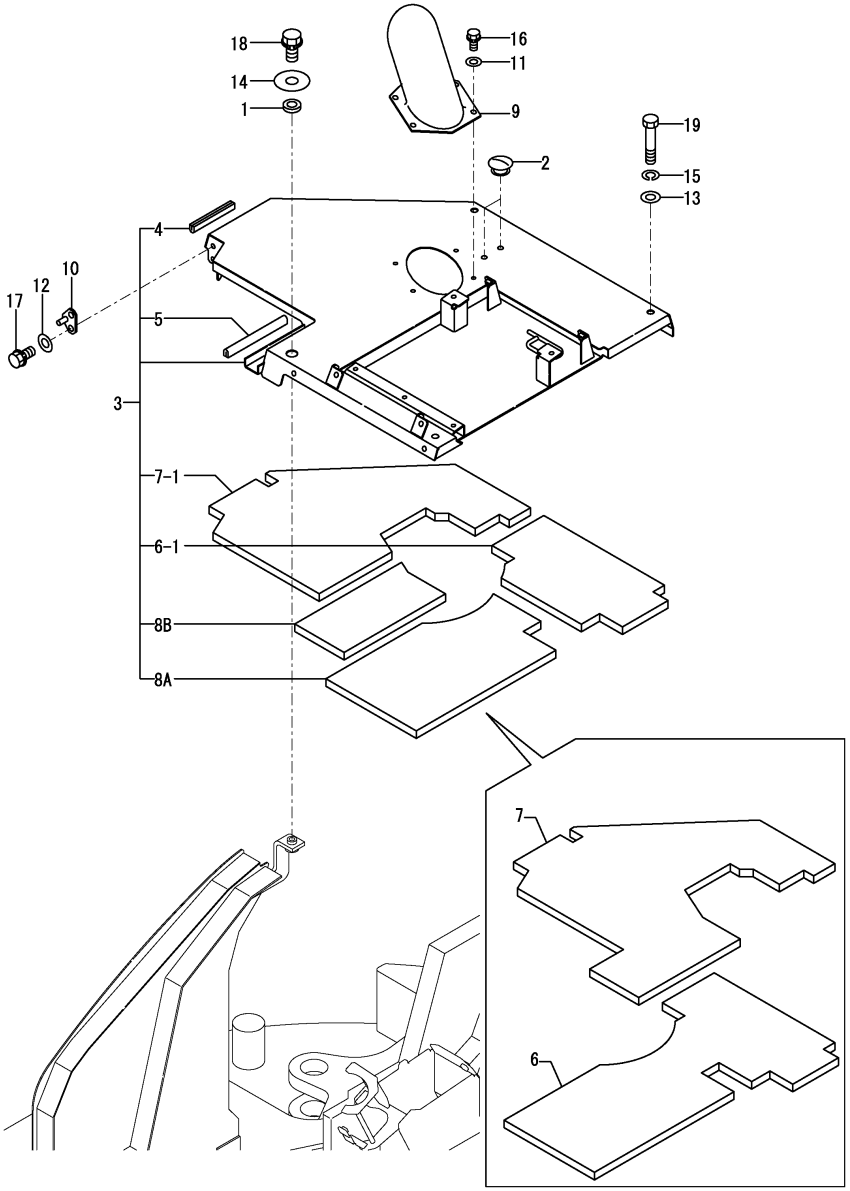

Remarks
(1)INTERCHANGEABLE BY SIMULTANEOUS REPLACEMENT WITH REF.NO.8A
(2)INTERCHANGEABLE BY SIMULTANEOUS REPLACEMENT WITH REF.NO.8B

(A)=SV100(US) (D)=
(B)=SV100(AS) (E)=
(C)=SV100(NZ) (F)=

No.	Lev.	Parts No.	Description	Q'ty (A)	(B)	(C)	(D)	(E)	(F)	I	R
1	1	172162-61500	TRIM	1	1	1					
2	1	172187-64900	PLUG	2	2	2					
3	1	172499-65200	BONNET ,UPPER (87)	1	1	1					
3-1	1	172499-65201	BONNET ,UPPER (87)	1	1	1				N	
	(A=M/#01122)	(B=M/#01122)	(C=M/#01122)								
3-2	1	172499-65201-1	BONNET ,UPPER (2J)	1	1	1				S	
	(A=M/#01231)	(B=M/#01231)	(C=M/#01231)								
4	2	172444-17620	SEAL	2	2	2					
5	2	172164-61250	RUBBER, SEAL	1	1	1					
6	2	172499-65170	SPONGE	1	1	1					
6-1	2	172499-65171	SPONGE	1	1	1				F	1
	(A=M/#01122)	(B=M/#01122)	(C=M/#01122)								
7	2	172499-65180	SPONGE	1	1	1					
7-1	2	172499-65181	SPONGE	1	1	1				F	2
	(A=M/#01122)	(B=M/#01122)	(C=M/#01122)								
8A	2	172499-65500	INSURATOR A	1	1	1				W	
	(A=M/#01122)	(B=M/#01122)	(C=M/#01122)								
8B	2	172499-65510	INSURATOR B	1	1	1				W	
	(A=M/#01122)	(B=M/#01122)	(C=M/#01122)								
9	1	172455-65700	COVER ASSY	1	1	1					
9-1	1	172455-65701	COVER ASSY	1	1	1				N	
	(A=MZZZZZ)	(B=MZZZZZ)	(C=MZZZZZ)								
10	1	172455-66470	PLATE, STOPPER	1	1	1					
11	1	22137-080000	WASHER, 8	4	4	4					
12	1	22137-100000	WASHER, 10	2	2	2					
13	1	22137-100000	WASHER, 10	3	3	3					
14	1	22157-120000	WASHER, 12	1	1	1					
15	1	22217-100000	WASHER, SPRING 10	3	3	3					
16	1	26013-080162	BOLT, M8X 16	4	4	4					
17	1	26013-100202	BOLT, M10X 20	2	2	2					
18	1	26013-120202	BOLT, M12X 20	1	1	1					
19	1	26116-100502	BOLT, M10X 50 PLATED	3	3	3					

N:Old $\xleftrightarrow[\text{No}]{\text{Yes}}$ New, Q:Old $\xleftrightarrow[\text{Yes}]{\text{No}}$ New, R:Old $\xleftrightarrow[\text{Yes}]{\text{Yes}}$ New, S:Old $\xleftrightarrow[\text{No}]{\text{No}}$ New, W:Add, Z:Discontinued, F:Interchangeable by set, K:Q'ty Change

Copyright (C) YANMAR CO., LTD. All RightsReserved.

Fig.44. HOOD(SIDE & REAR COVER)

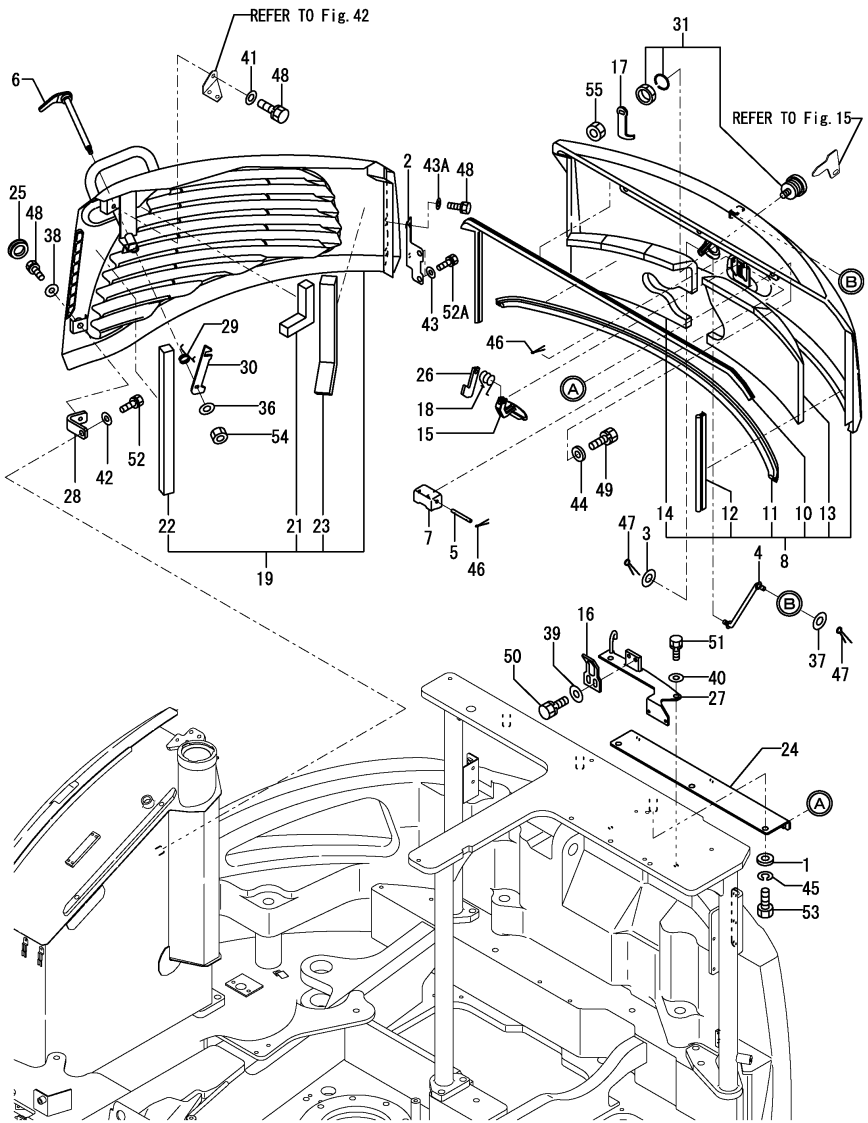

Remarks
(1)PLEASE USE THIS PART WITH FOLLOW-
ING LABEL AT THE SAME TIME.
REF NO.56A & 56B.
(2)PLEASE USE THIS PART WITH FOLLOW-
ING LABEL AT THE SAME TIME.
REF NO.57A & 57B
(3)LABEL ARE NOT ILLUSTRATED.

(A)=SV100(US) (D)=
(B)=SV100(AS) (E)=
(C)=SV100(NZ) (F)=

No.	Lev.	Parts No.	Description	Q'ty (A)	(B)	(C)	(D)	(E)	(F)	I	R
1	1	194145-04810	WASHER 10	3	3	3					
2	1	172455-13361	PLATE ASSY	1	1	1					
3	1	1A1380-62160	WASHER	1	1	1					
4	1	172444-64730	ROD,STOPPER	1	1	1					
5	1	172458-65050	SHAFT	1	1	1					
6	1	172455-65060	HOOK	1	1	1					
7	1	172458-65060	COVER, LOCK	1	1	1					
8	1	172455-65100-1	BONNET A ASSY (87)	1	1	1					1
8-1	1	172455-65100-2	BONNET A ASSY (2J)	1	1	1				S	1
	(A=M/#01231)	(B=M/#01231)	(C=M/#01231)								
10	2	172455-65950	RUBBER, SEAL	1	1	1					
11	2	172455-65960	RUBBER, SEAL	1	1	1					
12	2	172455-65970	RUBBER, SEAL	1	1	1					
13	2	172455-66630	SPONGE	1	1	1					
14	2	172455-66670	SPONGE	1	1	1					
15	1	172187-65210	LEVER ASSY, LOCK	1	1	1					
16	1	172187-65270	PLATE, CATCH	1	1	1					
17	1	172444-65270	ROCK PLATE	1	1	1					
18	1	172734-65270	SPRING, CATCH	1	1	1					
19	1	172499-65300	BONNET R (YELLOW:87)	1	1	1					
19-1	1	172499-65300-1	BONNET R (YELLOW:2J)	1	1	1				S	
	(A=M/#01231)	(B=M/#01231)	(C=M/#01231)								
21	2	172499-65350	SPONGE	1	1	1					
22	2	172499-65360	SPONGE	1	1	1					
23	2	172499-65370	SPONGE	1	1	1					
24	1	172455-65410	BRACKET	1	1	1					2
25	1	172463-65410	PLUG 28X2.3	1	1	1					
26	1	172124-65480	CATCHER	1	1	1					
27	1	172455-65500	BRACKET, ROCK	1	1	1					
27-1	1	172455-65501	BRACKET ASSY, LOCK	1	1	1				N	
	(A=M/#01663)	(B=M/#01663)	(C=M/#01663)								
28	1	172455-65560	STAY	1	1	1					
29	1	172156-65690	SPRING, STOPPER	1	1	1					
30	1	172455-65800	PLATE, LOCK	1	1	1					
31	1	172164-66170	KEY ASSY, CYLINDER	1	1	1					
36	1	22137-080000	WASHER, 8	1	1	1					
37	1	22137-080000	WASHER, 8	1	1	1					
38	1	22137-100000	WASHER, 10	1	1	1					
39	1	22137-100000	WASHER, 10	2	2	2					
40	1	22137-100000	WASHER, 10	2	2	2					
41	1	22137-100000	WASHER, 10	1	1	1					
42	1	22137-100000	WASHER, 10	1	1	1					
43	1	22157-100000	WASHER, 10	2	2	2					
43A	1	22157-100000	WASHER, 10	2	2	2					
44	1	22157-100000	WASHER, 10	3	3	3					
45	1	22217-100000	WASHER, SPRING 10	3	3	3					
46	1	22417-200200	PIN, COTTER 2.0X20	2	2	2					
47	1	22417-200200	PIN, COTTER 2.0X20	2	2	2					
48	1	26013-100252	BOLT, M10X 25	4	4	4					
49	1	26013-100252	BOLT, M10X 25	3	3	3					
50	1	26013-100252	BOLT, M10X 25	2	2	2					

N:Old $\xleftrightarrow[\text{No}]{\text{Yes}}$ New, Q:Old $\xleftrightarrow[\text{Yes}]{\text{No}}$ New, R:Old $\xleftrightarrow[\text{Yes}]{\text{Yes}}$ New, S:Old $\xleftrightarrow[\text{No}]{\text{No}}$ New, W:Add, Z:Discontinued, F:Interchangeable by set, K:Q'ty Change

++ CONTINUE ++

Copyright (C) YANMAR CO., LTD. All RightsReserved.

Fig.44. HOOD(SIDE & REAR COVER)

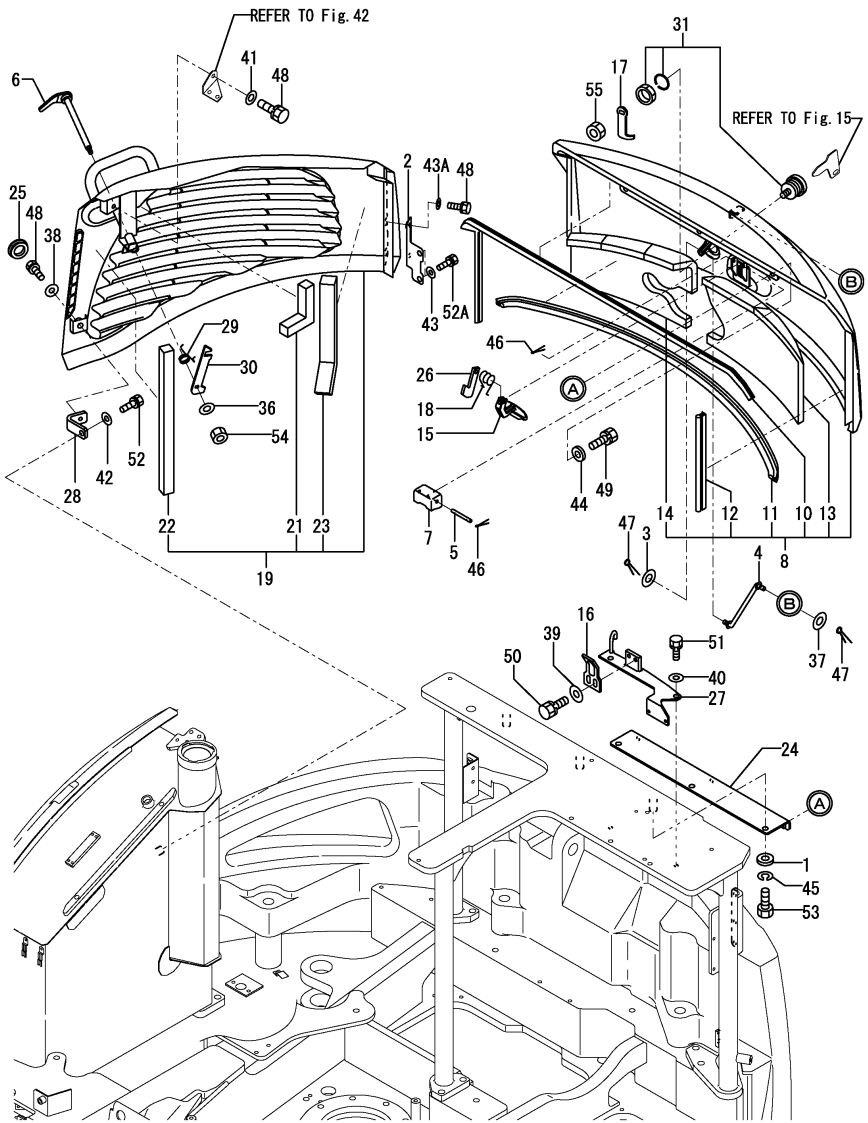

(A)=SV100(US) (D)=
(B)=SV100(AS) (E)=
(C)=SV100(NZ) (F)=

No.	Lev.	Parts No.	Description	Q'ty (A)	(B)	(C)	(D)	(E)	(F)	I	R
51	1	26013-100252	BOLT, M10X 25	2	2	2					
52	1	26013-100252	BOLT, M10X 25	1	1	1					
52A	1	26013-100252	BOLT, M10X 25	2	2	2					
53	1	26076-100252	BOLT, 10.910X 25	3	3	3					
54	1	26347-080002	NUT, M8	1	1	1					
55	1	26347-100002	NUT, M10	1	1	1					
56A	1	172437-03381	LABEL,SWING AREA US	1	1	1					3
56B	1	172437-03402	LABEL, ENG,COVER US	1	1	1					3
57A	1	172A36-03411	LABEL, ENG ROOM	1	1	1					3
57B	1	172437-03422	LABEL, MUFFLER US	1	1	1					3

Remarks
(1)PLEASE USE THIS PART WITH FOLLOWING LABEL AT THE SAME TIME.
REF NO.56A & 56B.
(2)PLEASE USE THIS PART WITH FOLLOWING LABEL AT THE SAME TIME.
REF NO.57A & 57B
(3)LABEL ARE NOT ILLUSTRATED.

N:Old $\overset{\text{Yes}}{\underset{\text{No}}{\leftrightarrows}}$ New, Q:Old $\overset{\text{No}}{\underset{\text{Yes}}{\leftrightarrows}}$ New, R:Old $\overset{\text{Yes}}{\underset{\text{Yes}}{\leftrightarrows}}$ New, S:Old $\overset{\text{No}}{\underset{\text{No}}{\leftrightarrows}}$ New, W:Add, Z:Discontinued, F:Interchangeable by set, K:Q'ty Change

Copyright (C) YANMAR CO., LTD. All RightsReserved.

Fig.45. HOOD(FRONT)

(A)=SV100(US) (D)=
(B)=SV100(AS) (E)=
(C)=SV100(NZ) (F)=

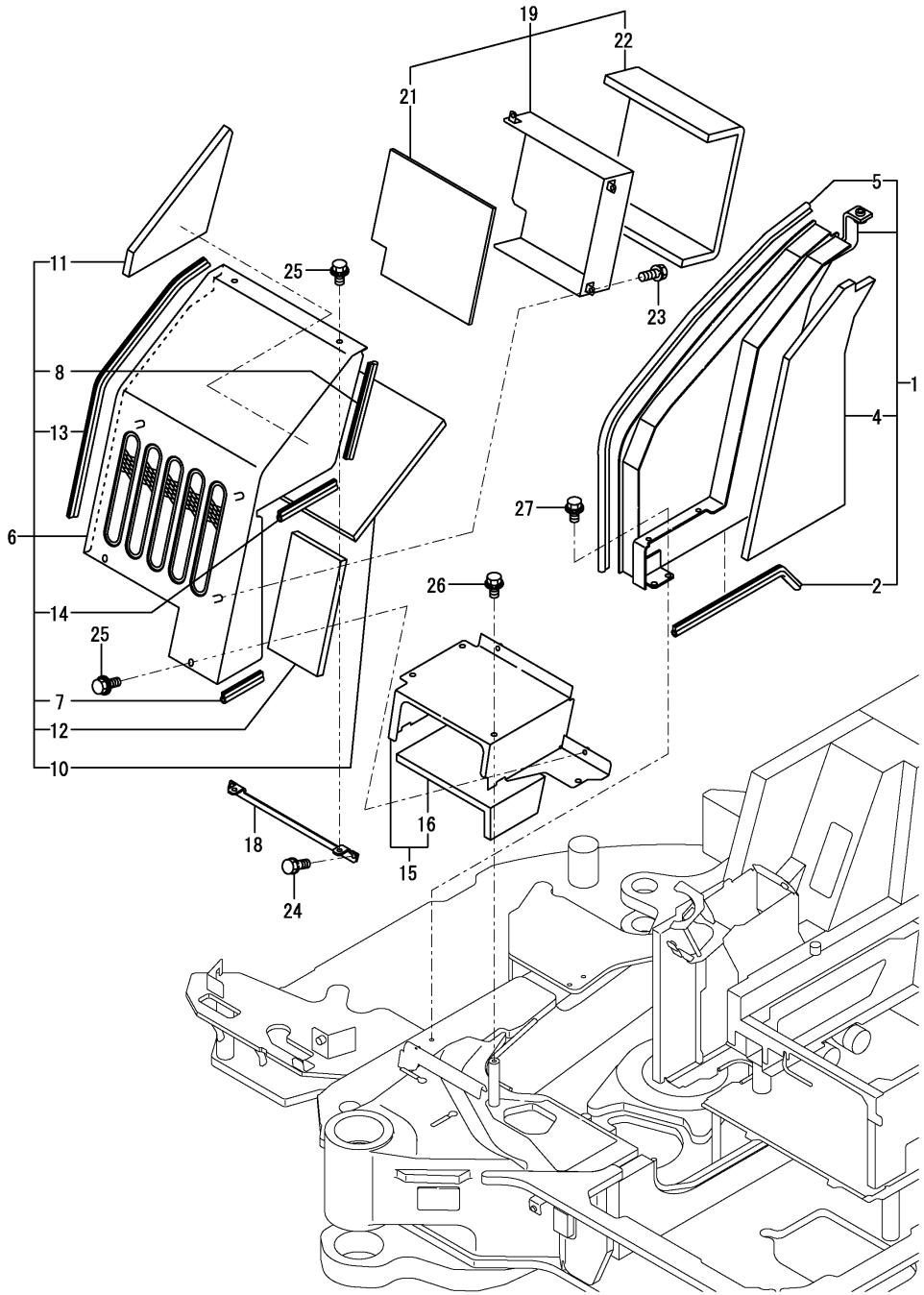

No.	Lev.	Parts No.	Description	Q'ty (A)	(B)	(C)	(D)	(E)	(F)	I	R
1	1	172499-65400	COVER ASSY	1	1	1					
1-1	1	172499-65400-1	COVER ASSY	1	1	1				S	
	(A=M/#01231)	(B=M/#01231)	(C=M/#01231)								
2	2	172162-64320	TRIM	1	1	1					
4	2	172499-65450	SPONGE	1	1	1					
5	2	172478-65490	RUBBER, SEAL	1	1	1					
6	1	172478-65500-1	COVER	1	1	1					
6-1	1	172478-65501	COVER	1	1	1				N	
	(A=M/#01122)	(B=M/#01122)	(C=M/#01122)								
6-2	1	172478-65501-2	COVER	1	1	1				S	
	(A=M/#01231)	(B=M/#01231)	(C=M/#01231)								
7	2	172434-61350	SEAL, RUBBER	1	1	1					
8	2	172162-61880	SEAL	1	1	1					
10	2	172478-65550	SPONGE	1	1	1					
10-1	2	172478-65551	SPONGE	1	1	1				N	
	(A=M/#01122)	(B=M/#01122)	(C=M/#01122)								
11	2	172478-65560	SPONGE	1	1	1					
11-1	2	172478-65561	SPONGE	1	1	1				N	
	(A=M/#01122)	(B=M/#01122)	(C=M/#01122)								
12	2	172478-65570	SPONGE	1	1	1					
13	2	172478-65590	RUBBER, SEAL	1	1	1					
14	2	172422-66150	SEAL	1	1	1					
15	1	172478-65601-1	COVER, STEP	1	1	1					
15-1	1	172478-65601-2	COVER, STEP	1	1	1				S	
	(A=M/#01231)	(B=M/#01231)	(C=M/#01231)								
16	2	172478-65630	SPONGE	1	1	1					
18	1	172478-65650	BRACKET,FRONT	1	1	1					
19	1	172478-65700	DUCT ASSY	1	1	1					
19-1	1	172478-65700-1	DUCT ASSY	1	1	1				S	
	(A=M/#00758)	(B=M/#00758)	(C=M/#00758)								
21	2	172478-65730	SPONGE	1	1	1					
22	2	172478-65740	SPONGE	1	1	1					
23	1	26013-080162	BOLT, M8X 16	3	3	3					
24	1	26013-100202	BOLT, M10X 20	2	2	2					
25	1	26014-100202	BOLT, M10X 20	4	4	4					
26	1	26014-100202	BOLT, M10X 20	3	3	3					
27	1	26014-100202	BOLT, M10X 20	4	4	4					

N:Old $\xleftarrow[\text{No}]{\text{Yes}}$ New, Q:Old $\xleftarrow[\text{Yes}]{\text{No}}$ New, R:Old $\xleftarrow[\text{Yes}]{\text{Yes}}$ New, S:Old $\xleftarrow[\text{No}]{\text{No}}$ New, W:Add, Z:Discontinued, F:Interchangeable by set, K:Q'ty Change

Copyright (C) YANMAR CO., LTD. All RightsReserved.

Fig.46. CABIN MOUNT

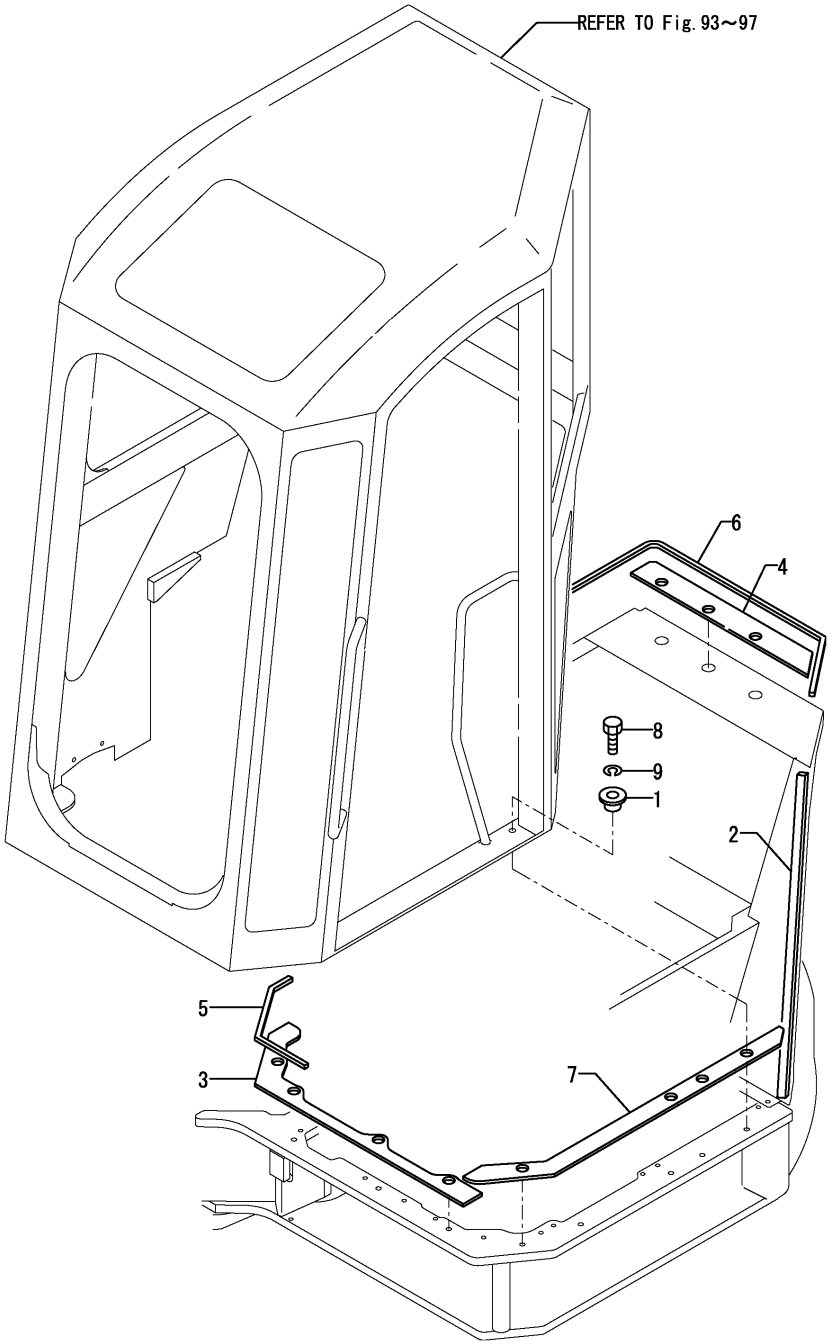

(A)=SV100(US) (D)=
(B)=SV100(AS) (E)=
(C)=SV100(NZ) (F)=

No.	Lev.	Parts No.	Description	Q'ty (A)	(B)	(C)	(D)	(E)	(F)	I	R
1	1	172478-68501	GROMMET, 22X28X40	9	9	9					
1-1	1	172478-68501	GROMMET, 22X28X40	11	11	11				K	
	(A=M/#00585)	(B=M/#00585)	(C=M/#00585)								
2	1	172455-68820	SEAL, SPONGE	1	1	1					
3	1	172478-68850	ABSOBER PAD A	1	1	1					
4	1	172478-68860	ABSOBER PAD B	1	1	1					
5	1	172478-68930	SEAL	1	1	1					
6	1	172478-68940	SEAL	1	1	1				Z	
	(A=M/#00600)	(B=M/#00600)	(C=M/#00600)								
7	1	172478-68981	ABSORBER PAD C	1	1	1					
8	1	172433-64540	BOLT M12X55	11	11	11				W	
	(A=M/#00585)	(B=M/#00585)	(C=M/#00585)								
9	1	22217-120000	WASHER, SPRING 12	11	11	11				W	
	(A=M/#00585)	(B=M/#00585)	(C=M/#00585)								

N:Old $\overset{\text{Yes}}{\underset{\text{No}}{\leftrightarrow}}$ New, Q:Old $\overset{\text{No}}{\underset{\text{Yes}}{\leftrightarrow}}$ New, R:Old $\overset{\text{Yes}}{\underset{\text{Yes}}{\leftrightarrow}}$ New, S:Old $\overset{\text{No}}{\underset{\text{No}}{\leftrightarrow}}$ New, W:Add, Z:Discontinued, F:Interchangeable by set, K:Q'ty Change

Copyright (C) YANMAR CO., LTD. All RightsReserved.

Fig.47. HYD.OIL PIMP & JOINT(PREVIOUS)

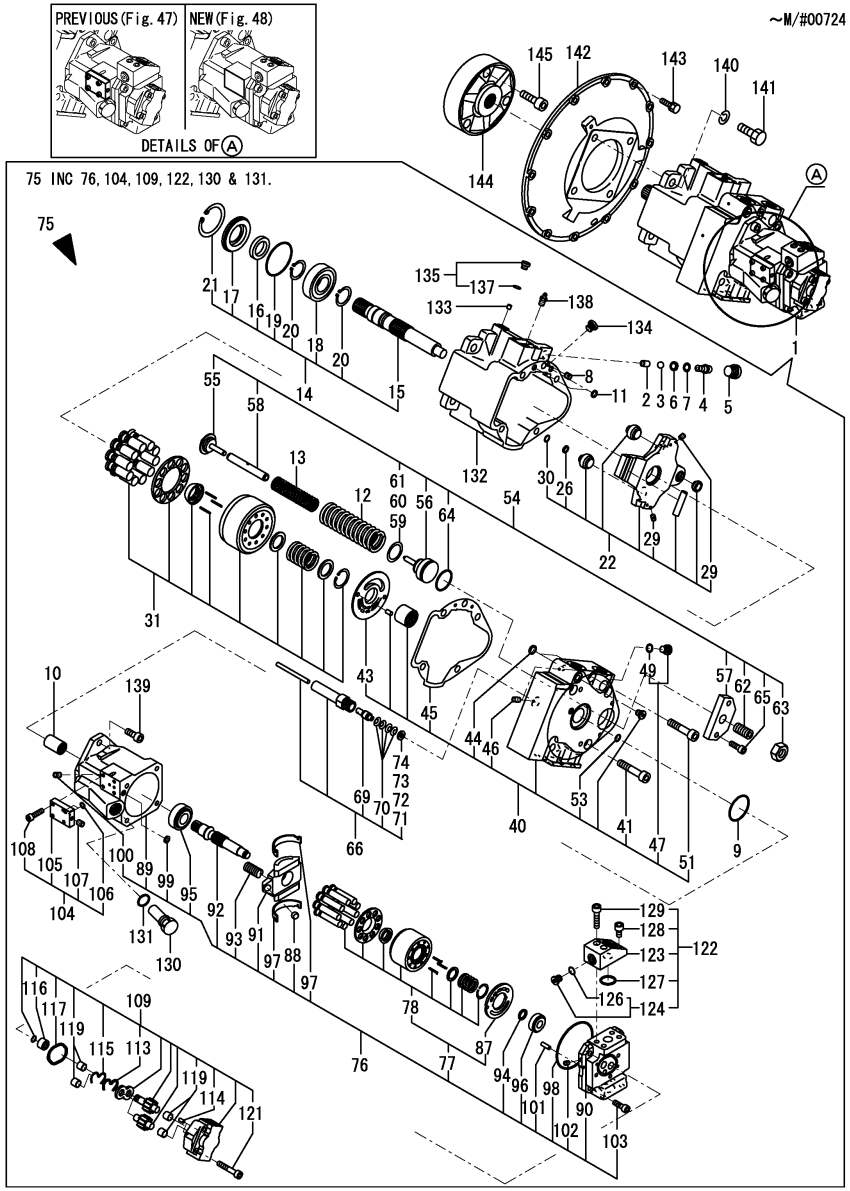

(A)=SV100(US) (D)=
(B)=SV100(AS) (E)=
(C)=SV100(NZ) (F)=

No.	Lev.	Parts No.	Description	Q'ty (A)	(B)	(C)	(D)	(E)	(F)	I	R
1	1	172499-73100	PUMP ASSY	1	1	1					3
2	2	172499-70600	BUSH	1	1	1					
3	2	172499-70610	BALL	1	1	1					
4	2	172499-70620	PLUG	1	1	1					
5	2	172499-70630	PLUG	1	1	1					
6	2	172499-70640	PACKING	1	1	1					
7	2	172499-70650	SHIM	1	1	1					
8	2	172499-70660	PLUG	1	1	1					
9	2	172499-70670	O-RING	1	1	1					
10	2	172499-70680	COUPLING	1	1	1					
11	2	172499-70690	RING	2	2	2					
12	2	172499-70700	SPRING	1	1	1					
13	2	172499-70710	SPRING	1	1	1					
14	2	172499-71300	SHAFT ASSY	1	1	1					
15	3	172499-71450	SHAFT	1	1	1					
16	3	172187-73240	SEAL, OIL	1	1	1					
17	3	172187-73220	CASE, SEAL	1	1	1					
18	3	172187-73230	BEARING,	1	1	1					
19	3	172187-73250	O-RING	1	1	1					
20	3	22242-000350	RING, 35	2	2	2					
21	3	22252-000800	RING, 80	1	1	1					
22	2	172499-71310	SWASH PLATE ASSY	1	1	1					
26	3	172499-71500	RING	1	1	1					
29	3	172141-74720	PLUG	2	2	2					
30	3	24315-000110	O-RING, 1BP11.0	1	1	1					
31	2	172499-71320	ROTARY GROUP	1	1	1					
40	2	172499-71330	COVER ASSY	1	1	1					
41	3	172499-71490	BOLT,14X70HEX SOCKET	4	4	4					
43	3	172499-71570	PLATE	1	1	1					
44	3	172499-71580	RING	2	2	2					
45	3	172499-71590	PACKING	1	1	1					
46	3	172164-73650	PLUG, M6	2	2	2					
47	3	172142-74600	PLUG	2	2	2					
49	4	24315-000110	O-RING, 1BP11.0	2	2	2					
51	3	172187-75630	BOLT 14X 65	1	1	1					
53	3	24315-000100	O-RING, 1BP10.0	2	2	2					
54	2	172499-71340	SEAT ASSY, SPRING	1	1	1					
55	3	172499-71600	SEAT, SPRING	1	1	1					
56	3	172499-71610	SEAT, SPRING	1	1	1					
57	3	172499-71620	COVER	1	1	1					
58	3	172499-71630	GUIDE	1	1	1					
59	3	172499-71640	SHIM	1	1	1					
60	3	172499-71650	SHIM	1	1	1					
61	3	172499-71660	SHIM	1	1	1					
62	3	172187-75720	SCREW, ADJUST	1	1	1					
63	3	172187-75750	NUT	1	1	1					
64	3	24311-000440	O-RING, 1AP44.0	1	1	1					
65	3	26450-100302	BOLT, M10X 30	2	2	2					
66	2	172499-71350	CONTROL PISTON ASSY	1	1	1					
69	3	172499-71690	PISTON	1	1	1					
70	3	172499-71700	SPRING	4	4	4					

Remarks
(1)INCLUDE OF REFER NO.77
(2)INCLUDE OF REFER NO.124
(3)INTERCHANGEABLE WITH
FIG.NO.48 REF. NO.1(172499-73101)

N:Old $\overset{\text{Yes}}{\underset{\text{No}}{\leftrightarrow}}$ New, Q:Old $\overset{\text{No}}{\underset{\text{Yes}}{\leftrightarrow}}$ New, R:Old $\overset{\text{Yes}}{\underset{\text{Yes}}{\leftrightarrow}}$ New, S:Old $\overset{\text{No}}{\underset{\text{No}}{\leftrightarrow}}$ New, W:Add, Z:Discontinued, F:Interchangeable by set, K:Q'ty Change

++ CONTINUE ++

Copyright (C) YANMAR CO., LTD. All RightsReserved.

Fig.47. HYD.OIL PIMP & JOINT(PREVIOUS)

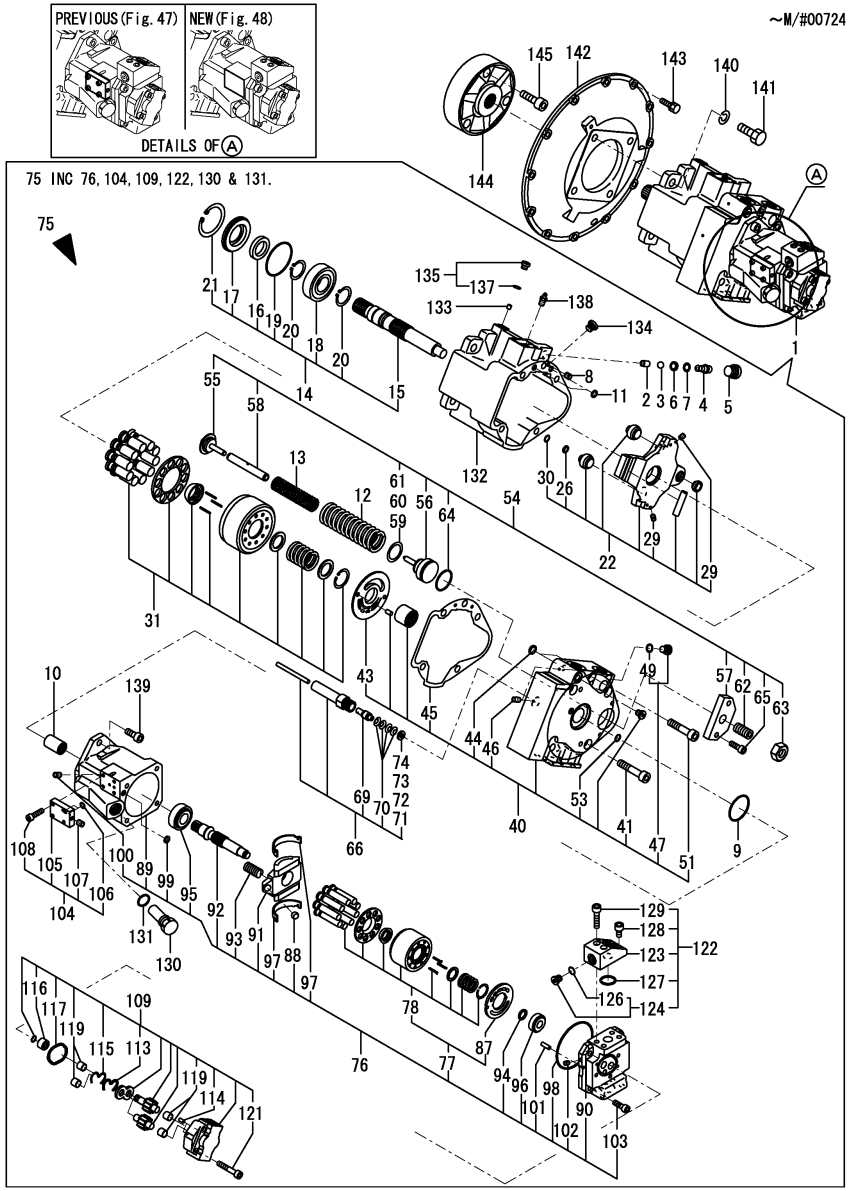

(A)=SV100(US)
(B)=SV100(AS)
(C)=SV100(NZ)
(D)=
(E)=
(F)=

No.	Lev.	Parts No.	Description	Q'ty (A)	(B)	(C)	(D)	(E)	(F)	I	R
71	3	172499-71710	PIECE, DISTANCE	1	1	1					
72	3	172499-71720	PIECE, DISTANCE	1	1	1					
73	3	172499-71730	PIECE, DISTANCE	1	1	1					
74	3	172499-71740	PIECE, DISTANCE	1	1	1					
75	2	172499-71360	P3 PISTON PUNP	1	1	1					
76	3	172499-71380	P3 PISTON POUP	1	1	1					
77	4	172499-71390	ROTARY GROUP	1	1	1					
78	5	172499-71400	ROTARY GROUP	1	1	1					1
87	5	172499-71910	PLATE	1	1	1					1
88	4	172499-71770	BALL	1	1	1					
89	4	172499-71780	HOUSING, PUMP	1	1	1					
90	4	172499-71790	PLATE	1	1	1					
91	4	172499-71800	SWASH PLATE	1	1	1					
92	4	172499-71810	SHAFT, DRIVE	1	1	1					
93	4	172499-71820	SPRING	1	1	1					
94	4	172499-71830	SHIM, ADJUSTING	1	1	1					
95	4	172499-71840	BEARING	1	1	1					
96	4	172499-71850	BEARING	1	1	1					
97	4	172499-71860	SHELL	2	2	2					
98	4	172499-71870	O-RING	1	1	1					
99	4	172499-71880	RING	1	1	1					
100	4	172499-71890	PLUG	1	1	1					
101	4	172499-71900	PIN	1	1	1					
102	4	172164-73650	PLUG, M6	1	1	1					
103	4	26450-100302	BOLT, M10X 30	4	4	4					
104	3	172499-71410	PLATE ASSY	1	1	1					
105	4	172499-70500	PLATE	1	1	1					
106	4	172499-70510	O-RING	2	2	2					
107	4	172164-73650	PLUG, M6	1	1	1					
108	4	26450-060222	BOLT, M6X 22	4	4	4					
109	3	172499-71420	GEAR PUNP,6.5	1	1	1					
113	4	172649-72750	SQUARE RING	1	1	1					
114	4	172141-73240	PIN, PARALLEL	2	2	2					
115	4	172165-73850	RING, BACK UP	1	1	1					
116	4	172164-73870	COUPLING	1	1	1					
117	4	172165-73870	O-RING	1	1	1					
119	4	172164-73960	METAL	4	4	4					
121	4	26450-080452	BOLT, M8X 45	4	4	4					
122	3	172499-71430	FLANGE ASSY	1	1	1					
123	4	172499-70550	FLANGE	1	1	1					
124	4	172142-74600	PLUG	1	1	1					
126	5	24315-000110	O-RING, 1BP11.0	1	1	1					2
127	4	24325-000300	O-RING, 1BG30.0	1	1	1					
128	4	26450-100202	BOLT, M10X 20	2	2	2					
129	4	26450-100452	BOLT, M10X 45	2	2	2					
130	3	172499-71750	PLUG	1	1	1					
131	3	172499-71760	O-RING	1	1	1					
132	2	172499-71370	HOUSING	1	1	1					
133	2	172147-73150	ORIFICE	1	1	1					
134	2	172649-73680	PLUG	1	1	1					
135	2	172142-74590	PLUG	1	1	1					

Remarks
(1)INCLUDE OF REFER NO.77
(2)INCLUDE OF REFER NO.124
(3)INTERCHANGEABLE WITH
FIG.NO.48 REF. NO.1(172499-73101)

N:Old $\overset{\text{Yes}}{\underset{\text{No}}{\leftrightarrow}}$ New, Q:Old $\overset{\text{No}}{\underset{\text{Yes}}{\leftrightarrow}}$ New, R:Old $\overset{\text{Yes}}{\underset{\text{Yes}}{\leftrightarrow}}$ New, S:Old $\overset{\text{No}}{\underset{\text{No}}{\leftrightarrow}}$ New, W:Add, Z:Discontinued, F:Interchangeable by set, K:Q'ty Change

++ CONTINUE ++

Copyright (C) YANMAR CO., LTD. All RightsReserved.

Fig.47. HYD.OIL PIMP & JOINT(PREVIOUS)

(A)=SV100(US) (D)=
(B)=SV100(AS) (E)=
(C)=SV100(NZ) (F)=

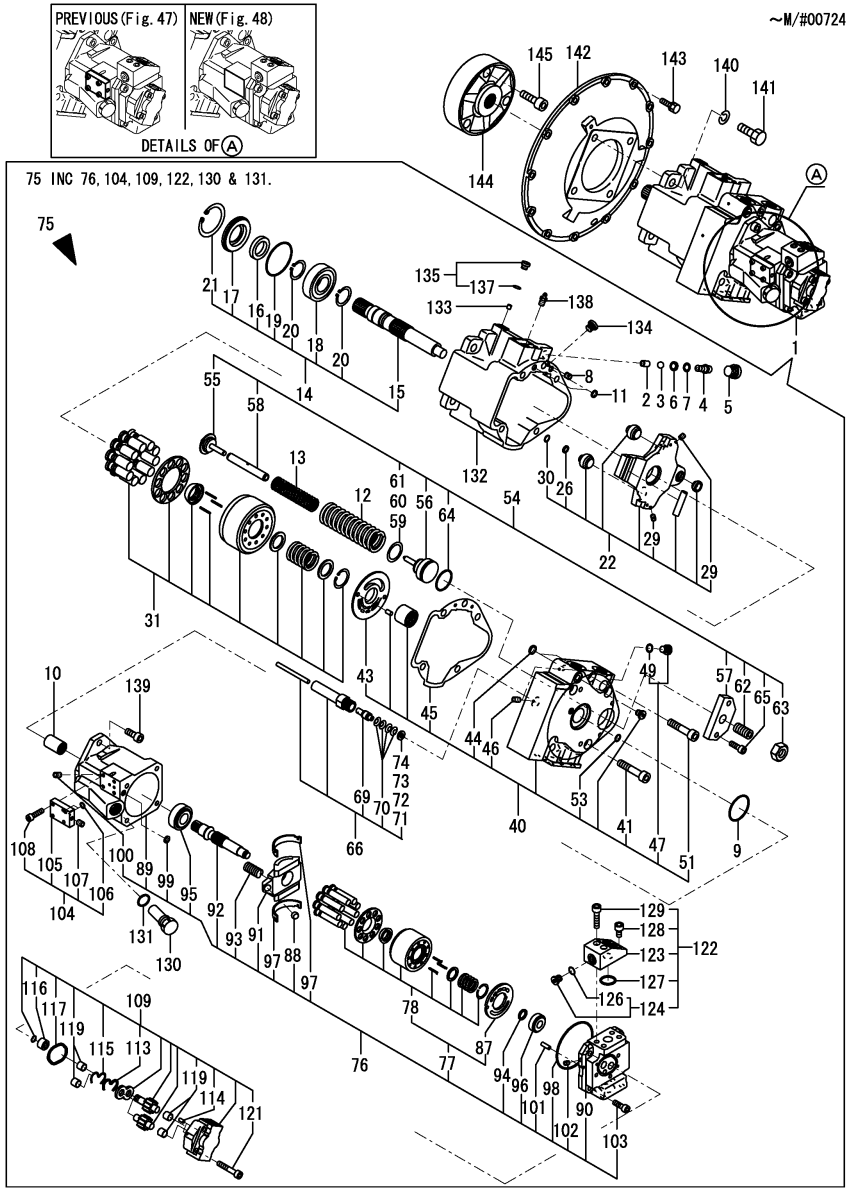

No.	Lev.	Parts No.	Description	Q'ty (A)	(B)	(C)	(D)	(E)	(F)	I	R
137	3	24315-000080	O-RING, 1BP8.0	1	1	1					
138	2	172456-75430	PLUG	1	1	1					
139	2	26450-120302	BOLT, M12X 30	2	2	2					
140	1	22217-160000	WASHER, SPRING 16	4	4	4					
141	1	26116-160452	BOLT, M16X 45 PLATED	4	4	4					
142	1	172187-71100	COVER, FLYWHEEL	1	1	1					
143	1	26013-100302	BOLT, M10X 30	12	12	12					
144	1	172499-71200	COUPLING	1	1	1					
145	1	172187-71210	BOLT 14X 50	3	3	3					

Remarks
(1)INCLUDE OF REFER NO.77
(2)INCLUDE OF REFER NO.124
(3)INTERCHANGEABLE WITH
FIG.NO.48 REF. NO.1(172499-73101)

N:Old $\frac{\text{Yes}}{\text{No}}$ New, Q:Old $\frac{\text{No}}{\text{Yes}}$ New, R:Old $\frac{\text{Yes}}{\text{Yes}}$ New, S:Old $\frac{\text{No}}{\text{No}}$ New, W:Add, Z:Discontinued, F:Interchangeable by set, K:Q'ty Change

Copyright (C) YANMAR CO., LTD. All RightsReserved.

Fig.48. HYD.OIL PIMP & JOINT(NEW)

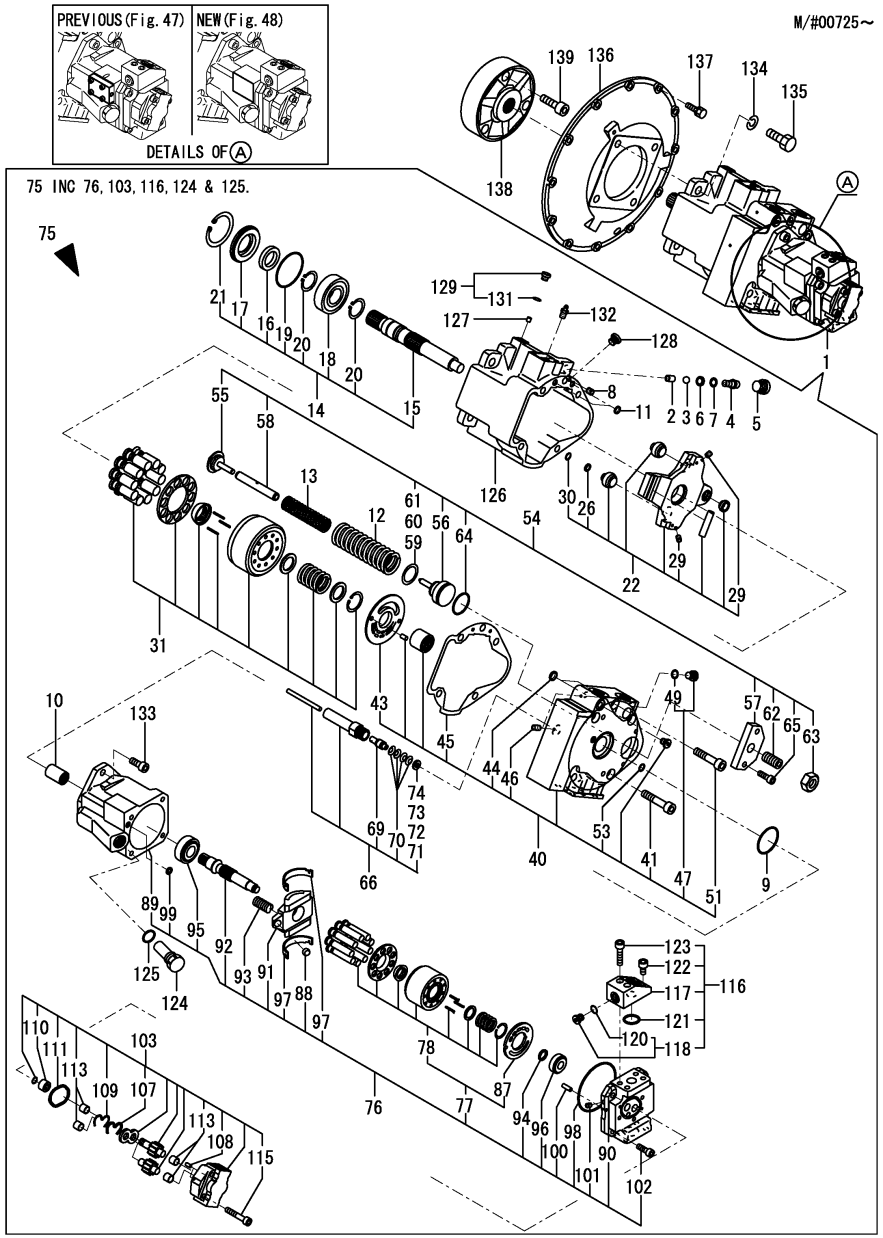

(A)=SV100(US)
(B)=SV100(AS)
(C)=SV100(NZ)
(D)=
(E)=
(F)=

No.	Lev.	Parts No.	Description	Q'ty (A)	(B)	(C)	(D)	(E)	(F)	I	R
1	1	172499-73101	PUMP ASSY	1	1	1					
2	2	172499-70600	BUSH	1	1	1					
3	2	172499-70610	BALL	1	1	1					
4	2	172499-70620	PLUG	1	1	1					
5	2	172499-70630	PLUG	1	1	1					
6	2	172499-70640	PACKING	1	1	1					
7	2	172499-70650	SHIM	1	1	1					
8	2	172499-70660	PLUG	1	1	1					
9	2	172499-70670	O-RING	1	1	1					
10	2	172499-70680	COUPLING	1	1	1					
11	2	172499-70690	RING	2	2	2					
12	2	172499-70701	SPRING	1	1	1					
13	2	172499-70711	SPRING	1	1	1					
14	2	172499-71300	SHAFT ASSY	1	1	1					
15	3	172499-71450	SHAFT	1	1	1					
16	3	172187-73240	SEAL, OIL	1	1	1					
17	3	172187-73220	CASE, SEAL	1	1	1					
18	3	172187-73230	BEARING,	1	1	1					
19	3	172187-73250	O-RING	1	1	1					
20	3	22242-000350	RING, 35	2	2	2					
21	3	22252-000800	RING, 80	1	1	1					
22	2	172499-71310	SWASH PLATE ASSY	1	1	1					
26	3	172499-71500	RING	1	1	1					
29	3	172141-74720	PLUG	2	2	2					
30	3	24315-000110	O-RING, 1BP11.0	1	1	1					
31	2	172499-71320	ROTARY GROUP	1	1	1					
40	2	172499-71330	COVER ASSY	1	1	1					
41	3	172499-71490	BOLT,14X70HEX SOCKET	4	4	4					
43	3	172499-71570	PLATE	1	1	1					
44	3	172499-71580	RING	2	2	2					
45	3	172499-71590	PACKING	1	1	1					
46	3	172164-73650	PLUG, M6	2	2	2					
47	3	172142-74600	PLUG	2	2	2					
49	4	24315-000110	O-RING, 1BP11.0	2	2	2					
51	3	172187-75630	BOLT 14X 65	1	1	1					
53	3	24315-000100	O-RING, 1BP10.0	2	2	2					
54	2	172499-71341	SEAT ASSY, SPRING	1	1	1					
55	3	172499-71600	SEAT, SPRING	1	1	1					
56	3	172499-71611	SEAT, SPRING	1	1	1					
57	3	172499-71620	COVER	1	1	1					
58	3	172499-71630	GUIDE	1	1	1					
59	3	172499-71640	SHIM	1	1	1					
60	3	172499-71650	SHIM	1	1	1					
61	3	172499-71660	SHIM	1	1	1					
62	3	172187-75720	SCREW, ADJUST	1	1	1					
63	3	172187-75750	NUT	1	1	1					
64	3	24311-000440	O-RING, 1AP44.0	1	1	1					
65	3	26450-100302	BOLT, M10X 30	2	2	2					
66	2	172499-71350	CONTROL PISTON ASSY	1	1	1					
69	3	172499-71690	PISTON	1	1	1					
70	3	172499-71700	SPRING	4	4	4					

Remarks
(1)INCLUDE OF REFER NO.77
(2)INCLUDE OF REFER NO.118

N:Old $\xleftarrow[\text{No}]{\text{Yes}}$ New, Q:Old $\xleftarrow[\text{Yes}]{\text{No}}$ New, R:Old $\xleftarrow[\text{Yes}]{\text{Yes}}$ New, S:Old $\xleftarrow[\text{No}]{\text{No}}$ New, W:Add, Z:Discontinued, F:Interchangeable by set, K:Q'ty Change

++ CONTINUE ++

Copyright (C) YANMAR CO., LTD. All RightsReserved.

Fig.48. HYD.OIL PIMP & JOINT(NEW)

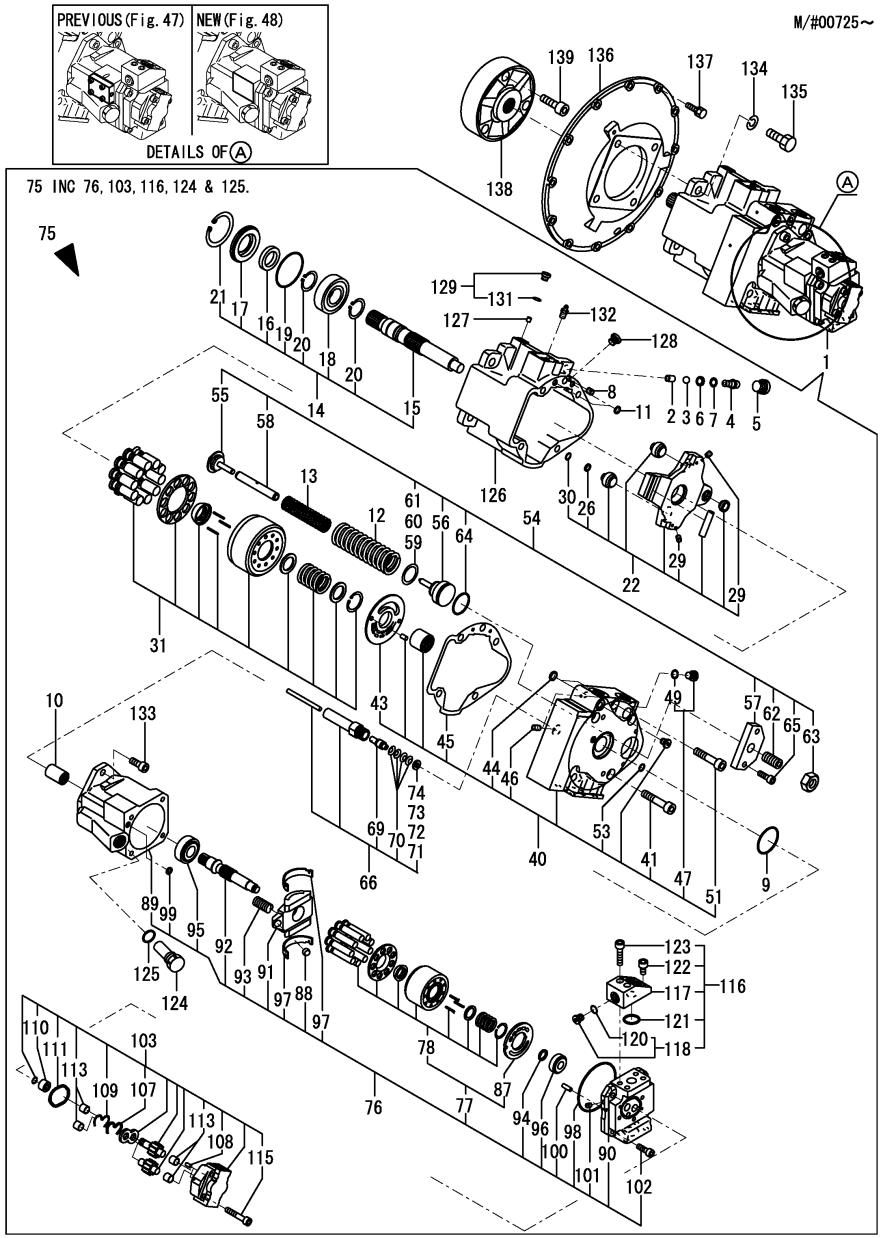

(A)=SV100(US)
(B)=SV100(AS)
(C)=SV100(NZ)
(D)=
(E)=
(F)=

No.	Lev.	Parts No.	Description	Q'ty (A)	(B)	(C)	(D)	(E)	(F)	I	R
71	3	172499-71710	PIECE, DISTANCE	1	1	1					
72	3	172499-71720	PIECE, DISTANCE	1	1	1					
73	3	172499-71730	PIECE, DISTANCE	1	1	1					
74	3	172499-71740	PIECE, DISTANCE	1	1	1					
75	2	172499-71361	P3 PISTON PUNP	1	1	1					
76	3	172499-71381	P3 PISTON POUP	1	1	1					
77	4	172499-71390	ROTARY GROUP	1	1	1					
78	5	172499-71400	ROTARY GROUP	1	1	1					1
87	5	172499-71910	PLATE	1	1	1					1
88	4	172499-71770	BALL	1	1	1					
89	4	172499-71781	HOUSING, PUMP	1	1	1					
90	4	172499-71790	PLATE	1	1	1					
91	4	172499-71800	SWASH PLATE	1	1	1					
92	4	172499-71810	SHAFT, DRIVE	1	1	1					
93	4	172499-71820	SPRING	1	1	1					
94	4	172499-71830	SHIM, ADJUSTING	1	1	1					
95	4	172499-71840	BEARING	1	1	1					
96	4	172499-71850	BEARING	1	1	1					
97	4	172499-71860	SHELL	2	2	2					
98	4	172499-71870	O-RING	1	1	1					
99	4	172499-71880	RING	1	1	1					
100	4	172499-71900	PIN	1	1	1					
101	4	172164-73650	PLUG, M6	2	2	2					
102	4	26450-100302	BOLT, M10X 30	4	4	4					
103	3	172499-71420	GEAR PUNP,6.5	1	1	1					
107	4	172649-72750	SQUARE RING	1	1	1					
108	4	172141-73240	PIN, PARALLEL	2	2	2					
109	4	172165-73850	RING, BACK UP	1	1	1					
110	4	172164-73870	COUPLING	1	1	1					
111	4	172165-73870	O-RING	1	1	1					
113	4	172164-73960	METAL	4	4	4					
115	4	26450-080452	BOLT, M8X 45	4	4	4					
116	3	172499-71430	FLANGE ASSY	1	1	1					
117	4	172499-70550	FLANGE	1	1	1					
118	4	172142-74600	PLUG	1	1	1					
120	5	24315-000110	O-RING, 1BP11.0	1	1	1					2
121	4	24325-000300	O-RING, 1BG30.0	1	1	1					
122	4	26450-100202	BOLT, M10X 20	2	2	2					
123	4	26450-100452	BOLT, M10X 45	2	2	2					
124	3	172499-71750	PLUG	1	1	1					
125	3	172499-71760	O-RING	1	1	1					
126	2	172499-71370	HOUSING	1	1	1					
127	2	172147-73150	ORIFICE	1	1	1					
128	2	172649-73680	PLUG	1	1	1					
129	2	172142-74590	PLUG	1	1	1					
131	3	24315-000080	O-RING, 1BP8.0	1	1	1					
132	2	172456-75430	PLUG	1	1	1					
133	2	26450-120302	BOLT, M12X 30	2	2	2					
134	1	22217-160000	WASHER, SPRING 16	4	4	4					
135	1	26116-160452	BOLT, M16X 45 PLATED	4	4	4					
136	1	172187-71100	COVER, FLYWHEEL	1	1	1					

Remarks
(1)INCLUDE OF REFER NO.77
(2)INCLUDE OF REFER NO.118

N:Old $\overset{\text{Yes}}{\underset{\text{No}}{\leftrightarrow}}$ New, Q:Old $\overset{\text{No}}{\underset{\text{Yes}}{\leftrightarrow}}$ New, R:Old $\overset{\text{Yes}}{\underset{\text{Yes}}{\leftrightarrow}}$ New, S:Old $\overset{\text{No}}{\underset{\text{No}}{\leftrightarrow}}$ New, W:Add, Z:Discontinued, F:Interchangeable by set, K:Q'ty Change

++ CONTINUE ++

Copyright (C) YANMAR CO., LTD. All RightsReserved.

Fig.48. HYD.OIL PIMP & JOINT(NEW)

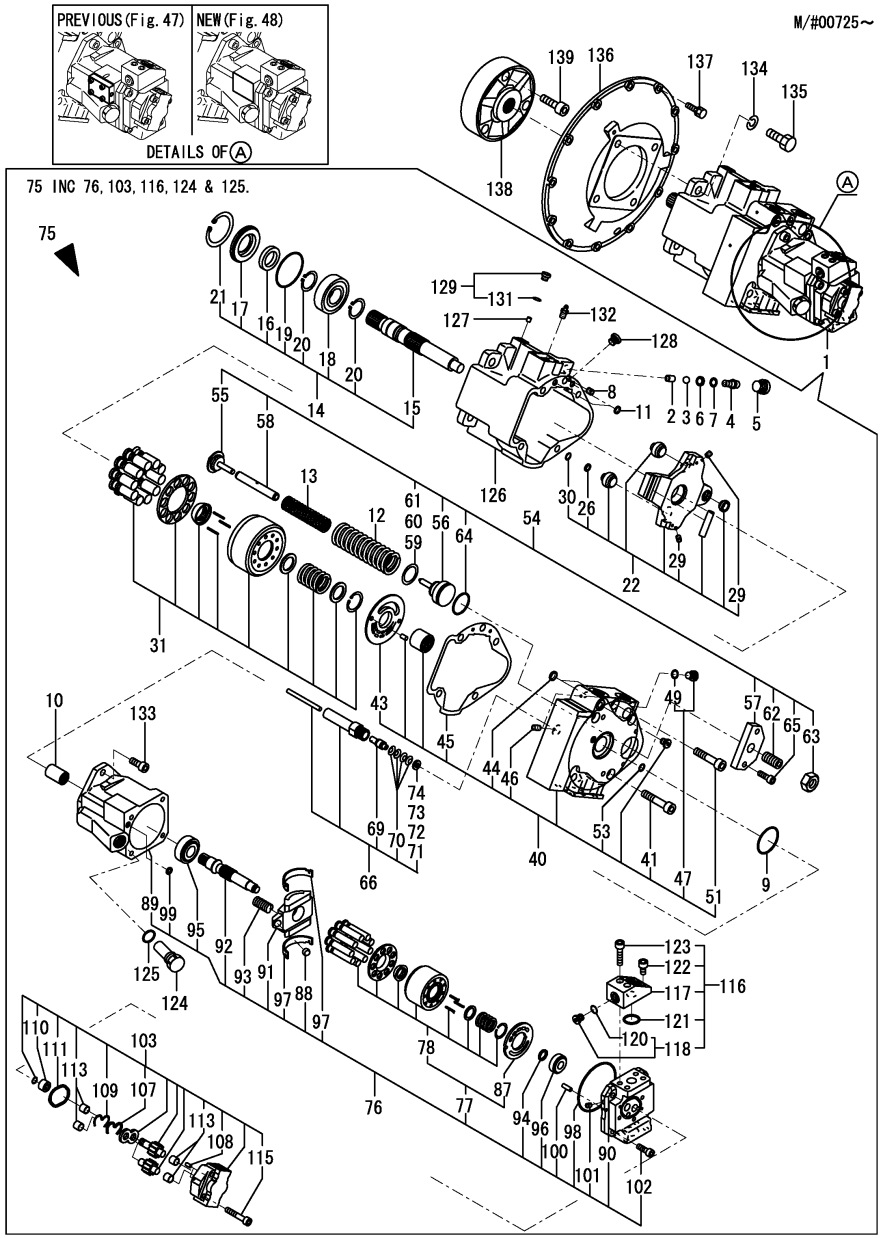

(A)=SV100(US)
(B)=SV100(AS)
(C)=SV100(NZ)
(D)=
(E)=
(F)=

No.	Lev.	Parts No.	Description	Q'ty (A)	(B)	(C)	(D)	(E)	(F)	I	R
137	1	26013-100302	BOLT, M10X 30	12	12	12					
138	1	172499-71200	COUPLING	1	1	1					
139	1	172187-71210	BOLT 14X 50	3	3	3					

Remarks
(1)INCLUDE OF REFER NO.77
(2)INCLUDE OF REFER NO.118

N:Old ⇄(Yes/No) New, Q:Old ⇄(No/Yes) New, R:Old ⇄(Yes/Yes) New, S:Old ⇄(No/No) New, W:Add, Z:Discontinued, F:Interchangeable by set, K:Q'ty Change

Copyright (C) YANMAR CO., LTD. All RightsReserved.

Fig.49. BOOM CYLINDER

(A)=SV100(US) (D)=
(B)=SV100(AS) (E)=
(C)=SV100(NZ) (F)=

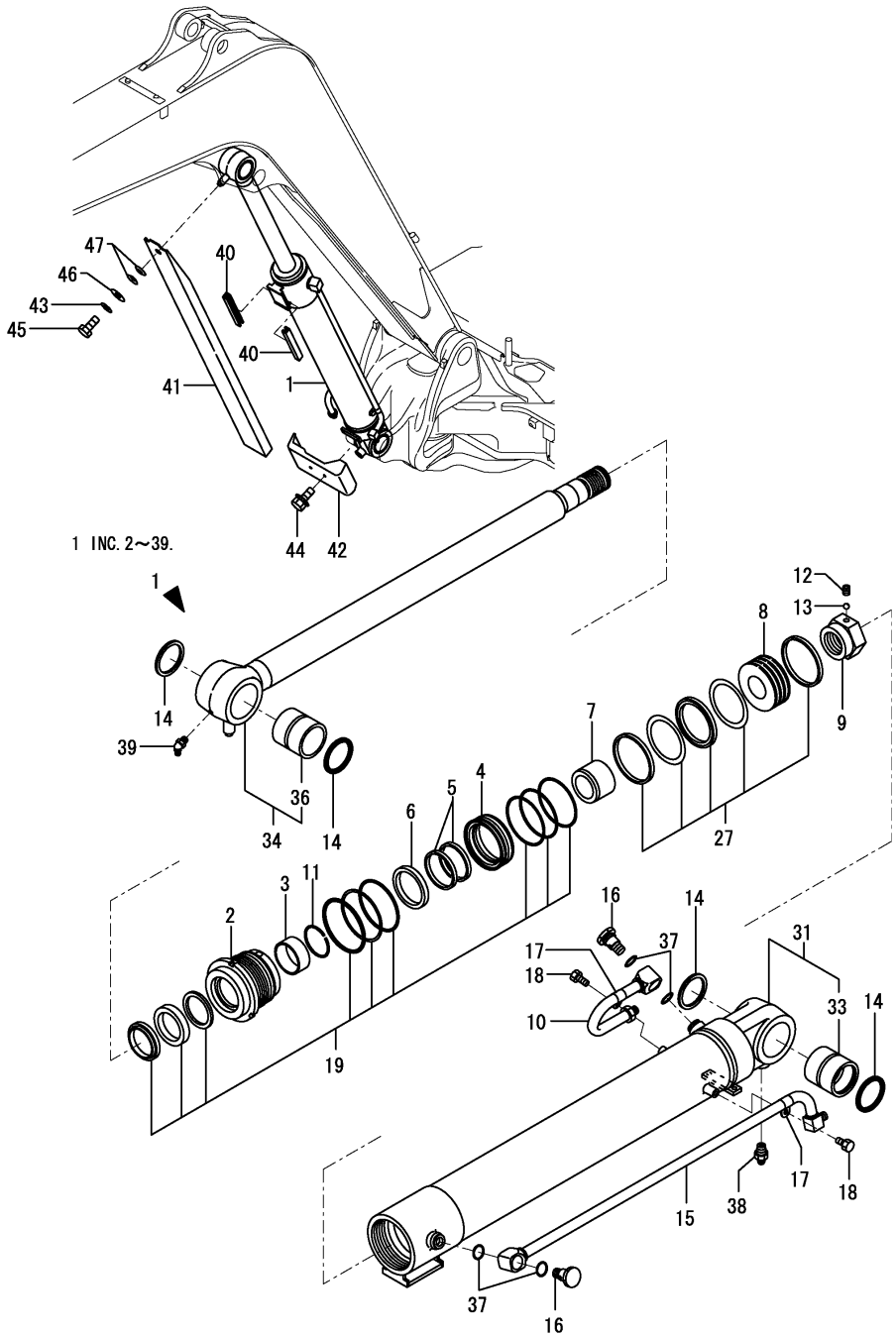

No.	Lev.	Parts No.	Description	Q'ty (A)	(B)	(C)	(D)	(E)	(F)	I	R
1	1	172499-72100	CYLINDER, BOOM	1	1	1					
1-1	1	172499-72100-1	CYLINDER, BOOM	1	1	1				S	
	(A=M/#01231)	(B=M/#01231)	(C=M/#01231)								
2	2	172499-72130	HEAD, CYLINDER	1	1	1					
3	2	172499-72140	BUSH	1	1	1					
4	2	172499-72180	HOLDER	1	1	1					
5	2	172499-72190	SEAL, CUSHION	1	1	1					
6	2	172499-72200	COLLAR	1	1	1					
7	2	172499-72220	BEARING, CUSHION	1	1	1					
8	2	172499-72230	PISTON	1	1	1					
9	2	172499-72260	NUT	1	1	1					
10	2	172499-72290	PIPE ASSY	1	1	1					
10-1	2	172499-72290-1	PIPE ASSY	1	1	1				S	
	(A=M/#01231)	(B=M/#01231)	(C=M/#01231)								
11	2	172162-72620	RING,SNAP	1	1	1					
12	2	172162-72680	SCREW, SETTING	1	1	1					
13	2	172162-72690	BALL,STEEL	1	1	1					
14	2	172162-72700	SEAL, DUST	4	4	4					
15	2	172499-72850	PIPE ASSY	1	1	1					
15-1	2	172499-72850-1	PIPE ASSY	1	1	1				S	
	(A=M/#01231)	(B=M/#01231)	(C=M/#01231)								
16	2	172499-72860	PULG	2	2	2					
17	2	172499-72870	HOLDER	2	2	2					
18	2	172499-72880	BOLT ASSY	2	2	2					
19	2	172499-72900	SEAL SET, HEAD	1	1	1					
27	2	172499-72910	SEAL SET, PISTON	1	1	1					
31	2	172499-72920	TUBE ASSY, BOOM	1	1	1					
31-1	2	172499-72920-1	TUBE ASSY, BOOM	1	1	1				S	
	(A=M/#01231)	(B=M/#01231)	(C=M/#01231)								
33	3	172499-72270	PIN BUSU	1	1	1					
34	2	172499-72930	ROD,BOOM	1	1	1					
36	3	172499-72280	PIN BUSU	1	1	1					
37	2	24315-000260	O-RING, 1BP26.0	4	4	4					
38	2	24761-020000	NIPPLE, GREASE PT1/8	1	1	1					
39	2	24761-040000	NIPPLE, GREASE B	1	1	1					
40	1	172162-61770	GUIDE, SLIDE	2	2	2					
41	1	172187-72910-1	COVER, SLIDE	1	1	1					
41-1	1	172187-72910-2	COVER, SLIDE	1	1	1				S	
	(A=M/#01231)	(B=M/#01231)	(C=M/#01231)								
42	1	172499-72990	GUARD ASSY	1	1	1					
42-1	1	172499-72990-1	GUARD ASSY	1	1	1				S	
	(A=M/#01231)	(B=M/#01231)	(C=M/#01231)								
43	1	22217-100000	WASHER, SPRING 10	1	1	1					
44	1	26014-100202	BOLT, M10X 20	2	2	2					
45	1	26116-100202	BOLT, M10X 20 PLATED	1	1	1					
46	1	933147-03400	WASHER, BRAKE ARM	1	1	1					
47	1	933168-14170	SPRING	2	2	2					

N:Old $\overset{\text{Yes}}{\underset{\text{No}}{\leftrightarrow}}$ New, Q:Old $\overset{\text{No}}{\underset{\text{Yes}}{\leftrightarrow}}$ New, R:Old $\overset{\text{Yes}}{\underset{\text{Yes}}{\leftrightarrow}}$ New, S:Old $\overset{\text{No}}{\underset{\text{No}}{\leftrightarrow}}$ New, W:Add, Z:Discontinued, F:Interchangeable by set, K:Q'ty Change

Copyright (C) YANMAR CO., LTD. All RightsReserved.

Fig.50. ARM CYLINDER

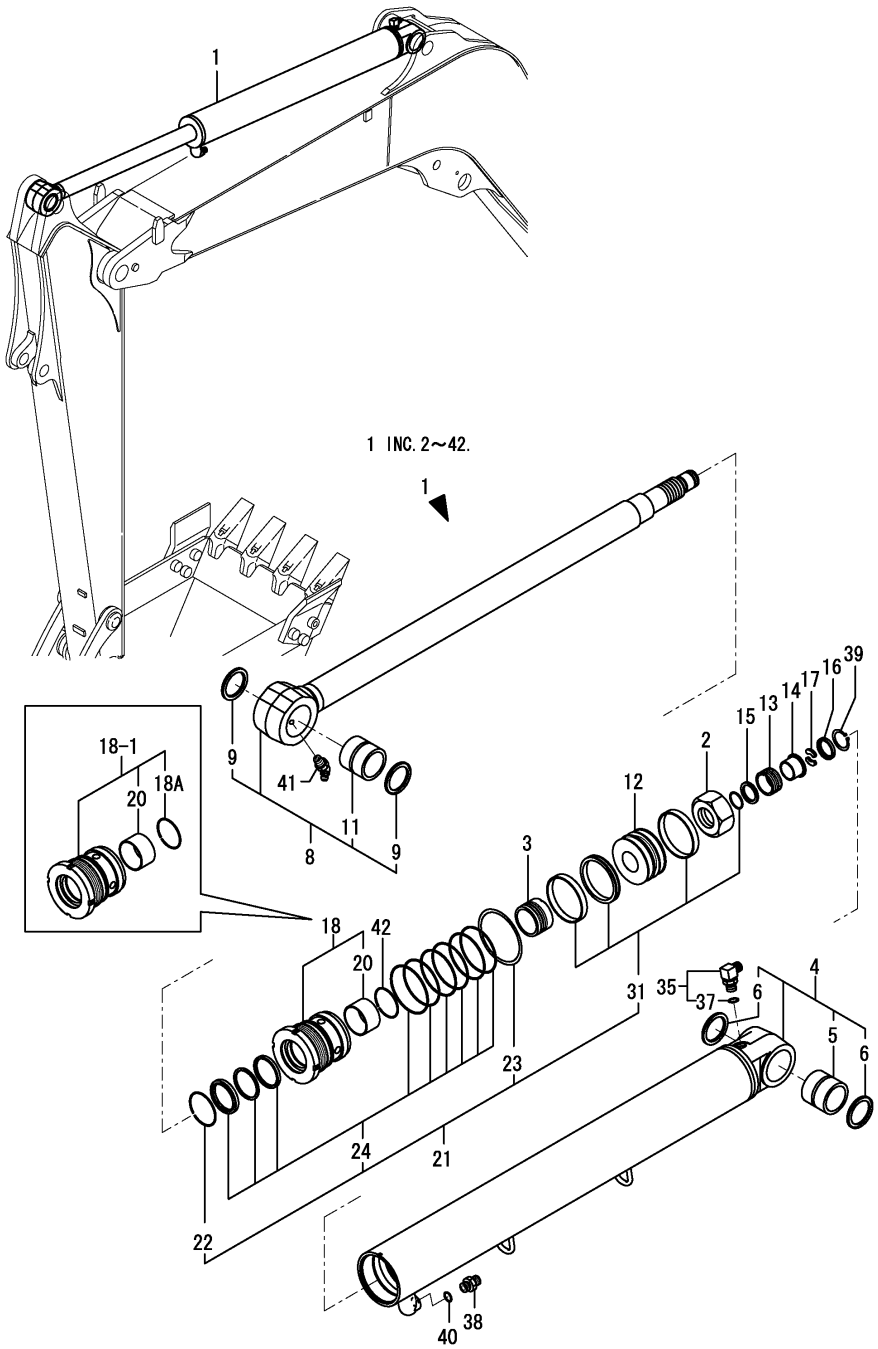

(A)=SV100(US) (D)=
(B)=SV100(AS) (E)=
(C)=SV100(NZ) (F)=

No.	Lev.	Parts No.	Description	Q'ty (A)	(B)	(C)	(D)	(E)	(F)	I	R
1	1	172499-72800	CYLINDER, ARM	1	1	1					
1-1	1	172499-72801	CYLINDER, ARM	1	1	1				N	
	(A=M/#00853)	(B=M/#00853)	(C=M/#00853)								
1-2	1	172499-72801-1	CYLINDER, ARM	1	1	1				S	
	(A=M/#01231)	(B=M/#01231)	(C=M/#01231)								
2	2	172020-11540	NUT	1	1	1					
3	2	172478-72190	PLUNGER 72,CUSHION	1	1	1					
4	2	172499-72310	TUBE, ARM	1	1	1					
4-1	2	172499-72310-1	TUBE, ARM	1	1	1				S	
	(A=M/#01231)	(B=M/#01231)	(C=M/#01231)								
5	3	172020-10610	BUSH 60 75 83	1	1	1					
6	3	172020-10620	SEAL, DUST	2	2	2					
8	2	172499-72370	ROD ASSY,ARM	1	1	1					
9	3	172020-10620	SEAL, DUST	2	2	2					
11	3	172499-72410	BUSH,60 68 B	1	1	1					
12	2	172499-72430	PISTON 110 48	1	1	1					
13	2	172499-72440	PLUNGER,CUSHION 54	1	1	1					
14	2	172499-72450	COLLAR, 38.3 44	1	1	1					
15	2	172499-72460	SPACER, 39.3X4	1	1	1					
16	2	172499-72470	COVER, STOPPER	1	1	1					
17	2	172499-72480	STOPPER, 33	2	2	2					
18	2	172499-72570	HEAD ASSY,110 65	1	1	1					
18-1	2	172499-72571	HEAD ASSY,110 65	1	1	1				N	
	(A=M/#00853)	(B=M/#00853)	(C=M/#00853)								
18A	3	172445-72450	RING 77	1	1	1				W	
	(A=M/#00853)	(B=M/#00853)	(C=M/#00853)								
18A-1	3	172499-72490	SPRING RING 72	1	1	1				N	
	(A=M/#01032)	(B=M/#01032)	(C=M/#01032)								
20	3	24550-065400	BUSH, 65X40	1	1	1					
21	2	172499-72700	SEAL SET, 110X65	1	1	1					
22	3	172020-10380	RING 82,SPRING	1	1	1					
23	3	172162-72250	WASHER,LOCK	1	1	1					
24	3	172499-72710	SEAL SET, 110X65	1	1	1					
31	3	172499-72720	SEAL SET, PISTON	1	1	1					
35	2	172141-76900	CONNECTOR ASSY	1	1	1					
37	3	24315-000180	O-RING, 1BP18.0	1	1	1					
38	2	172112-77361	CONNECTOR	1	1	1					
39	2	22242-000380	RING, 38	1	1	1					
40	2	24315-000180	O-RING, 1BP18.0	1	1	1					
41	2	24761-040000	NIPPLE, GREASE B	1	1	1					
42	2	933126-00500	RING 72, SPRING	1	1	1				Z	
	(A=M/#00853)	(B=M/#00853)	(C=M/#00853)								

N:Old $\overset{\text{Yes}}{\underset{\text{No}}{\leftrightarrow}}$ New, Q:Old $\overset{\text{No}}{\underset{\text{Yes}}{\leftrightarrow}}$ New, R:Old $\overset{\text{Yes}}{\underset{\text{Yes}}{\leftrightarrow}}$ New, S:Old $\overset{\text{No}}{\underset{\text{No}}{\leftrightarrow}}$ New, W:Add, Z:Discontinued, F:Interchangeable by set, K:Q'ty Change

Copyright (C) YANMAR CO., LTD. All RightsReserved.

Fig.51. BUCKET CYLINDER

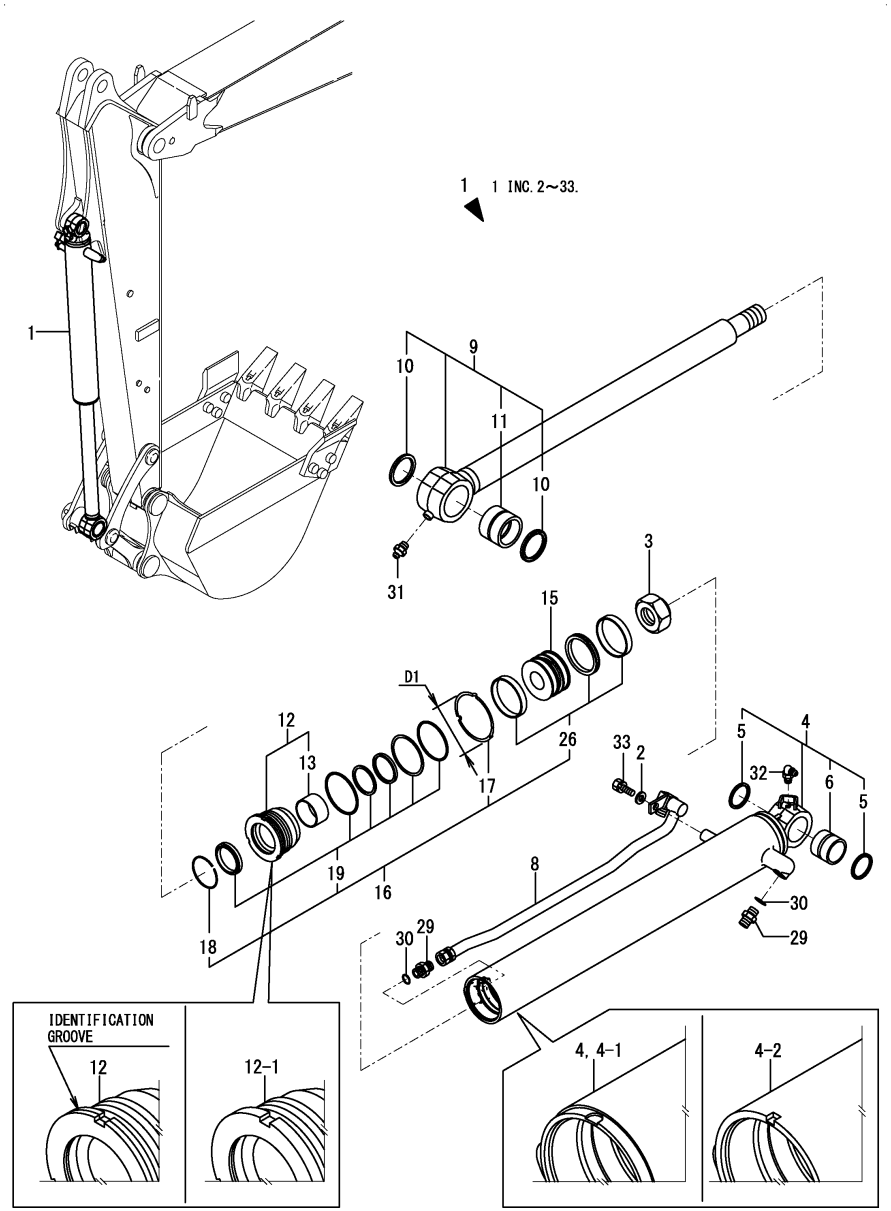

(A)=SV100(US) (D)=
(B)=SV100(AS) (E)=
(C)=SV100(NZ) (F)=

No.	Lev.	Parts No.	Description	Q'ty (A)	(B)	(C)	(D)	(E)	(F)	I	R
1	1	172499-72500	CYLINDER ASSY	1	1	1					
1-1	1	172499-72500-1	CYLINDER ASSY	1	1	1				S	
	(A=M/#01231)	(B=M/#01231)	(C=M/#01231)								
1-2	1	172499-72501-1	CYLINDER ASSY	1	1	1				N	
	(A=M/#01726)	(B=M/#01726)	(C=M/#01726)								
2	2	194145-04810	WASHER, 10	1	1	1					
3	2	172020-10810	NUT	1	1	1					
4	2	172499-72510	TUBE, BUCKET	1	1	1					
4-1	2	172499-72510-1	TUBE, BUCKET	1	1	1				S	
	(A=M/#01231)	(B=M/#01231)	(C=M/#01231)								
4-2	2	172499-72511	TUBE, BUCKET	1	1	1				F	1
	(A=M/#01726)	(B=M/#01726)	(C=M/#01726)								
5	3	172448-54120	SEAL, DUST	2	2	2					
6	3	172151-72591	BUSH	1	1	1					
8	2	172499-72540	TUBE, BUCKET	1	1	1					
8-1	2	172499-72540-1	TUBE, BUCKET	1	1	1				S	
	(A=M/#01231)	(B=M/#01231)	(C=M/#01231)								
9	2	172978-72540	ROD,BUCKET	1	1	1					
9-1	2	172978-72650	ROD ASSY,BUCKET Q	1	1	1				N	
	(A=M/#00778)	(B=M/#00778)	(C=M/#00778)								
10	3	172020-10620	SEAL, DUST	2	2	2					
11	3	172020-11030	BUSH, PIN	1	1	1					
12	2	172978-72570	HEAD 95 60	1	1	1					
12-1	2	172978-72571	HEAD ASSY 95 60	1	1	1				S	
	(A=M/#01726)	(B=M/#01726)	(C=M/#01726)								
13	3	172445-72480	BUSH, ROD	1	1	1					
15	2	172978-72590	PISTON 95	1	1	1					
16	2	172978-72610	SEAL SET, 95X60	1	1	1					
16-1	2	172978-72611	SEAL SET, 95X60	1	1	1				N	
	(A=M/#01726)	(B=M/#01726)	(C=M/#01726)								
16-2	2	172978-72612	SEAL SET, 95X60	1	1	1				S	
	(A=M/#01726)	(B=M/#01726)	(C=M/#01726)								
17	3	172444-72430	WASHER, LOCK	1	1	1					
17-1	3	172499-72980	WASHER,LOCK 95-110	1	1	1				N	2
	(A=M/#01726)	(B=M/#01726)	(C=M/#01726)								
17-2	3	172499-72981	WASHER,LOCK 95-114	1	1	1				S	2
	(A=M/#01726)	(B=M/#01726)	(C=M/#01726)								
18	3	172445-72450	RING, SPRING	1	1	1					
19	3	172978-72600	SEAL SET, HEAD 95X60	1	1	1					
26	3	172978-72620	SEAL SET, PISTON 95	1	1	1					
29	2	172112-77361	CONNECTOR	2	2	2					
30	2	24315-000180	O-RING, 1BP18.0	2	2	2					
31	2	24761-020000	NIPPLE, GREASE PT1/8	1	1	1					
32	2	24761-050000	NIPPLE, GREASE C	1	1	1					
33	2	26013-100252	BOLT, SPRING M10X 25	1	1	1					

Remarks
(1)Interchangeable by simultaneous replacement with No.12-1 & 17-2.
(2)D1(Outer Diameter)=No.17-1 : 115mm, No.17-2 : 119mm.

N:Old $\xleftrightarrow[\text{No}]{\text{Yes}}$ New, Q:Old $\xleftrightarrow[\text{Yes}]{\text{No}}$ New, R:Old $\xleftrightarrow[\text{Yes}]{\text{Yes}}$ New, S:Old $\xleftrightarrow[\text{No}]{\text{No}}$ New, W:Add, Z:Discontinued, F:Interchangeable by set, K:Q'ty Change

Copyright (C) YANMAR CO., LTD. All RightsReserved.

Fig.52. SWING CYLINDER

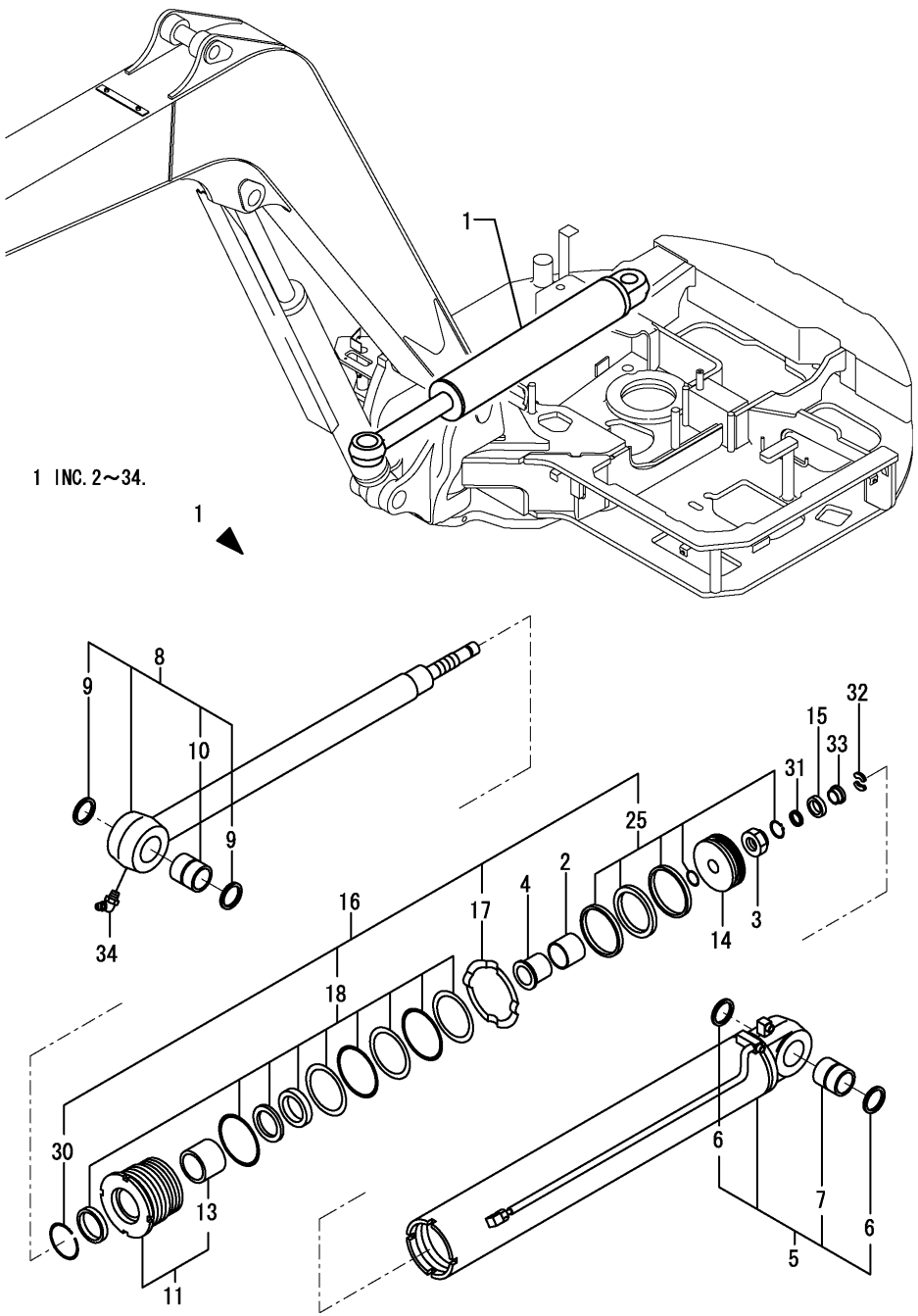

(A)=SV100(US) (D)=
(B)=SV100(AS) (E)=
(C)=SV100(NZ) (F)=

No.	Lev.	Parts No.	Description	Q'ty (A)	(B)	(C)	(D)	(E)	(F)	I	R
1	1	172020-11151-1	CYLINDER ASSY, SWING	1	1	1					
1-1	1	172020-11151-2	CYLINDER ASSY, SWING	1	1	1				S	
	(A=M/#00758)	(B=M/#00758)	(C=M/#00758)								
2	2	172020-10730	PLUNGER 64A,CUSHION	1	1	1					
3	2	172020-10810	NUT	1	1	1					
4	2	172020-10860	COLLAR, CUSHION	1	1	1					
5	2	172020-11161-1	TUBE ASSY, SWING	1	1	1					
5-1	2	172020-11161-2	TUBE ASSY, SWING	1	1	1				S	
	(A=M/#00758)	(B=M/#00758)	(C=M/#00758)								
5-2	2	172A21-72710	TUBE ASSY, SWING	1	1	1				N	
	(A=M/#00778)	(B=M/#00778)	(C=M/#00778)								
6	3	172020-10620	SEAL, DUST	2	2	2					
7	3	172020-11230	BUSH 60 63 A	1	1	1					
8	2	172020-11250	ROD,SWING	1	1	1					
8-1	2	172A21-72720	ROD ASSY,SWING	1	1	1				N	
	(A=M/#00778)	(B=M/#00778)	(C=M/#00778)								
9	3	172020-10620	SEAL, DUST	2	2	2					
10	3	172020-11280	BUSH 60 60 B	1	1	1					
11	2	172020-11300	HEAD CMP 120 60	1	1	1					
13	3	172445-72480	ROD BUSH 60 35	1	1	1					
14	2	172020-11320	PISTON 120	1	1	1					
15	2	172020-11340	RING 44-1.6	1	1	1					
16	2	172020-11690	SEAL SET, CYLINDER	1	1	1					
17	3	172020-11350	ROCK WASHER 120	1	1	1					
18	3	172020-11700	SEAL SET, HEAD	1	1	1					
25	3	172020-11710	SEAL SET, PISTON	1	1	1					
30	3	172445-72450	RING 77	1	1	1					
31	2	172423-72530	SPACER	1	1	1					
32	2	172423-72540	STOPPER	2	2	2					
33	2	172423-72520	COLLAR, CUSHION	1	1	1					
34	2	24761-050000	NIPPLE, GREASE C	1	1	1					

N:Old $\frac{\text{Yes}}{\text{No}}$ New, Q:Old $\frac{\text{No}}{\text{Yes}}$ New, R:Old $\frac{\text{Yes}}{\text{Yes}}$ New, S:Old $\frac{\text{No}}{\text{No}}$ New, W:Add, Z:Discontinued, F:Interchangeable by set, K:Q'ty Change

Copyright (C) YANMAR CO., LTD. All RightsReserved.

Fig.53. BLADE CYLINDER

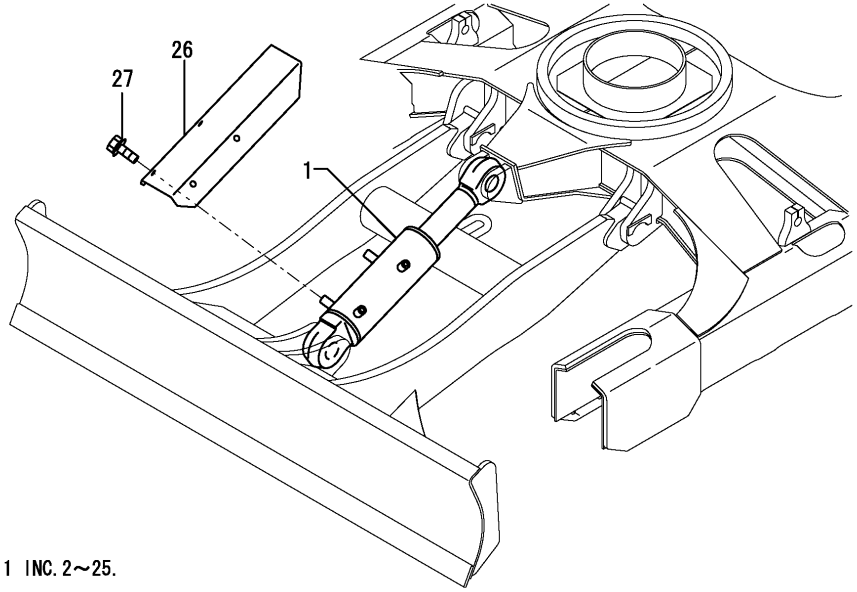

1 INC.2～25.

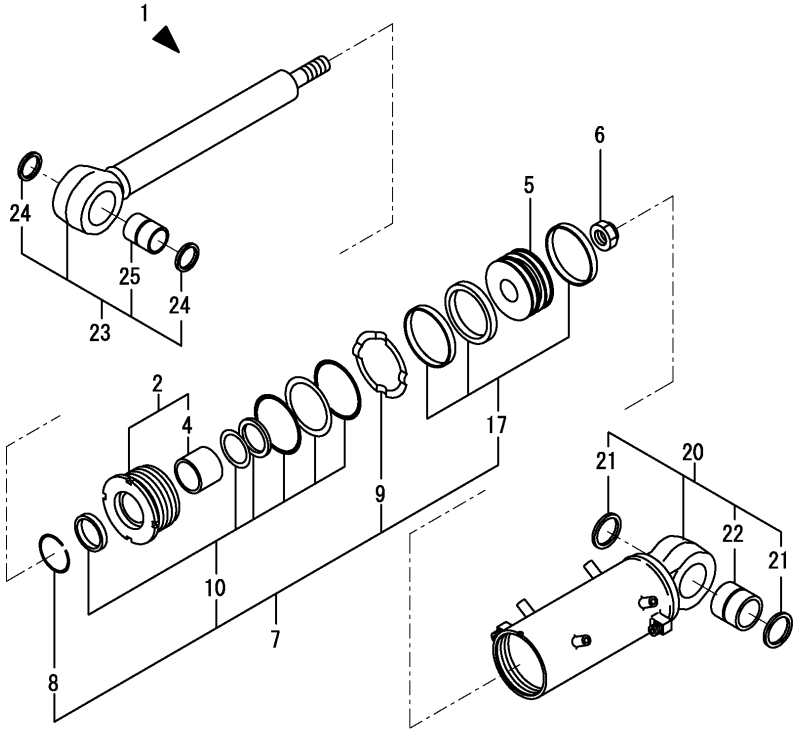

(A)=SV100(US) (D)=
(B)=SV100(AS) (E)=
(C)=SV100(NZ) (F)=

No.	Lev.	Parts No.	Description	Q'ty (A)	(B)	(C)	(D)	(E)	(F)	I	R
1	1	172499-72600	CYLINDER ASSY, BLADE	1	1	1					
1-1	1	172499-72600-1	CYLINDER ASSY, BLADE	1	1	1				S	
	(A=M/#00758)	(B=M/#00758)	(C=M/#00758)								
2	2	172020-11500	HEAD ASSY	1	1	1					
4	3	24550-065400	BUSH, 65X40	1	1	1					
5	2	172020-11520	PISTON	1	1	1					
6	2	172020-11540	NUT	1	1	1					
7	2	172020-11720	SEAL SET, CYLINDER	1	1	1					
8	3	172020-10380	RING, SPRING	1	1	1					
9	3	172020-11530	WASHER, LOCK	1	1	1					
10	3	172020-11730	SEAL SET, HEAD	1	1	1					
17	3	172020-11740	SEAL SET, PISTON	1	1	1					
20	2	172478-72210-1	TUBE ASSY, BLADE	1	1	1					
20-1	2	172478-72210-2	TUBE ASSY, BLADE	1	1	1				S	
	(A=M/#00758)	(B=M/#00758)	(C=M/#00758)								
20-2	2	172478-72610	TUBE ASSY, BLADE	1	1	1				N	
	(A=M/#00778)	(B=M/#00778)	(C=M/#00778)								
21	3	172020-10620	SEAL, DUST	2	2	2					
22	3	172020-11450	BUSH, PIN	1	1	1					
23	2	172499-72650	ROD ASSY,BLADE	1	1	1					
24	3	172020-10620	SEAL, DUST	2	2	2					
25	3	172020-11450	BUSH, PIN	1	1	1					
26	1	172187-72891-1	COVER ASSY, BLADE	1	1	1					
26-1	1	172187-72891-2	COVER ASSY, BLADE	1	1	1				S	
	(A=M/#00758)	(B=M/#00758)	(C=M/#00758)								
26-2	1	172187-72892	COVER ASSY, BLADE	1	1	1				N	
	(A=MZZZZZ)	(B=MZZZZZ)	(C=MZZZZZ)								
27	1	26014-100202	BOLT, M10X 20	4	4	4					

N:Old $\xleftarrow[\text{No}]{\text{Yes}}$ New, Q:Old $\xleftarrow[\text{Yes}]{\text{No}}$ New, R:Old $\xleftarrow[\text{Yes}]{\text{Yes}}$ New, S:Old $\xleftarrow[\text{No}]{\text{No}}$ New, W:Add, Z:Discontinued, F:Interchangeable by set, K:Q'ty Change

Copyright (C) YANMAR CO., LTD. All RightsReserved.

Fig.54. HITCH CYLINDER

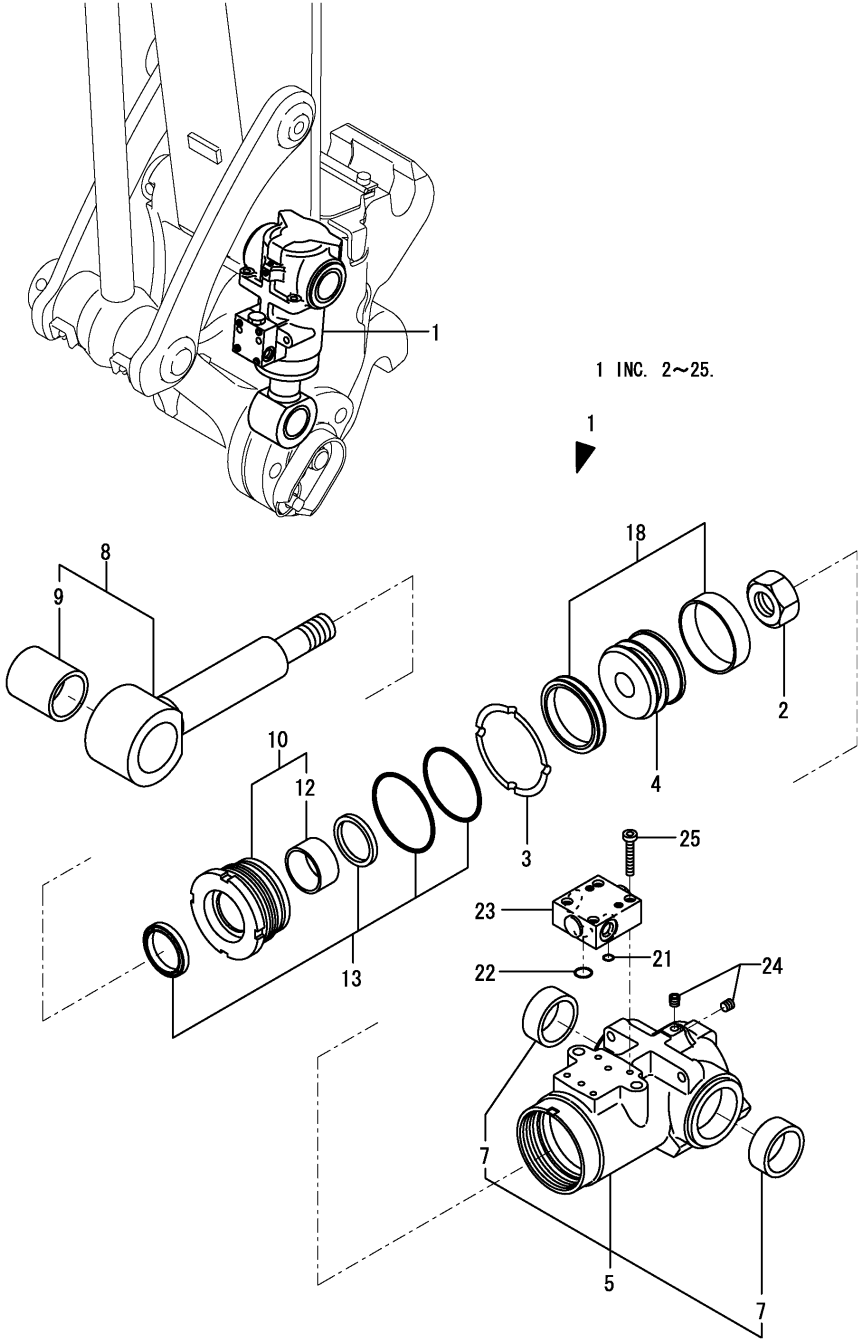

(A)=SV100(US) (D)=
(B)=SV100(AS) (E)=
(C)=SV100(NZ) (F)=

No.	Lev.	Parts No.	Description	Q'ty (A)	(B)	(C)	(D)	(E)	(F)	I	R
1	1	172978-72800	CYLINDER, HITCH	1	1	1					
1-1	1	172978-72800-2	CYLINDER, HITCH	1	1	1				S	
	(A=M/#01231)	(B=M/#01231)	(C=M/#01231)								
2	2	172141-72250	NUT	1	1	1					
3	2	172142-72260	WASHER 80 B	1	1	1					
4	2	172175-72480	PISTON 80	1	1	1					
5	2	172978-72810	TUBE, HITCH	1	1	1					
5-1	2	172978-72810-2	TUBE, HITCH	1	1	1				S	
	(A=M/#01231)	(B=M/#01231)	(C=M/#01231)								
7	3	172978-72890	BUSH 45-55-22	2	2	2					
8	2	172978-72830	ROD,HITCH	1	1	1					
8-1	2	172978-72880	ROD ASSY,HITCH	1	1	1				N	
	(A=M/#00699)	(B=M/#00699)	(C=M/#00699)								
9	3	172151-71630	BUSH 45 60	1	1	1					
10	2	172978-72860	HEAD 80 45	1	1	1					
12	3	24550-045250	BUSH, 45X25	1	1	1					
13	2	172978-72920	SEAL SET, HEAD 80X45	1	1	1					
18	2	172142-72951	SEAL SET, PISTON	1	1	1					
21	2	172958-72950	O-RING	1	1	1					
22	2	172958-72960	O-RING	1	1	1					
23	2	172958-72982-1	CHECK VALVE (87)	1	1	1					
23-1	2	172958-72982-2	CHECK VALVE (2J)	1	1	1				S	
	(A=M/#01231)	(B=M/#01231)	(C=M/#01231)								
24	2	23871-005000	PLUG, R005	2	2	2					
25	2	26450-060352	BOLT, M6X 35	4	4	4					

N:Old $\xleftrightarrow[\text{No}]{\text{Yes}}$ New, Q:Old $\xleftrightarrow[\text{Yes}]{\text{No}}$ New, R:Old $\xleftrightarrow[\text{Yes}]{\text{Yes}}$ New, S:Old $\xleftrightarrow[\text{No}]{\text{No}}$ New, W:Add, Z:Discontinued, F:Interchangeable by set, K:Q'ty Change

Copyright (C) YANMAR CO., LTD. All RightsReserved.

Fig.55. TRAVEL MOTOR

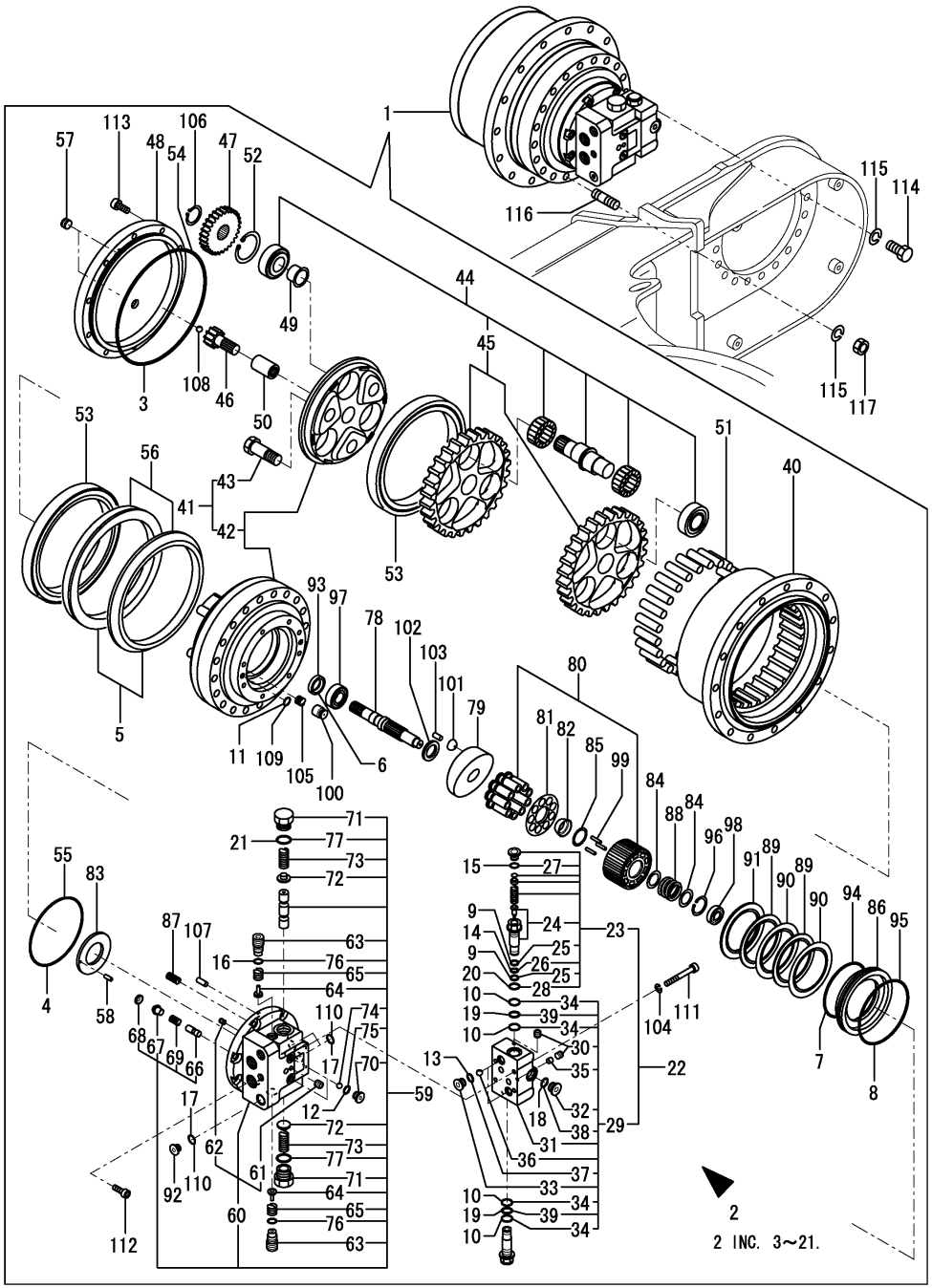

(A)=SV100(US) (D)=
(B)=SV100(AS) (E)=
(C)=SV100(NZ) (F)=

No.	Lev.	Parts No.	Description	Q'ty (A)	(B)	(C)	(D)	(E)	(F)	I	R
1	1	172499-73300	MOTOR ASSY, DRIVE	2	2	2					
2	2	172499-73010	SEAL SET	2	2	2					
3	3	172499-73450	O-RING	2	2	2					
4	3	172499-73460	O-RING	2	2	2					
5	3	172499-73470	SEAL SET, FLOATING	2	2	2					
6	3	172499-73750	SEAL, OIL	2	2	2					
7	3	172499-73760	O-RING	2	2	2					
8	3	172499-73770	O-RING	2	2	2					
9	3	172479-73930	BACK UP RING	8	8	8					
10	3	172499-73940	RING, BACK UP	8	8	8					
11	3	24315-000070	O-RING, 1BP7.0	4	4	4					
12	3	24315-000110	O-RING, 1BP11.0	4	4	4					
13	3	24315-000110	O-RING, 1BP11.0	4	4	4					
14	3	24315-000140	O-RING, 1BP14.0	4	4	4					
15	3	24315-000160	O-RING, 1BP16.0	4	4	4					
16	3	24315-000160	O-RING, 1BP16.0	2	2	2					
17	3	24315-000180	O-RING, 1BP18.0	6	6	6					
18	3	24315-000180	O-RING, 1BP18.0	2	2	2					
19	3	24315-000200	O-RING, 1BP20.0	4	4	4					
20	3	24315-000200	O-RING, 1BP20.0	4	4	4					
21	3	24315-000260	O-RING, 1BP26.0	4	4	4					
22	2	172499-73020	VALVE ASSY,RELIEF	2	2	2					
23	3	172499-73880	VALVE KIT	4	4	4					
24	4	172499-73890	SLEEVE KIT	4	4	4					
25	4	172479-73930	BACK UP RING	8	8	8					
26	4	24315-000140	O-RING, 1BP14.0	4	4	4					
27	4	24315-000160	O-RING, 1BP16.0	4	4	4					
28	4	24315-000200	O-RING, 1BP20.0	4	4	4					
29	3	172499-73900	BODY KIT	2	2	2					
30	4	172479-73760	PLUG	10	10	10					
31	4	172499-73910	BODY.PISTON KIT	2	2	2					
32	4	172499-73920	PLUG	2	2	2					
33	4	172499-73930	PLUG	4	4	4					
34	4	172499-73940	RING, BACK UP	8	8	8					
35	4	172499-73950	ORIFICE	4	4	4					
36	4	24190-120001	BALL, STEEL 3/8	4	4	4					
37	4	24315-000110	O-RING, 1BP11.0	4	4	4					
38	4	24315-000180	O-RING, 1BP18.0	2	2	2					
39	4	24315-000200	O-RING, 1BP20.0	4	4	4					
40	2	172499-73310	HUB	2	2	2					
41	2	172499-73320	SPINDLE KIT	2	2	2					
42	3	172499-73330	SPINDLE ASSY	2	2	2					
43	3	172499-73340	REAMER BOLT	6	6	6					
44	2	172499-73350	GEAR ASSY	2	2	2					
45	3	172499-73360	GEAR KIT	2	2	2					
46	2	172499-73370	GEAR, INPUT	2	2	2					
47	2	172499-73380	GEAR KIT, SPAR	2	2	2					
48	2	172499-73390	COVER	2	2	2					
49	2	172499-73400	PIECE, DISTANCE	6	6	6					
50	2	172499-73410	COUPLING	2	2	2					
51	2	172499-73420	PIN	48	48	48					

N:Old $\frac{\text{Yes}}{\text{No}}$ New, Q:Old $\frac{\text{No}}{\text{Yes}}$ New, R:Old $\frac{\text{Yes}}{\text{Yes}}$ New, S:Old $\frac{\text{No}}{\text{No}}$ New, W:Add, Z:Discontinued, F:Interchangeable by set, K:Q'ty Change

++ CONTINUE ++

Copyright (C) YANMAR CO., LTD. All RightsReserved.

Fig.55. TRAVEL MOTOR

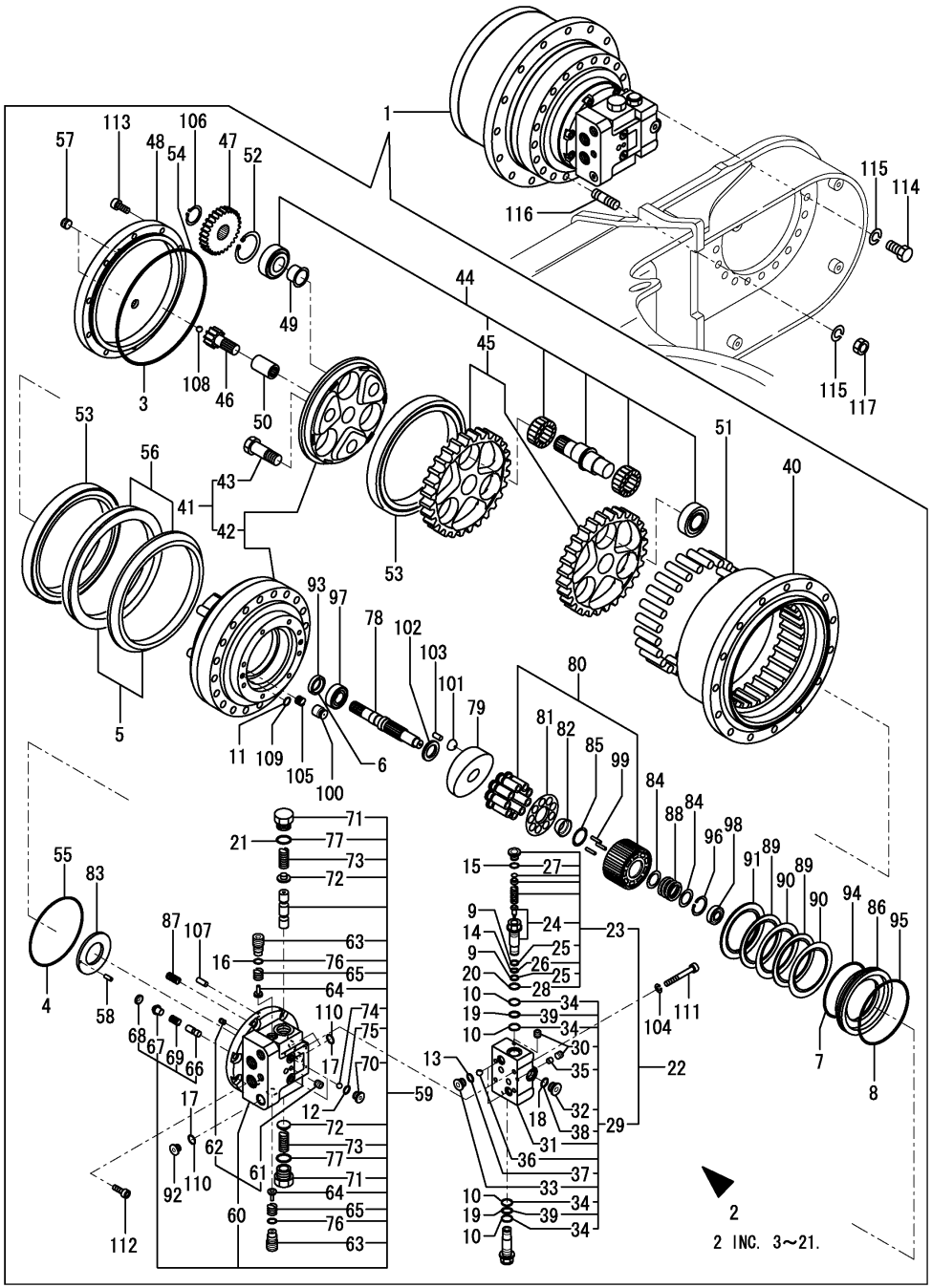

(A)=SV100(US) (D)=
(B)=SV100(AS) (E)=
(C)=SV100(NZ) (F)=

No.	Lev.	Parts No.	Description	Q'ty (A)	(B)	(C)	(D)	(E)	(F)	I	R
52	2	172499-73430	CIRCLIP	6	6	6					
53	2	172499-73440	B.BEARING	4	4	4					
54	2	172499-73450	O-RING	2	2	2					
55	2	172499-73460	O-RING	2	2	2					
56	2	172499-73470	SEAL SET, FLOATING	2	2	2					
57	2	172499-73480	PLUG	4	4	4					
58	2	172499-73490	PIN	2	2	2					
59	2	172499-73500	FLANGE,REAR	2	2	2					
60	3	172499-73510	FLANGE,REAR	2	2	2					
61	4	172479-73750	PLUG	2	2	2					
62	4	172479-73760	PLUG	12	12	12					
63	3	172499-73520	PLUG	4	4	4					
64	3	172499-73530	VALVE	4	4	4					
65	3	172499-73540	SPRING	4	4	4					
66	3	172499-73550	VALVE	2	2	2					
67	3	172499-73560	STOPPER	2	2	2					
68	3	172499-73570	RING	2	2	2					
69	3	172499-73580	SPRING	2	2	2					
70	3	172499-73590	PLUG	4	4	4					
71	3	172479-73790	PLUG	4	4	4					
72	3	172479-73800	SPRING RETAINER	4	4	4					
73	3	172479-73820	SPRING	4	4	4					
74	3	24190-120001	BALL, STEEL 3/8	4	4	4					
75	3	24315-000110	O-RING, 1BP11.0	4	4	4					
76	3	24315-000160	O-RING, 1BP16.0	4	4	4					
77	3	24315-000260	O-RING, 1BP26.0	4	4	4					
78	2	172499-73600	SHAFT	2	2	2					
79	2	172499-73610	SWASH PLATE	2	2	2					
80	2	172499-73620	PISTON ASSEMBLE	2	2	2					
81	2	172499-73630	RETAINER PLATE	2	2	2					
82	2	172499-73640	THRUST BALL	2	2	2					
83	2	172499-73650	PLATE,TIMMING	2	2	2					
84	2	172499-73660	WASHER	4	4	4					
85	2	172499-73670	WASHER	2	2	2					
86	2	172499-73680	PISTON, HYDRAULIC	2	2	2					
87	2	172499-73690	SPRING	16	16	16					
88	2	172499-73700	SPRING	2	2	2					
89	2	172499-73710	PLATE,FRICTION	4	4	4					
90	2	172499-73720	PLATE	4	4	4					
91	2	172499-73730	PLATE	2	2	2					
92	2	172499-73740	PLUG	2	2	2					
93	2	172499-73750	SEAL, OIL	2	2	2					
94	2	172499-73760	O-RING	2	2	2					
95	2	172499-73770	O-RING	2	2	2					
96	2	172499-73780	RING	2	2	2					
97	2	172499-73790	BEARING	2	2	2					
98	2	172499-73800	BEARING	2	2	2					
99	2	172499-73810	ROLLER	6	6	6					
100	2	172499-73820	PISTON ASSEMBLE	2	2	2					
101	2	172499-73830	PIVOT	2	2	2					
102	2	172499-73840	COLLAR	2	2	2					

N:Old $\frac{\text{Yes}}{\text{No}}$ New, Q:Old $\frac{\text{No}}{\text{Yes}}$ New, R:Old $\frac{\text{Yes}}{\text{Yes}}$ New, S:Old $\frac{\text{No}}{\text{No}}$ New, W:Add, Z:Discontinued, F:Interchangeable by set, K:Q'ty Change

++ CONTINUE ++

Copyright (C) YANMAR CO., LTD. All RightsReserved.

Fig.55. TRAVEL MOTOR

(A)=SV100(US) (D)=
(B)=SV100(AS) (E)=
(C)=SV100(NZ) (F)=

No.	Lev.	Parts No.	Description	Q'ty (A)	(B)	(C)	(D)	(E)	(F)	I	R
103	2	172499-73850	PIN	4	4	4					
104	2	172499-73860	WASHER	8	8	8					
105	2	172499-73870	SPRING	2	2	2					
106	2	22242-000350	RING, 35	6	6	6					
107	2	22312-100250	PIN, PARALLEL M10X25	4	4	4					
108	2	24190-120001	BALL, STEEL 3/8	2	2	2					
109	2	24315-000070	O-RING, 1BP7.0	4	4	4					
110	2	24315-000180	O-RING, 1BP18.0	6	6	6					
111	2	26450-080652	BOLT, M8X 65	8	8	8					
112	2	26450-100302	BOLT, M10X 30	16	16	16					
113	2	26450-120302	BOLT, M12X 30	20	20	20					
114	1	172460-73320	BOLT	36	36	36					
115	1	22217-160000	WASHER, SPRING 16	40	40	40					
116	1	26216-160452	STUD, M16X 45	4	4	4					
117	1	26716-160002	NUT, M16	4	4	4					

N:Old $\xleftarrow[\text{No}]{\text{Yes}}$ New, Q:Old $\xleftarrow[\text{Yes}]{\text{No}}$ New, R:Old $\xleftarrow[\text{Yes}]{\text{Yes}}$ New, S:Old $\xleftarrow[\text{No}]{\text{No}}$ New, W:Add, Z:Discontinued, F:Interchangeable by set, K:Q'ty Change

Copyright (C) YANMAR CO., LTD. All RightsReserved.

Fig.56. TURNING MOTOR(PREVIOUS)

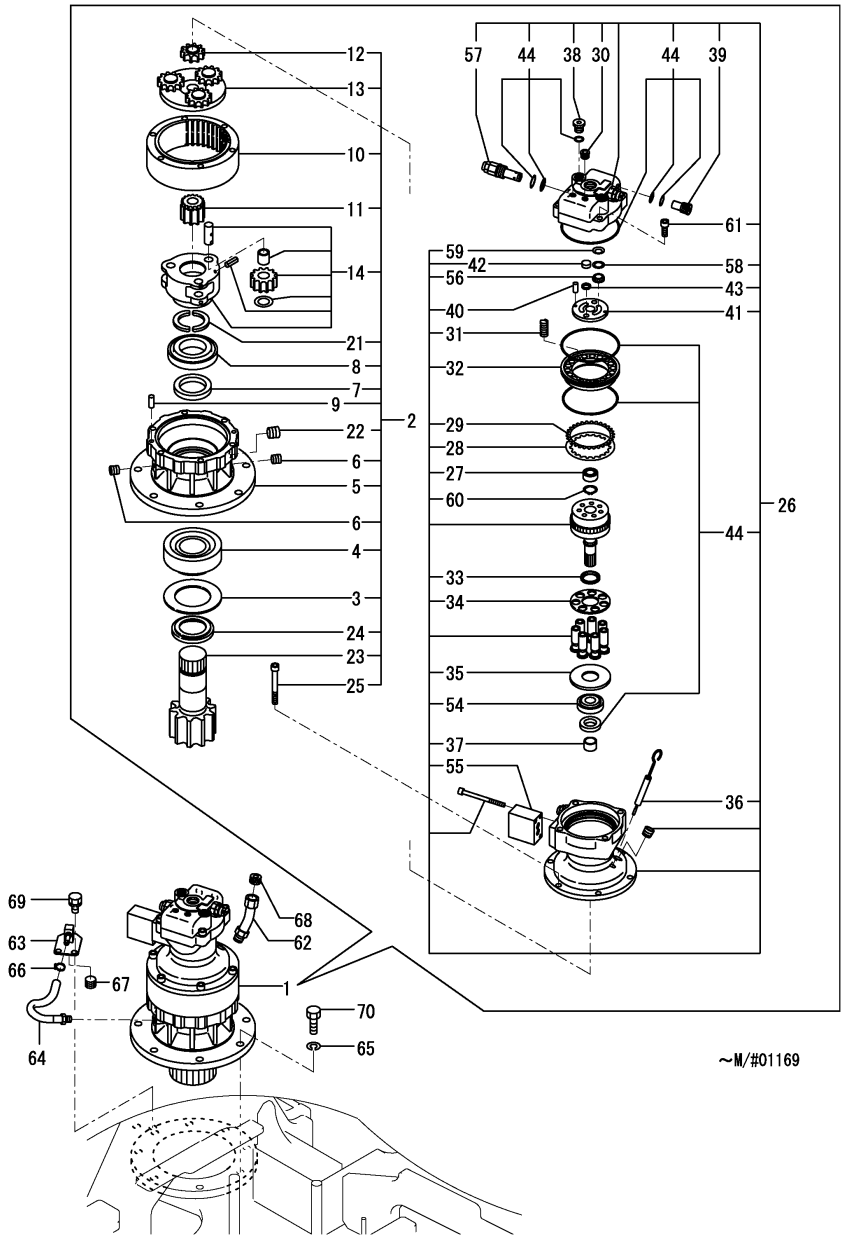

(A)=SV100(US) (D)=
(B)=SV100(AS) (E)=
(C)=SV100(NZ) (F)=

No.	Lev.	Parts No.	Description	Q'ty (A)	(B)	(C)	(D)	(E)	(F)	I	R
1	1	172187-73311	MOTOR ASSY, TURNING	1	1	1					
2	2	172187-73370	GEAR ASSY, REDUCTION	1	1	1					
3	3	172162-71480	PLATE	1	1	1					
4	3	172162-71490	BEARING,TAPER ROLLER	1	1	1					
5	3	172162-71500	CASE, GEAR	1	1	1					
6	3	172162-71510	PLUG PT1/8	2	2	2					
7	3	172162-71520	SEAL, OIL	1	1	1					
8	3	172162-71530	BEARING,TAPER ROLLER	1	1	1					
9	3	172162-71540	PIN	2	2	2					
10	3	172162-71550	GEAR, RING	1	1	1					
11	3	172162-71560	GEAR, SPUR	1	1	1					
12	3	172162-71570	GEAR, SUN	1	1	1					
13	3	172162-71580	HOLDER 1 COMPL.	1	1	1					
14	3	172162-71590	HOLDER 2 COMPL.	1	1	1					
21	3	172162-71660	COLLAR	2	2	2					
22	3	172162-71670	PLUG PT3/8	1	1	1					
23	3	172187-73380	SHAFT, PINION	1	1	1					
24	3	172187-73390	COLLAR	1	1	1					
25	3	26450-120952	BOLT, M12X 95	6	6	6					
26	2	172187-73411	MOTOR ASSY, HYD.OIL	1	1	1					
27	3	172162-71711	BEARING, NEEDLE	1	1	1					
28	3	172162-71720	PLATE,FRICTION	1	1	1					
29	3	172162-71730	PLATE	1	1	1					
30	3	172162-71780	PLUG PT1/4	2	2	2					
31	3	172162-71820	SPRING	18	18	18					
32	3	172162-71830	PISTON	1	1	1					
33	3	172162-71850	SPRING	1	1	1					
34	3	172162-71860	PLATE,RETURN	1	1	1					
35	3	172162-71870	PLATE,CAM	1	1	1					
36	3	172162-71880	GAUGE ASSY, LEVEL	1	1	1					
37	3	172162-71900	COLLAR	1	1	1					
38	3	172162-71910	CAP	1	1	1					
39	3	172162-71920	VALVE COMP.,BYPASS	2	2	2					
40	3	172162-71960	PIN,STRAIGHT	2	2	2					
41	3	172176-73351	BALANCE PLATE	1	1	1					
42	3	172176-73360	PISTON	2	2	2					
43	3	172176-73370	TEFLON RING	2	2	2					
44	3	172187-73420	SEAL SET, MOTOR	1	1	1					
54	3	172165-73430	BEARING	1	1	1					
55	3	172187-73430	TIMER, HYDRAULIC	1	1	1					
56	3	172165-73441	BUSHING	4	4	4					
57	3	172187-73440	RELIEF, 210-60	2	2	2					
58	3	172165-73451	TEFLON RING	4	4	4					
59	3	172165-73461	WAVE	4	4	4					
60	3	172165-73480	SNAP RING	1	1	1					
61	3	26450-120302	BOLT, M12X 30	4	4	4					
62	1	172187-73340	PIPE, OIL FEED	1	1	1					
63	1	172455-76130	DRAIN ASSY	1	1	1					
64	1	172455-78120	HOSE	1	1	1					
65	1	22217-160000	WASHER, SPRING 16	8	8	8					
66	1	23001-016000	CLAMP, HOSE 16	1	1	1					

Remarks
*RERATED TO NEW TURNING MOTOR PARTS
ARE SHOWN IN FIG.98.

N:Old $\xleftarrow[\text{No}]{\text{Yes}}$ New, Q:Old $\xleftarrow[\text{Yes}]{\text{No}}$ New, R:Old $\xleftarrow[\text{Yes}]{\text{Yes}}$ New, S:Old $\xleftarrow[\text{No}]{\text{No}}$ New, W:Add, Z:Discontinued, F:Interchangeable by set, K:Q'ty Change

++ CONTINUE ++

Copyright (C) YANMAR CO., LTD. All RightsReserved.

Fig.56. TURNING MOTOR(PREVIOUS)

(A)=SV100(US) (D)=
(B)=SV100(AS) (E)=
(C)=SV100(NZ) (F)=

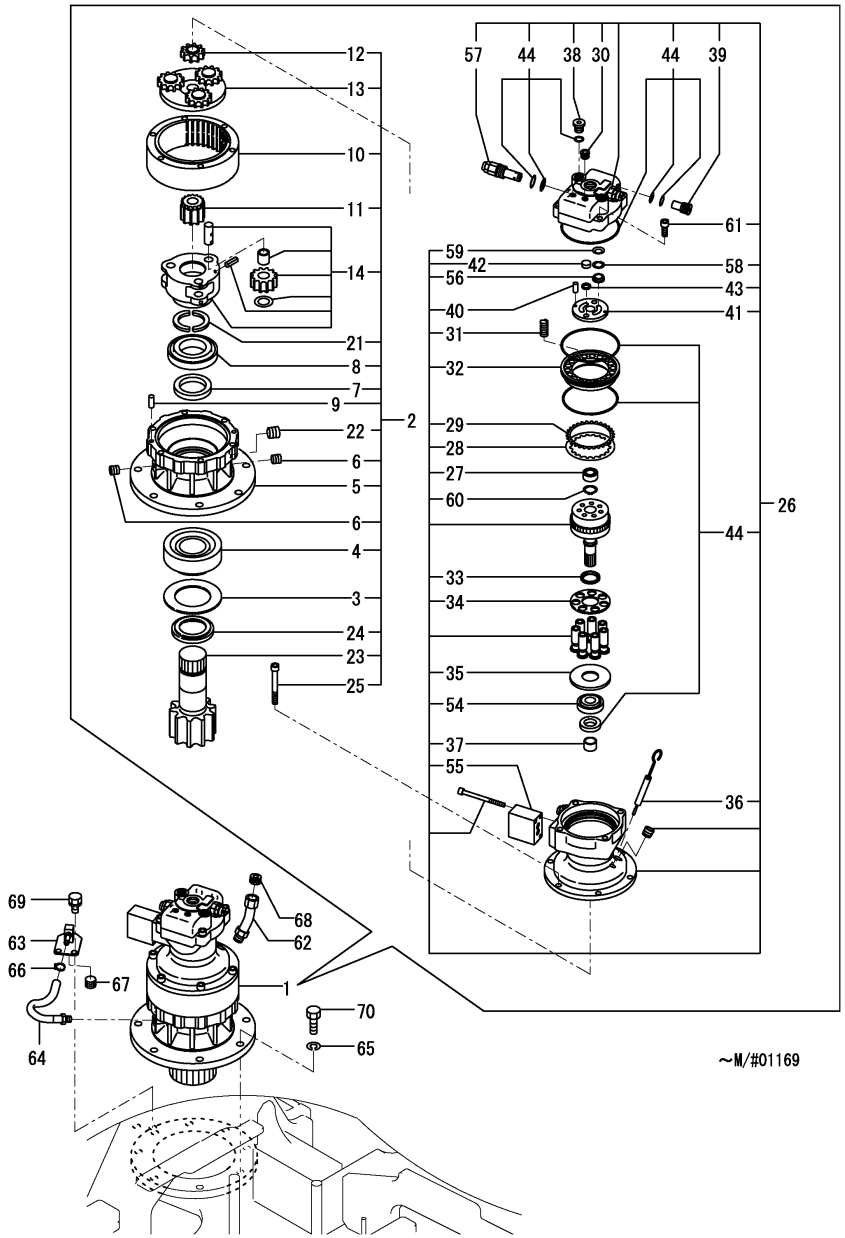

No.	Lev.	Parts No.	Description	Q'ty (A)	(B)	(C)	(D)	(E)	(F)	I	R
67	1	23871-030000	PLUG, R03	1	1	1					
68	1	23871-040000	PLUG, R04	1	1	1					
69	1	26013-100162	BOLT, M10X 16	2	2	2					
70	1	26116-160502	BOLT, M16X 50 PLATED	8	8	8					

Remarks
*RERATED TO NEW TURNING MOTOR PARTS
ARE SHOWN IN FIG.98.

N:Old ←Yes/No→ New, Q:Old ←No/Yes→ New, R:Old ←Yes/Yes→ New, S:Old ←No/No→ New, W:Add, Z:Discontinued, F:Interchangeable by set, K:Q'ty Change

Copyright (C) YANMAR CO., LTD. All RightsReserved.

Fig.98. (56A)TURNING MOTOR(NEW)

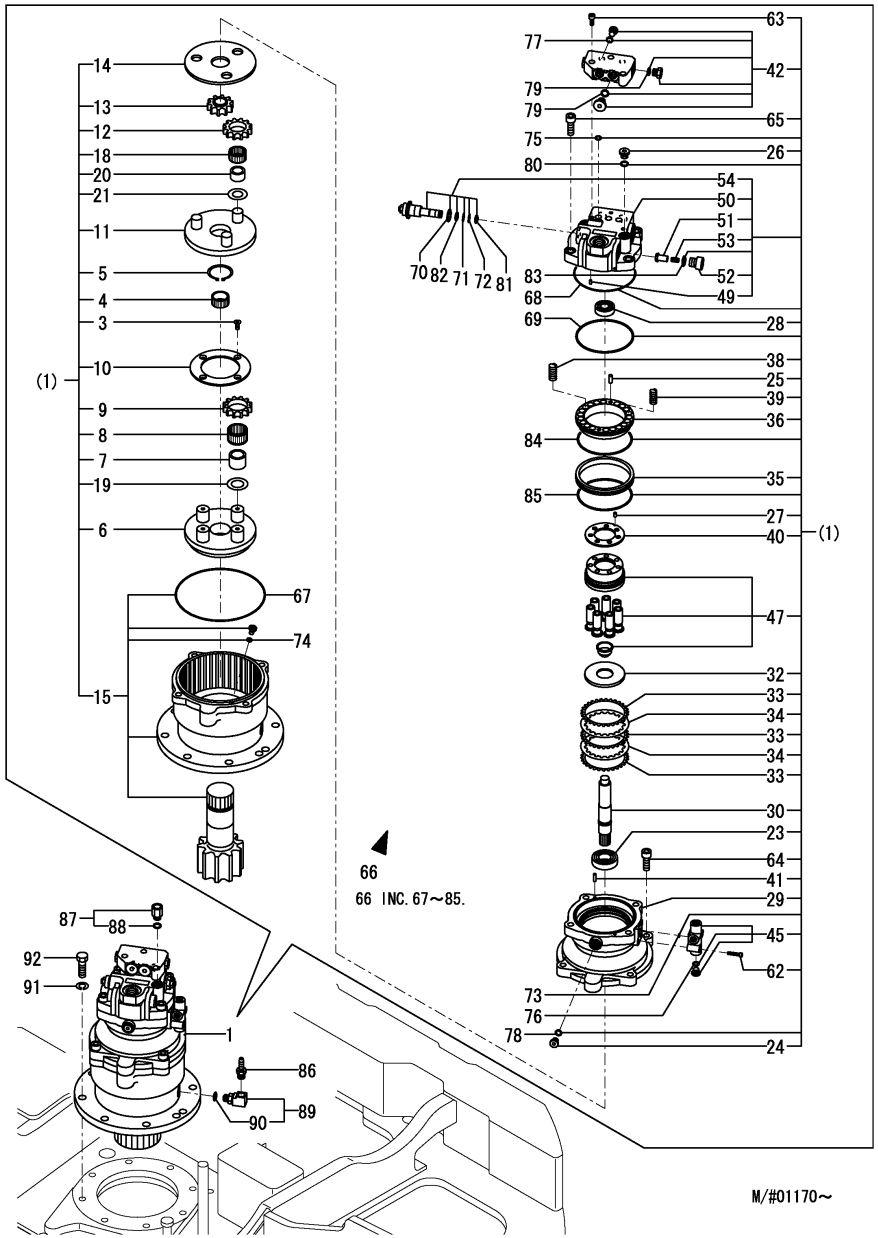

Remarks
*RERATED TO PREVIOUS TURNING MOTOR
PARTS ARE SHOWN IN FIG.56.

(A)=SV100(US) (D)=
(B)=SV100(AS) (E)=
(C)=SV100(NZ) (F)=

No.	Lev.	Parts No.	Description	Q'ty (A)	(B)	(C)	(D)	(E)	(F)	I	R
1	1	172499-73200	MOTOR ASSY, SWING	1	1	1					
3	3	172162-70290	SCREW	4	4	4					
4	3	172162-70310	GEAR, SUN	1	1	1					
5	3	172162-70320	RING,SNAP	1	1	1					
6	3	172499-70720	HOLDER	1	1	1					
7	3	172499-70730	RACE,INNER	4	4	4					
8	3	172499-70740	BEARING,NEEDLE	4	4	4					
9	3	172499-70750	GEAR, PLANETARY	4	4	4					
10	3	172499-70760	PLATE,THRUST	1	1	1					
11	3	172499-70770	HOLDER	1	1	1					
12	3	172499-70780	GEAR, PLANETARY	3	3	3					
13	3	172499-70790	GEAR, DRIVE	1	1	1					
14	3	172499-71040	PLATE THRUST KIT	1	1	1					
15	3	172499-71050	HOUSING ASSY	1	1	1					
18	3	172450-73360	NEEDLE BEARING	3	3	3					
19	3	172423-73370	WASHER	4	4	4					
20	3	172450-73370	INNER RACE	3	3	3					
21	3	172450-73380	WASHER,THRUST	3	3	3					
23	3	172122-70260	BEARING	1	1	1					
24	3	172148-70301	PLUG	1	1	1					
25	3	172122-70410	PIN	2	2	2					
26	3	172147-70500	PLUG	1	1	1					
27	3	172122-70530	PIN	1	1	1					
28	3	172162-70590	BEARING,BALL	1	1	1					
29	3	172499-70800	CASE	1	1	1					
30	3	172499-70810	SHAFT	1	1	1					
32	3	172499-70820	PLATE,THRUST	1	1	1					
33	3	172499-70830	DISK	3	3	3					
34	3	172499-70840	PLATE,FRICTION	2	2	2					
35	3	172499-70850	COLLAR	1	1	1					
36	3	172499-70860	PISTON,BRAKE	1	1	1					
38	3	172499-70880	SPRING	12	12	12					
39	3	172499-70890	SPRING	8	8	8					
40	3	172499-70970	PLATE,VALVE	1	1	1					
41	3	172499-70980	PIN	2	2	2					
42	3	172499-70990	VALVE ASSY	1	1	1					
45	3	172499-71010	VALVE ASSY	1	1	1					
45-1	3	172499-71011	VALVE ASSY	1	1	1				N	
	(A=M/#01257)	(B=M/#01257)	(C=M/#01257)								
47	3	172499-71030	CYLINDER BLOCK ASSY	1	1	1					
49	4	172124-70380	ORIFICE	1	1	1					
50	4	172499-70900	COVER	1	1	1					
51	4	172499-70910	POPPET	2	2	2					
52	4	172499-70920	PLUG	2	2	2					
53	4	172499-70930	SPRING	2	2	2					
54	4	172499-70940	VALVE ASSY,RELIEF	2	2	2					
62	3	26450-060302	BOLT, M6X 30	2	2	2					
63	3	26450-080202	BOLT, M8X 20	3	3	3					
64	3	26450-140402	BOLT, M14X 40	4	4	4					
65	2	26450-140402	BOLT, M14X 40	4	4	4					
66	1	172499-71020	REPAIR KIT	1	1	1					

N:Old $\overset{\text{Yes}}{\underset{\text{No}}{\leftrightarrow}}$ New, Q:Old $\overset{\text{No}}{\underset{\text{Yes}}{\leftrightarrow}}$ New, R:Old $\overset{\text{Yes}}{\underset{\text{Yes}}{\leftrightarrow}}$ New, S:Old $\overset{\text{No}}{\underset{\text{No}}{\leftrightarrow}}$ New, W:Add, Z:Discontinued, F:Interchangeable by set, K:Q'ty Change

++ CONTINUE ++

Copyright (C) YANMAR CO., LTD. All RightsReserved.

Fig.98. (56A)TURNING MOTOR(NEW)

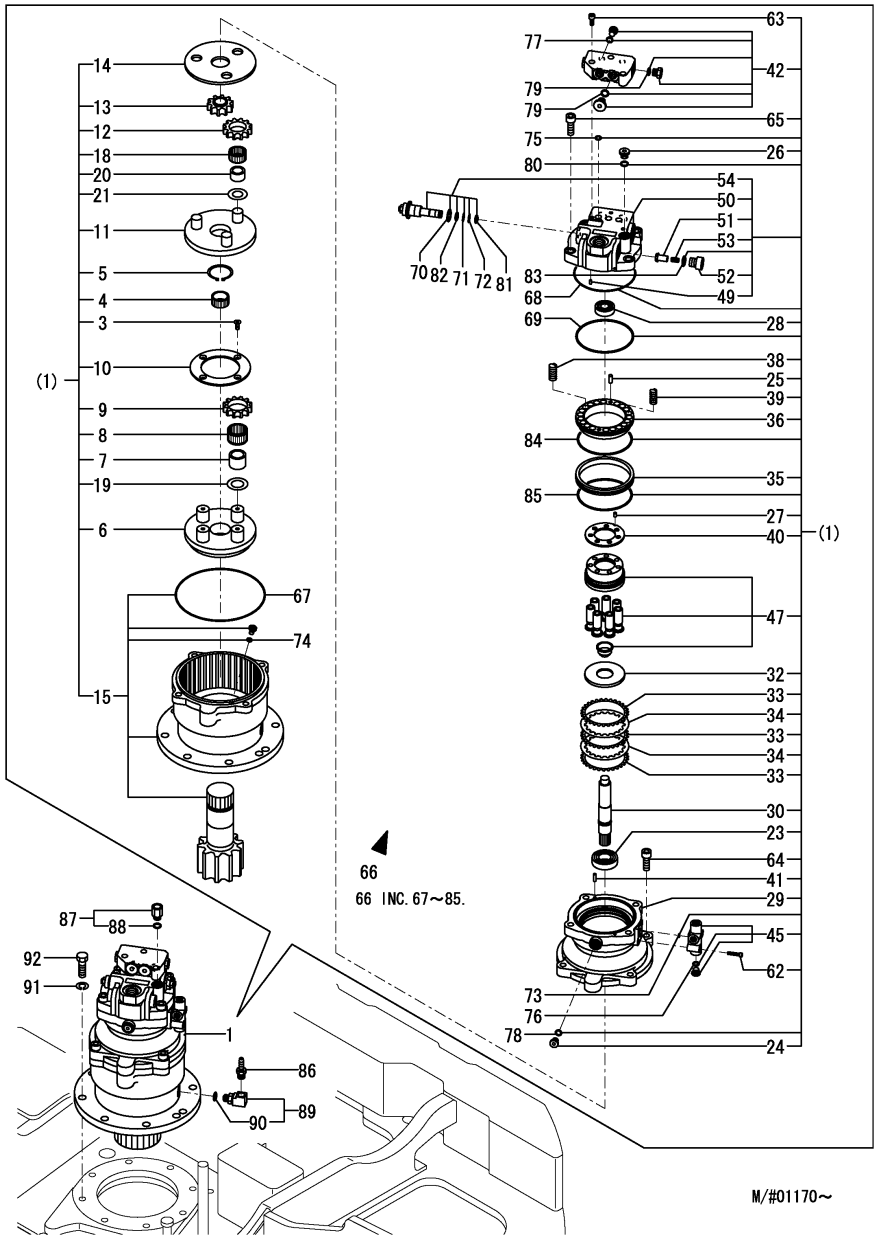

(A)=SV100(US) (D)=
(B)=SV100(AS) (E)=
(C)=SV100(NZ) (F)=

No.	Lev.	Parts No.	Description	Q'ty (A)	(B)	(C)	(D)	(E)	(F)	I	R
67	2	172162-70150	O-RING	1	1	1					
68	2	172162-70820	O-RING	1	1	1					
69	2	172499-70870	O-RING	1	1	1					
70	2	172499-70950	O-RING	2	2	2					
71	2	172499-70960	RING,BACK-UP	2	2	2					
72	2	172312-74780	RING, BUCK UP	2	2	2					
73	2	24315-000070	O-RING, 1BP7.0	2	2	2					
74	2	24315-000080	O-RING, 1BP8.0	1	1	1					
75	2	24315-000100	O-RING, 1BP10.0	3	3	3					
76	2	24315-000110	O-RING, 1BP11.0	1	1	1					
77	2	24315-000110	O-RING, 1BP11.0	2	2	2					
78	2	24315-000110	O-RING, 1BP11.0	1	1	1					
79	2	24315-000140	O-RING, 1BP14.0	4	4	4					
80	2	24315-000140	O-RING, 1BP14.0	1	1	1					
81	2	24315-000150	O-RING, 1BP15.0	2	2	2					
82	2	24315-000160	O-RING, 1BP16.0	2	2	2					
83	2	24315-000210	O-RING, 1BP21.0	2	2	2					
84	2	24325-001300	O-RING, 1BG130.0	1	1	1					
85	2	24325-001450	O-RING, 1BG145.0	1	1	1					
86	1	172137-76110	NIPPLE	1	1	1					
87	1	172A52-76130	ADAPTER	1	1	1					
88	2	24315-000140	O-RING, 1BP14.0	1	1	1					
89	1	172499-76300	ELBOW ASSY	1	1	1					
90	2	24315-000140	O-RING, 1BP14.0	1	1	1					
91	1	22217-160000	WASHER, SPRING 16	8	8	8					
92	1	26116-160502	BOLT, M16X 50 PLATED	8	8	8					

Remarks
*RERATED TO PREVIOUS TURNING MOTOR
PARTS ARE SHOWN IN FIG.56.

N:Old $\xleftrightarrow[\text{No}]{\text{Yes}}$ New, Q:Old $\xleftrightarrow[\text{Yes}]{\text{No}}$ New, R:Old $\xleftrightarrow[\text{Yes}]{\text{Yes}}$ New, S:Old $\xleftrightarrow[\text{No}]{\text{No}}$ New, W:Add, Z:Discontinued, F:Interchangeable by set, K:Q'ty Change

Copyright (C) YANMAR CO., LTD. All RightsReserved.

Fig.57. SWIVEL JOINT

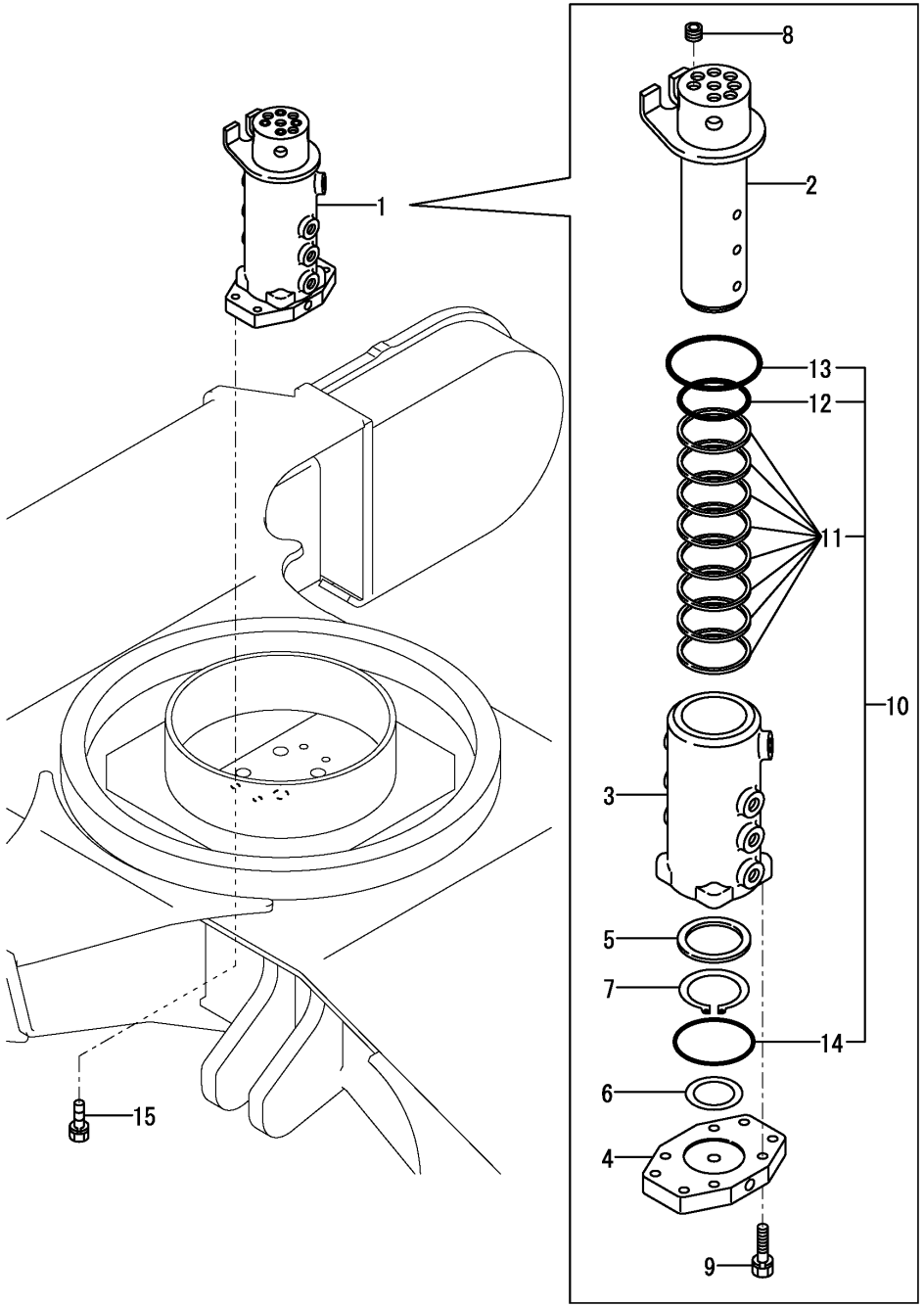

(A)=SV100(US) (D)=
(B)=SV100(AS) (E)=
(C)=SV100(NZ) (F)=

No.	Lev.	Parts No.	Description	Q'ty (A)	(B)	(C)	(D)	(E)	(F)	I	R
1	1	172187-73801	JOINT ASSY, SWIVEL	1	1	1					
2	2	172147-73810	SHAFT, SWIVEL	1	1	1					
3	2	172147-73830	HUB, SWIVEL	1	1	1					
4	2	172147-73850	PLATE	1	1	1					
5	2	172122-73860	SPACER, SWIVEL	1	1	1					
6	2	172122-73870	THRUST WASHER	1	1	1					
7	2	22242-000700	RING, 70	1	1	1					
8	2	23871-030000	PLUG, R03	4	4	4					
9	2	26013-100402	BOLT, M10X 40	4	4	4					
10	2	172423-73810	SEAL ASSY	1	1	1					
10-1	2	172147-73880	SEAL ASSY	1	1	1				N	
	(A=M/#01726)	(B=M/#01726)	(C=M/#01726)								
11	3	172423-73820	SEAL, SWIVEL	8	8	8					
11-1	3	172122-73890	SEAL, SWIVEL	8	8	8				N	
	(A=M/#01726)	(B=M/#01726)	(C=M/#01726)								
12	3	24311-000800	O-RING, 1AP80.0	1	1	1					
13	3	24311-001000	O-RING, 1AP100.0	1	1	1					
14	3	24321-000950	O-RING, 1AG95.0	1	1	1					
15	1	26013-120402	BOLT, M12X 40	4	4	4					

N:Old $\frac{\text{Yes}}{\text{No}}$ New, Q:Old $\frac{\text{No}}{\text{Yes}}$ New, R:Old $\frac{\text{Yes}}{\text{Yes}}$ New, S:Old $\frac{\text{No}}{\text{No}}$ New, W:Add, Z:Discontinued, F:Interchangeable by set, K:Q'ty Change

Copyright (C) YANMAR CO., LTD. All RightsReserved.

Fig.58. CONTROL VALVE(1/8)

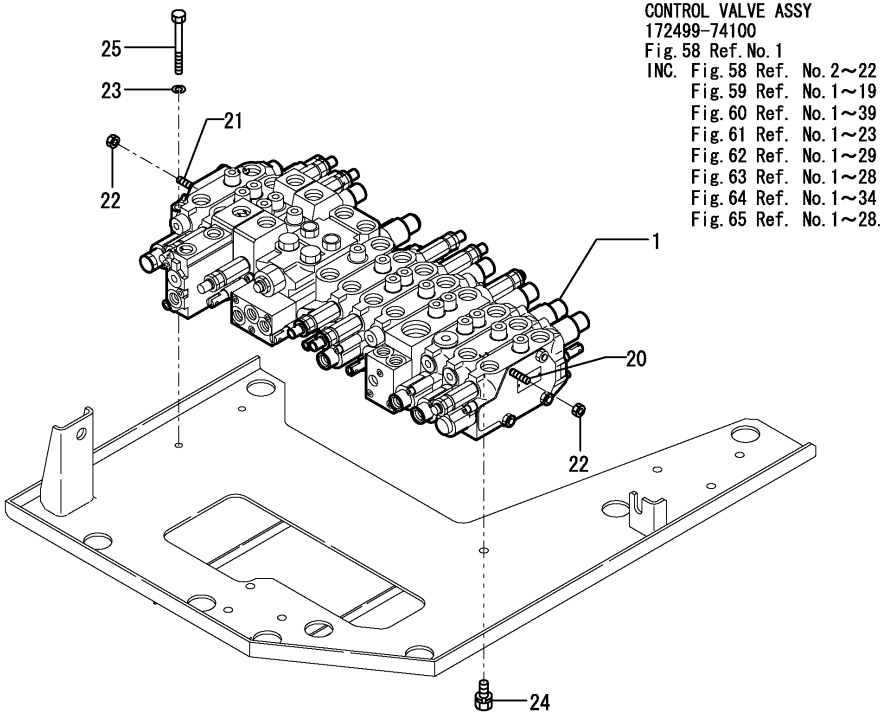

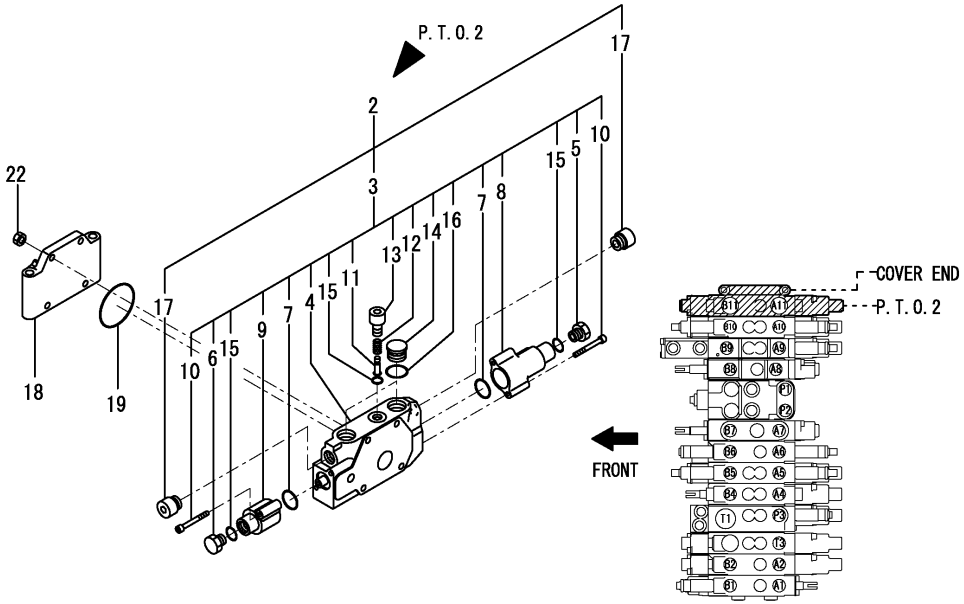

(A)=SV100(US) (D)=
(B)=SV100(AS) (E)=
(C)=SV100(NZ) (F)=

No.	Lev.	Parts No.	Description	Q'ty (A)	(B)	(C)	(D)	(E)	(F)	I	R
1	1	172499-74100	VALVE ASSY, CONTROL	1	1	1					
1-1	1	172499-74101	VALVE ASSY, CONTROL	1	1	1				S	
	(A=M/#01188)	(B=M/#01188)	(C=M/#01188)								
2	2	172499-74090	SECTION ASSY, PTO	1	1	1					
3	3	172499-74230	SECTION, PTO	1	1	1					
4	4	172499-70210	SPOOL ASSY, PTO	1	1	1					
5	4	172499-70220	PLUG,PF1/4	1	1	1					
6	4	172499-70230	PLUG,PF1/4	1	1	1					
7	4	172499-74640	O-RING, AS 1A 119	2	2	2					
8	4	172499-74650	COVER, PILOT	1	1	1					
9	4	172499-74660	COVER, PILOT	1	1	1					
10	4	172499-74670	SWP HEX.BOLT 6X45	4	4	4					
11	4	172499-74680	VALVE, REVERSE	1	1	1					
11-1	4	172490-74310	VALVE, REVERSE	1	1	1				R	
	(A=M/#00515)	(B=M/#00515)	(C=M/#00515)								
12	4	172499-74690	SPRING, VALVE	1	1	1					
12-1	4	172490-74320	SPRING, VALVE	1	1	1				R	
	(A=M/#00515)	(B=M/#00515)	(C=M/#00515)								
13	4	172499-74700	STAY, VALVE	1	1	1					
14	4	172499-74740	PLUG,PF1/2	2	2	2					
15	4	24315-000110	O-RING, 1BP11.0	3	3	3					
16	4	24315-000180	O-RING, 1BP18.0	2	2	2					
17	3	172499-74350	PLUG ASSY	2	2	2					
18	2	172499-74240	CONER, END	1	1	1					
19	2	172499-74250	O-RING, 1B WG6	1	1	1					
20	2	172499-74260	ROD, TIE	4	4	4					
21	2	172499-74270	ROD, TIE	4	4	4					
22	2	172499-74280	NUT, M8	8	8	8					
23	1	22217-080000	WASHER, SPRING 8	2	2	2					
24	1	26013-100202	BOLT, M10X 20	1	1	1					
25	1	26116-080802	BOLT, M8X 80 PLATED	2	2	2					

N:Old $\xleftarrow[\text{No}]{\text{Yes}}$ New, Q:Old $\xleftarrow[\text{Yes}]{\text{No}}$ New, R:Old $\xleftarrow[\text{Yes}]{\text{Yes}}$ New, S:Old $\xleftarrow[\text{No}]{\text{No}}$ New, W:Add, Z:Discontinued, F:Interchangeable by set, K:Q'ty Change

Copyright (C) YANMAR CO., LTD. All RightsReserved.

Fig.59. CONTROL VALVE(2/8)

CONTROL VALVE ASSY
172499-74100
Fig.58 Ref.No.1
INC. Fig.58 Ref. No.2～22
Fig.59 Ref. No.1～19
Fig.60 Ref. No.1～39
Fig.61 Ref. No.1～23
Fig.62 Ref. No.1～29
Fig.63 Ref. No.1～28
Fig.64 Ref. No.1～34
Fig.65 Ref. No.1～28.

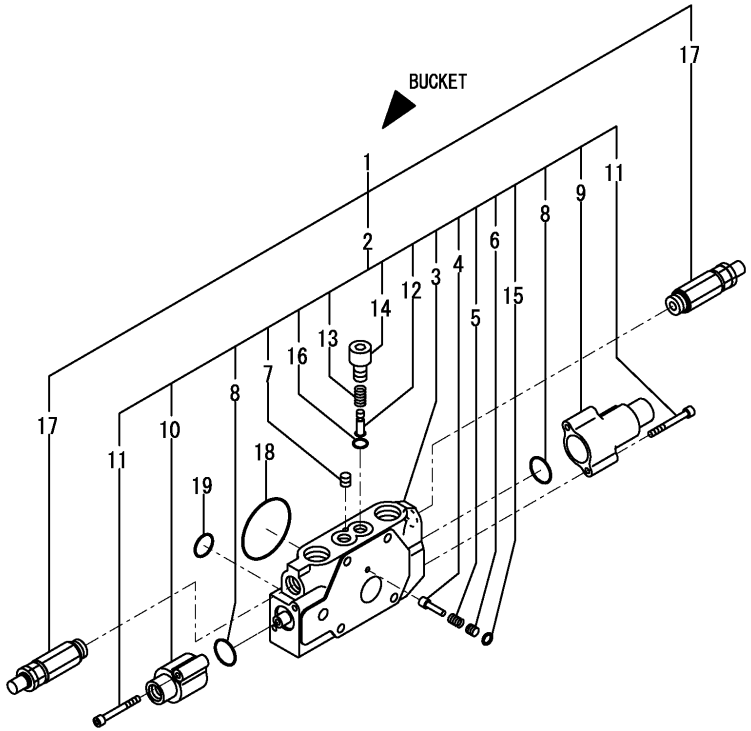

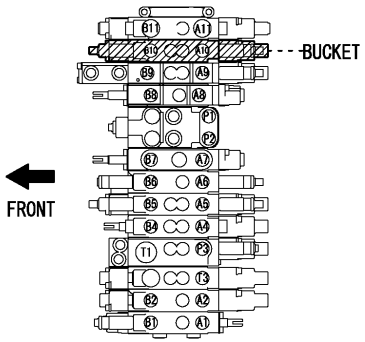

(A)=SV100(US) (D)=
(B)=SV100(AS) (E)=
(C)=SV100(NZ) (F)=

No.	Lev.	Parts No.	Description	Q'ty (A)	(B)	(C)	(D)	(E)	(F)	I	R
1	2	172499-74080	SECTION ASSY, BUCKET	1	1	1					
2	3	172499-74220	SECTION, BUCKET	1	1	1					
3	4	172499-70170	SPOOL ASSY, BUCKET	1	1	1					
4	4	172499-70180	VALVE ASSY, REVERSE	1	1	1					
5	4	172499-70190	SPRING, VALVE	1	1	1					
6	4	172499-70200	STAY, VALVE	1	1	1					
7	4	172458-74460	PLUG GPM1/32	1	1	1					
8	4	172499-74640	O-RING, AS 1A 119	2	2	2					
9	4	172499-74650	COVER, PILOT	1	1	1					
10	4	172499-74660	COVER, PILOT	1	1	1					
11	4	172499-74670	SWP HEX.BOLT 6X45	4	4	4					
12	4	172499-74680	VALVE, REVERSE	2	2	2					
12-1	4	172490-74310	VALVE, REVERSE	2	2	2					R
	(A=M/#00515)	(B=M/#00515)	(C=M/#00515)								
13	4	172499-74690	SPRING, VALVE	2	2	2					
13-1	4	172490-74320	SPRING, VALVE	2	2	2					R
	(A=M/#00515)	(B=M/#00515)	(C=M/#00515)								
14	4	172499-74700	STAY, VALVE	2	2	2					
15	4	24315-000040	O-RING, 1BP4.0	1	1	1					
16	4	24315-000110	O-RING, 1BP11.0	2	2	2					
17	3	172499-74330	VALVE,RELIEF 310/40	2	2	2					
18	2	172499-74250	O-RING, 1B WG6	1	1	1					
19	2	24315-000200	O-RING, 1BP20.0	1	1	1					

N:Old ←Yes/No→ New, Q:Old ←No/Yes→ New, R:Old ←Yes/Yes→ New, S:Old ←No/No→ New, W:Add, Z:Discontinued, F:Interchangeable by set, K:Q'ty Change

Copyright (C) YANMAR CO., LTD. All RightsReserved.

Fig.60. CONTROL VALVE(3/8)

CONTROL VALVE ASSY
172499-74100
Fig.58 Ref.No.1
INC. Fig.58 Ref. No.2～22
Fig.59 Ref. No.1～19
Fig.60 Ref. No.1～39
Fig.61 Ref. No.1～23
Fig.62 Ref. No.1～29
Fig.63 Ref. No.1～28
Fig.64 Ref. No.1～34
Fig.65 Ref. No.1～28.

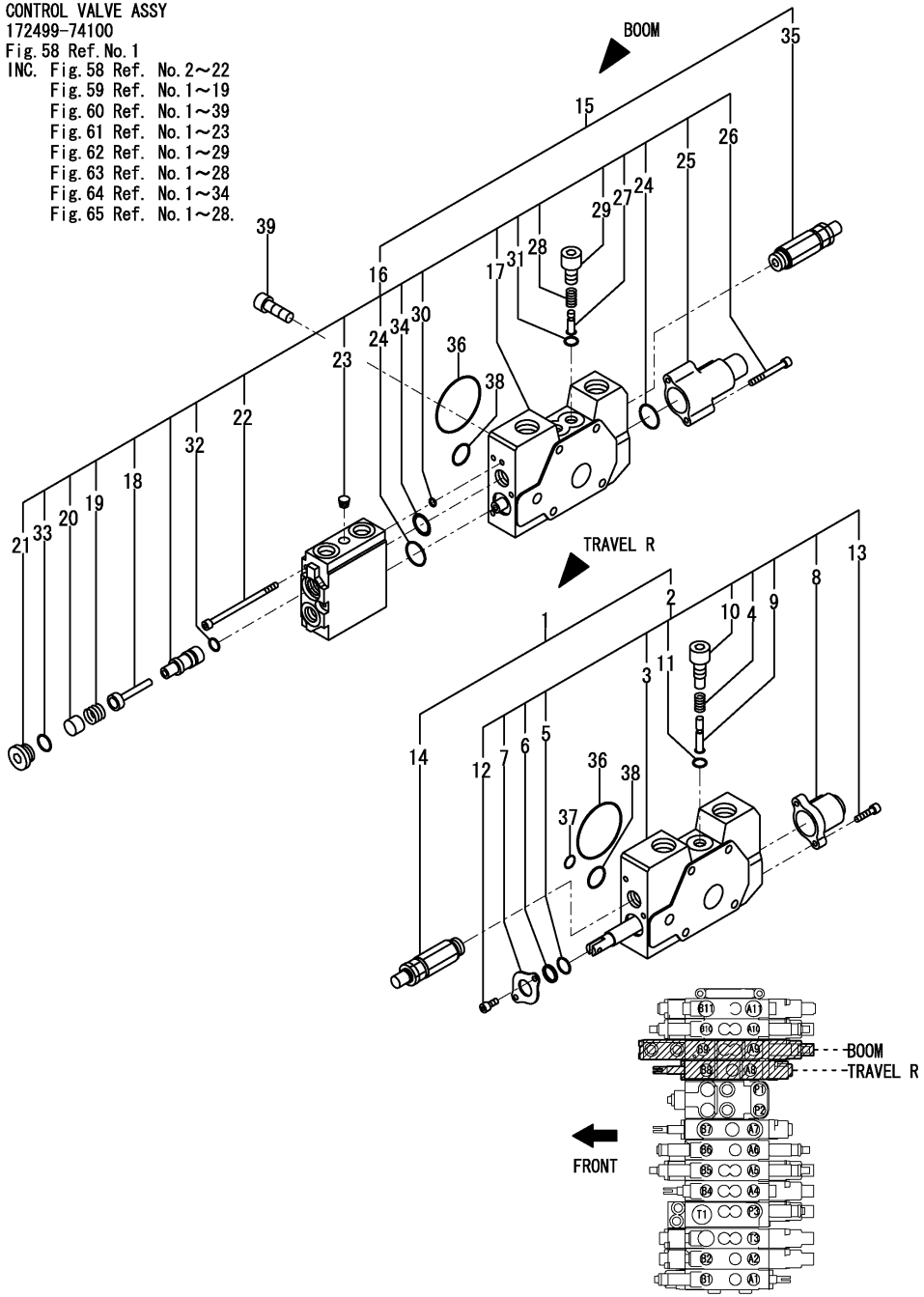

(A)=SV100(US) (D)=
(B)=SV100(AS) (E)=
(C)=SV100(NZ) (F)=

No.	Lev.	Parts No.	Description	Q'ty (A)	(B)	(C)	(D)	(E)	(F)	I	R
1	2	172499-74060	SECTION ASSY, TRAVEL	1	1	1					
2	3	172499-74200	SECTION, TRAVEL	1	1	1					
3	4	172499-70100	SPOOL ASSY, TRAVEL	1	1	1					
4	4	172458-74360	SPRING, VALVE	1	1	1					
5	4	172499-74560	O-RING, 1A P14.5	1	1	1					
6	4	172499-74570	WIPER	1	1	1					
7	4	172499-74580	PLATE, SEAL	1	1	1					
8	4	172499-74590	CAP	1	1	1					
9	4	172499-74760	VALVE, REVERSE	1	1	1					
10	4	172499-74770	STAY, VALVE	1	1	1					
11	4	24315-000110	O-RING, 1BP11.0	1	1	1					
12	4	26450-060122	BOLT, M6X 12	2	2	2					
13	4	26450-060222	BOLT, M6X 22	2	2	2					
14	3	172499-74340	VALVE,RELIEF 330/40	1	1	1					
15	2	172499-74070	SECTION ASSY, BOOM	1	1	1					
16	3	172499-74210	SECTION, BOOM	1	1	1					
17	4	172499-70110	SPOOL ASSY, BOOM	1	1	1					
18	4	172499-70120	PISTON A	1	1	1					
19	4	172499-70130	SPRING, VALVE	1	1	1					
20	4	172499-70140	PISTON C	1	1	1					
21	4	172499-70150	PLUG M18X1.5	1	1	1					
22	4	172499-70160	SWP HEX.BOLT 6X90	3	3	3					
23	4	172458-74460	PLUG GPM1/32	1	1	1					
24	4	172499-74640	O-RING, AS 1A 119	2	2	2					
25	4	172499-74650	COVER, PILOT	1	1	1					
26	4	172499-74670	SWP HEX.BOLT 6X45	2	2	2					
27	4	172499-74680	VALVE, REVERSE	2	2	2					
27-1	4	172490-74310	VALVE, REVERSE	2	2	2					R
	(A=M/#00515)	(B=M/#00515)	(C=M/#00515)								
28	4	172499-74690	SPRING, VALVE	2	2	2					
28-1	4	172490-74320	SPRING, VALVE	2	2	2					R
	(A=M/#00515)	(B=M/#00515)	(C=M/#00515)								
29	4	172499-74700	STAY, VALVE	2	2	2					
30	4	24315-000060	O-RING, 1BP6.0	1	1	1					
31	4	24315-000110	O-RING, 1BP11.0	2	2	2					
32	4	24315-000110	O-RING, 1BP11.0	1	1	1					
33	4	24315-000150	O-RING, 1BP15.0	1	1	1					
34	4	24315-000180	O-RING, 1BP18.0	1	1	1					
35	3	172499-74330	VALVE,RELIEF 310/40	1	1	1					
36	2	172499-74250	O-RING, 1B WG6	2	2	2					
37	2	24315-000140	O-RING, 1BP14.0	1	1	1					
38	2	24315-000200	O-RING, 1BP20.0	2	2	2					
39	2	26450-060402	BOLT, M6X 40	1	1	1					

N:Old $\overset{\text{Yes}}{\underset{\text{No}}{\leftrightarrows}}$ New, Q:Old $\overset{\text{No}}{\underset{\text{Yes}}{\leftrightarrows}}$ New, R:Old $\overset{\text{Yes}}{\underset{\text{Yes}}{\leftrightarrows}}$ New, S:Old $\overset{\text{No}}{\underset{\text{No}}{\leftrightarrows}}$ New, W:Add, Z:Discontinued, F:Interchangeable by set, K:Q'ty Change

Copyright (C) YANMAR CO., LTD. All RightsReserved.

Fig.61. CONTROL VALVE(4/8)

CONTROL VALVE ASSY
172499-74100
Fig.58 Ref.No.1
INC. Fig.58 Ref. No.2～22
Fig.59 Ref. No.1～19
Fig.60 Ref. No.1～39
Fig.61 Ref. No.1～23
Fig.62 Ref. No.1～29
Fig.63 Ref. No.1～28
Fig.64 Ref. No.1～34
Fig.65 Ref. No.1～28.

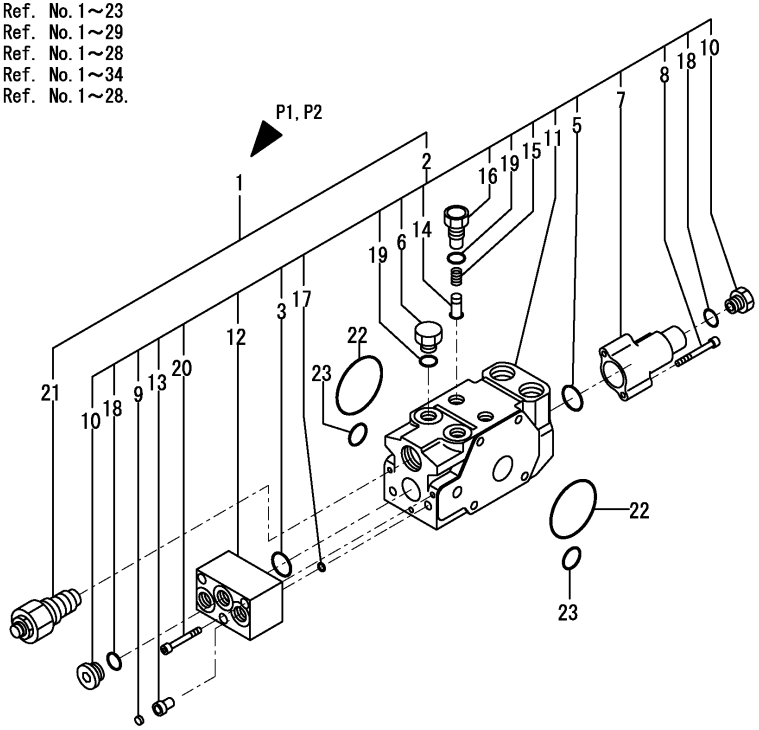

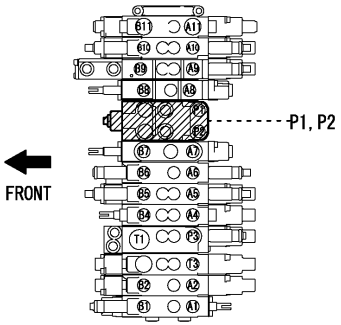

(A)=SV100(US) (D)=
(B)=SV100(AS) (E)=
(C)=SV100(NZ) (F)=

No.	Lev.	Parts No.	Description	Q'ty (A)	(B)	(C)	(D)	(E)	(F)	I	R
1	2	172499-74050	SECTION ASSY	1	1	1					
2	3	172499-74190	SECTION	1	1	1					
3	4	172458-74230	O-RING	1	1	1					
5	4	172499-74640	O-RING, AS 1A 119	1	1	1					
6	4	172458-74650	STAY, VALVE	2	2	2					
7	4	172499-74650	COVER, PILOT	1	1	1					
8	4	172499-74670	SWP HEX.BOLT 6X45	2	2	2					
9	4	172499-74860	FILTER	1	1	1					
10	4	172499-74890	PLUG,PF1/4	2	2	2					
11	4	172499-74940	SPOOL ASSY, P1P2	1	1	1					
12	4	172499-74950	BLOCK	1	1	1					
13	4	172499-74960	PLUG	1	1	1					
14	4	172499-74970	VALVE, REVERSE	2	2	2					
15	4	172499-74980	SPRING, VALVE	2	2	2					
16	4	172499-74990	STAY, VALVE	2	2	2					
17	4	24315-000060	O-RING, 1BP6.0	2	2	2					
18	4	24315-000110	O-RING, 1BP11.0	2	2	2					
19	4	24315-000140	O-RING, 1BP14.0	4	4	4					
20	4	26450-060402	BOLT, M6X 40	3	3	3					
21	3	172499-74300	VALVE,RELIEF 280/81.	1	1	1					
22	2	172499-74250	O-RING, 1B WG6	2	2	2					
23	2	24315-000200	O-RING, 1BP20.0	2	2	2					

N:Old ←Yes/No→ New, Q:Old ←No/Yes→ New, R:Old ←Yes/Yes→ New, S:Old ←No/No→ New, W:Add, Z:Discontinued, F:Interchangeable by set, K:Q'ty Change

Copyright (C) YANMAR CO., LTD. All RightsReserved.

Fig.62. CONTROL VALVE(5/8)

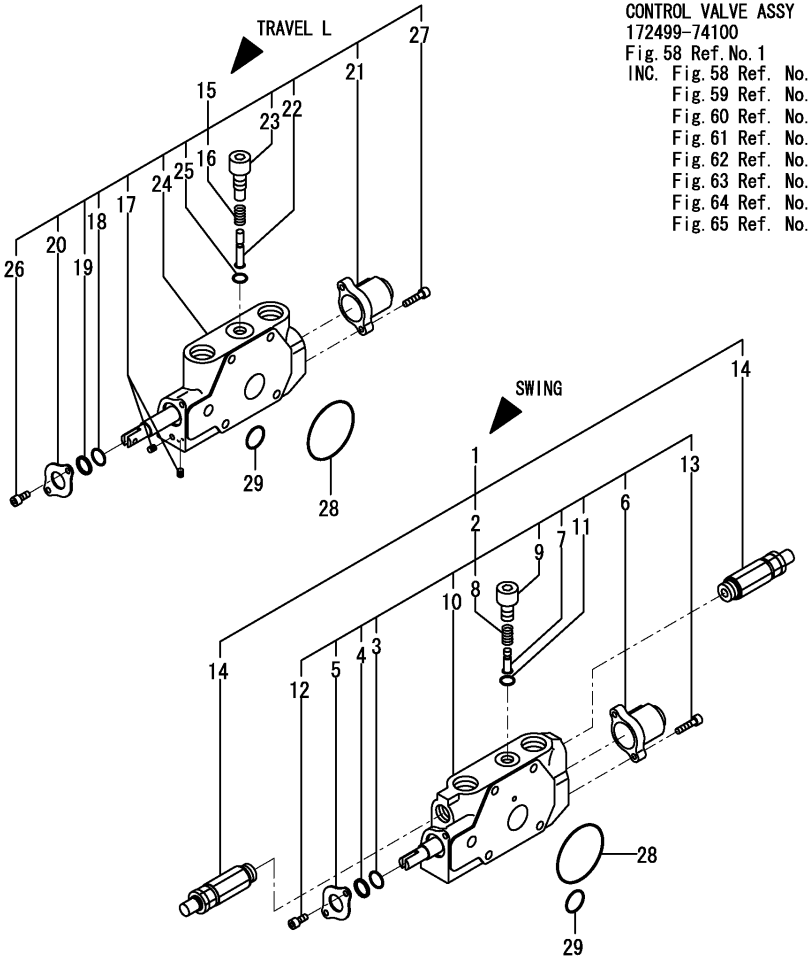

CONTROL VALVE ASSY
172499-74100
Fig.58 Ref.No.1
INC. Fig.58 Ref. No.2～22
Fig.59 Ref. No.1～19
Fig.60 Ref. No.1～39
Fig.61 Ref. No.1～23
Fig.62 Ref. No.1～29
Fig.63 Ref. No.1～28
Fig.64 Ref. No.1～34
Fig.65 Ref. No.1～28.

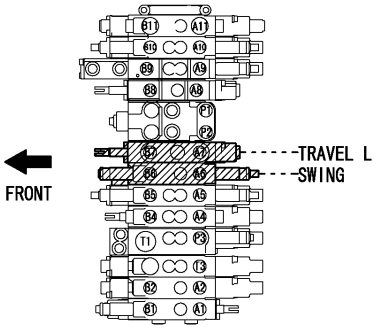

(A)=SV100(US) (D)=
(B)=SV100(AS) (E)=
(C)=SV100(NZ) (F)=

No.	Lev.	Parts No.	Description	Q'ty (A)	(B)	(C)	(D)	(E)	(F)	I	R
1	2	172499-74040	SECTION ASSY, SWING	1	1	1					
2	3	172499-74170	SECTION, SWING	1	1	1					
3	4	172499-74560	O-RING, 1A P14.5	1	1	1					
4	4	172499-74570	WIPER	1	1	1					
5	4	172499-74580	PLATE, SEAL	1	1	1					
6	4	172499-74590	CAP	1	1	1					
7	4	172499-74600	VALVE, REVERSE	1	1	1					
7-1	4	172490-74310	VALVE, REVERSE	1	1	1				R	
	(A=M/#00515)	(B=M/#00515)	(C=M/#00515)								
8	4	172499-74610	SPRING, VALVE	1	1	1					
8-1	4	172490-74320	SPRING, VALVE	1	1	1				R	
	(A=M/#00515)	(B=M/#00515)	(C=M/#00515)								
9	4	172499-74620	STAY, VALVE	1	1	1					
10	4	172499-74920	SPOOL ASSY, SWING	1	1	1					
11	4	24315-000110	O-RING, 1BP11.0	1	1	1					
12	4	26450-060122	BOLT, M6X 12	2	2	2					
13	4	26450-060222	BOLT, M6X 22	2	2	2					
14	3	172499-74330	VALVE,RELIEF 310/40	2	2	2					
15	2	172499-74180	SECTION, TRAVEL	1	1	1					
16	3	172458-74360	SPRING, VALVE	1	1	1					
17	3	172458-74460	PLUG GPM1/32	2	2	2					
18	3	172499-74560	O-RING, 1A P14.5	1	1	1					
19	3	172499-74570	WIPER	1	1	1					
20	3	172499-74580	PLATE, SEAL	1	1	1					
21	3	172499-74590	CAP	1	1	1					
22	3	172499-74760	VALVE, REVERSE	1	1	1					
23	3	172499-74770	STAY, VALVE	1	1	1					
24	3	172499-74930	SPOOL ASSY, TRAVEL	1	1	1					
25	3	24315-000110	O-RING, 1BP11.0	1	1	1					
26	3	26450-060122	BOLT, M6X 12	2	2	2					
27	3	26450-060222	BOLT, M6X 22	2	2	2					
28	2	172499-74250	O-RING, 1B WG6	2	2	2					
29	2	24315-000200	O-RING, 1BP20.0	2	2	2					

N:Old ←Yes/No→ New, Q:Old ←No/Yes→ New, R:Old ←Yes/Yes→ New, S:Old ←No/No→ New, W:Add, Z:Discontinued, F:Interchangeable by set, K:Q'ty Change

Copyright (C) YANMAR CO., LTD. All RightsReserved.

Fig.63. CONTROL VALVE(6/8)

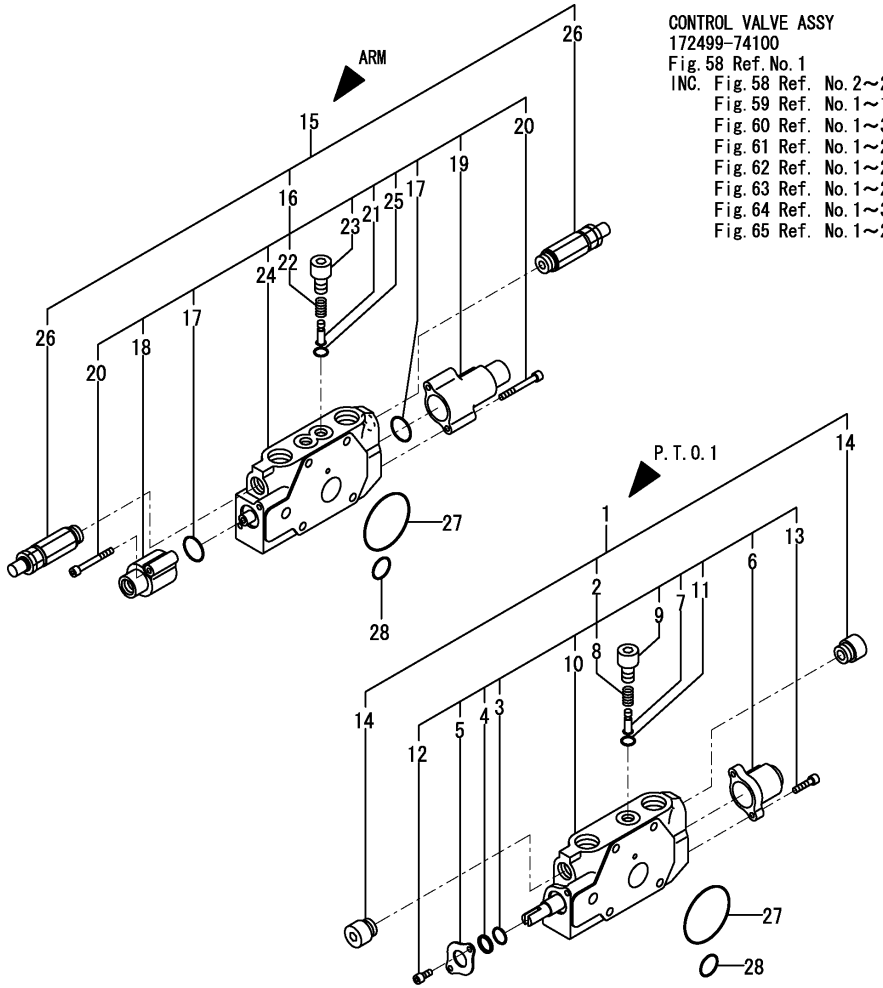

CONTROL VALVE ASSY
172499-74100
Fig.58 Ref.No.1
INC. Fig.58 Ref. No.2～22
Fig.59 Ref. No.1～19
Fig.60 Ref. No.1～39
Fig.61 Ref. No.1～23
Fig.62 Ref. No.1～29
Fig.63 Ref. No.1～28
Fig.64 Ref. No.1～34
Fig.65 Ref. No.1～28.

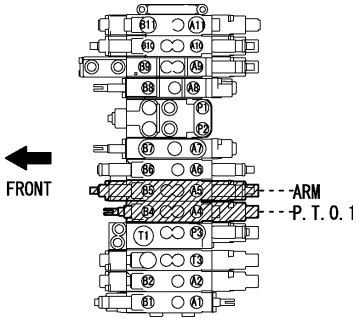

(A)=SV100(US) (D)=
(B)=SV100(AS) (E)=
(C)=SV100(NZ) (F)=

No.	Lev.	Parts No.	Description	Q'ty (A)	(B)	(C)	(D)	(E)	(F)	I	R
1	2	172499-74020	SECTION ASSY, PTO	1	1	1					
2	3	172499-74150	SECTION, PTO	1	1	1					
3	4	172499-74560	O-RING, 1A P14.5	1	1	1					
4	4	172499-74570	WIPER	1	1	1					
5	4	172499-74580	PLATE, SEAL	1	1	1					
6	4	172499-74590	CAP	1	1	1					
7	4	172499-74600	VALVE, REVERSE	1	1	1					
7-1	4	172490-74310	VALVE, REVERSE	1	1	1				R	
	(A=M/#00515)	(B=M/#00515)	(C=M/#00515)								
8	4	172499-74610	SPRING, VALVE	1	1	1					
8-1	4	172490-74320	SPRING, VALVE	1	1	1				R	
	(A=M/#00515)	(B=M/#00515)	(C=M/#00515)								
9	4	172499-74620	STAY, VALVE	1	1	1					
10	4	172499-74900	SPOOL ASSY, PTO	1	1	1					
11	4	24315-000110	O-RING, 1BP11.0	1	1	1					
12	4	26450-060122	BOLT, M6X 12	2	2	2					
13	4	26450-060222	BOLT, M6X 22	2	2	2					
14	3	172499-74350	PLUG ASSY	2	2	2					
15	2	172499-74030	SECTION ASSY, ARM	1	1	1					
16	3	172499-74160	SECTION, ARM	1	1	1					
17	4	172499-74640	O-RING, AS 1A 119	2	2	2					
18	4	172499-74650	COVER, PILOT	1	1	1					
19	4	172499-74660	COVER, PILOT	1	1	1					
20	4	172499-74670	SWP HEX.BOLT 6X45	4	4	4					
21	4	172499-74680	VALVE, REVERSE	2	2	2					
21-1	4	172490-74310	VALVE, REVERSE	2	2	2				R	
	(A=M/#00515)	(B=M/#00515)	(C=M/#00515)								
22	4	172499-74690	SPRING, VALVE	2	2	2					
22-1	4	172490-74320	SPRING, VALVE	2	2	2				R	
	(A=M/#00515)	(B=M/#00515)	(C=M/#00515)								
23	4	172499-74700	STAY, VALVE	2	2	2					
24	4	172499-74910	SPOOL ASSY, ARM	1	1	1					
25	4	24315-000110	O-RING, 1BP11.0	2	2	2					
26	3	172499-74330	VALVE,RELIEF 310/40	2	2	2					
27	2	172499-74250	O-RING, 1B WG6	2	2	2					
28	2	24315-000200	O-RING, 1BP20.0	2	2	2					

N:Old $\xleftarrow[\text{No}]{\text{Yes}}$ New, Q:Old $\xleftarrow[\text{Yes}]{\text{No}}$ New, R:Old $\xleftarrow[\text{Yes}]{\text{Yes}}$ New, S:Old $\xleftarrow[\text{No}]{\text{No}}$ New, W:Add, Z:Discontinued, F:Interchangeable by set, K:Q'ty Change

Copyright (C) YANMAR CO., LTD. All RightsReserved.

Fig.64. CONTROL VALVE(7/8)

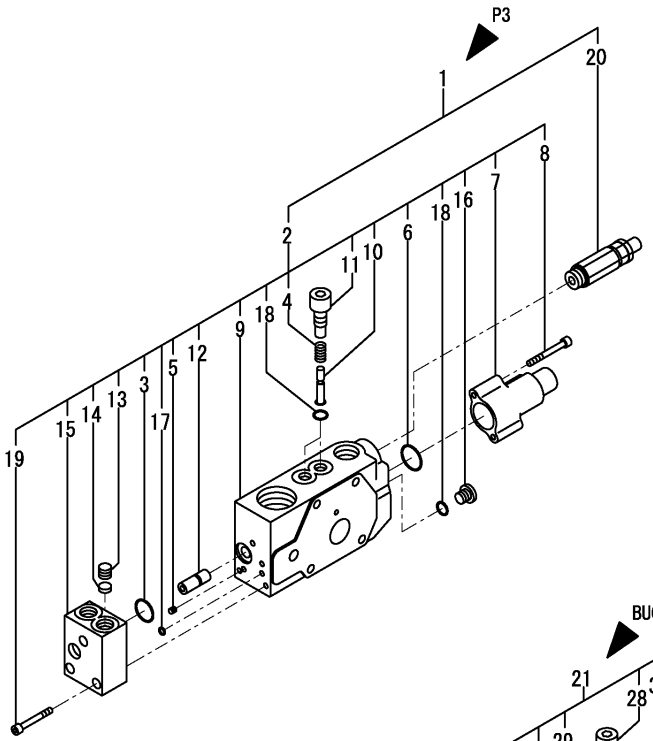

CONTROL VALVE ASSY
172499-74100
Fig. 58 Ref. No. 1
INC. Fig. 58 Ref. No. 2～22
Fig. 59 Ref. No. 1～19
Fig. 60 Ref. No. 1～39
Fig. 61 Ref. No. 1～23
Fig. 62 Ref. No. 1～29
Fig. 63 Ref. No. 1～28
Fig. 64 Ref. No. 1～34
Fig. 65 Ref. No. 1～28.

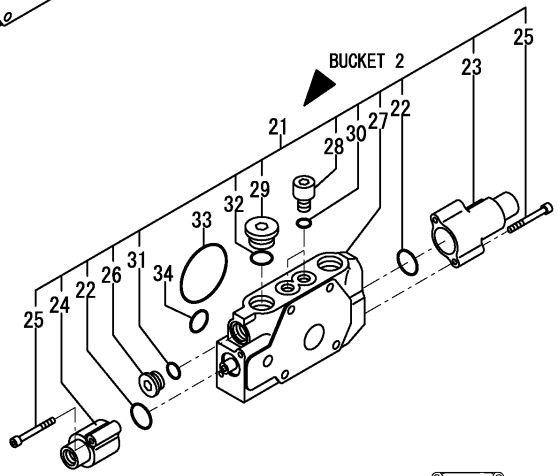

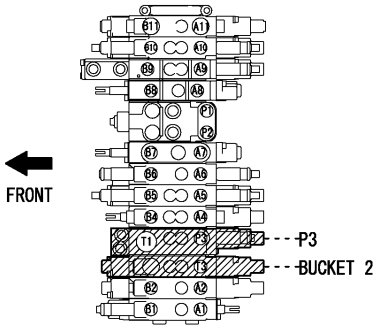

(A)=SV100(US)
(B)=SV100(AS)
(C)=SV100(NZ)
(D)=
(E)=
(F)=

No.	Lev.	Parts No.	Description	Q'ty (A)	(B)	(C)	(D)	(E)	(F)	I	R
1	2	172499-74010	SECTION ASSY	1	1	1					
2	3	172499-74140	SECTION	1	1	1					
3	4	172458-74230	O-RING	1	1	1					
4	4	172458-74360	SPRING, VALVE	2	2	2					
5	4	172458-74460	PLUG GPM1/32	2	2	2					
6	4	172499-74640	O-RING, AS 1A 119	1	1	1					
7	4	172499-74650	COVER, PILOT	1	1	1					
8	4	172499-74670	SWP HEX.BOLT 6X45	2	2	2					
9	4	172499-74750	SPOOL ASSY, P3	1	1	1					
10	4	172499-74760	VALVE, REVERSE	2	2	2					
11	4	172499-74770	STAY, VALVE	2	2	2					
12	4	172499-74780	PISTON	1	1	1					
13	4	172499-74850	PLUG	1	1	1					
14	4	172499-74860	FILTER	1	1	1					
15	4	172499-74870	BLOCK	1	1	1					
16	4	172499-74890	PLUG,PF1/4	1	1	1					
17	4	24315-000050	O-RING, 1BP5.0	2	2	2					
18	4	24315-000110	O-RING, 1BP11.0	3	3	3					
19	4	26450-060302	BOLT, M6X 30	3	3	3					
20	3	172499-74310	VALVE,RELIEF 250/61.	1	1	1					
21	2	172499-74130	SECTION, BUCKET	1	1	1					
22	3	172499-74640	O-RING, AS 1A 119	2	2	2					
23	3	172499-74650	COVER, PILOT	1	1	1					
24	3	172499-74660	COVER, PILOT	1	1	1					
25	3	172499-74670	SWP HEX.BOLT 6X45	4	4	4					
26	3	172499-74710	PLUG,PF3/8	1	1	1					
27	3	172499-74720	SPOOL ASSY, BUCKET	1	1	1					
28	3	172499-74730	STAY, VALVE	2	2	2					
29	3	172499-74740	PLUG,PF1/2	1	1	1					
30	3	24315-000110	O-RING, 1BP11.0	2	2	2					
31	3	24315-000140	O-RING, 1BP14.0	1	1	1					
32	3	24315-000180	O-RING, 1BP18.0	1	1	1					
33	2	172499-74250	O-RING, 1B WG6	1	1	1					
34	2	24315-000200	O-RING, 1BP20.0	1	1	1					

N:Old ←Yes/No→ New, Q:Old ←No/Yes→ New, R:Old ←Yes/Yes→ New, S:Old ←No/No→ New, W:Add, Z:Discontinued, F:Interchangeable by set, K:Q'ty Change

Copyright (C) YANMAR CO., LTD. All RightsReserved.

Fig.65. CONTROL VALVE(8/8)

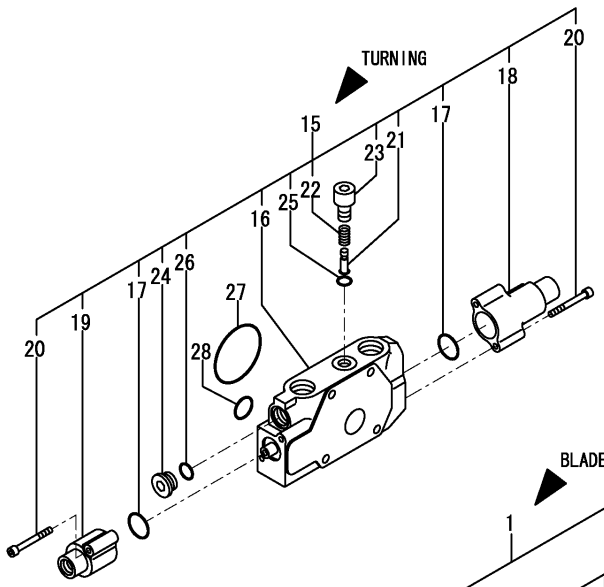

CONTROL VALVE ASSY
172499-74100
Fig. 58 Ref. No. 1
INC. Fig. 58 Ref. No. 2～22
Fig. 59 Ref. No. 1～19
Fig. 60 Ref. No. 1～39
Fig. 61 Ref. No. 1～23
Fig. 62 Ref. No. 1～29
Fig. 63 Ref. No. 1～28
Fig. 64 Ref. No. 1～34
Fig. 65 Ref. No. 1～28.

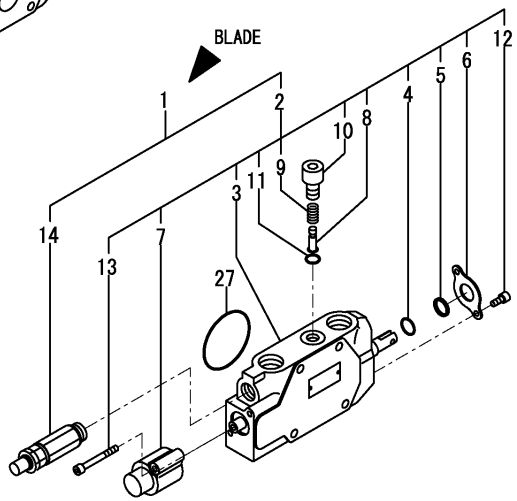

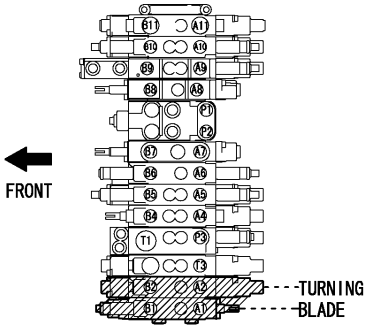

(A)=SV100(US) (D)=
(B)=SV100(AS) (E)=
(C)=SV100(NZ) (F)=

No.	Lev.	Parts No.	Description	Q'ty (A)	(B)	(C)	(D)	(E)	(F)	I	R
1	2	172499-74000	SECTION ASSY, BLADE	1	1	1					
2	3	172499-74110	SECTION, BLADE	1	1	1					
3	4	172499-74550	SPOOL ASSY, BLADE	1	1	1					
4	4	172499-74560	O-RING, 1A P14.5	1	1	1					
5	4	172499-74570	WIPER	1	1	1					
6	4	172499-74580	PLATE, SEAL	1	1	1					
7	4	172499-74590	CAP	1	1	1					
8	4	172499-74600	VALVE, REVERSE	1	1	1					
8-1	4	172490-74310	VALVE, REVERSE	1	1	1					R
	(A=M/#00515)	(B=M/#00515)	(C=M/#00515)								
9	4	172499-74610	SPRING, VALVE	1	1	1					
9-1	4	172490-74320	SPRING, VALVE	1	1	1					R
	(A=M/#00515)	(B=M/#00515)	(C=M/#00515)								
10	4	172499-74620	STAY, VALVE	1	1	1					
11	4	24315-000110	O-RING, 1BP11.0	1	1	1					
12	4	26450-060122	BOLT, M6X 12	2	2	2					
13	4	26450-060222	BOLT, M6X 22	2	2	2					
14	3	172499-74320	VALVE,RELIEF 180/61.	1	1	1					
15	2	172499-74120	SECTION, SWING	1	1	1					
15-1	2	172499-74121	SECTION, SWING	1	1	1					S
	(A=M/#01188)	(B=M/#01188)	(C=M/#01188)								
16	3	172499-74630	SPOOL ASSY, SWING	1	1	1					
16-1	3	172499-74631	SPOOL ASSY, SWING	1	1	1					S
	(A=M/#01188)	(B=M/#01188)	(C=M/#01188)								
17	3	172499-74640	O-RING, AS 1A 119	2	2	2					
18	3	172499-74650	COVER, PILOT	1	1	1					
19	3	172499-74660	COVER, PILOT	1	1	1					
20	3	172499-74670	SWP HEX.BOLT 6X45	4	4	4					
21	3	172499-74680	VALVE, REVERSE	1	1	1					
21-1	3	172490-74310	VALVE, REVERSE	1	1	1					R
	(A=M/#00515)	(B=M/#00515)	(C=M/#00515)								
22	3	172499-74690	SPRING, VALVE	1	1	1					
22-1	3	172490-74320	SPRING, VALVE	1	1	1					R
	(A=M/#00515)	(B=M/#00515)	(C=M/#00515)								
23	3	172499-74700	STAY, VALVE	1	1	1					
24	3	172499-74710	PLUG,PF3/8	1	1	1					
25	3	24315-000110	O-RING, 1BP11.0	1	1	1					
26	3	24315-000140	O-RING, 1BP14.0	1	1	1					
27	2	172499-74250	O-RING, 1B WG6	2	2	2					
28	2	24315-000200	O-RING, 1BP20.0	1	1	1					

N:Old $\overset{\text{Yes}}{\underset{\text{No}}{\leftrightarrow}}$ New, Q:Old $\overset{\text{No}}{\underset{\text{Yes}}{\leftrightarrow}}$ New, R:Old $\overset{\text{Yes}}{\underset{\text{Yes}}{\leftrightarrow}}$ New, S:Old $\overset{\text{No}}{\underset{\text{No}}{\leftrightarrow}}$ New, W:Add, Z:Discontinued, F:Interchangeable by set, K:Q'ty Change

Copyright (C) YANMAR CO., LTD. All RightsReserved.

Fig.66. SOLENOID VALVE

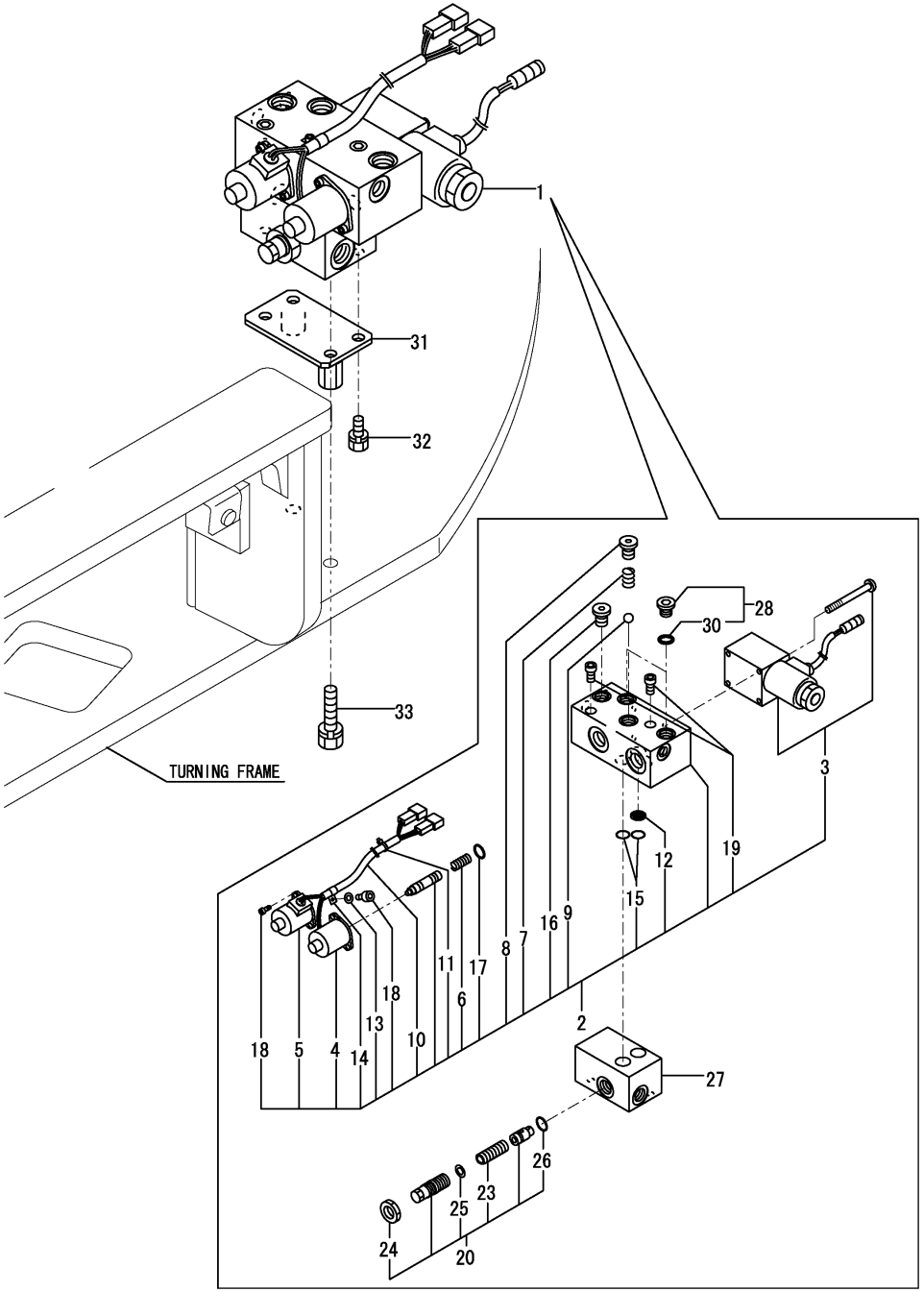

(A)=SV100(US) (D)=
(B)=SV100(AS) (E)=
(C)=SV100(NZ) (F)=

No.	Lev.	Parts No.	Description	Q'ty (A)	(B)	(C)	(D)	(E)	(F)	I	R
1	1	172499-74410	VALVE ASSY,SOL	1	1	1					
2	2	172956-73110	VALVE ASSY	1	1	1					
3	3	172956-73121	VALVE, SOLENOID	1	1	1					
4	3	172456-73580	SOLENOID (A	1	1	1					
4-1	3	172989-73160	SOLENOID (A	1	1	1					R
	(A=MXXXXX)	(B=MXXXXX)	(C=MXXXXX)								
5	3	172456-73590	SOLENOID (B	1	1	1					
5-1	3	172989-73150	SOLENOID (B	1	1	1					R
	(A=MXXXXX)	(B=MXXXXX)	(C=MXXXXX)								
6	3	172456-73870	SPRING	2	2	2					
7	3	172456-73880	SPRING	1	1	1					
8	3	172456-73890	PLUG ASSY	1	1	1					
9	3	172456-73900	BALL, STEEL	1	1	1					
10	3	172456-73910	COVER	1	1	1					
11	3	172456-73920	BAND	2	2	2					
12	3	172456-73930	ELEMENT, FILTER	1	1	1					
13	3	172456-73940	WASHER	1	1	1					
14	3	172456-73950	CLAMP	1	1	1					
15	3	172456-73960	O-RING	2	2	2					
16	3	172456-73970	PLUG ASSY	1	1	1					
17	3	24311-000160	O-RING, 1AP16.0	2	2	2					
18	3	26450-040102	BOLT, M4X 10	5	5	5					
19	3	26450-080302	BOLT, M8X 30	2	2	2					
20	2	172164-73470	VALVE ASSY, RELIEF	1	1	1					
23	3	172164-73380	SPRING	1	1	1					
24	3	172164-73390	NUT	1	1	1					
25	3	172164-73510	SEAT, SPRING	1	1	1					
26	3	172141-74430	O-RING	1	1	1					
27	2	172499-74420	BODY	1	1	1					
28	2	172142-74600	PLUG	2	2	2					
30	3	24315-000110	O-RING, 1BP11.0	2	2	2					
31	1	172499-74500	MOUNT ASSY,VALVE	1	1	1					
31-1	1	172499-74501	MOUNT ASSY,VALVE	1	1	1					N
	(A=M/#00853)	(B=M/#00853)	(C=M/#00853)								
32	1	26013-080162	BOLT, M8X 16	2	2	2					
33	1	26013-100402	BOLT, M10X 40	2	2	2					

N:Old $\xleftarrow[\text{No}]{\text{Yes}}$ New, Q:Old $\xleftarrow[\text{Yes}]{\text{No}}$ New, R:Old $\xleftarrow[\text{Yes}]{\text{Yes}}$ New, S:Old $\xleftarrow[\text{No}]{\text{No}}$ New, W:Add, Z:Discontinued, F:Interchangeable by set, K:Q'ty Change

Copyright (C) YANMAR CO., LTD. All RightsReserved.

Fig.67. REMOTE CONTROL VALVE

(A)=SV100(US)
(B)=SV100(AS)
(C)=SV100(NZ)
(D)=
(E)=
(F)=

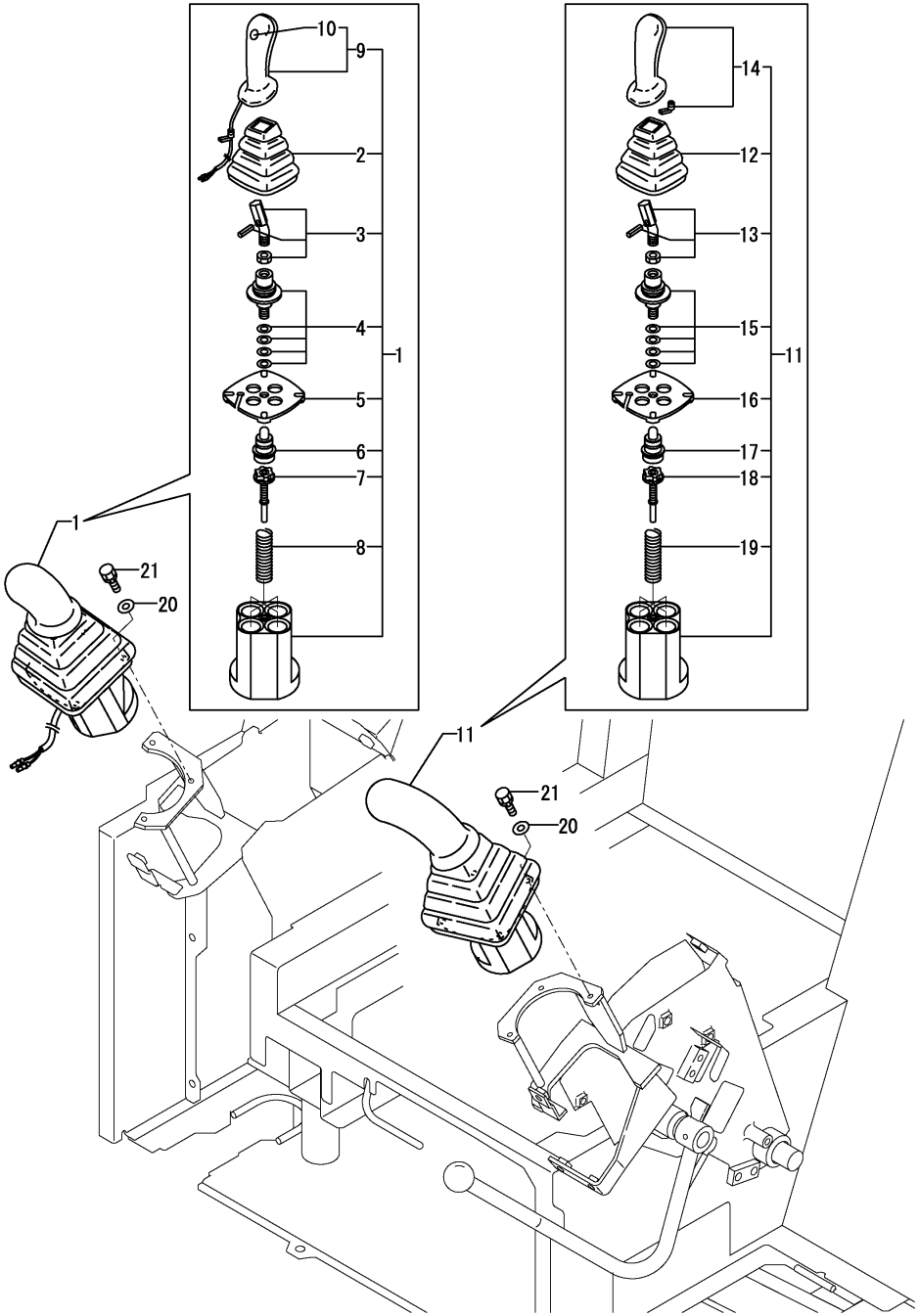

No.	Lev.	Parts No.	Description	Q'ty (A)	(B)	(C)	(D)	(E)	(F)	I	R
1	1	172463-74511	VALVE ASSY, R.US	1	1	1					
2	2	172441-74030	BELLOWS	1	1	1					
3	2	172441-74040	COMMAND KIT	1	1	1					
4	2	172463-74530	CARDAN KIT	1	1	1					
5	2	172463-74540	RETAINING PLATE	1	1	1					
6	2	172463-74551	PLUNGER KIT	1	1	1					
7	2	172463-74561	REGULATION KIT	4	4	4					
8	2	172463-74570	SPRING KIT	1	1	1					
9	2	172463-74590	HANDLE R	1	1	1					
10	3	172463-74580	SWITCH, BUTTON	1	1	1					
11	1	172463-74521	VALVE ASSY, L.US	1	1	1					
12	2	172441-74030	BELLOWS	1	1	1					
13	2	172441-74040	COMMAND KIT	1	1	1					
14	2	172441-74050	HANDLE L	1	1	1					
15	2	172463-74530	CARDAN KIT	1	1	1					
16	2	172463-74540	RETAINING PLATE	1	1	1					
17	2	172463-74551	PLUNGER KIT	1	1	1					
18	2	172463-74561	REGULATION KIT	4	4	4					
19	2	172463-74570	SPRING KIT	1	1	1					
20	1	22137-060000	WASHER, 6	6	6	6					
21	1	26013-060202	BOLT, M6X 20	6	6	6					

N:Old $\overset{\text{Yes}}{\underset{\text{No}}{\leftrightarrows}}$ New, Q:Old $\overset{\text{No}}{\underset{\text{Yes}}{\leftrightarrows}}$ New, R:Old $\overset{\text{Yes}}{\underset{\text{Yes}}{\leftrightarrows}}$ New, S:Old $\overset{\text{No}}{\underset{\text{No}}{\leftrightarrows}}$ New, W:Add, Z:Discontinued, F:Interchangeable by set, K:Q'ty Change

Copyright (C) YANMAR CO., LTD. All RightsReserved.

Fig.68. 2-WAY VALVE

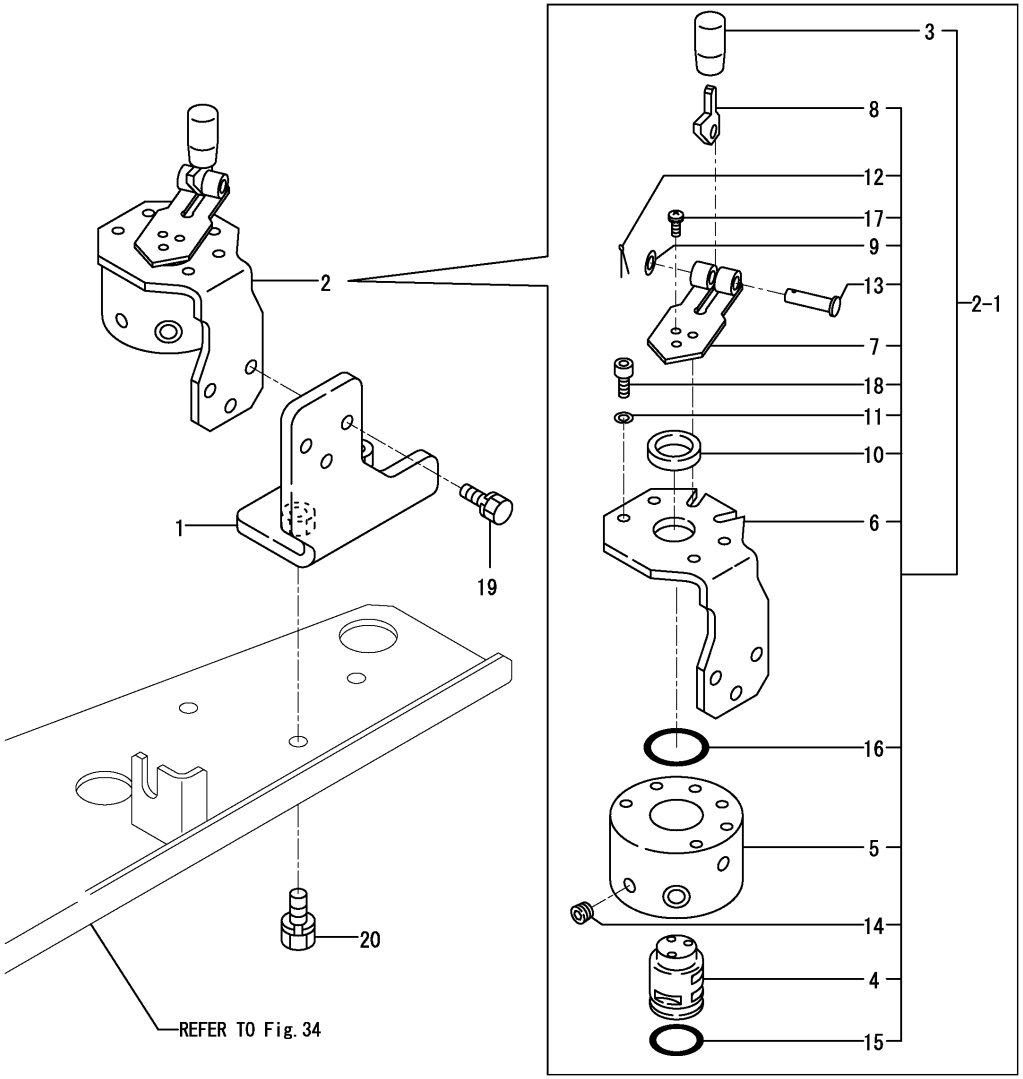

(A)=SV100(US) (D)=
(B)=SV100(AS) (E)=
(C)=SV100(NZ) (F)=

No.	Lev.	Parts No.	Description	Q'ty (A)	(B)	(C)	(D)	(E)	(F)	I	R
1	1	172463-74300	BRACKET ASSY,2W	1	1	1					
2	1	172A36-74700	VALVE ASSY,2WAY	1	1	1					
2-1	1	172A36-74690	VALVE ASSY,2WAY	1	1	1				N	
	(A=M/#00828)	(B=M/#00828)	(C=M/#00828)								
3	2	172157-58830	KNOB, 6.5X18X35	1	1	1					
4	3	172437-74711	SHAFT	1	1	1					
5	3	172437-74720	BLOCK,VALVE	1	1	1					
6	3	172437-74732	STAY ASSY	1	1	1					
7	3	172A36-74750	LEVER	1	1	1					
8	3	172A36-74780	PLATE,LOCK	1	1	1					
9	3	22117-080000	WASHER, 8	1	1	1					
10	3	22137-240000	WASHER, 24	1	1	1					
11	3	22217-060000	WASHER, SPRING 6	4	4	4					
12	3	22417-200160	PIN, COTTER 2.0X16	1	1	1					
13	3	22487-080300	PIN, H 8X 30	1	1	1					
14	3	23871-010000	PLUG, R01	4	4	4					
15	3	24311-000250	O-RING, 1AP25.0	1	1	1					
16	3	24311-000320	O-RING, 1AP32.0	1	1	1					
17	3	26022-050122	SCREW, M5X12	3	3	3					
18	3	26450-060162	BOLT, M6X 16	4	4	4					
19	1	26013-080252	BOLT, M8X 25	3	3	3					
20	1	26013-100252	BOLT, M10X 25	2	2	2					

N:Old $\frac{\text{Yes}}{\text{No}}$ New, Q:Old $\frac{\text{No}}{\text{Yes}}$ New, R:Old $\frac{\text{Yes}}{\text{Yes}}$ New, S:Old $\frac{\text{No}}{\text{No}}$ New, W:Add, Z:Discontinued, F:Interchangeable by set, K:Q'ty Change

Copyright (C) YANMAR CO., LTD. All RightsReserved.

Fig.69. OIL COOLER

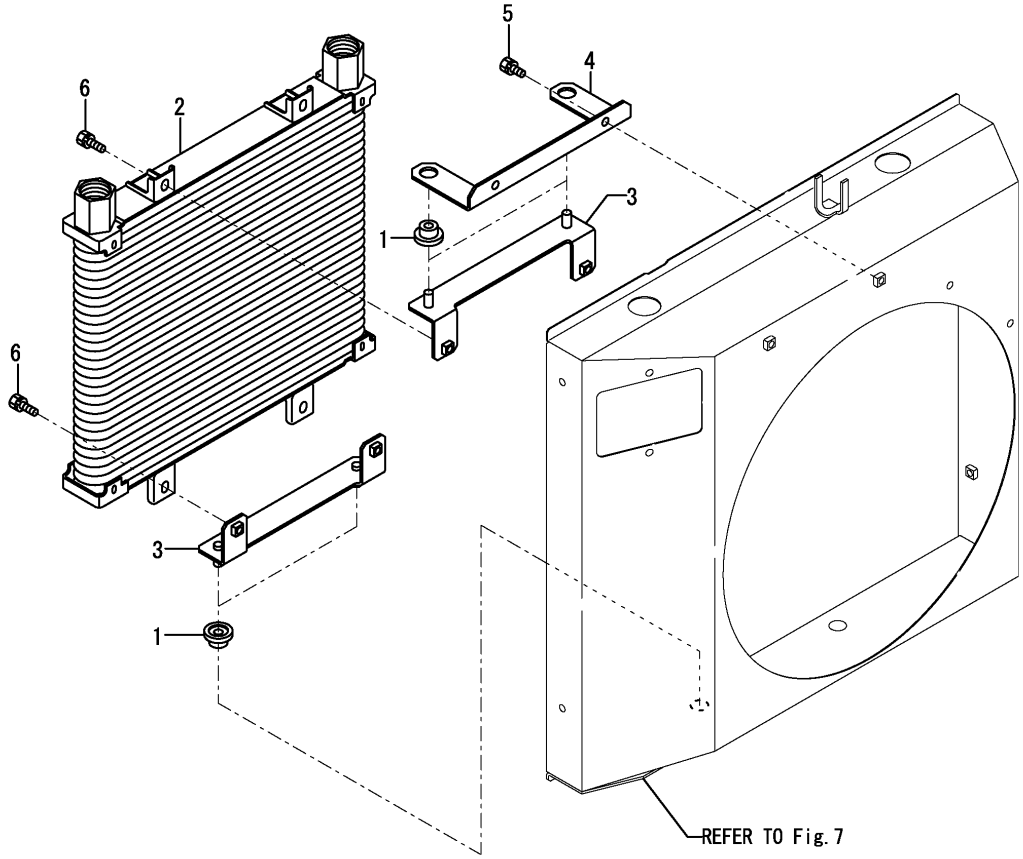

(A)=SV100(US) (D)=
(B)=SV100(AS) (E)=
(C)=SV100(NZ) (F)=

No.	Lev.	Parts No.	Description	Q'ty (A)	(B)	(C)	(D)	(E)	(F)	I	R
1	1	172446-13330	ABSOBER,SHOCK	4	4	4					
2	1	172499-74800	COOLER, OIL	1	1	1					
3	1	172499-74810	BRACKET ASSY,O/C	2	2	2					
4	1	172499-74830	STAY, BRACKET	1	1	1					
5	1	26013-080162	BOLT, M8X 16	2	2	2					
6	1	26014-080202	BOLT, M8X 20	4	4	4					

N:Old $\xleftarrow[\text{No}]{\text{Yes}}$ New, Q:Old $\xleftarrow[\text{Yes}]{\text{No}}$ New, R:Old $\xleftarrow[\text{Yes}]{\text{Yes}}$ New, S:Old $\xleftarrow[\text{No}]{\text{No}}$ New, W:Add, Z:Discontinued, F:Interchangeable by set, K:Q'ty Change

Copyright (C) YANMAR CO., LTD. All RightsReserved.

Fig.70. HYD.OIL TANK

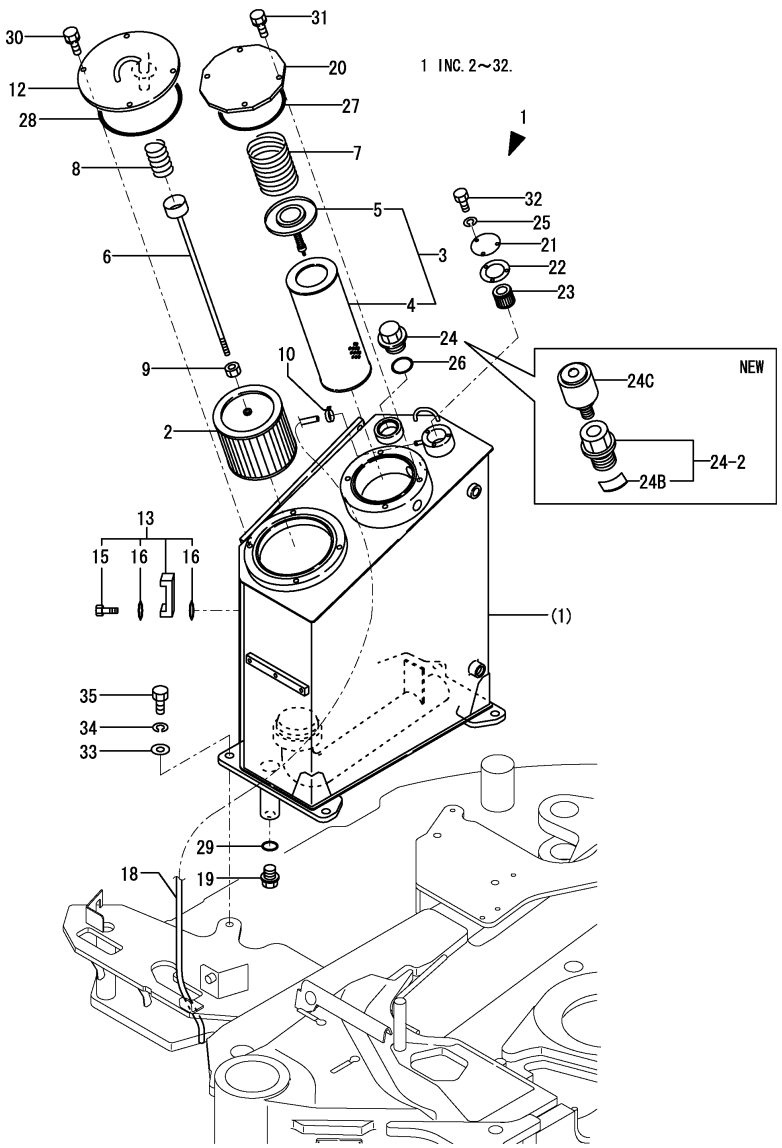

Remarks
(1)PLEASE USE THIS PART WITH FOLLOWING LABEL AT THE SAME TIME.
REF NO.36A.
(2)LABEL IS NOT ILLUSTRATED.
(3)D=REF.NO.18 11MM,
NO.18-1 14.5MM.

(A)=SV100(US) (D)=
(B)=SV100(AS) (E)=
(C)=SV100(NZ) (F)=

No.	Lev.	Parts No.	Description	Q'ty (A)	(B)	(C)	(D)	(E)	(F)	I	R
1	1	772499-75100	TANK ASSY, RESERVOIR	1	1	1					1
1-1	1	772499-75100-1	TANK ASSY, RESERVOIR	1	1	1				S	1
	(A=M/#00758)	(B=M/#00758)	(C=M/#00758)								
2	2	172162-73700	STRAINER, SUCTION	1	1	1					
3	2	172187-73700	FILTER ASSY, RETURN	1	1	1					
4	3	172187-73730	ELEMENT, FILTER	1	1	1					
5	3	172112-74971	VALVE, BY-PASS	1	1	1					
6	2	172141-73710	ROD, STRAINER	1	1	1					
7	2	172112-75770	SPRING, FILTER	1	1	1					
8	2	172112-75780	SPRING, FILTER	1	1	1					
9	2	26716-100002	NUT, M10	1	1	1					
10	2	124766-59050	CLIP, HOSE 12	1	1	1					
10-1	2	23010-014000	CLAMP, 14	1	1	1				S	
	(A=M/#01521)	(B=M/#01521)	(C=M/#01521)								
10-2	2	23000-013000	CLAMP, 13	1	1	1				N	
	(A=M/#01522)	(B=M/#01522)	(C=M/#01522)								
12	2	172455-75240	COVER ASSY	1	1	1					
12-1	2	172455-75240-1	COVER ASSY	1	1	1				S	
	(A=M/#00758)	(B=M/#00758)	(C=M/#00758)								
13	2	172455-75270	GAUGE ASSY, OIL	1	1	1					
15	3	172455-75290	BOLT M10	2	2	2					
16	3	172455-75300	O-RING	4	4	4					
18	2	172455-75320	HOSE	1	1	1					3
18-1	2	172A21-75110	HOSE	1	1	1				S	3
	(A=M/#01521)	(B=M/#01521)	(C=M/#01521)								
19	2	172455-75330	DRAIN PLIG 24	1	1	1					
20	2	172187-75340	COVER, TANK	1	1	1					
20-1	2	172187-75340-2	COVER, TANK	1	1	1				S	
	(A=M/#00758)	(B=M/#00758)	(C=M/#00758)								
21	2	172165-75450-2	PLATE (GRAY:73)	1	1	1					
21-1	2	172165-75450-3	PLATE (GRAY:49)	1	1	1				S	
	(A=M/#00758)	(B=M/#00758)	(C=M/#00758)								
22	2	172165-75460	GASKET	1	1	1					
23	2	172165-75481	ELEMENT	1	1	1					
24	2	172116-75850-3	PLUG, OIL FEED	1	1	1					
24-1	2	172116-75850-B	PLUG, OIL FEED	1	1	1				S	
	(A=M/#00758)	(B=M/#00758)	(C=M/#00758)								
24-2	2	172519-75250-2	PLUG ASSY	1	1	1				S	
	(A=M/#01521)	(B=M/#01521)	(C=M/#01521)								
24B	3	172519-75270	PLATE, BAFFLE	1	1	1					
24C	2	172312-75130	BREATHER, AIR	1	1	1				W	
	(A=M/#01521)	(B=M/#01521)	(C=M/#01521)								
25	2	22217-050000	WASHER, SPRING 5	3	3	3					
26	2	24311-000380	O-RING, 1AP38.0	1	1	1					
27	2	24321-001350	O-RING, 1AG135.0	1	1	1					
28	2	24321-001700	O-RING, 1AG170.0	1	1	1					
29	2	24341-000300	O-RING, 1AS30.0	1	1	1					
30	2	26013-100202	BOLT, M10X 20	4	4	4					
30-1	2	26014-100202	BOLT, M10X 20	4	4	4				R	
	(A=M/#01571)	(B=M/#01571)	(C=M/#01571)								
31	2	26013-100202	BOLT, M10X 20	4	4	4					

N:Old $\xleftrightarrow[\text{No}]{\text{Yes}}$ New, Q:Old $\xleftrightarrow[\text{Yes}]{\text{No}}$ New, R:Old $\xleftrightarrow[\text{Yes}]{\text{Yes}}$ New, S:Old $\xleftrightarrow[\text{No}]{\text{No}}$ New, W:Add, Z:Discontinued, F:Interchangeable by set, K:Q'ty Change

++ CONTINUE ++

Copyright (C) YANMAR CO., LTD. All RightsReserved.

Fig.70. HYD.OIL TANK

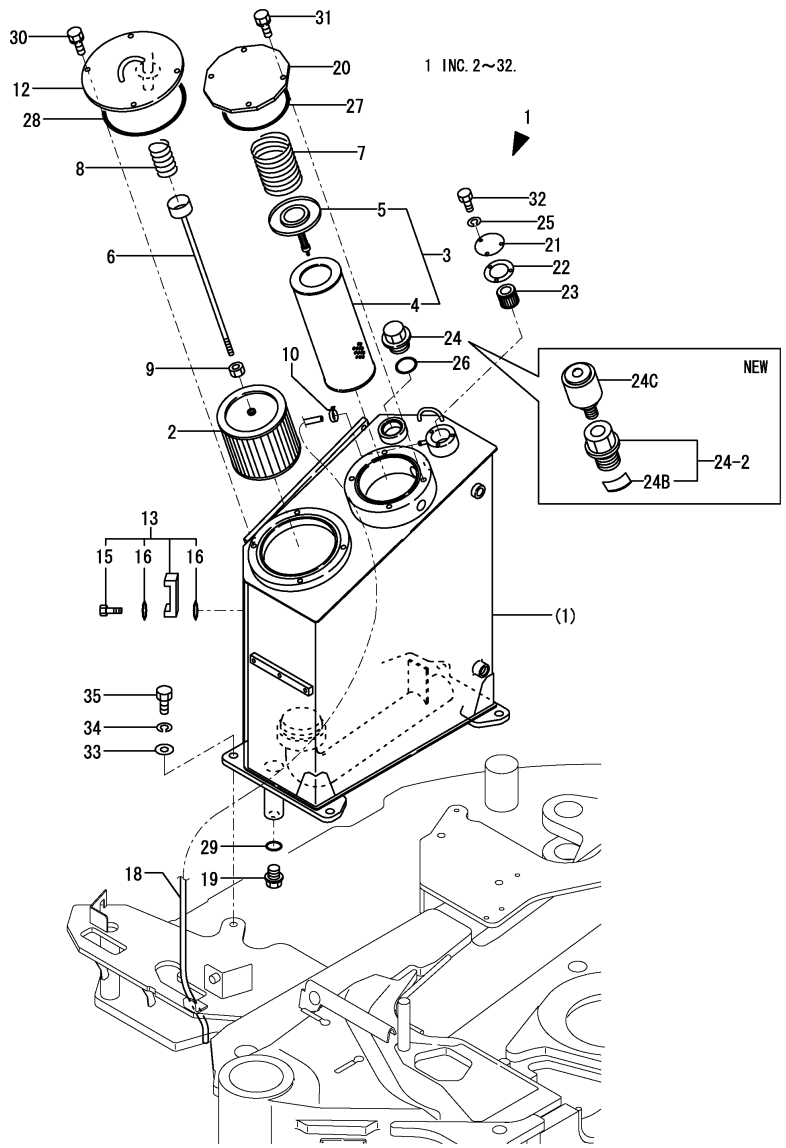

Remarks
(1)PLEASE USE THIS PART WITH FOLLOW-
ING LABEL AT THE SAME TIME.
REF NO.36A.
(2)LABEL IS NOT ILLUSTRATED.
(3)D=REF.NO.18 11MM,
NO.18-1 14.5MM.

(A)=SV100(US) (D)=
(B)=SV100(AS) (E)=
(C)=SV100(NZ) (F)=

No.	Lev.	Parts No.	Description	Q'ty (A)	(B)	(C)	(D)	(E)	(F)	I	R
31-1	2	26014-100202	BOLT, M10X 20	4	4	4				R	
	(A=M/#01571)	(B=M/#01571)	(C=M/#01571)								
32	2	26116-050102	BOLT, M5X 10 PLATED	3	3	3					
33	1	22137-160000	WASHER, 16	4	4	4					
34	1	22217-160000	WASHER, SPRING 16	4	4	4					
35	1	26116-160402	BOLT, M16X 40 PLATED	4	4	4					
36A	1	172437-03322	LABEL, HYD.OIL TANK	1	1	1					2

N:Old ←Yes/No→ New, Q:Old ←No/Yes→ New, R:Old ←Yes/Yes→ New, S:Old ←No/No→ New, W:Add, Z:Discontinued, F:Interchangeable by set, K:Q'ty Change

Copyright (C) YANMAR CO., LTD. All RightsReserved.

Fig.71. HYD.OIL PIPING(TANK - PUMP - CONTROL VALVE)

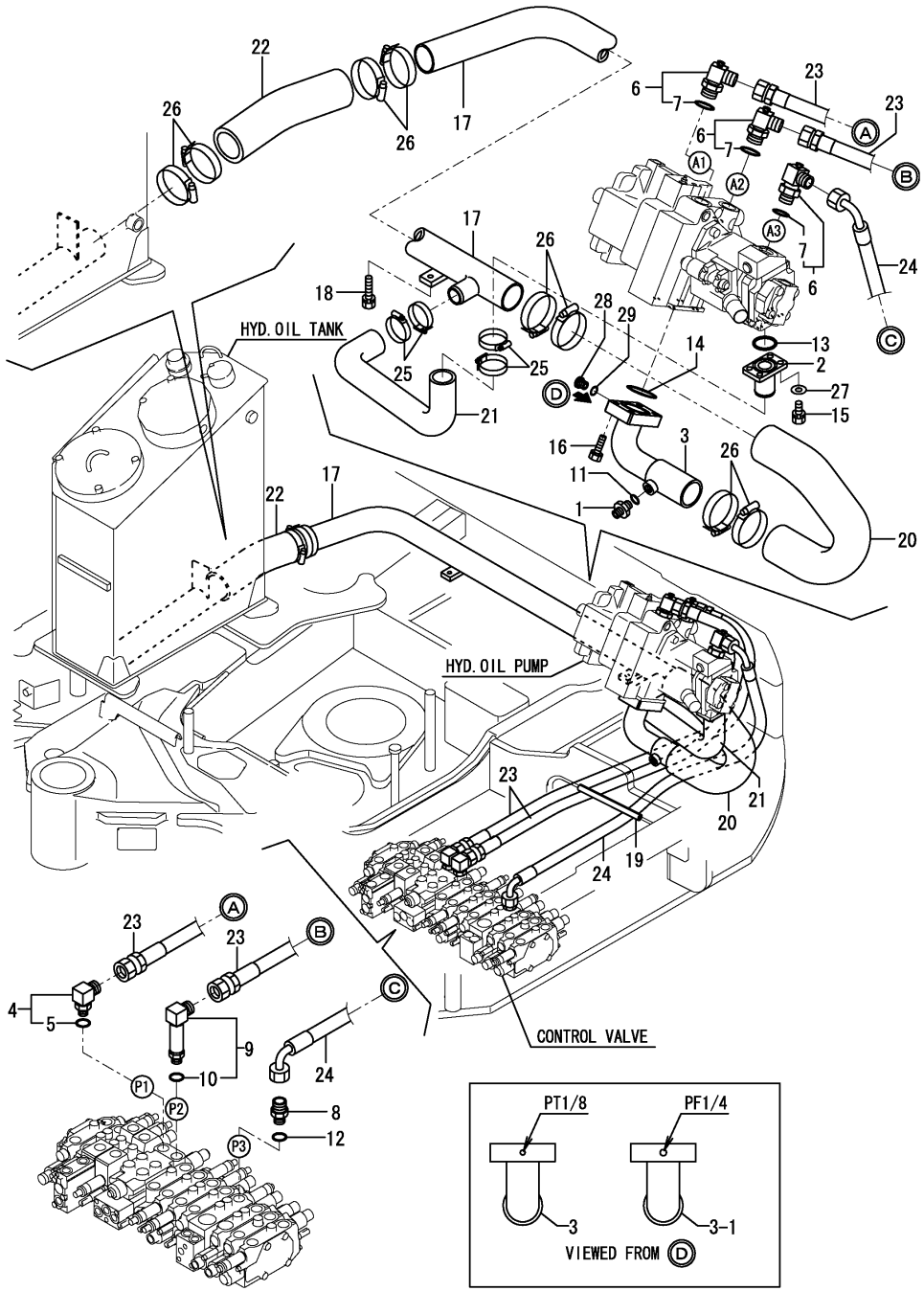

(A)=SV100(US) (D)=
(B)=SV100(AS) (E)=
(C)=SV100(NZ) (F)=

No.	Lev.	Parts No.	Description	Q'ty (A)	(B)	(C)	(D)	(E)	(F)	I	R
1	1	172730-75141	ADAPTER	1	1	1					
2	1	172422-76100	FLANGE	1	1	1					
3	1	172499-76101	FLANGE ASSY	1	1	1					
3-1	1	172499-76102	FLANGE ASSY	1	1	1				S	
	(A=M/#00547)	(B=M/#00547)	(C=M/#00547)								
4	1	172151-76161	ELBOW ASSY	1	1	1					
5	2	24315-000180	O-RING, 1BP18.0	1	1	1					
6	1	172187-76190	ELBOW, ADJUST	3	3	3					
6-1	1	172187-76191	ELBOW, ADJUST	3	3	3				N	
	(A=M/#01471)	(B=M/#01471)	(C=M/#01471)								
7	2	24315-000240	O-RING, 1BP24.0	3	3	3					
7-1	2	41851-000240	PACKING, 24.0	3	3	3				N	
	(A=M/#01471)	(B=M/#01471)	(C=M/#01471)								
8	1	172187-76200	ADAPTER, 1/2-3/4	1	1	1					
9	1	172455-76580	ELBOW	1	1	1					
10	2	24315-000180	O-RING, 1BP18.0	1	1	1					
11	1	24315-000140	O-RING, 1BP14.0	1	1	1					
11-1	1	41851-000140	O RING P 14.0 HNBR	1	1	1				N	
	(A=M/#01600)	(B=M/#01600)	(C=M/#01600)								
12	1	24315-000180	O-RING, 1BP18.0	1	1	1					
12-1	1	41851-000180	O RING	1	1	1				N	
	(A=M/#01600)	(B=M/#01600)	(C=M/#01600)								
13	1	24325-000400	O-RING, 1BG40.0	1	1	1					
14	1	24325-000550	O-RING, 1BG55.0	1	1	1					
15	1	26013-100252	BOLT, M10X 25	4	4	4					
16	1	26013-120452	BOLT, M12X 45	4	4	4					
17	1	172499-76470	TUBE ASSY, SUCTION	1	1	1					
18	1	26013-100402	BOLT, M10X 40	2	2	2					
19	1	172499-78090	GUARD, HOSE	1	1	1					
20	1	172455-78100	HOSE	1	1	1					
21	1	172499-78100	HOSE	1	1	1					
22	1	172455-78110	HOSE	1	1	1					
23	1	172499-78130	HOSE	2	2	2					
24	1	172499-78150	HOSE	1	1	1					
25	1	23001-054000	CLAMP, HOSE 54	4	4	4					
26	1	23001-090000	CLAMP, HOSE 90	8	8	8					
27	1	22117-100000	WASHER, 10	4	4	4					
28	1	172460-76570	PLUG	1	1	1					
28-1	1	172499-76160	PLUG G1/4	1	1	1				S	
	(A=M/#00547)	(B=M/#00547)	(C=M/#00547)								
29	1	24315-000110	O-RING, 1BP11.0	1	1	1				W	
	(A=M/#00547)	(B=M/#00547)	(C=M/#00547)								
29-1	1	41851-000110	O-RING	1	1	1				N	
	(A=M/#01600)	(B=M/#01600)	(C=M/#01600)								

N:Old $\xleftarrow[\text{No}]{\text{Yes}}$ New, Q:Old $\xleftarrow[\text{Yes}]{\text{No}}$ New, R:Old $\xleftrightarrow[\text{Yes}]{\text{Yes}}$ New, S:Old $\xleftrightarrow[\text{No}]{\text{No}}$ New, W:Add, Z:Discontinued, F:Interchangeable by set, K:Q'ty Change

Copyright (C) YANMAR CO., LTD. All RightsReserved.

Fig.72. HYD.OIL PIPING(CONTROL VALVE - TURING MOTOR, BOOM)

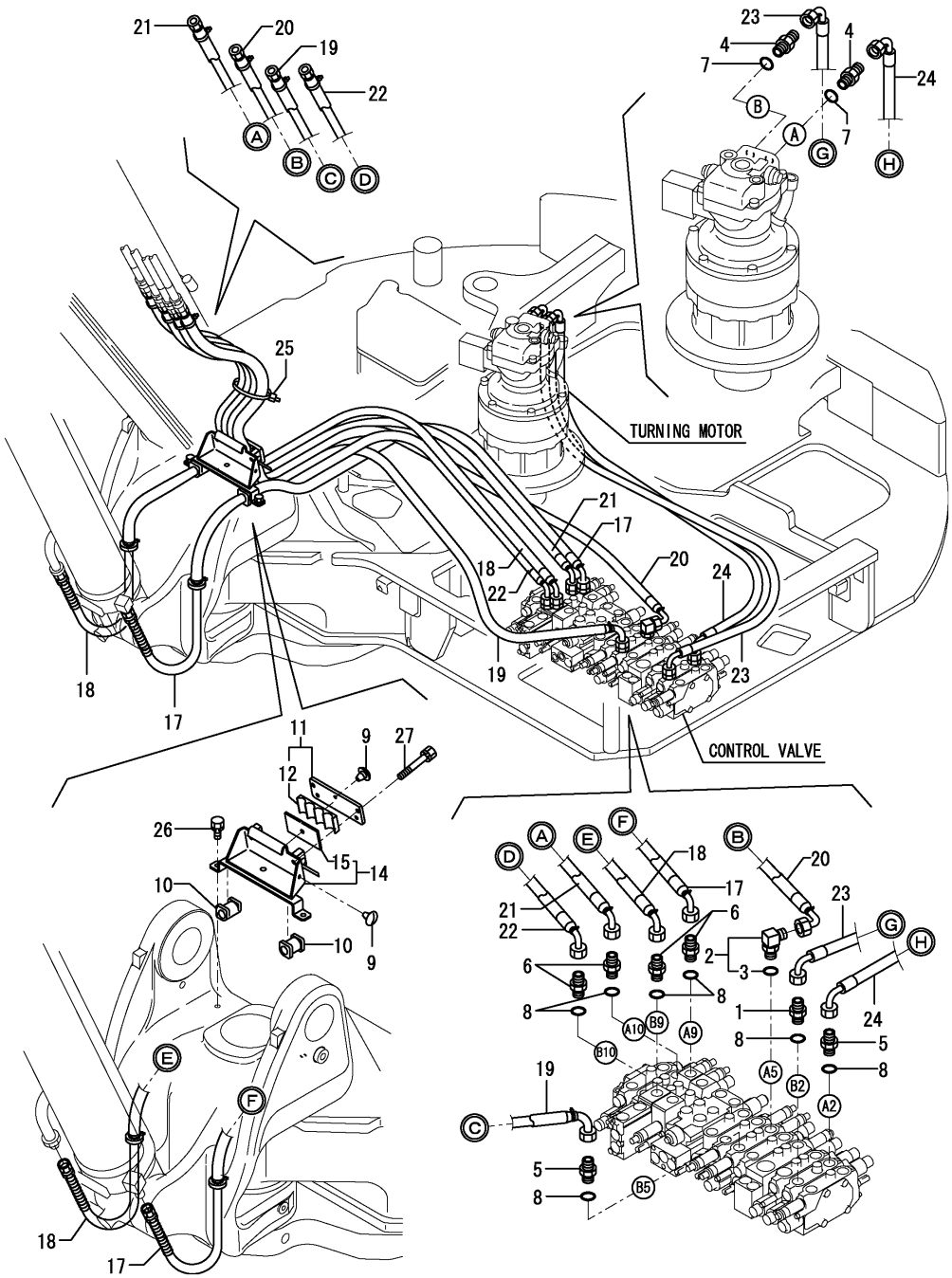

(A)=SV100(US) (D)=
(B)=SV100(AS) (E)=
(C)=SV100(NZ) (F)=

No.	Lev.	Parts No.	Description	Q'ty (A)	(B)	(C)	(D)	(E)	(F)	I	R
1	1	172147-76271	CONNECTOR, 1/2X1/2	1	1	1					
2	1	172141-76900	CONNECTOR ASSY	1	1	1					
3	2	24315-000180	O-RING, 1BP18.0	1	1	1					
4	1	172112-77361	CONNECTOR	2	2	2					
5	1	172112-77361	CONNECTOR	2	2	2					
6	1	172112-77361	CONNECTOR	4	4	4					
7	1	24315-000180	O-RING, 1BP18.0	2	2	2					
7-1	1	41851-000180	O RING	2	2	2				N	
	(A=M/#01600)	(B=M/#01600)	(C=M/#01600)								
8	1	24315-000180	O-RING, 1BP18.0	7	7	7					
8-1	1	41851-000180	O RING	7	7	7				N	
	(A=M/#01600)	(B=M/#01600)	(C=M/#01600)								
9	1	172444-17660	CLIP, TREE	2	2	2					
10	1	172499-78010	RUBBER, HOSE CLAMP	2	2	2					
11	1	172499-78020	PLATE ASSY(YELLOW:87	1	1	1					
11-1	1	172499-78020-1	PLATE ASSY(YELLOW:2J	1	1	1				S	
	(A=M/#01231)	(B=M/#01231)	(C=M/#01231)								
12	2	172499-78030	RUBBER, HOSE SUPPORT	1	1	1					
14	1	172499-78050	CLAMP, HOSE	1	1	1					
14-1	1	172499-78050-1	CLAMP, HOSE	1	1	1				S	
	(A=M/#01231)	(B=M/#01231)	(C=M/#01231)								
15	2	172499-78060	RUBBER, HOSE SUPPORT	1	1	1					
17	1	172499-78240	HOSE	1	1	1					
18	1	172499-78250	HOSE	1	1	1					
19	1	172499-78260	HOSE	1	1	1					
20	1	172499-78270	HOSE	1	1	1					
21	1	172499-78280	HOSE	1	1	1					
22	1	172499-78290	HOSE	1	1	1					
23	1	172499-78300	HOSE	1	1	1					
24	1	172499-78310	HOSE	1	1	1					
25	1	172122-79930	CLAMP, HOSE	1	1	1					
26	1	26013-100202	BOLT, M10X 20	2	2	2					
27	1	26013-100602	BOLT, M10X 60	2	2	2					

N:Old $\xleftarrow[\text{No}]{\text{Yes}}$ New, Q:Old $\xleftarrow[\text{Yes}]{\text{No}}$ New, R:Old $\xleftarrow[\text{Yes}]{\text{Yes}}$ New, S:Old $\xleftarrow[\text{No}]{\text{No}}$ New, W:Add, Z:Discontinued, F:Interchangeable by set, K:Q'ty Change

Copyright (C) YANMAR CO., LTD. All RightsReserved.

Fig.73. HYD.OIL PIPING(SOLENOID V., C/V. - SWIVEL JOINT, SWING CYLINDER)

(A)=SV100(US) (D)=
(B)=SV100(AS) (E)=
(C)=SV100(NZ) (F)=

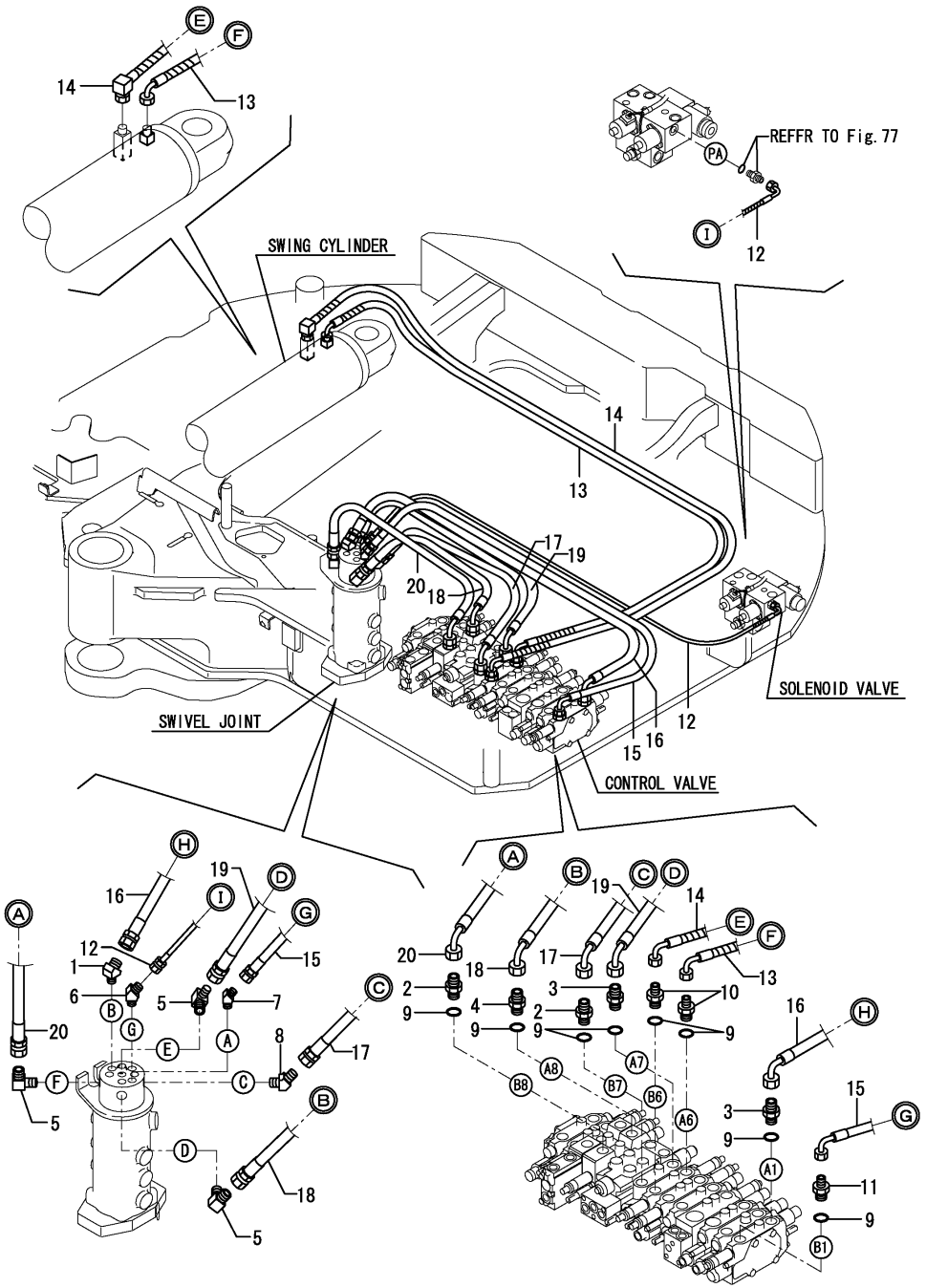

No.	Lev.	Parts No.	Description	Q'ty (A)	(B)	(C)	(D)	(E)	(F)	I	R
1	1	172312-76020	ELBOW	1	1	1					
2	1	172147-76271	CONNECTOR, 1/2X1/2	2	2	2					
3	1	172112-77361	CONNECTOR	2	2	2					
4	1	172112-77361	CONNECTOR	1	1	1					
5	1	23393-040000	JOINT, 90RGI-1/2	3	3	3					
6	1	23394-020000	JOINT, 45RGI-1/4	1	1	1					
7	1	23394-030000	JOINT, 45RGI-3/8	1	1	1					
8	1	23394-040000	JOINT, 45RGI-1/2	1	1	1					
9	1	24315-000180	O-RING, 1BP18.0	8	8	8					
9-1	1	41851-000180	O RING	8	8	8				N	
	(A=M/#01600)	(B=M/#01600)	(C=M/#01600)								
10	1	933160-01370	CONNECTOR,PF1/2PF3/8	2	2	2					
11	1	933160-01370	CONNECTOR,PF1/2PF3/8	1	1	1					
12	1	172467-78230	HOSE	1	1	1					
13	1	172499-78320	HOSE	1	1	1					
14	1	172499-78330	HOSE	1	1	1					
15	1	172499-78410	HOSE	1	1	1					
16	1	172499-78420	HOSE	1	1	1					
17	1	172499-78430	HOSE	1	1	1					
18	1	172499-78440	HOSE	1	1	1					
19	1	172499-78450	HOSE	1	1	1					
20	1	172499-78460	HOSE	1	1	1					

N:Old ←Yes/No→ New, Q:Old ←No/Yes→ New, R:Old ←Yes/Yes→ New, S:Old ←No/No→ New, W:Add, Z:Discontinued, F:Interchangeable by set, K:Q'ty Change

Copyright (C) YANMAR CO., LTD. All RightsReserved.

Fig.74. HYD.OIL PIPING(RETURN 1)

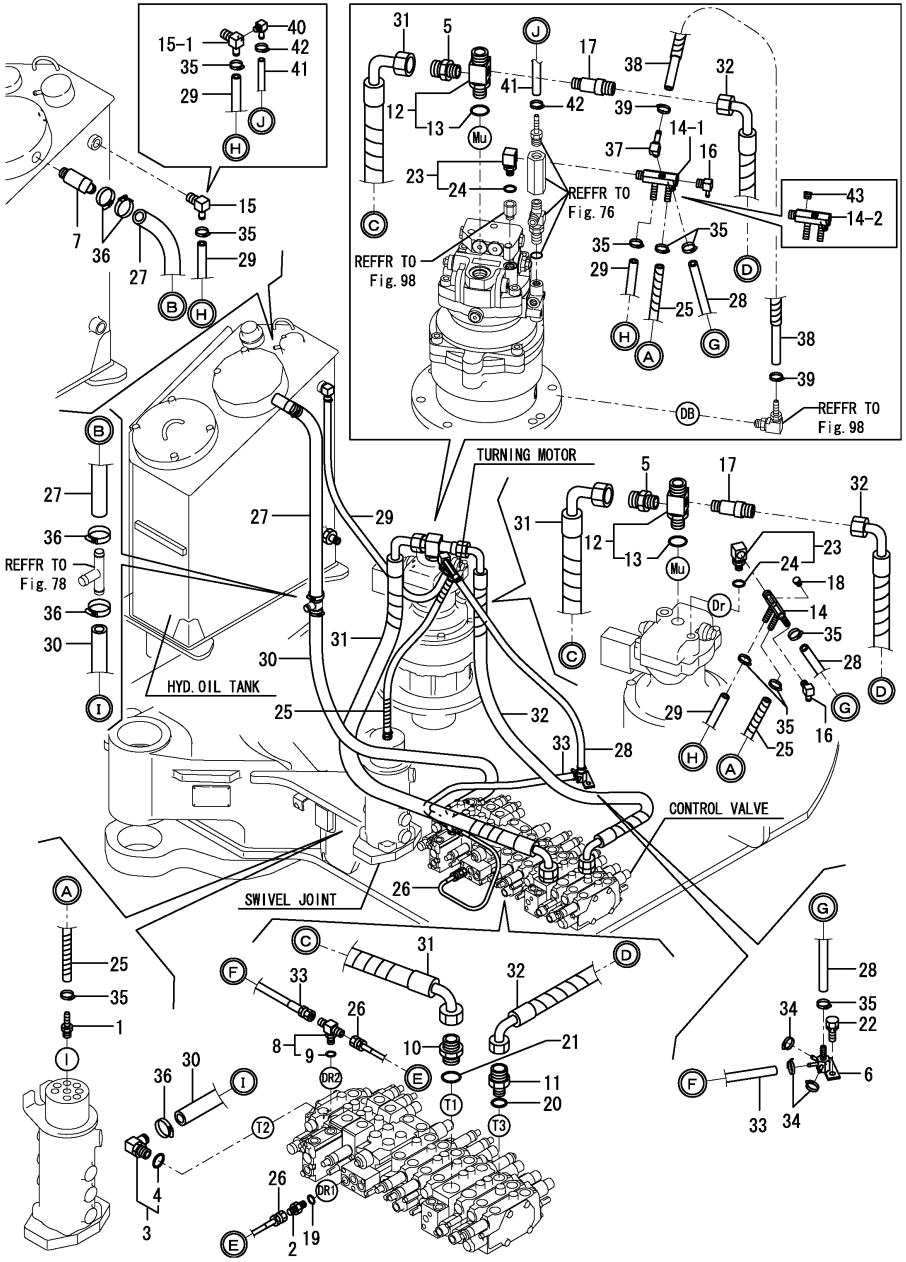

Remarks
(1)Interchangeable by simultaneous replacement with Ref.No.43.

(A)=SV100(US) (D)=
(B)=SV100(AS) (E)=
(C)=SV100(NZ) (F)=

No.	Lev.	Parts No.	Description	Q'ty (A)	(B)	(C)	(D)	(E)	(F)	I	R
1	1	172137-76110	NIPPLE	1	1	1					
2	1	172123-76121	ADAPTER	1	1	1					
3	1	172164-76131	ELBOW	1	1	1					
4	2	24315-000180	O-RING, 1BP18.0	1	1	1					
5	1	172187-76131	CONNECTOR, PF3/4	1	1	1					
6	1	172187-76160	JOINT	1	1	1					
7	1	172455-76160	ELBOW	1	1	1					
8	1	172187-76170	TEE, ADJUSTABLE	1	1	1					
9	2	24315-000110	O-RING, 1BP11.0	1	1	1					
10	1	172499-76170	JOINT	1	1	1					
11	1	172187-76200	ADAPTER, 1/2-3/4	1	1	1					
12	1	172499-76210	JOINT, G1-3/4	1	1	1					
13	2	24315-000240	O-RING, 1BP24.0	1	1	1					
14	1	172187-76350	CONNECTOR	1	1	1					
14-1	1	172499-76310	JOINT	1	1	1				N	
	(A=M/#01170)	(B=M/#01170)	(C=M/#01170)								
14-2	1	172499-76311	JOINT	1	1	1				F	1
	(A=MZZZZZ)	(B=MZZZZZ)	(C=MZZZZZ)								
15	1	172168-76370	ELBOW	1	1	1					
15-1	1	172499-76330	ELBOW, NIPPLE	1	1	1				S	
	(A=M/#01188)	(B=M/#01188)	(C=M/#01188)								
15-2	1	172499-76331	NIPPLE, ELBOW	1	1	1				N	
	(A=M/#01290)	(B=M/#01290)	(C=M/#01290)								
16	1	172186-76390	NIPPLE, ELBOW	1	1	1					
17	1	172175-76660	JOINT, 1/2-3/4	1	1	1					
18	1	23871-020000	PLUG, R02	1	1	1				Z	
	(A=M/#01170)	(B=M/#01170)	(C=M/#01170)								
19	1	24315-000110	O-RING, 1BP11.0	1	1	1					
19-1	1	41851-000110	O-RING	1	1	1				N	
	(A=M/#01600)	(B=M/#01600)	(C=M/#01600)								
20	1	24315-000180	O-RING, 1BP18.0	1	1	1					
20-1	1	41851-000180	O RING	1	1	1				N	
	(A=M/#01600)	(B=M/#01600)	(C=M/#01600)								
21	1	24315-000290	O-RING, 1BP29.0	1	1	1					
22	1	26013-100202	BOLT, M10X 20	2	2	2					
23	1	933111-50001	CONNECTOR	1	1	1					
24	2	24315-000140	O-RING, 1BP14.0	1	1	1					
25	1	172448-78310	HOSE	1	1	1					
26	1	172499-78340	HOSE	1	1	1					
27	1	172164-78350	HOSE	1	1	1					
28	1	172455-78350	HOSE	1	1	1					
29	1	172455-78370	HOSE	1	1	1					
30	1	172496-78450	HOSE	1	1	1					
31	1	172499-78610	HOSE	1	1	1					
32	1	172499-78620	HOSE	1	1	1					
33	1	172480-79210	HOSE	1	1	1					
34	1	23000-013000	CLAMP, 13	3	3	3					
35	1	23001-016000	CLAMP, HOSE 16	6	6	6					
36	1	23001-025000	CLAMP, HOSE 25	5	5	5					
37	1	172155-11120	ELBOW	1	1	1				W	
	(A=M/#01170)	(B=M/#01170)	(C=M/#01170)								

N:Old $\xleftarrow[\text{No}]{\text{Yes}}$ New, Q:Old $\xleftarrow[\text{Yes}]{\text{No}}$ New, R:Old $\xleftarrow[\text{Yes}]{\text{Yes}}$ New, S:Old $\xleftarrow[\text{No}]{\text{No}}$ New, W:Add, Z:Discontinued, F:Interchangeable by set, K:Q'ty Change

++ CONTINUE ++

Copyright (C) YANMAR CO., LTD. All RightsReserved.

Fig.74. HYD.OIL PIPING(RETURN 1)

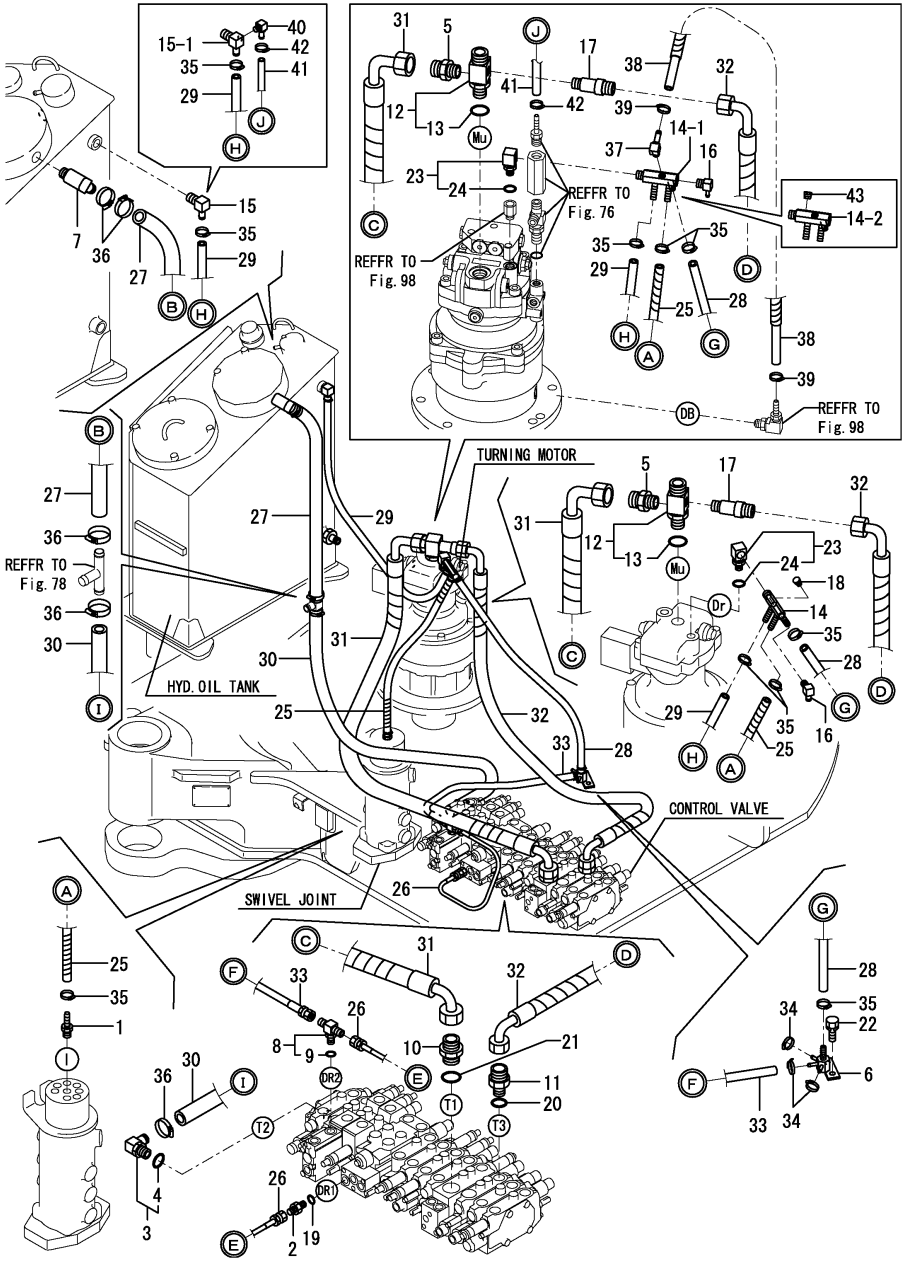

Remarks
(1)Interchangeable by simultaneous replacement with Ref.No.43.

(A)=SV100(US) (D)=
(B)=SV100(AS) (E)=
(C)=SV100(NZ) (F)=

No.	Lev.	Parts No.	Description	Q'ty (A)	(B)	(C)	(D)	(E)	(F)	I	R
38	1	172487-78250	HOSE	1	1	1				W	
	(A=M/#01170)	(B=M/#01170)	(C=M/#01170)								
39	1	23001-016000	CLAMP, HOSE 16	2	2	2				W	
	(A=M/#01170)	(B=M/#01170)	(C=M/#01170)								
40	1	172186-76390	NIPPLE, ELBOW	1	1	1				W	
	(A=M/#01188)	(B=M/#01188)	(C=M/#01188)								
41	1	172499-78600	HOSE	1	1	1				W	
	(A=M/#01188)	(B=M/#01188)	(C=M/#01188)								
42	1	23000-013000	CLAMP, 13	2	2	2				W	
	(A=M/#01188)	(B=M/#01188)	(C=M/#01188)								
43	1	23871-020000	PLUG, R02	1	1	1				W	
	(A=MZZZZZ)	(B=MZZZZZ)	(C=MZZZZZ)								

N:Old $\xleftarrow[\text{No}]{\text{Yes}}$ New, Q:Old $\xleftarrow[\text{Yes}]{\text{No}}$ New, R:Old $\xleftarrow[\text{Yes}]{\text{Yes}}$ New, S:Old $\xleftarrow[\text{No}]{\text{No}}$ New, W:Add, Z:Discontinued, F:Interchangeable by set, K:Q'ty Change

Copyright (C) YANMAR CO., LTD. All RightsReserved.

Fig.75. HYD OIL PIPING(RETURN 2)

(A)=SV100(US) (D)=
(B)=SV100(AS) (E)=
(C)=SV100(NZ) (F)=

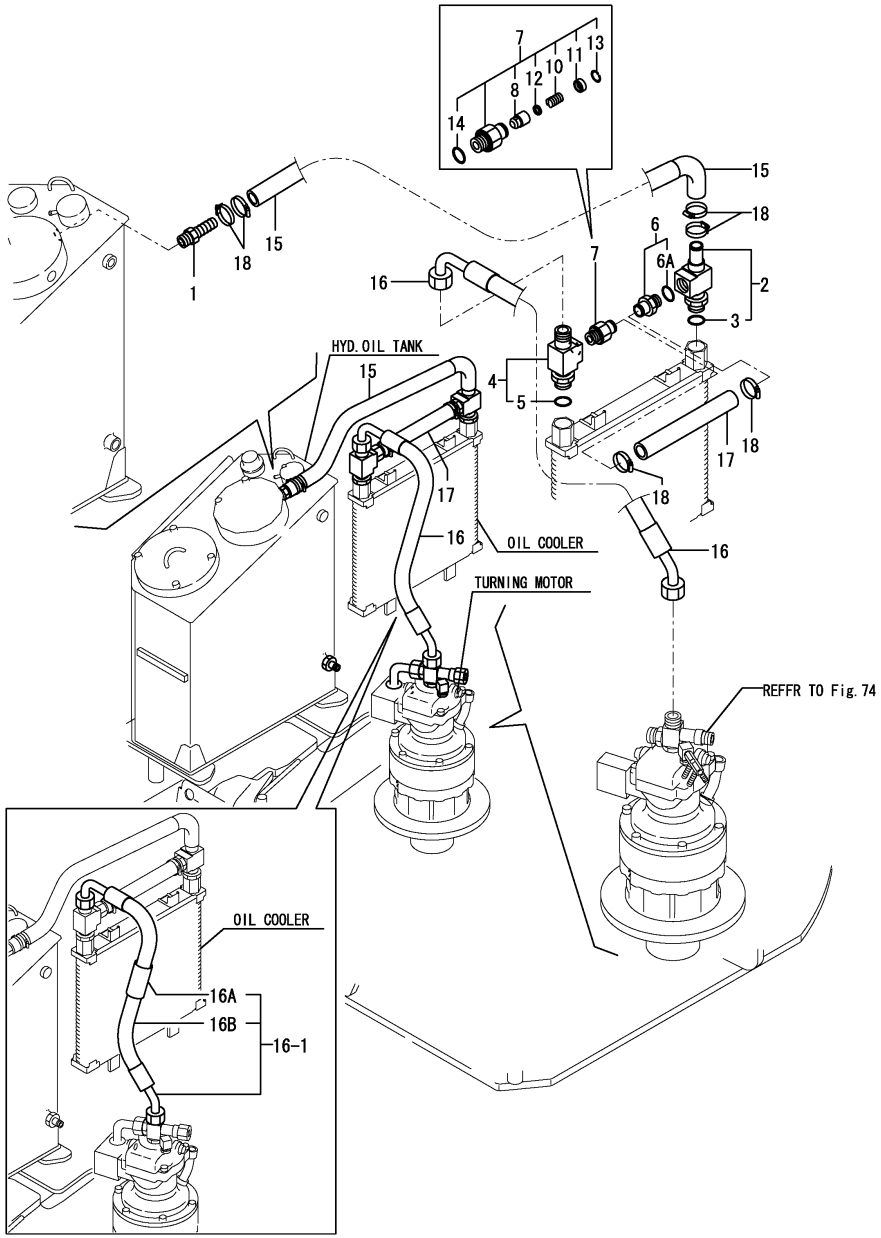

No.	Lev.	Parts No.	Description	Q'ty (A)	(B)	(C)	(D)	(E)	(F)	I	R
1	1	172187-76180	NIPPLE, HOSE	1	1	1					
2	1	172499-76180	JOINT, G1-1-3/4	1	1	1					
3	2	24315-000290	O-RING, 1BP29.0	1	1	1					
4	1	172499-76190	JOINT, G1-3/4	1	1	1					
5	2	24315-000290	O-RING, 1BP29.0	1	1	1					
6	1	172527-76210	NIPPLE, 1-25	1	1	1					
6A	2	24315-000290	O-RING, 1BP29.0	1	1	1				W	
	(A=M/#01369)	(B=M/#01369)	(C=M/#01369)								
7	1	172499-76250	VALVE ASSY	1	1	1					
8	2	172649-74470	POPPET VALVE	1	1	1					
10	2	172499-76270	SPRING, VALVE	1	1	1					
11	2	172499-76280	BASE,SPRING	1	1	1					
12	2	172499-76290	SPACER	1	1	1					
13	2	22252-000220	RING, 22	1	1	1					
14	2	24316-000240	O-RING, 4DP24.0	1	1	1					
15	1	172499-78110	HOSE	1	1	1					
16	1	172499-78630	HOSE	1	1	1					1
16-1	1	172499-78580	HOSE ASSY,G616CE	1	1	1				N	1
	(A=M/#01122)	(B=M/#01122)	(C=M/#01122)								
16-2	1	172499-78581	HOSE ASSY,G616CE	1	1	1				S	1
	(A=M/#01188)	(B=M/#01188)	(C=M/#01188)								
16A	2	172499-78590	INSURATOR,HOSE	1	1	1				W	
	(A=M/#01122)	(B=M/#01122)	(C=M/#01122)								
16A-1	2	172499-78591	INSURATOR,HOSE	1	1	1				N	
	(A=M/#01188)	(B=M/#01188)	(C=M/#01188)								
16B	2	172499-78630	HOSE	1	1	1				W	
	(A=M/#01122)	(B=M/#01122)	(C=M/#01122)								
16B-1	2	172499-78631	HOSE,G616CE091	1	1	1				S	
	(A=M/#01188)	(B=M/#01188)	(C=M/#01188)								
17	1	172499-78680	HOSE	1	1	1					
18	1	23001-041000	CLAMP, HOSE 41	6	6	6					

Remarks
(1)HOSE LENGTH:REF.NO.16,16-1 830MM,
REF.NO.16-2 910MM.

N:Old $\overset{\text{Yes}}{\underset{\text{No}}{\leftrightarrows}}$ New, Q:Old $\overset{\text{No}}{\underset{\text{Yes}}{\leftrightarrows}}$ New, R:Old $\overset{\text{Yes}}{\underset{\text{Yes}}{\leftrightarrows}}$ New, S:Old $\overset{\text{No}}{\underset{\text{No}}{\leftrightarrows}}$ New, W:Add, Z:Discontinued, F:Interchangeable by set, K:Q'ty Change

Copyright (C) YANMAR CO., LTD. All RightsReserved.

Fig.76. HYD.OIL PIPING(RETURN 3)

(A)=SV100(US) (D)=
(B)=SV100(AS) (E)=
(C)=SV100(NZ) (F)=

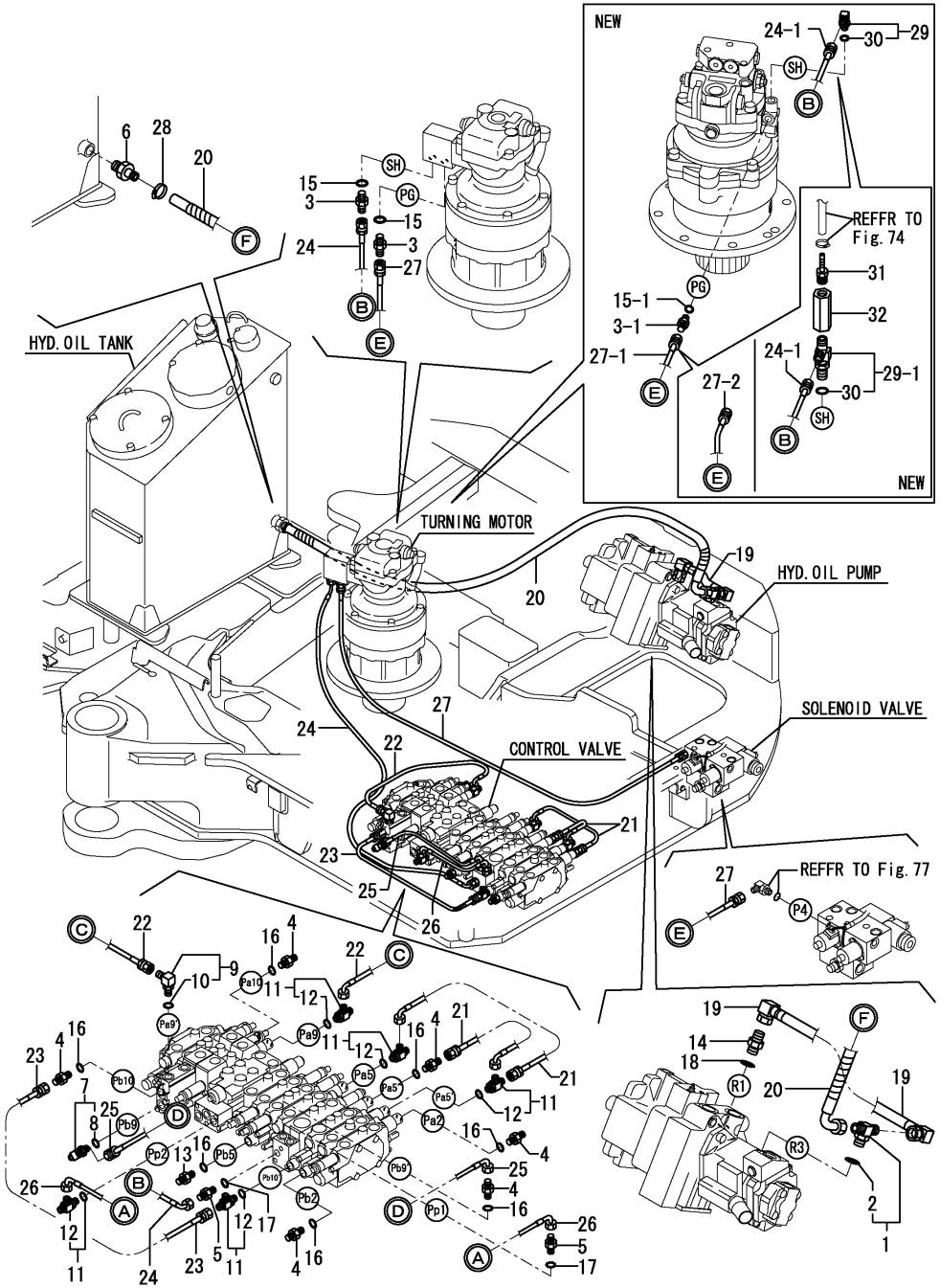

No.	Lev.	Parts No.	Description	Q'ty (A)	(B)	(C)	(D)	(E)	(F)	I	R
1	1	172422-76110	JOINT ASSY, PF1/2	1	1	1					
2	2	24315-000180	O-RING, 1BP18.0	1	1	1					
3	1	172123-76121	ADAPTER	2	2	2					
3-1	1	172123-76121	ADAPTER	1	1	1				K	
	(A=M/#01170)	(B=M/#01170)	(C=M/#01170)								
4	1	172123-76121	ADAPTER	6	6	6					
5	1	172123-76121	ADAPTER	2	2	2					
6	1	172168-76170	CONNECTOR	1	1	1					
7	1	172187-76170	TEE, ADJUSTABLE	1	1	1					
8	2	24315-000110	O-RING, 1BP11.0	1	1	1					
9	1	172141-76180	CONNECTOR ASSY	1	1	1					
9-1	1	172141-76181	CONNECTOR ASSY, 02FF	1	1	1				N	
	(A=M/#01471)	(B=M/#01471)	(C=M/#01471)								
10	2	24315-000110	O-RING, 1BP11.0	1	1	1					
10-1	2	41851-000110	O-RING	1	1	1				N	
	(A=M/#01471)	(B=M/#01471)	(C=M/#01471)								
11	1	172162-76180	JOINT ASSY, 3-1/4	5	5	5					
11-1	1	172162-76181	JOINT ASSY	5	5	5				N	
	(A=M/#01471)	(B=M/#01471)	(C=M/#01471)								
12	2	24315-000110	O-RING, 1BP11.0	5	5	5					
12-1	2	41851-000110	O-RING	5	5	5				N	
	(A=M/#01471)	(B=M/#01471)	(C=M/#01471)								
13	1	172164-76330	JOINT, PF1/4-0.7	1	1	1					
14	1	172112-77361	CONNECTOR	1	1	1					
15	1	24315-000110	O-RING, 1BP11.0	2	2	2					
15-1	1	24315-000110	O-RING, 1BP11.0	1	1	1				K	
	(A=M/#01170)	(B=M/#01170)	(C=M/#01170)								
15-2	1	41851-000110	O-RING	1	1	1				N	
	(A=M/#01600)	(B=M/#01600)	(C=M/#01600)								
16	1	24315-000110	O-RING, 1BP11.0	7	7	7					
16-1	1	41851-000110	O-RING	7	7	7				N	
	(A=M/#01600)	(B=M/#01600)	(C=M/#01600)								
17	1	24315-000110	O-RING, 1BP11.0	2	2	2					
17-1	1	41851-000110	O-RING	2	2	2				N	
	(A=M/#01600)	(B=M/#01600)	(C=M/#01600)								
18	1	24315-000180	O-RING, 1BP18.0	1	1	1					
18-1	1	41851-000180	O RING	1	1	1				N	
	(A=M/#01600)	(B=M/#01600)	(C=M/#01600)								
19	1	172499-78170	HOSE	1	1	1					
20	1	172499-78180	HOSE	1	1	1					
21	1	172491-78260	HOSE	2	2	2					
22	1	172458-78310	HOSE	1	1	1					
23	1	172480-78780	HOSE	1	1	1					
24	1	172499-78900	HOSE	1	1	1					
24-1	1	172455-78710	HOSE	1	1	1				S	
	(A=M/#01170)	(B=M/#01170)	(C=M/#01170)								
25	1	172499-78910	HOSE	1	1	1					
26	1	172499-78920	HOSE	1	1	1					
27	1	172444-79110	HOSE	1	1	1					
27-1	1	172422-78960	HOSE	1	1	1				S	
	(A=M/#01170)	(B=M/#01170)	(C=M/#01170)								

N:Old $\frac{\text{Yes}}{\text{No}}$ New, Q:Old $\frac{\text{No}}{\text{Yes}}$ New, R:Old $\frac{\text{Yes}}{\text{Yes}}$ New, S:Old $\frac{\text{No}}{\text{No}}$ New, W:Add, Z:Discontinued, F:Interchangeable by set, K:Q'ty Change

++ CONTINUE ++

Copyright (C) YANMAR CO., LTD. All RightsReserved.

Fig.76. HYD.OIL PIPING(RETURN 3)

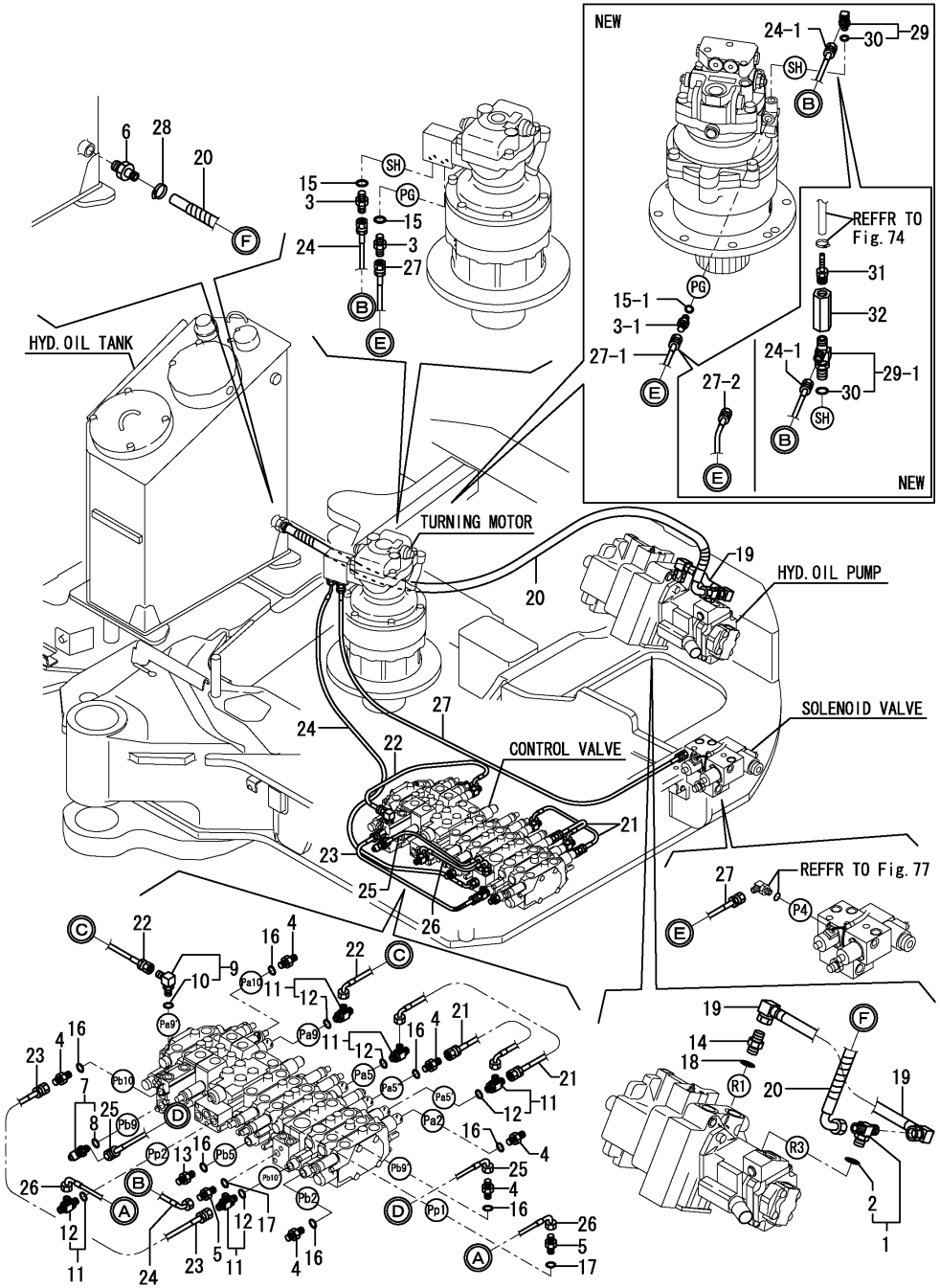

(A)=SV100(US) (D)=
(B)=SV100(AS) (E)=
(C)=SV100(NZ) (F)=

No.	Lev.	Parts No.	Description	Q'ty (A)	(B)	(C)	(D)	(E)	(F)	I	R
27-2	1	172499-78960	HOSE,F403BC135S	1	1	1				S	
	(A=M/#01188)	(B=M/#01188)	(C=M/#01188)								
28	1	23001-022000	CLAMP, HOSE 22	1	1	1					
29	1	172141-76180	CONNECTOR ASSY	1	1	1				W	
	(A=M/#01170)	(B=M/#01170)	(C=M/#01170)								
29-1	1	172499-76320	JOINT ASSY	1	1	1				S	
	(A=M/#01188)	(B=M/#01188)	(C=M/#01188)								
30	2	24315-000110	O-RING, 1BP11.0	1	1	1					
31	1	172141-76220	NIPPLE	1	1	1				W	
	(A=M/#01188)	(B=M/#01188)	(C=M/#01188)								
32	1	172499-76350	CHECK VALVE R1/4	1	1	1				W	
	(A=M/#01188)	(B=M/#01188)	(C=M/#01188)								
32-1	1	172499-76351	CHECK VALVE R1/4	1	1	1				N	
	(A=M/#01170)	(B=M/#01170)	(C=M/#01170)								

N:Old $\frac{\text{Yes}}{\text{No}}$ New, Q:Old $\frac{\text{No}}{\text{Yes}}$ New, R:Old $\frac{\text{Yes}}{\text{Yes}}$ New, S:Old $\frac{\text{No}}{\text{No}}$ New, W:Add, Z:Discontinued, F:Interchangeable by set, K:Q'ty Change

Copyright (C) YANMAR CO., LTD. All RightsReserved.

Fig.77. HYD.OIL PIPING(PUMP - SOLENOID VALVE - RETURN)

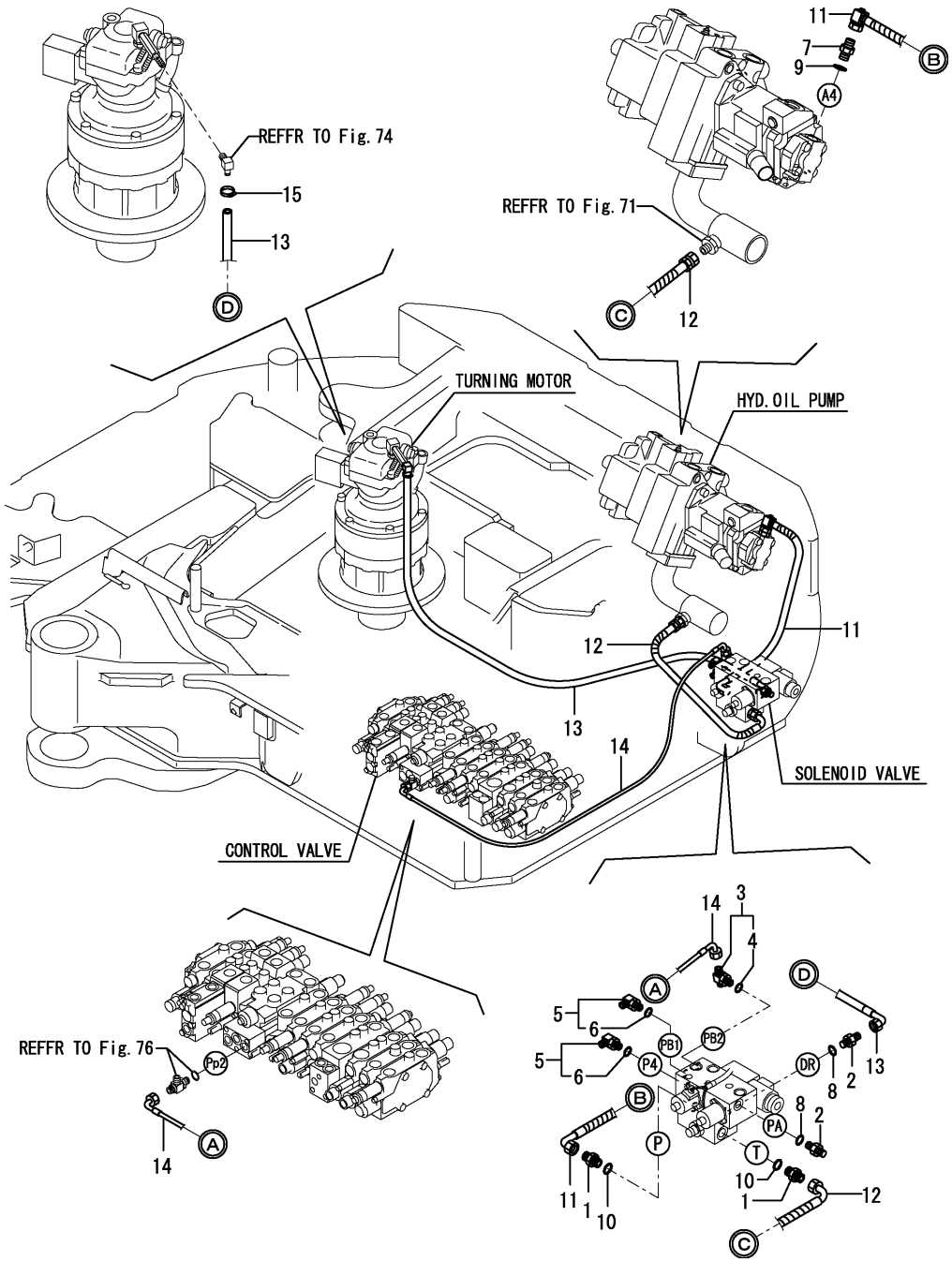

(A)=SV100(US) (D)=
(B)=SV100(AS) (E)=
(C)=SV100(NZ) (F)=

No.	Lev.	Parts No.	Description	Q'ty (A)	(B)	(C)	(D)	(E)	(F)	I	R
1	1	172730-75141	ADAPTER	2	2	2					
2	1	172123-76121	ADAPTER	2	2	2					
3	1	172187-76170	TEE, ADJUSTABLE	1	1	1					
4	2	24315-000110	O-RING, 1BP11.0	1	1	1					
5	1	172141-76180	CONNECTOR ASSY	2	2	2					
5-1	1	172141-76181	CONNECTOR ASSY, 02FF	2	2	2				N	
	(A=M/#01471)	(B=M/#01471)	(C=M/#01471)								
6	2	24315-000110	O-RING, 1BP11.0	2	2	2					
6-1	2	41851-000110	O-RING	2	2	2				N	
	(A=M/#01471)	(B=M/#01471)	(C=M/#01471)								
7	1	172116-76381	ADAPTER, 64	1	1	1					
8	1	24315-000110	O-RING, 1BP11.0	2	2	2					
8-1	1	41851-000110	O-RING	2	2	2				N	
	(A=M/#01600)	(B=M/#01600)	(C=M/#01600)								
9	1	24315-000140	O-RING, 1BP14.0	1	1	1					
9-1	1	41851-000140	O RING P 14.0 HNBR	1	1	1				N	
	(A=M/#01600)	(B=M/#01600)	(C=M/#01600)								
10	1	24315-000140	O-RING, 1BP14.0	2	2	2					
10-1	1	41851-000140	O RING P 14.0 HNBR	2	2	2				N	
	(A=M/#01600)	(B=M/#01600)	(C=M/#01600)								
11	1	172499-78160	HOSE	1	1	1					
12	1	172499-78350	HOSE	1	1	1					
13	1	172499-78360	HOSE	1	1	1					
14	1	172499-78890	HOSE	1	1	1					
15	1	23000-013000	CLAMP, 13	1	1	1					

N:Old $\frac{\text{Yes}}{\text{No}}$ New, Q:Old $\frac{\text{No}}{\text{Yes}}$ New, R:Old $\frac{\text{Yes}}{\text{Yes}}$ New, S:Old $\frac{\text{No}}{\text{No}}$ New, W:Add, Z:Discontinued, F:Interchangeable by set, K:Q'ty Change

Copyright (C) YANMAR CO., LTD. All RightsReserved.

Fig.78. HYD.OIL PIPING(P.T.O. : FRAME END)

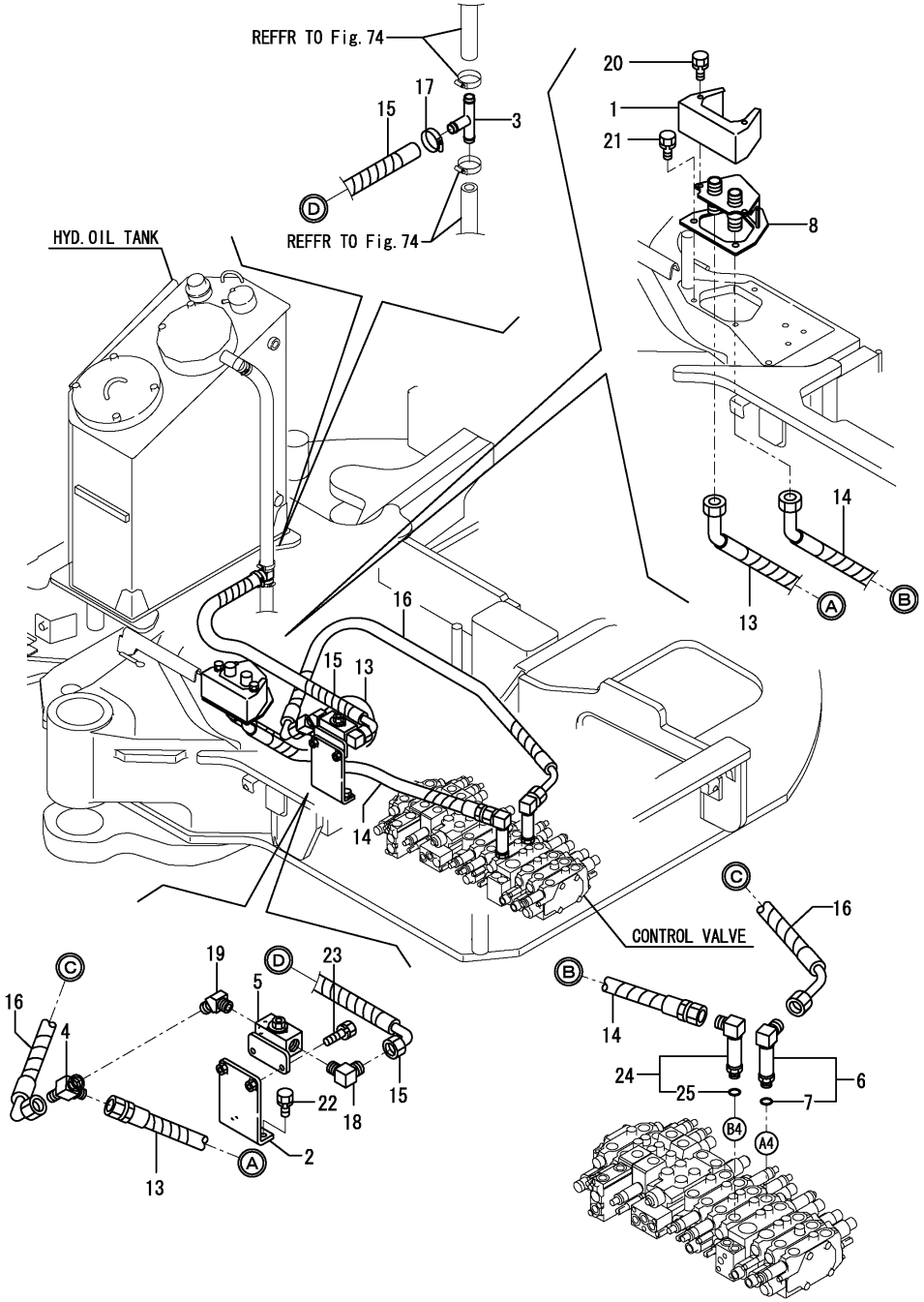

(A)=SV100(US) (D)=
(B)=SV100(AS) (E)=
(C)=SV100(NZ) (F)=

No.	Lev.	Parts No.	Description	Q'ty (A)	(B)	(C)	(D)	(E)	(F)	I	R
1	1	172187-61541-3	COVER, 3RD	1	1	1					
2	1	172463-74700	BRACKET ASSY,PTO	1	1	1					
3	1	172472-76110	JOINT	1	1	1					
4	1	172989-76120	CONNECTOR	1	1	1					
5	1	172176-76580-3	STOP VALVE(GREEN:86)	1	1	1					
5-1	1	172176-76581-4	VALVE, STOP (49)	1	1	1				R	
	(A=M/#00719)	(B=M/#00719)	(C=M/#00719)								
6	1	172455-76580	ELBOW	1	1	1					
7	2	24315-000180	O-RING, 1BP18.0	1	1	1					
8	1	172187-76821-3	CONNECTOR ASSY	1	1	1					
13	1	172478-78700	HOSE	1	1	1					
14	1	172478-78700	HOSE	1	1	1					
15	1	172499-78760	HOSE	1	1	1					
16	1	172478-78850	HOSE	1	1	1					
17	1	23001-035000	CLAMP, HOSE 35	1	1	1					
18	1	23393-060000	JOINT, 90RGI-3/4	1	1	1					
19	1	23394-060000	JOINT, 45RGI-3/4	1	1	1					
20	1	26013-080162	BOLT, M8X 16	2	2	2					
21	1	26013-100202	BOLT, M10X 20	3	3	3					
22	1	26013-100202	BOLT, M10X 20	2	2	2					
23	1	26013-100302	BOLT, M10X 30	2	2	2					
24	1	172455-76580	ELBOW	1	1	1					
24-1	1	172A21-76110	ELBOW	1	1	1				N	
	(A=M/#01726)	(B=M/#01726)	(C=M/#01726)								
25	2	24315-000180	O-RING, 1BP18.0	1	1	1					
25-1	2	41851-000180	O RING	1	1	1				N	
	(A=M/#01726)	(B=M/#01726)	(C=M/#01726)								

N:Old $\xleftarrow[\text{No}]{\text{Yes}}$ New, Q:Old $\xleftarrow[\text{Yes}]{\text{No}}$ New, R:Old $\xleftarrow[\text{Yes}]{\text{Yes}}$ New, S:Old $\xleftarrow[\text{No}]{\text{No}}$ New, W:Add, Z:Discontinued, F:Interchangeable by set, K:Q'ty Change

Copyright (C) YANMAR CO., LTD. All RightsReserved.

Fig.79. HYD.OIL PIPING(TRACK FRAME)

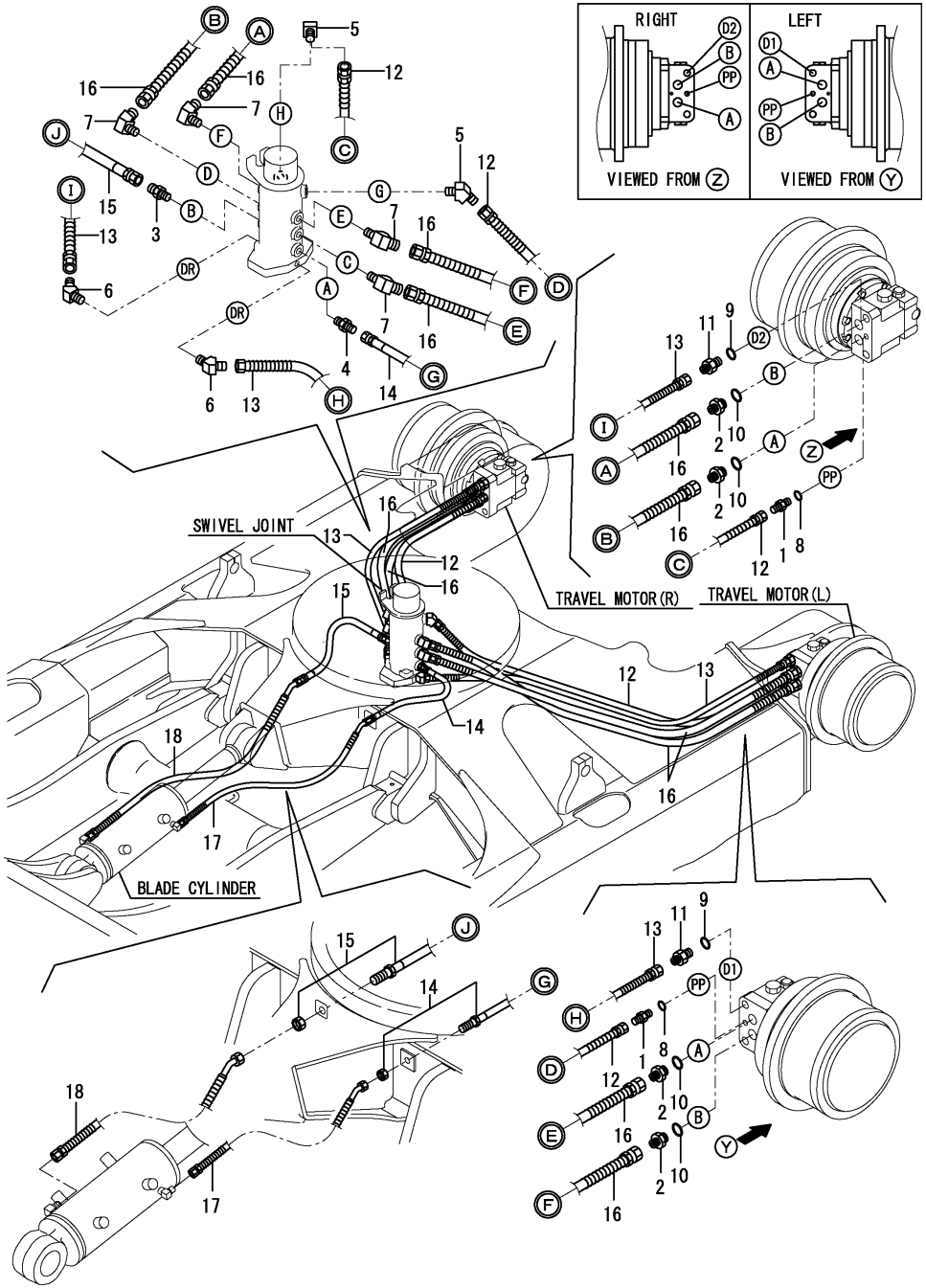

(A)=SV100(US) (D)=
(B)=SV100(AS) (E)=
(C)=SV100(NZ) (F)=

No.	Lev.	Parts No.	Description	Q'ty (A)	(B)	(C)	(D)	(E)	(F)	I	R
1	1	172123-76121	ADAPTER	2	2	2					
2	1	172499-76200	JOINT	4	4	4					
3	1	172141-76940	ADAPTER	1	1	1					
4	1	23391-030000	JOINT, RGI-3/8	1	1	1					
5	1	23394-020000	JOINT, 45RGI-1/4	2	2	2					
6	1	23394-030000	JOINT, 45RGI-3/8	2	2	2					
7	1	23394-040000	JOINT, 45RGI-1/2	4	4	4					
8	1	24315-000110	O-RING, 1BP11.0	2	2	2					
8-1	1	41851-000110	O-RING	2	2	2				N	
	(A=M/#01600)	(B=M/#01600)	(C=M/#01600)								
9	1	24315-000180	O-RING, 1BP18.0	2	2	2					
9-1	1	41851-000180	O RING	2	2	2				N	
	(A=M/#01600)	(B=M/#01600)	(C=M/#01600)								
10	1	24315-000240	O-RING, 1BP24.0	4	4	4					
10-1	1	41851-000240	PACKING, 24.0	4	4	4				N	
	(A=M/#01600)	(B=M/#01600)	(C=M/#01600)								
11	1	933160-01370	CONNECTOR,PF1/2PF3/8	2	2	2					
12	1	172187-78201	HOSE	2	2	2					
13	1	172187-78211	HOSE	2	2	2					
14	1	172499-78510	HOSE	1	1	1					
15	1	172499-78520	HOSE	1	1	1					
16	1	172499-78530	HOSE	4	4	4					
17	1	172499-78540	HOSE	1	1	1					
18	1	172499-78550	HOSE	1	1	1					

N:Old $\xleftarrow[\text{No}]{\text{Yes}}$ New, Q:Old $\xleftarrow[\text{Yes}]{\text{No}}$ New, R:Old $\xleftarrow[\text{Yes}]{\text{Yes}}$ New, S:Old $\xleftarrow[\text{No}]{\text{No}}$ New, W:Add, Z:Discontinued, F:Interchangeable by set, K:Q'ty Change

Copyright (C) YANMAR CO., LTD. All RightsReserved.

Fig.80. HYD.OIL PIPING(BOOM)

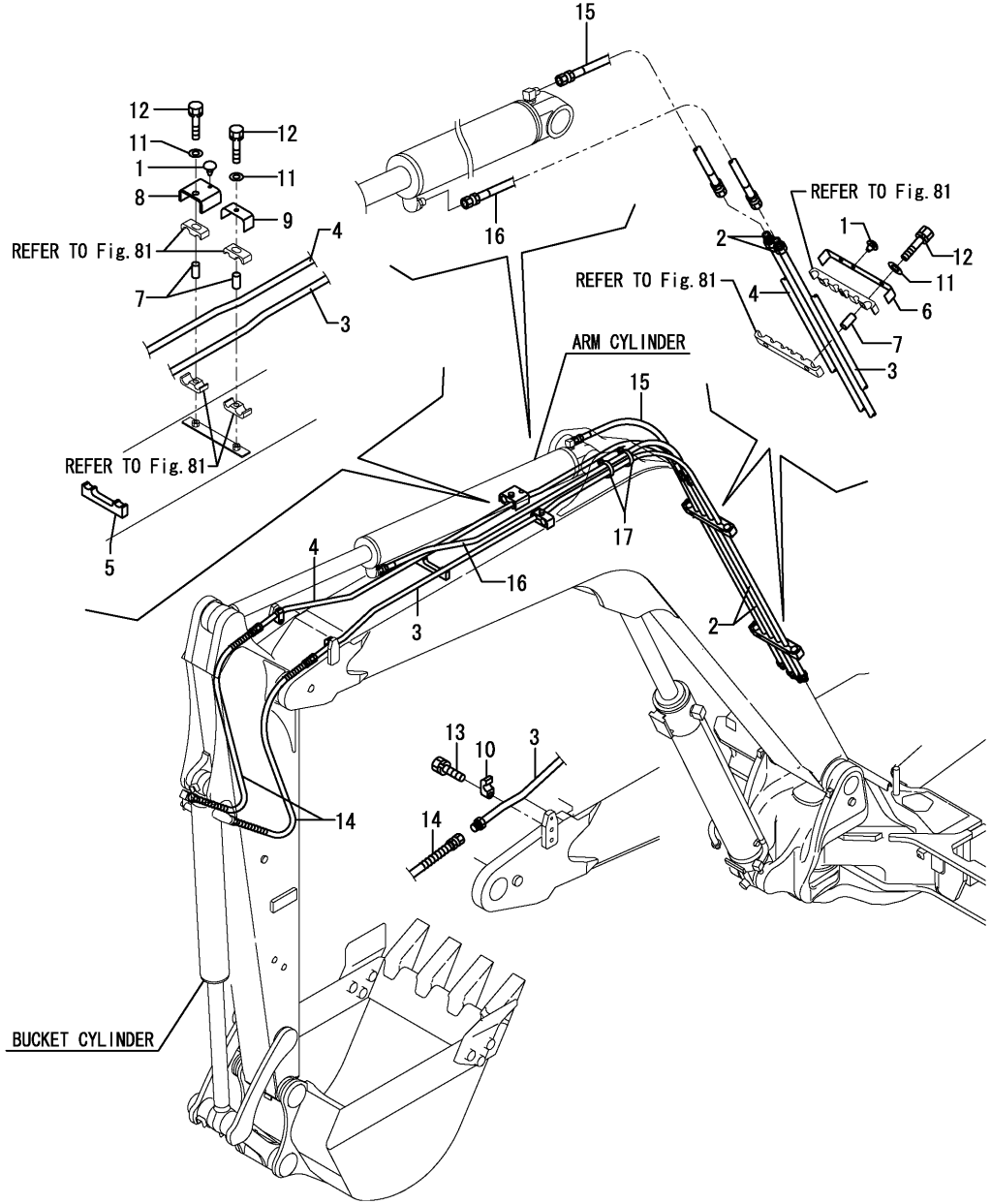

(A)=SV100(US) (D)=
(B)=SV100(AS) (E)=
(C)=SV100(NZ) (F)=

No.	Lev.	Parts No.	Description	Q'ty (A)	(B)	(C)	(D)	(E)	(F)	I	R
1	1	172444-17660	CLIP, TREE	4	4	4					
2	1	172187-76400-1	TUBE, ARM	2	2	2					
2-1	1	172187-76400-2	TUBE, ARM	2	2	2				S	
	(A=M/#01231)	(B=M/#01231)	(C=M/#01231)								
3	1	172187-76420-1	TUBE, BUCKET	1	1	1					
3-1	1	172187-76420-2	TUBE, BUCKET	1	1	1				S	
	(A=M/#01231)	(B=M/#01231)	(C=M/#01231)								
4	1	172187-76440-1	TUBE, BUCKET	1	1	1					
4-1	1	172187-76440-2	TUBE, BUCKET	1	1	1				S	
	(A=M/#01231)	(B=M/#01231)	(C=M/#01231)								
5	1	172478-76500	ANTIVIBRATION RUBBER	1	1	1					
6	1	172478-76511-1	CLAMP	2	2	2					
6-1	1	172478-76511-2	CLAMP	2	2	2				S	
	(A=M/#01231)	(B=M/#01231)	(C=M/#01231)								
7	1	172187-76520	COLLAR, CLAMP	6	6	6					
8	1	172978-76520	CLAMP, TUBE	1	1	1					
8-1	1	172978-76520-2	CLAMP, TUBE	1	1	1				S	
	(A=M/#01231)	(B=M/#01231)	(C=M/#01231)								
9	1	172187-76530-1	CLAMP, TUBE	1	1	1					
9-1	1	172187-76530-2	CLAMP, TUBE	1	1	1				S	
	(A=M/#01231)	(B=M/#01231)	(C=M/#01231)								
10	1	172142-76950	CLAMP	2	2	2					
10-1	1	172142-76950-6	CLAMP	2	2	2				S	
	(A=M/#01231)	(B=M/#01231)	(C=M/#01231)								
11	1	22137-100000	WASHER, 10	6	6	6					
12	1	26013-100502	BOLT, M10X 50	6	6	6					
13	1	26013-120402	BOLT, M12X 40	2	2	2					
14	1	172499-78210	HOSE	2	2	2					
15	1	172499-78220	HOSE	1	1	1					
16	1	172499-78230	HOSE	1	1	1					
17	1	172187-78580	BAND W 397	2	2	2					

N:Old $\xleftarrow[\text{No}]{\text{Yes}}$ New, Q:Old $\xleftarrow[\text{Yes}]{\text{No}}$ New, R:Old $\xleftarrow[\text{Yes}]{\text{Yes}}$ New, S:Old $\xleftarrow[\text{No}]{\text{No}}$ New, W:Add, Z:Discontinued, F:Interchangeable by set, K:Q'ty Change

Copyright (C) YANMAR CO., LTD. All RightsReserved.

Fig.81. HYD.OIL PIPING(P.T.O. : ARM END)

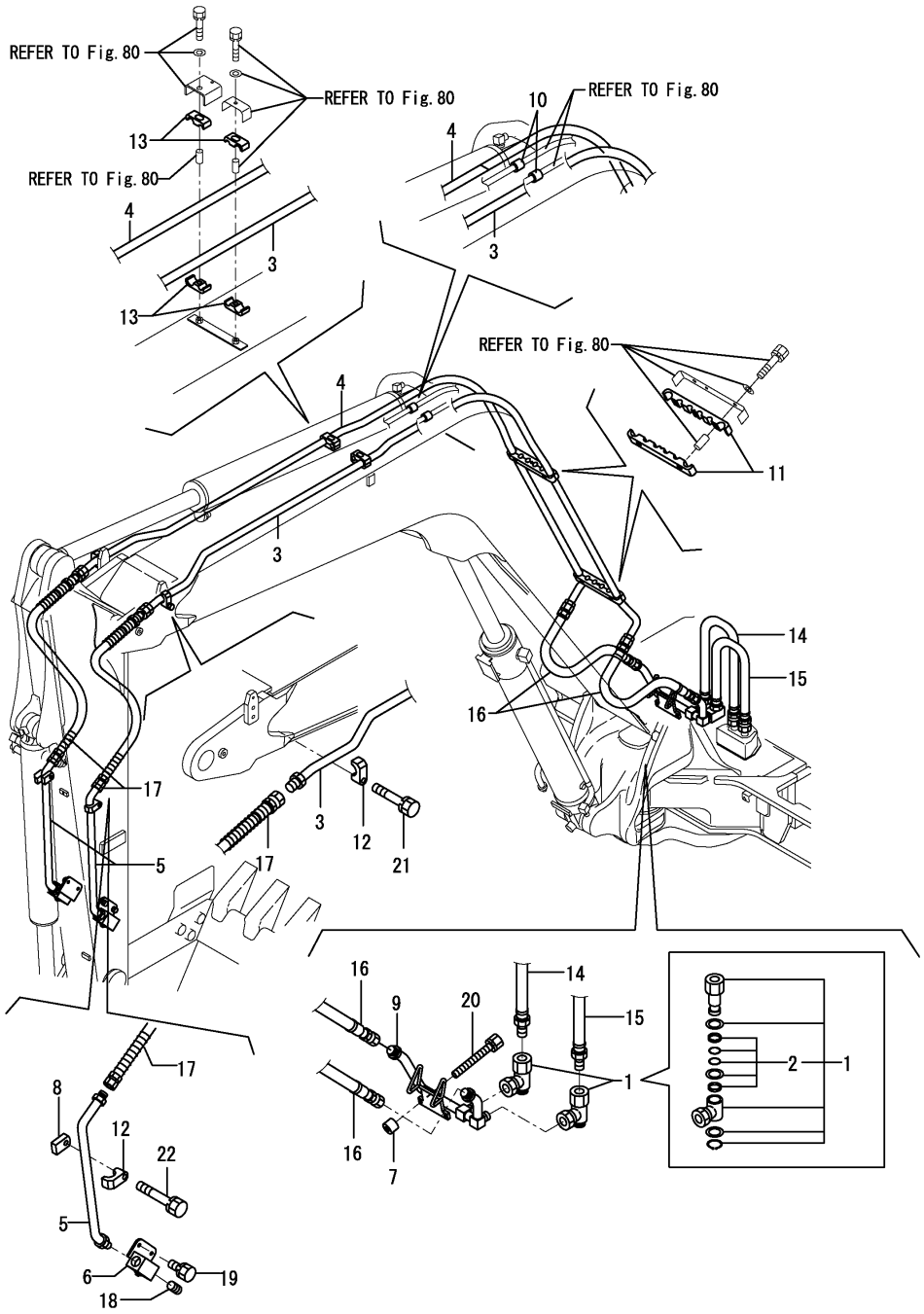

(A)=SV100(US) (D)=
(B)=SV100(AS) (E)=
(C)=SV100(NZ) (F)=

No.	Lev.	Parts No.	Description	Q'ty (A)	(B)	(C)	(D)	(E)	(F)	I	R
1	1	172142-76280	JOINT, SWIVEL	2	2	2					
2	2	172142-77050	SEAL SET	2	2	2					
3	1	172187-76460-1	TUBE, 3RD	1	1	1					
3-1	1	172187-76460-2	TUBE, 3RD	1	1	1				S	
	(A=M/#01231)	(B=M/#01231)	(C=M/#01231)								
4	1	172187-76480-1	TUBE, 3RD	1	1	1					
4-1	1	172187-76480-2	TUBE, 3RD	1	1	1				S	
	(A=M/#01231)	(B=M/#01231)	(C=M/#01231)								
5	1	172499-76500	TUBE ASSY, ARM	2	2	2					
5-1	1	172499-76500-1	TUBE ASSY, ARM	2	2	2				S	
	(A=M/#01231)	(B=M/#01231)	(C=M/#01231)								
6	1	172176-76580-2	STOP VALVE (YELLOW87	2	2	2					
6-1	1	172176-76581-2	VALVE, STOP (87)	2	2	2				R	
	(A=M/#00719)	(B=M/#00719)	(C=M/#00719)								
6-2	1	172176-76581-5	VALVE, STOP (2J)	2	2	2				S	
	(A=M/#01231)	(B=M/#01231)	(C=M/#01231)								
7	1	172478-76670	COLLAR, 10X25X22.5	2	2	2					
8	1	172187-76690-1	PLATE,T16(YELLOW:87)	2	2	2					
8-1	1	172187-76690-2	PLATE,T16(YELLOW:2J)	2	2	2				S	
	(A=M/#01231)	(B=M/#01231)	(C=M/#01231)								
9	1	172478-76702	TUBE ASSY, 3RD	1	1	1					
9-1	1	172478-76702-2	TUBE ASSY, 3RD	1	1	1				S	
	(A=M/#01231)	(B=M/#01231)	(C=M/#01231)								
10	1	172478-76730	GUARD, HOSE	2	2	2					
11	1	172187-76930	RUBBER	4	4	4					
12	1	172142-76940	CLAMP	4	4	4					
12-1	1	172142-76940-2	CLAMP	4	4	4				S	
	(A=M/#01231)	(B=M/#01231)	(C=M/#01231)								
13	1	172187-76940	RUBBER	4	4	4					
14	1	172187-79220	HOSE	1	1	1					
15	1	172187-79230	HOSE	1	1	1					
16	1	172187-79240	HOSE	2	2	2					
17	1	172187-79300	HOSE	2	2	2					
18	1	23871-060000	PLUG, R06	2	2	2					
19	1	26013-100252	BOLT, M10X 25	4	4	4					
20	1	26013-100502	BOLT, M10X 50	2	2	2					
21	1	26013-120552	BOLT, M12X 55	2	2	2					
22	1	26013-120702	BOLT, M12X 70	2	2	2					

N:Old $\frac{\text{Yes}}{\text{No}}$ New, Q:Old $\frac{\text{No}}{\text{Yes}}$ New, R:Old $\frac{\text{Yes}}{\text{Yes}}$ New, S:Old $\frac{\text{No}}{\text{No}}$ New, W:Add, Z:Discontinued, F:Interchangeable by set, K:Q'ty Change

Copyright (C) YANMAR CO., LTD. All RightsReserved.

Fig.82. HYD.OIL PIPING(QUICK COUPLER)

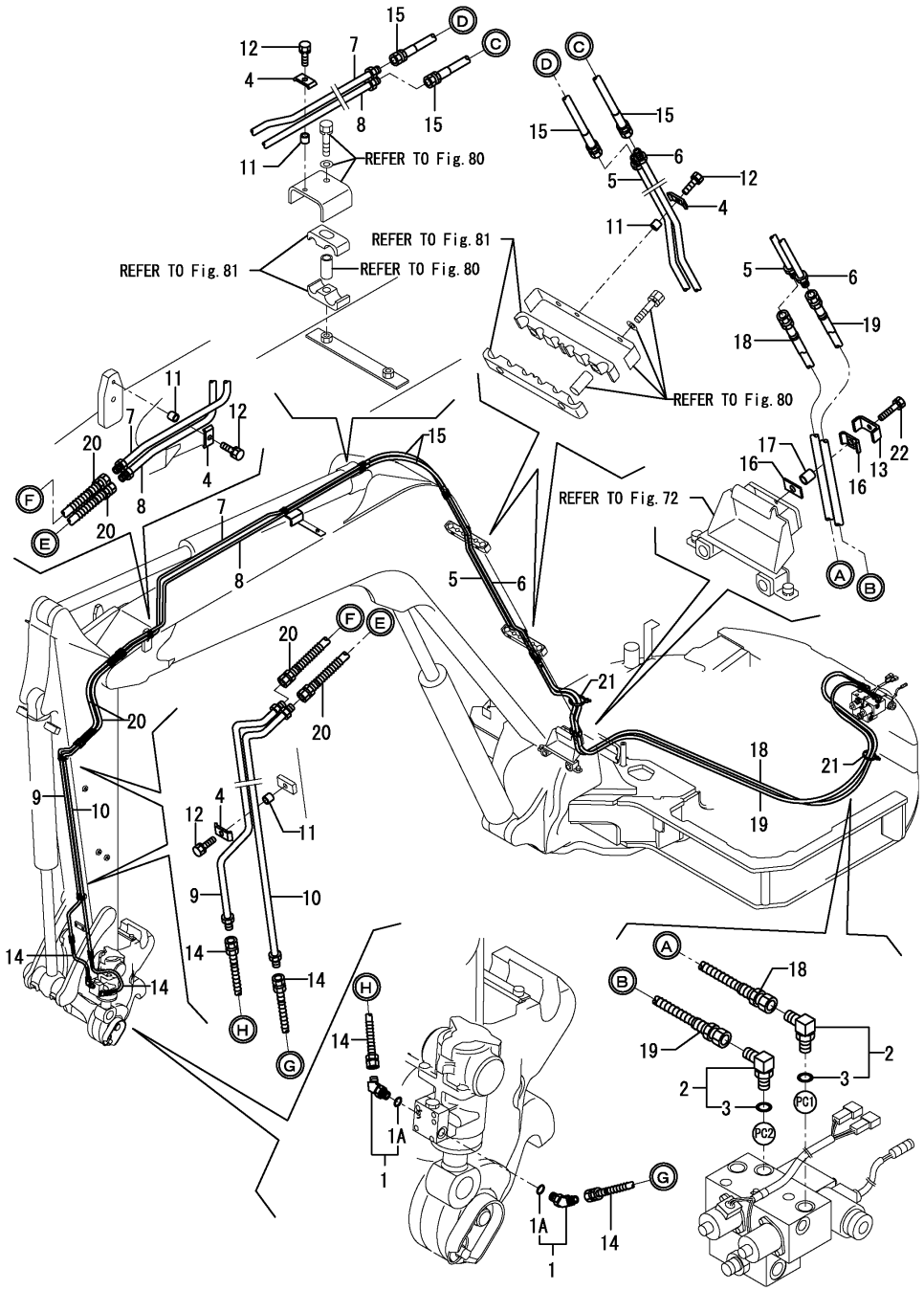

(A)=SV100(US) (D)=
(B)=SV100(AS) (E)=
(C)=SV100(NZ) (F)=

No.	Lev.	Parts No.	Description	Q'ty (A)	(B)	(C)	(D)	(E)	(F)	I	R
1	1	172978-76100	ELBOW	2	2	2					
1A	2	24315-000110	O-RING, 1BP11.0	2	2	2				W	
	(A=MZZZZZ)	(B=MZZZZZ)	(C=MZZZZZ)								
2	1	172141-76180	CONNECTOR ASSY	2	2	2					
2-1	1	172141-76181	CONNECTOR ASSY, 02FF	2	2	2				N	
	(A=M/#01471)	(B=M/#01471)	(C=M/#01471)								
3	2	24315-000110	O-RING, 1BP11.0	2	2	2					
3-1	2	41851-000110	O-RING	2	2	2				N	
	(A=M/#01471)	(B=M/#01471)	(C=M/#01471)								
4	1	172110-76170-1	PLATE (YELLOW:87)	6	6	6					
4-1	1	172110-76170-3	PLATE (YELLOW:2J)	6	6	6				S	
	(A=M/#01231)	(B=M/#01231)	(C=M/#01231)								
5	1	172978-76401	TUBE ASSY	1	1	1					
5-1	1	172978-76401-2	TUBE ASSY	1	1	1				S	
	(A=M/#01231)	(B=M/#01231)	(C=M/#01231)								
6	1	172978-76420	TUBE	1	1	1					
6-1	1	172978-76420-2	TUBE	1	1	1				S	
	(A=M/#01231)	(B=M/#01231)	(C=M/#01231)								
7	1	172978-76440	TUBE	1	1	1					
7-1	1	172978-76440-2	TUBE	1	1	1				S	
	(A=M/#01231)	(B=M/#01231)	(C=M/#01231)								
8	1	172978-76460	TUBE	1	1	1					
8-1	1	172978-76460-2	TUBE	1	1	1				S	
	(A=M/#01231)	(B=M/#01231)	(C=M/#01231)								
9	1	172978-76480	TUBE ASSY, ARM	1	1	1					
9-1	1	172978-76480-2	TUBE ASSY, ARM	1	1	1				S	
	(A=M/#01231)	(B=M/#01231)	(C=M/#01231)								
10	1	172978-76500	TUBE ASSY, ARM	1	1	1					
10-1	1	172978-76500-2	TUBE ASSY, ARM	1	1	1				S	
	(A=M/#01231)	(B=M/#01231)	(C=M/#01231)								
11	1	172137-76580	COLLAR	6	6	6					
12	1	26014-080252	BOLT, M8X 25	6	6	6					
13	1	172478-76520-1	CLAMP	1	1	1					
13-1	1	172478-76520-2	CLAMP, 45X25	1	1	1				S	
	(A=M/#01231)	(B=M/#01231)	(C=M/#01231)								
14	1	172958-78120	HOSE	2	2	2					
15	1	172978-78120	HOSE	2	2	2					
16	1	172156-78490	PLATE, RUBBER (B	2	2	2					
17	1	172156-78540	COLLAR, 9X18	1	1	1					
18	1	172499-79100	HOSE	1	1	1					
18-1	1	172499-79101	HOSE	1	1	1				N	
	(A=M/#00949)	(B=M/#00949)	(C=M/#00949)								
19	1	172499-79110	HOSE	1	1	1					
19-1	1	172499-79111	HOSE	1	1	1				N	
	(A=M/#00949)	(B=M/#00949)	(C=M/#00949)								
20	1	172499-79120	HOSE	2	2	2					
21	1	172122-79930	CLAMP, HOSE	2	2	2					
22	1	26014-080352	BOLT, M8X 35	1	1	1					

N:Old $\overset{\text{Yes}}{\underset{\text{No}}{\leftrightarrow}}$ New, Q:Old $\overset{\text{No}}{\underset{\text{Yes}}{\leftrightarrow}}$ New, R:Old $\overset{\text{Yes}}{\underset{\text{Yes}}{\leftrightarrow}}$ New, S:Old $\overset{\text{No}}{\underset{\text{No}}{\leftrightarrow}}$ New, W:Add, Z:Discontinued, F:Interchangeable by set, K:Q'ty Change

Copyright (C) YANMAR CO., LTD. All RightsReserved.

Fig.83. CONTROL PIPING(RETURN)

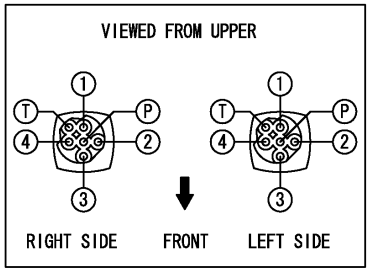

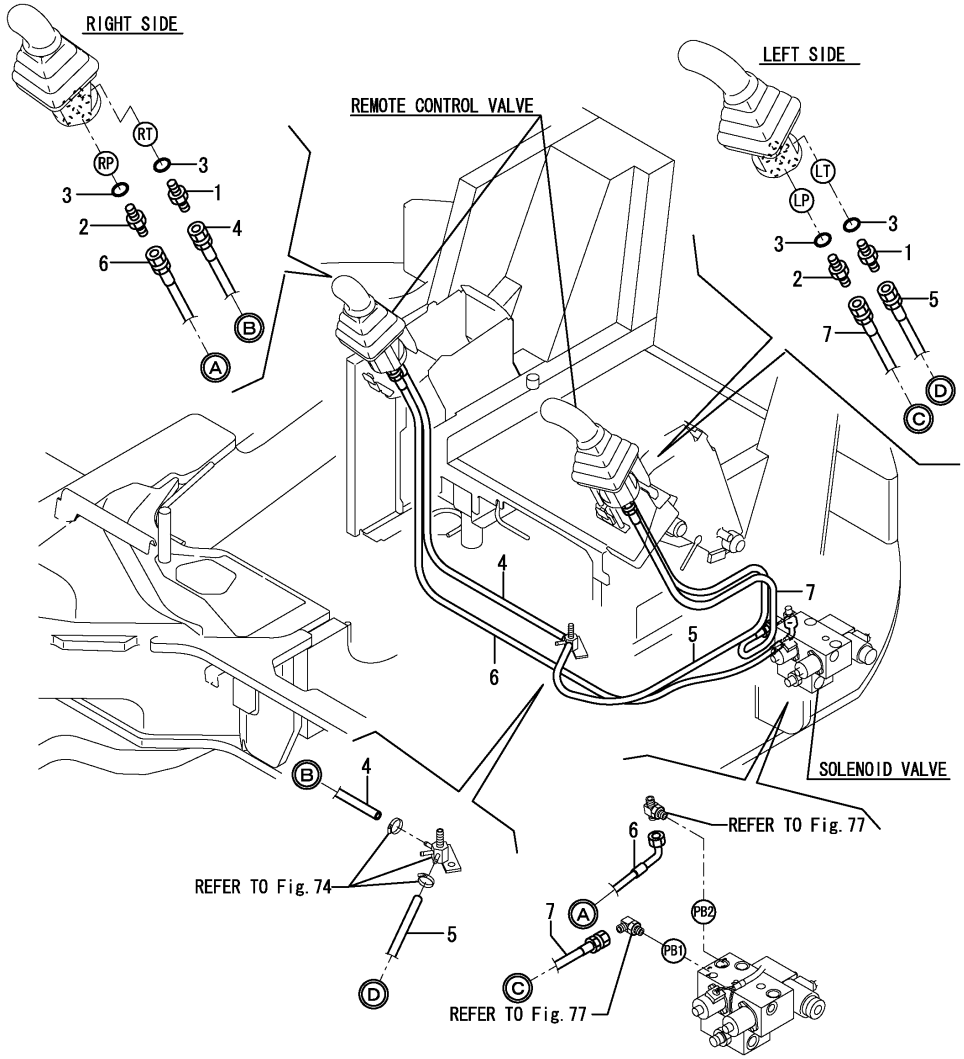

(A)=SV100(US) (D)=
(B)=SV100(AS) (E)=
(C)=SV100(NZ) (F)=

No.	Lev.	Parts No.	Description	Q'ty (A)	(B)	(C)	(D)	(E)	(F)	I	R
1	1	172123-76121	ADAPTER	2	2	2					
2	1	172455-76220	CONNECTOR	2	2	2					
3	1	24315-000110	O-RING, 1BP11.0	4	4	4					
3-1	1	41851-000110	O-RING	4	4	4				N	
	(A=M/#01600)	(B=M/#01600)	(C=M/#01600)								
4	1	172478-78500	HOSE	1	1	1					
5	1	172478-78510	HOSE	1	1	1					
6	1	172499-78870	HOSE	1	1	1					
7	1	172499-78880	HOSE	1	1	1					

N:Old $\frac{\text{Yes}}{\text{No}}$ New, Q:Old $\frac{\text{No}}{\text{Yes}}$ New, R:Old $\frac{\text{Yes}}{\text{Yes}}$ New, S:Old $\frac{\text{No}}{\text{No}}$ New, W:Add, Z:Discontinued, F:Interchangeable by set, K:Q'ty Change

Copyright (C) YANMAR CO., LTD. All RightsReserved.

Fig.84. CONTROL PIPING(REMOTE CONTROL VALVE - 2-WAY VALVE)

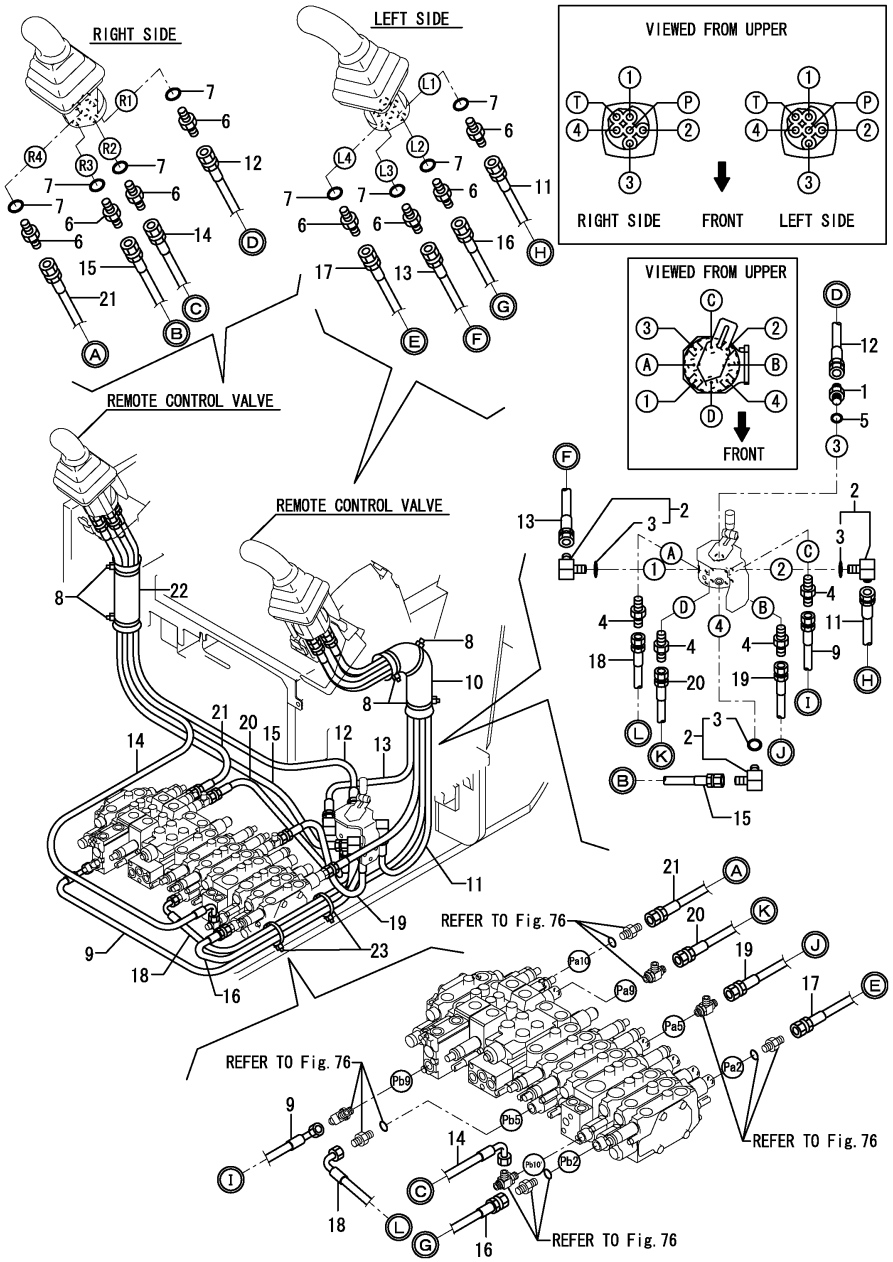

(A)=SV100(US) (D)=
(B)=SV100(AS) (E)=
(C)=SV100(NZ) (F)=

No.	Lev.	Parts No.	Description	Q'ty (A)	(B)	(C)	(D)	(E)	(F)	I	R
1	1	172123-76121	ADAPTER	1	1	1					
2	1	172141-76180	CONNECTOR ASSY	3	3	3					
2-1	1	172141-76181	CONNECTOR ASSY, 02FF	3	3	3				N	
	(A=M/#01471)	(B=M/#01471)	(C=M/#01471)								
3	2	24315-000110	O-RING, 1BP11.0	3	3	3					
3-1	2	41851-000110	O-RING	3	3	3				N	
	(A=M/#01471)	(B=M/#01471)	(C=M/#01471)								
4	1	23391-020000	JOINT, RGI-1/4	4	4	4					
5	1	24315-000110	O-RING, 1BP11.0	1	1	1					
5-1	1	41851-000110	O-RING	1	1	1				N	
	(A=M/#01600)	(B=M/#01600)	(C=M/#01600)								
6	1	172123-76121	ADAPTER	8	8	8					
7	1	24315-000110	O-RING, 1BP11.0	8	8	8					
7-1	1	41851-000110	O-RING	8	8	8				N	
	(A=M/#01600)	(B=M/#01600)	(C=M/#01600)								
8	1	172126-11510	BAND 300	5	5	5					
9	1	172463-78240	HOSE	1	1	1					
10	1	172472-78800	SPONGE, HOSE	1	1	1					
11	1	172478-78800	HOSE	1	1	1					
12	1	172478-78810	HOSE	1	1	1					
13	1	172478-78820	HOSE	1	1	1					
14	1	172499-78820	HOSE	1	1	1					
15	1	172478-78830	HOSE	1	1	1					
16	1	172499-78840	HOSE	1	1	1					
17	1	172499-78860	HOSE	1	1	1					
18	1	172499-78950	HOSE	1	1	1					
19	1	172455-79210	HOSE	1	1	1					
20	1	172437-79320	HOSE	1	1	1					
21	1	172478-79620	HOSE	1	1	1					1
	(A=M/#01290)	(B=M/#01290)	(C=M/#01290)								
22	1	172165-79810	SPONGE, HOSE	1	1	1					
23	1	172122-79930	CLAMP, HOSE	4	4	4					

Remarks
(1)LENGTH:1080MM TO 1230MM.

N:Old $\xleftarrow[\text{No}]{\text{Yes}}$ New, Q:Old $\xleftarrow[\text{Yes}]{\text{No}}$ New, R:Old $\xleftarrow[\text{Yes}]{\text{Yes}}$ New, S:Old $\xleftarrow[\text{No}]{\text{No}}$ New, W:Add, Z:Discontinued, F:Interchangeable by set, K:Q'ty Change

Copyright (C) YANMAR CO., LTD. All RightsReserved.

Fig.85. GREASING

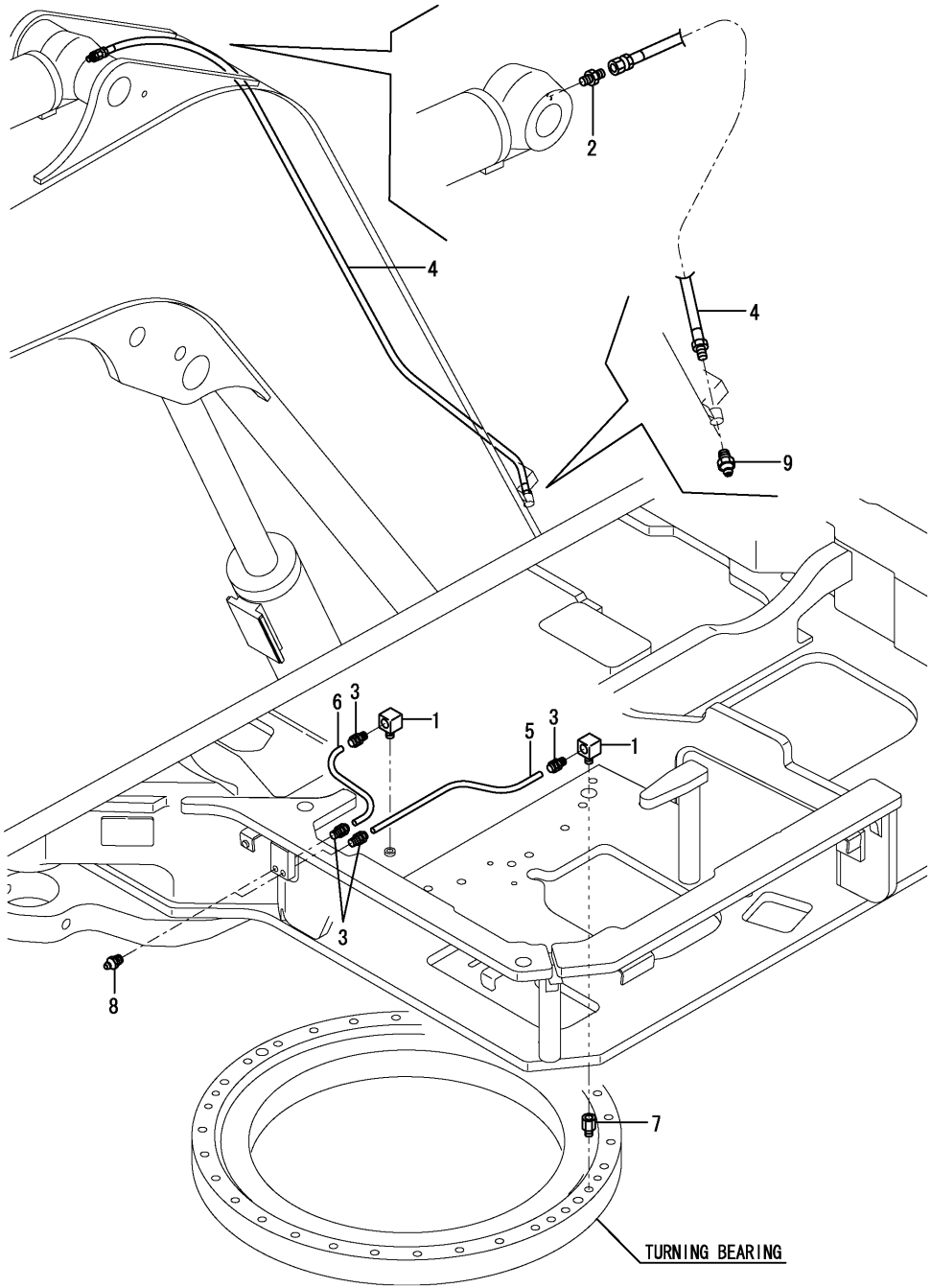

(A)=SV100(US) (D)=
(B)=SV100(AS) (E)=
(C)=SV100(NZ) (F)=

No.	Lev.	Parts No.	Description	Q'ty (A)	(B)	(C)	(D)	(E)	(F)	I	R
1	1	172112-77480	ELBOW	2	2	2					
2	1	172112-77580	JOINT, 1/8	1	1	1					
3	1	172141-77800	JOINT, GREASE	4	4	4					
4	1	172187-77800	HOSE	1	1	1					
5	1	172142-77811	HOSE	1	1	1					
6	1	172183-77810	HOSE	1	1	1					
7	1	172312-77820	FITTING, GREASE	1	1	1					
8	1	24761-020000	NIPPLE, GREASE PT1/8	2	2	2					
9	1	24761-020000	NIPPLE, GREASE PT1/8	1	1	1					

N:Old $\xleftarrow[\text{No}]{\text{Yes}}$ New, Q:Old $\xleftarrow[\text{Yes}]{\text{No}}$ New, R:Old $\xleftarrow[\text{Yes}]{\text{Yes}}$ New, S:Old $\xleftarrow[\text{No}]{\text{No}}$ New, W:Add, Z:Discontinued, F:Interchangeable by set, K:Q'ty Change

Copyright (C) YANMAR CO., LTD. All RightsReserved.

Fig.86. BOOM BRACKET

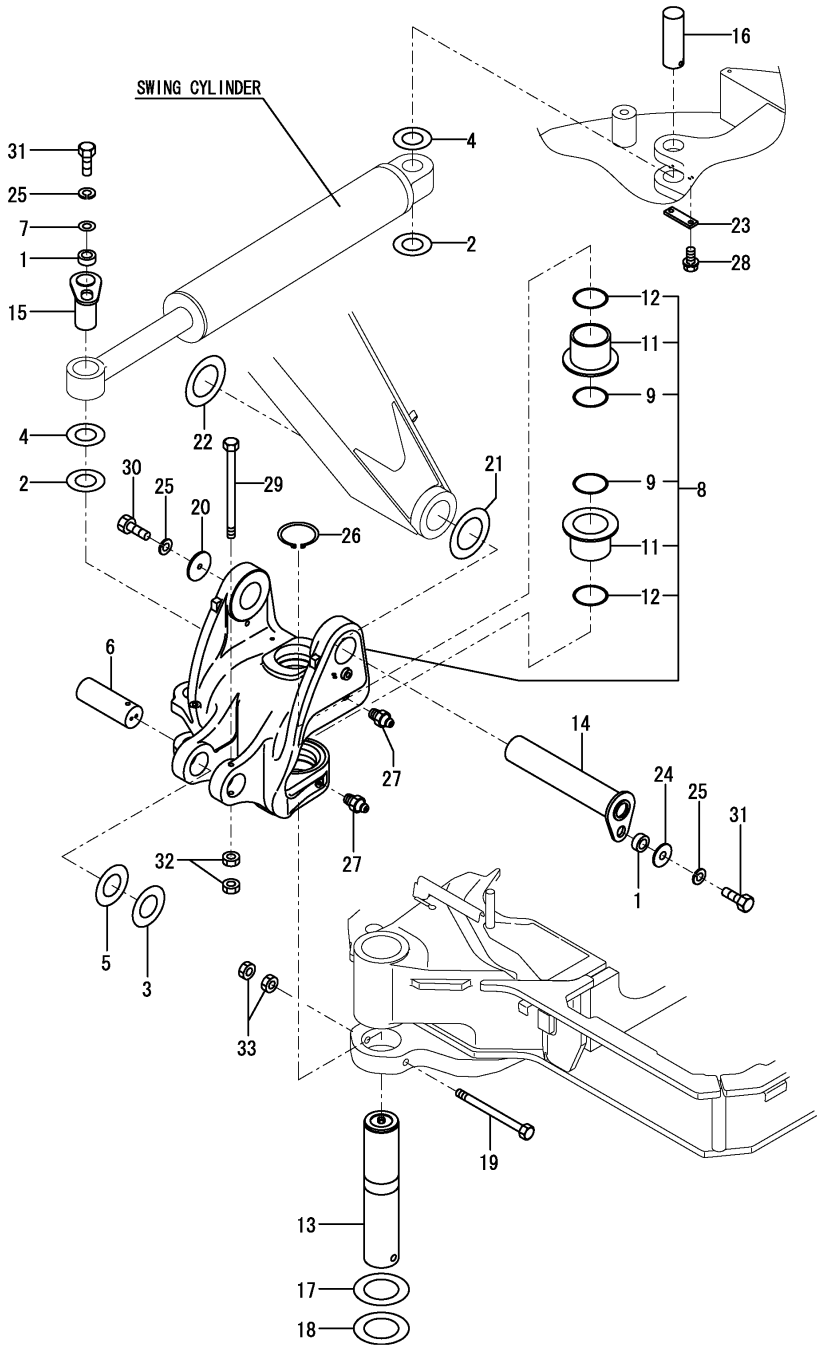

(A)=SV100(US) (D)=
(B)=SV100(AS) (E)=
(C)=SV100(NZ) (F)=

No.	Lev.	Parts No.	Description	Q'ty (A)	(B)	(C)	(D)	(E)	(F)	I	R
1	1	172155-45790	SPACER	2	2	2					
2	1	172175-81700	SHIM	4	4	4					
3	1	172176-81700	SHIM	1	1	1					
4	1	172175-81710	SHIM	2	2	2					
5	1	172176-81710	SHIM	1	1	1					
6	1	172187-81800	PIN 70X200	1	1	1					
7	1	172187-81970	WASHER	1	1	1					
8	1	172499-82300	BRACKET ,BOOM (87)	1	1	1					
8-1	1	172499-82301	BRACKET,BOOM (87)	1	1	1				N	
	(A=M/#00798)	(B=M/#00798)	(C=M/#00798)								
8-2	1	172499-82301-1	BRACKET,BOOM (2J)	1	1	1				S	
	(A=M/#01231)	(B=M/#01231)	(C=M/#01231)								
9	2	172162-81680	SEAL, DUST	2	2	2					
11	2	172187-82320	BUSH 100X90	2	2	2					
12	2	24321-001000	O-RING, 1AG100.0	2	2	2					
13	1	172499-82330	PIN 100X507 ASSY	1	1	1					
14	1	172187-82340	PIN 80X435	1	1	1					
15	1	172187-82370	PIN 60X144	1	1	1					
16	1	172187-82390	PIN 60X155	1	1	1					
17	1	172187-82400	SHIM	1	1	1					
18	1	172187-82410	SHIM	1	1	1					
19	1	172187-82420	BOLT 18X230	1	1	1					
20	1	172187-82430	WASHER 15X90X6	1	1	1					
21	1	172162-83600	SHIM	1	1	1					
22	1	172162-83610	SHIM	1	1	1					
23	1	172162-94280-2	PLATE,LOCK(GREEN:86)	1	1	1					
23-1	1	172162-94280-3	PLATE,LOCK (GRAY:49)	1	1	1				S	
	(A=M/#00758)	(B=M/#00758)	(C=M/#00758)								
24	1	22157-140000	WASHER, 14	1	1	1					
25	1	22217-140000	WASHER, SPRING 14	3	3	3					
26	1	22242-001000	RING, 100	1	1	1					
27	1	24761-020000	NIPPLE, GREASE PT1/8	2	2	2					
28	1	26013-120302	BOLT, M12X 30	2	2	2					
29	1	26116-121402	BOLT, M12X165 PLATED	1	1	1					
30	1	26116-140252	BOLT, M14X 25 PLATED	1	1	1					
31	1	26116-140352	BOLT, M14X 35 PLATED	2	2	2					
32	1	26716-120002	NUT, M12	2	2	2					
33	1	26716-180002	NUT, M18	2	2	2					

N:Old $\overset{\text{Yes}}{\underset{\text{No}}{\leftrightarrow}}$ New, Q:Old $\overset{\text{No}}{\underset{\text{Yes}}{\leftrightarrow}}$ New, R:Old $\overset{\text{Yes}}{\underset{\text{Yes}}{\leftrightarrow}}$ New, S:Old $\overset{\text{No}}{\underset{\text{No}}{\leftrightarrow}}$ New, W:Add, Z:Discontinued, F:Interchangeable by set, K:Q'ty Change

Copyright (C) YANMAR CO., LTD. All RightsReserved.

Fig.87. BOOM

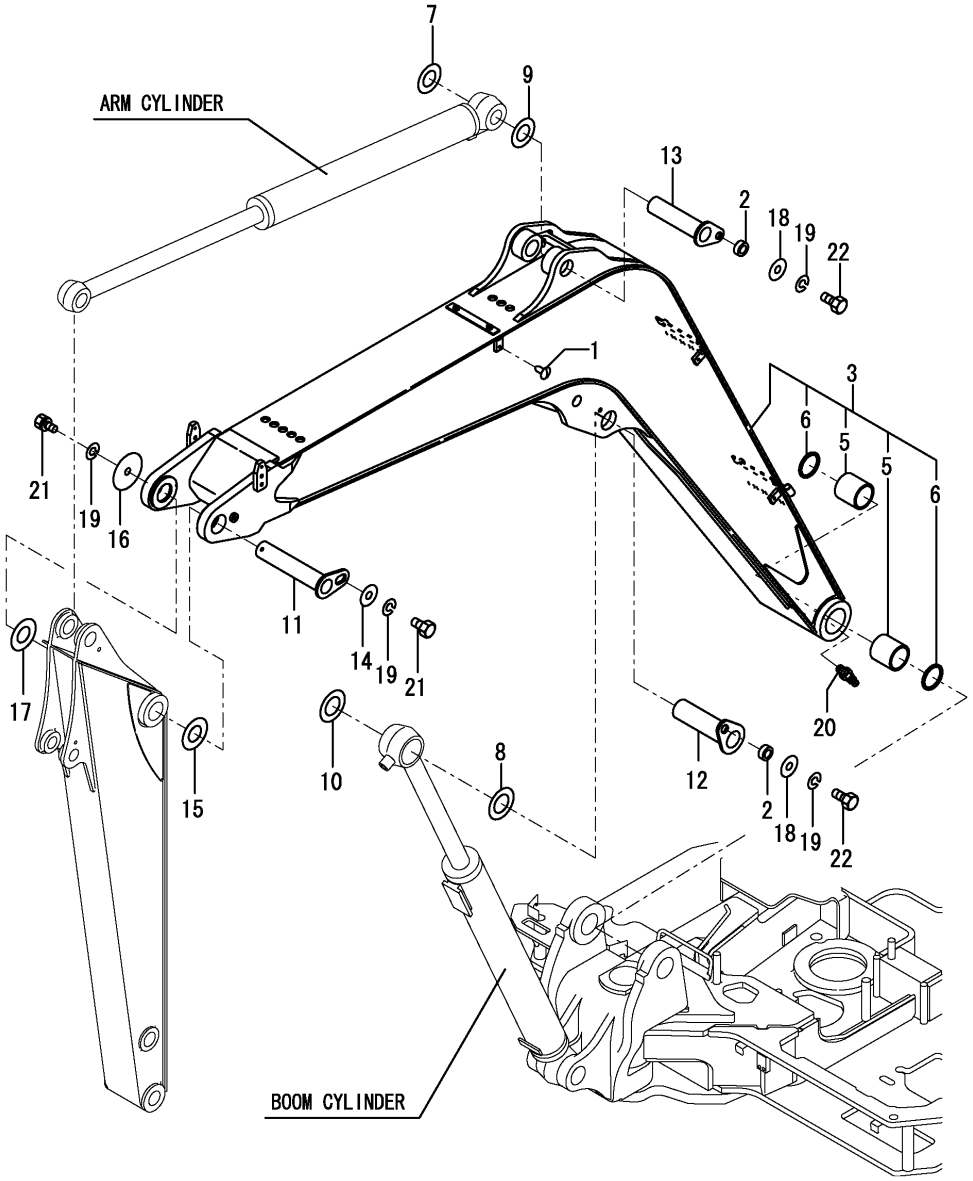

Remarks
(1)PLEASE USE THIS PART WITH FOLLOWING LABEL AT THE SAME TIME.
REF NO.23A.
(2)LABEL IS NOT ILLUSTRATED.

(A)=SV100(US) (D)=
(B)=SV100(AS) (E)=
(C)=SV100(NZ) (F)=

No.	Lev.	Parts No.	Description	Q'ty (A)	(B)	(C)	(D)	(E)	(F)	I	R
1	1	172444-17660	CLIP, TREE	6	6	6					
2	1	172155-45790	SPACER	2	2	2					
3	1	172499-81100	BOOM ASSY(YELLOW:87)	1	1	1					1
3-1	1	172499-81100-1	BOOM ASSY(YELLOW:2J)	1	1	1				S	1
	(A=M/#01231)	(B=M/#01231)	(C=M/#01231)								
5	2	172162-81370	BUSH 80X95	2	2	2					
6	2	172162-81430	SEAL, DUST	2	2	2					
7	1	172175-81700	SHIM	1	1	1					
7-1	1	172499-81850	SHIM	1	1	1				N	
	(A=M/#01032)	(B=M/#01032)	(C=M/#01032)								
8	1	172176-81700	SHIM	1	1	1					
9	1	172175-81710	SHIM	1	1	1					
9-1	1	172499-81860	SHIM	1	1	1				N	
	(A=M/#01032)	(B=M/#01032)	(C=M/#01032)								
10	1	172176-81710	SHIM	1	1	1					
11	1	172499-81750	PIN ASSY,70X315	1	1	1					
12	1	172187-81810	PIN 70X252	1	1	1					
13	1	172187-81840	PIN 60X243	1	1	1					
14	1	172187-81970	WASHER	1	1	1					
15	1	172445-81990	SHIM	1	1	1					
16	1	172187-82430	WASHER 15X90X6	1	1	1					
17	1	172162-83580	SHIM	1	1	1					
18	1	22157-140000	WASHER, 14	2	2	2					
19	1	22217-140000	WASHER, SPRING 14	4	4	4					
20	1	24761-040000	NIPPLE, GREASE B	1	1	1					
21	1	26116-140252	BOLT, M14X 25 PLATED	2	2	2					
22	1	26116-140352	BOLT, M14X 35 PLATED	2	2	2					
23A	1	172187-03941	LABEL, BOOM US	2	2	2					2

N:Old $\overset{\text{Yes}}{\underset{\text{No}}{\leftrightarrow}}$ New, Q:Old $\overset{\text{No}}{\underset{\text{Yes}}{\leftrightarrow}}$ New, R:Old $\overset{\text{Yes}}{\underset{\text{Yes}}{\leftrightarrow}}$ New, S:Old $\overset{\text{No}}{\underset{\text{No}}{\leftrightarrow}}$ New, W:Add, Z:Discontinued, F:Interchangeable by set, K:Q'ty Change

Copyright (C) YANMAR CO., LTD. All RightsReserved.

Fig.88. ARM

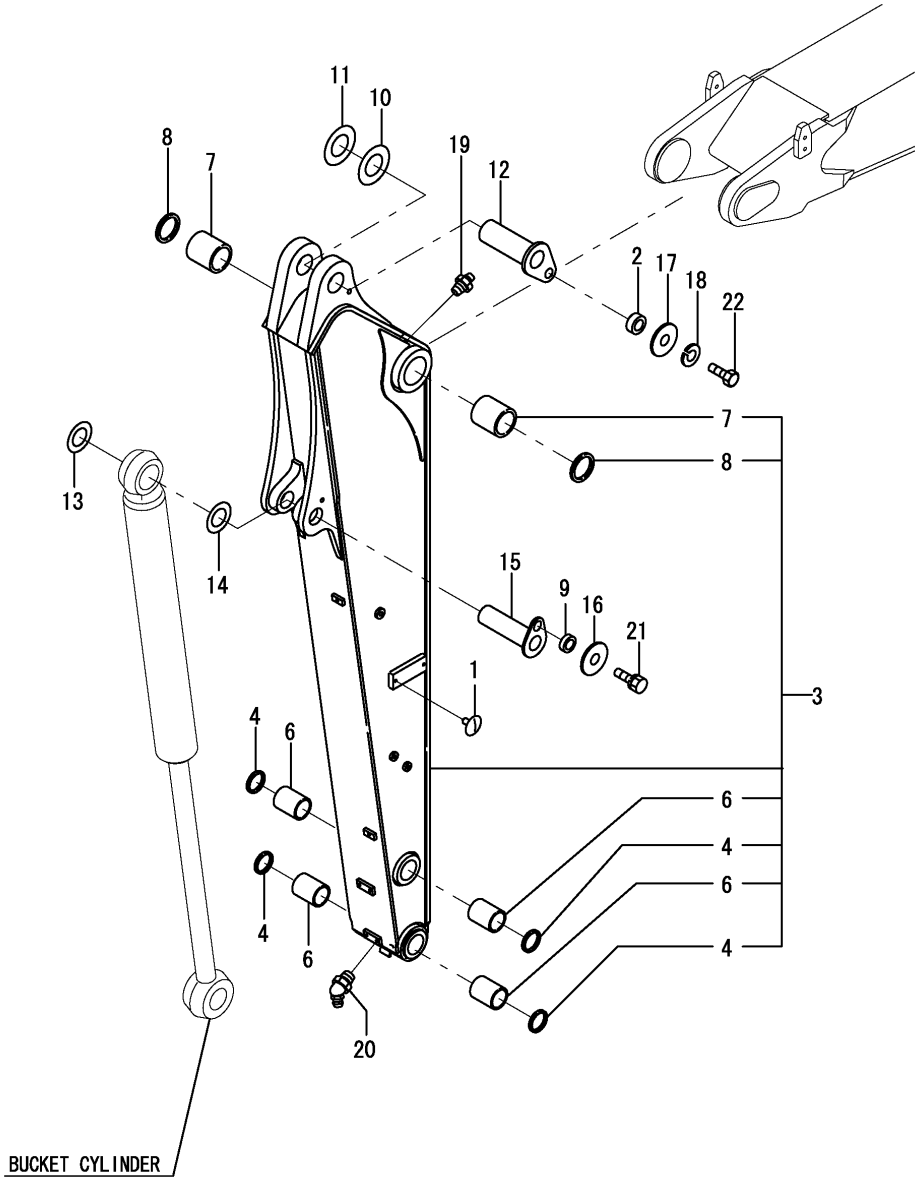

(A)=SV100(US) (D)=
(B)=SV100(AS) (E)=
(C)=SV100(NZ) (F)=

No.	Lev.	Parts No.	Description	Q'ty (A)	(B)	(C)	(D)	(E)	(F)	I	R
1	1	172444-17660	CLIP, TREE	4	4	4					
2	1	172155-45790	SPACER	1	1	1					
3	1	172499-81200	ARM ASSY	1	1	1					1
3-1	1	172499-81200-1	ARM ASSY	1	1	1				S	1
	(A=M/#01231)	(B=M/#01231)	(C=M/#01231)								
4	2	172448-54120	SEAL, DUST	4	4	4					
6	2	172187-81710	BUSH 50X75	4	4	4					
7	2	172162-82280	BUSH 70-85	2	2	2					
8	2	172162-82350	SEAL, DUST	2	2	2					
9	1	172164-81670	SPACER	1	1	1					
10	1	172175-81700	SHIM	1	1	1					
11	1	172175-81710	SHIM	1	1	1					
12	1	172499-81800	PIN ASSY,60X170	1	1	1					
13	1	172165-82520	SHIM	1	1	1					
14	1	172165-82530	SHIM	1	1	1					
15	1	172455-83300	PIN 50X174	1	1	1					
16	1	22157-120000	WASHER, 12	1	1	1					
17	1	22157-140000	WASHER, 14	1	1	1					
18	1	22217-140000	WASHER, SPRING 14	1	1	1					
19	1	24761-020000	NIPPLE, GREASE PT1/8	1	1	1					
20	1	24761-040000	NIPPLE, GREASE B	1	1	1					
21	1	26013-120302	BOLT, M12X 30	1	1	1					
22	1	26116-140352	BOLT, M14X 35 PLATED	1	1	1					
23A	1	172472-03261	LABEL, FINGER US	1	1	1					2
23B	1	172472-03271	LABEL, SAND US	1	1	1					2
23C	1	172472-03281	LABEL, WARNING HITCH	1	1	1					2
23D	1	172472-03330	LABEL,LOCK PIN(US	1	1	1					2

Remarks
(1)PLEASE USE THIS PART WITH FOLLOWING LABEL AT THE SAME TIME.
REF NO.23A,23B,23C & 23D.
(2)LABEL ARE NOT ILLUSTRATED.

N:Old $\xleftrightarrow[\text{No}]{\text{Yes}}$ New, Q:Old $\xleftrightarrow[\text{Yes}]{\text{No}}$ New, R:Old $\xleftrightarrow[\text{Yes}]{\text{Yes}}$ New, S:Old $\xleftrightarrow[\text{No}]{\text{No}}$ New, W:Add, Z:Discontinued, F:Interchangeable by set, K:Q'ty Change

Copyright (C) YANMAR CO., LTD. All RightsReserved.

Fig.89. BUCKET ARM & LINK

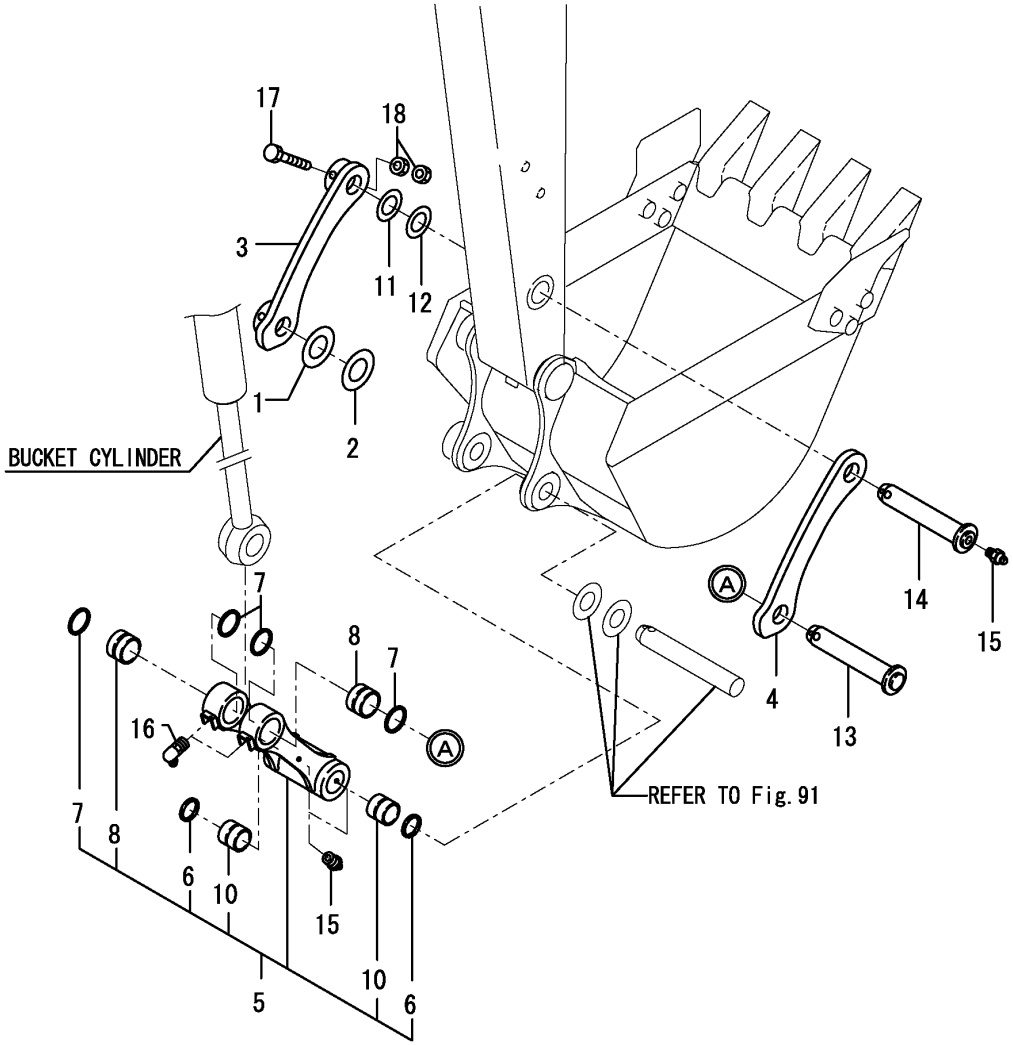

(A)=SV100(US) (D)=
(B)=SV100(AS) (E)=
(C)=SV100(NZ) (F)=

No.	Lev.	Parts No.	Description	Q'ty (A)	(B)	(C)	(D)	(E)	(F)	I	R
1	1	172175-81700	SHIM	1	1	1					
2	1	172175-81710	SHIM	1	1	1					
3	1	172455-82380-1	ARM, BUCKET	1	1	1					
3-1	1	172455-82380-2	ARM, BUCKET	1	1	1				S	
	(A=M/#01231)	(B=M/#01231)	(C=M/#01231)								
4	1	172455-82391-1	ARM, BUCKET	1	1	1					
4-1	1	172455-82391-2	ARM, BUCKET	1	1	1				S	
	(A=M/#01231)	(B=M/#01231)	(C=M/#01231)								
5	1	172499-82400	LINK ASSY,BUCKET(87)	1	1	1					
5-1	1	172499-82400-1	LINK ASSY,BUCKET(2J)	1	1	1				S	
	(A=M/#01231)	(B=M/#01231)	(C=M/#01231)								
6	2	172448-54120	SEAL, DUST	2	2	2					
7	2	172168-54760	SEAL, DUST	4	4	4					
8	2	172455-82360	BUSH 60X47	2	2	2					
10	2	172187-83040	BUSHING 50X60X54.5	2	2	2					
11	1	172165-82520	SHIM	1	1	1					
12	1	172165-82530	SHIM	1	1	1					
13	1	172455-83350	PIN 60X248	1	1	1					
14	1	172455-83360	PIN 50X248	1	1	1					
15	1	24761-020000	NIPPLE, GREASE PT1/8	3	3	3					
16	1	24761-050000	NIPPLE, GREASE C	2	2	2					
17	1	26116-161202	BOLT, M16X120 PLATED	2	2	2					
18	1	26716-160002	NUT, M16	4	4	4					

N:Old ◄Yes/No► New, Q:Old ◄No/Yes► New, R:Old ◄Yes/Yes► New, S:Old ◄No/No► New, W:Add, Z:Discontinued, F:Interchangeable by set, K:Q'ty Change

Copyright (C) YANMAR CO., LTD. All RightsReserved.

Fig.90. QUICK COUPLER

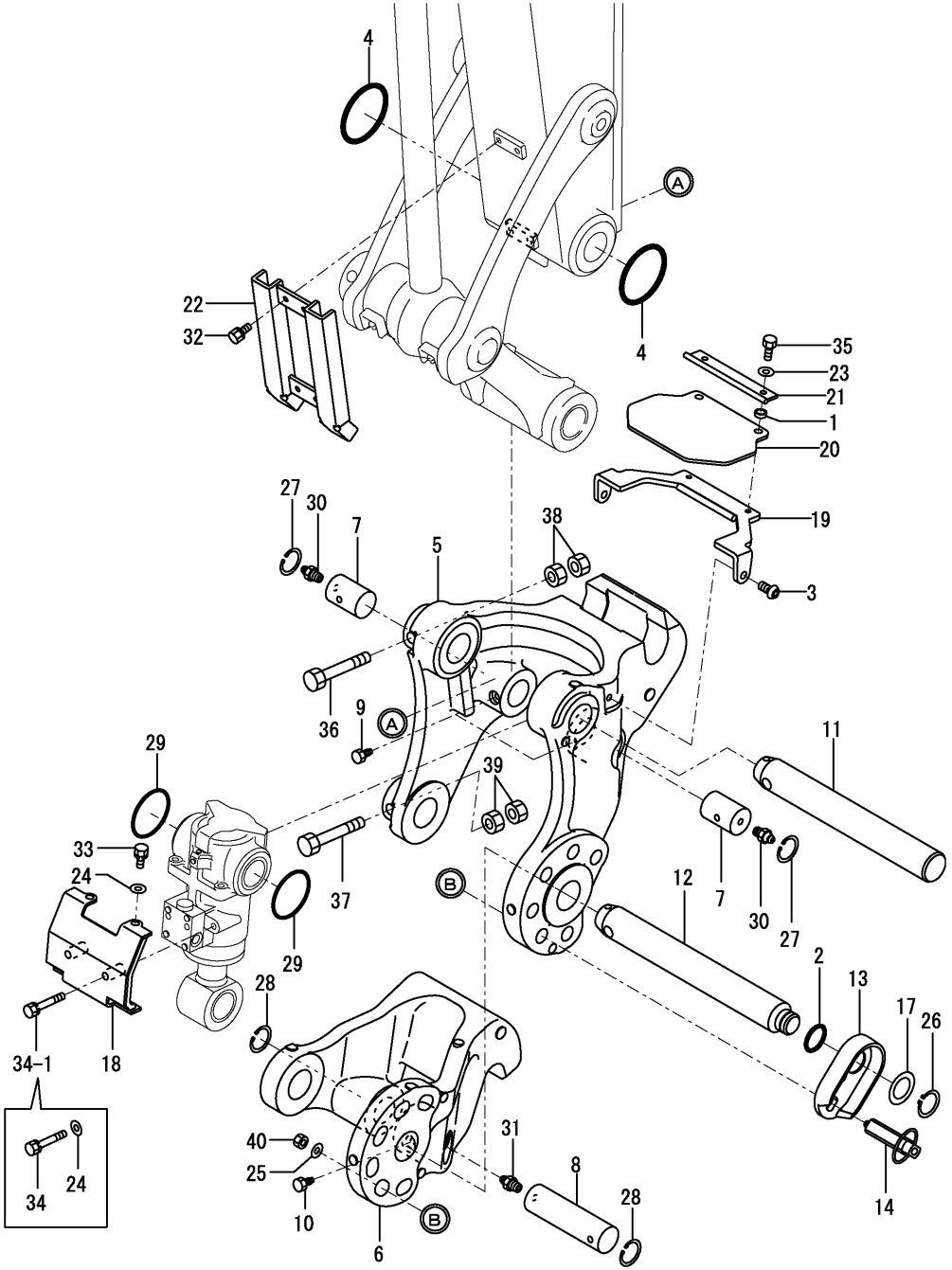

(A)=SV100(US) (D)=
(B)=SV100(AS) (E)=
(C)=SV100(NZ) (F)=

No.	Lev.	Parts No.	Description	Q'ty (A)	(B)	(C)	(D)	(E)	(F)	I	R
1	1	172958-17120	COLLAR	2	2	2					
1-1	1	172958-17121	COLLAR, 9X4	2	2	2				N	
	(A=M/#01471)	(B=M/#01471)	(C=M/#01471)								
2	1	172124-46200	O-RING	1	1	1					
3	1	172455-61720	BOLT M 10X20	2	2	2					
4	1	172162-82360	O-RING	2	2	2					
5	1	172978-83101	BRACKET A(YEELOW:87)	1	1	1					
5-1	1	172978-83101-2	BRACKET A(YEELOW:2J)	1	1	1				S	
	(A=M/#01231)	(B=M/#01231)	(C=M/#01231)								
6	1	172978-83111	BRACKET B(YELLOW:87)	1	1	1					
6-1	1	172978-83111-2	BRACKET B(YELLOW:2J)	1	1	1				S	
	(A=M/#01231)	(B=M/#01231)	(C=M/#01231)								
7	1	172978-83120	PIN 45X65	2	2	2					
8	1	172978-83130	PIN 45X161	1	1	1					
9	1	172978-83140	BOLT	2	2	2					
10	1	172978-83140	BOLT	1	1	1					
11	1	172978-83150	PIN 50X345	1	1	1					
12	1	172978-83161	PIN 50X373	1	1	1					
13	1	172978-83170	PLATE,LOCK(YELLOW:87	1	1	1					
13-1	1	172978-83170-2	PLATE,LOCK(YELLOW:2J	1	1	1				S	
	(A=M/#01231)	(B=M/#01231)	(C=M/#01231)								
14	1	172978-83190	PIN,LOCK	1	1	1					
14-1	1	172978-83191	PIN,LOCK	1	1	1				N	
	(A=M/#01471)	(B=M/#01471)	(C=M/#01471)								
17	1	172960-83210	COLLAR	1	1	1					
18	1	172978-83221	COVER, HITCH	1	1	1					
18-1	1	172978-83221-2	COVER, HITCH	1	1	1				S	
	(A=M/#01231)	(B=M/#01231)	(C=M/#01231)								
19	1	172978-83270	GUARD ASSY	1	1	1					
19-1	1	172978-83270-2	GUARD ASSY	1	1	1				S	
	(A=M/#01231)	(B=M/#01231)	(C=M/#01231)								
20	1	172978-83290	PLATE,RUBBER	1	1	1					
20-1	1	172978-83291	PLATE,RUBBER	1	1	1				N	
	(A=M/#01471)	(B=M/#01471)	(C=M/#01471)								
20-2	1	172978-83292	PLATE,RUBBER	1	1	1				N	
	(A=M/#01571)	(B=M/#01571)	(C=M/#01571)								
21	1	172978-83300	PLATE (YELLOW:87)	1	1	1					
21-1	1	172978-83300-2	PLATE (YELLOW:2J)	1	1	1				S	
	(A=M/#01231)	(B=M/#01231)	(C=M/#01231)								
22	1	172978-83320	COVER, ARM	1	1	1					
22-1	1	172978-83320-2	COVER, ARM	1	1	1				S	
	(A=M/#01231)	(B=M/#01231)	(C=M/#01231)								
23	1	22137-080000	WASHER, 8	2	2	2					
24	1	22137-100000	WASHER, 10	4	4	4					
24-1	1	22137-100000	WASHER, 10	2	2	2				K	
	(A=MZZZZZ)	(B=MZZZZZ)	(C=MZZZZZ)								
25	1	22137-100000	WASHER, 10	1	1	1					
26	1	22242-000350	RING, 35	1	1	1					
27	1	22252-000450	RING, 45	2	2	2					
28	1	22252-000450	RING, 45	2	2	2					
29	1	24311-000700	O-RING, 1AP70.0	2	2	2					

N:Old $\overset{\text{Yes}}{\underset{\text{No}}{\leftrightarrow}}$ New, Q:Old $\overset{\text{No}}{\underset{\text{Yes}}{\leftrightarrow}}$ New, R:Old $\overset{\text{Yes}}{\underset{\text{Yes}}{\leftrightarrow}}$ New, S:Old $\overset{\text{No}}{\underset{\text{No}}{\leftrightarrow}}$ New, W:Add, Z:Discontinued, F:Interchangeable by set, K:Q'ty Change

++ CONTINUE ++

Copyright (C) YANMAR CO., LTD. All RightsReserved.

Fig.90. QUICK COUPLER

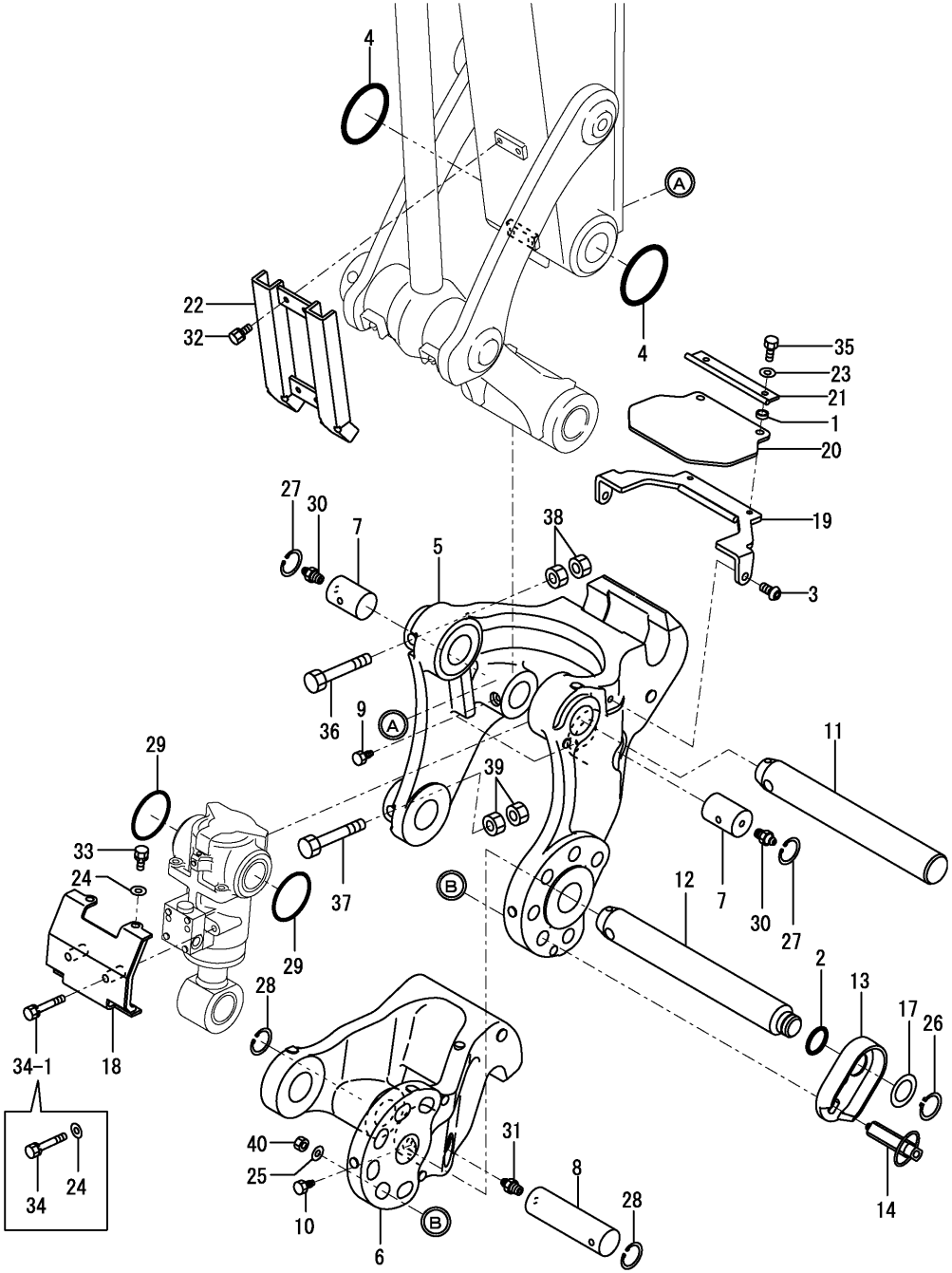

(A)=SV100(US) (D)=
(B)=SV100(AS) (E)=
(C)=SV100(NZ) (F)=

No.	Lev.	Parts No.	Description	Q'ty (A)	(B)	(C)	(D)	(E)	(F)	I	R
30	1	24761-020000	NIPPLE, GREASE PT1/8	2	2	2					
31	1	24761-020000	NIPPLE, GREASE PT1/8	1	1	1					
32	1	26013-080162	BOLT, M8X 16	4	4	4					
33	1	26013-100252	BOLT, M10X 25	2	2	2					
34	1	26013-100552	BOLT, M10X 55	2	2	2					
34-1	1	26013-100502	BOLT, M10X 50	2	2	2				N	
	(A=MZZZZZ)	(B=MZZZZZ)	(C=MZZZZZ)								
35	1	26116-080202	BOLT, M8X 20 PLATED	2	2	2					
36	1	26116-161202	BOLT, M16X120 PLATED	1	1	1					
37	1	26116-161202	BOLT, M16X120 PLATED	1	1	1					
38	1	26716-160002	NUT, M16	2	2	2					
39	1	26716-160002	NUT, M16	2	2	2					
40	1	26756-100002	NUT, LOCK M10	1	1	1					

N:Old $\xleftarrow[\text{No}]{\text{Yes}}$ New, Q:Old $\xleftarrow[\text{Yes}]{\text{No}}$ New, R:Old $\xleftarrow[\text{Yes}]{\text{Yes}}$ New, S:Old $\xleftarrow[\text{No}]{\text{No}}$ New, W:Add, Z:Discontinued, F:Interchangeable by set, K:Q'ty Change

Copyright (C) YANMAR CO., LTD. All RightsReserved.

Fig.91. BUCKET PIN

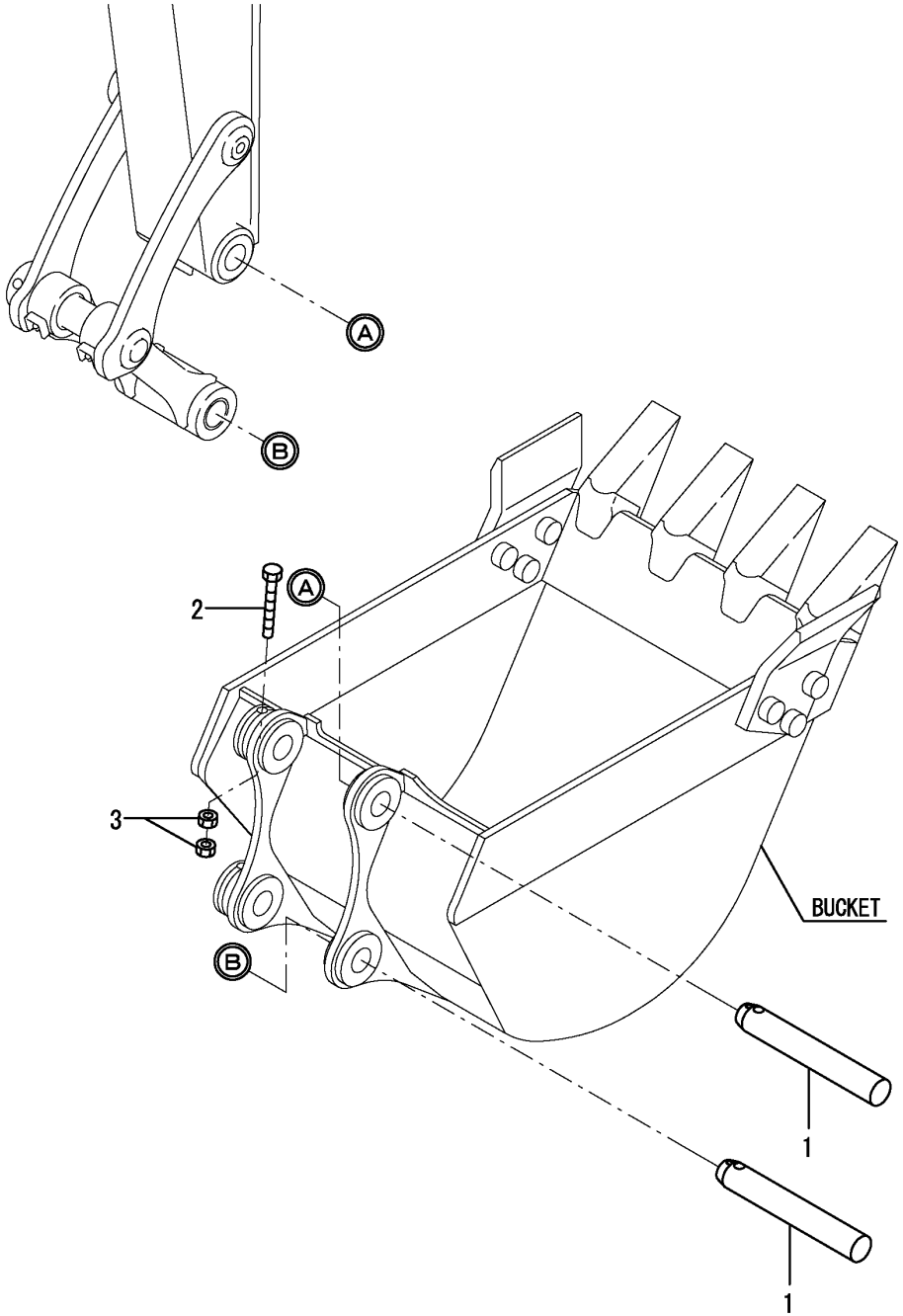

(A)=SV100(US) (D)=
(B)=SV100(AS) (E)=
(C)=SV100(NZ) (F)=

No.	Lev.	Parts No.	Description	Q'ty (A)	(B)	(C)	(D)	(E)	(F)	I	R
1	1	172978-81400	PIN 50X301	2	2	2				Z	
	(A=M/#01032)										
2	1	26116-161302	BOLT, M16X130 PLATED	2	2	2					
2-1	1	26076-161302	BOLT, 10.916X130	2	2	2				N	
	(A=M/#00547)	(B=M/#00547)	(C=M/#00547)								
2-2	1	26076-161302	BOLT, 10.916X130	2						Z	
	(A=M/#01032)										
3	1	26716-160002	NUT, M16	4	4	4				Z	
	(A=M/#01032)										

N:Old $\xleftarrow[\text{No}]{\text{Yes}}$ New, Q:Old $\xleftarrow[\text{Yes}]{\text{No}}$ New, R:Old $\xleftarrow[\text{Yes}]{\text{Yes}}$ New, S:Old $\xleftarrow[\text{No}]{\text{No}}$ New, W:Add, Z:Discontinued, F:Interchangeable by set, K:Q'ty Change

Copyright (C) YANMAR CO., LTD. All RightsReserved.

Fig.92. BLADE

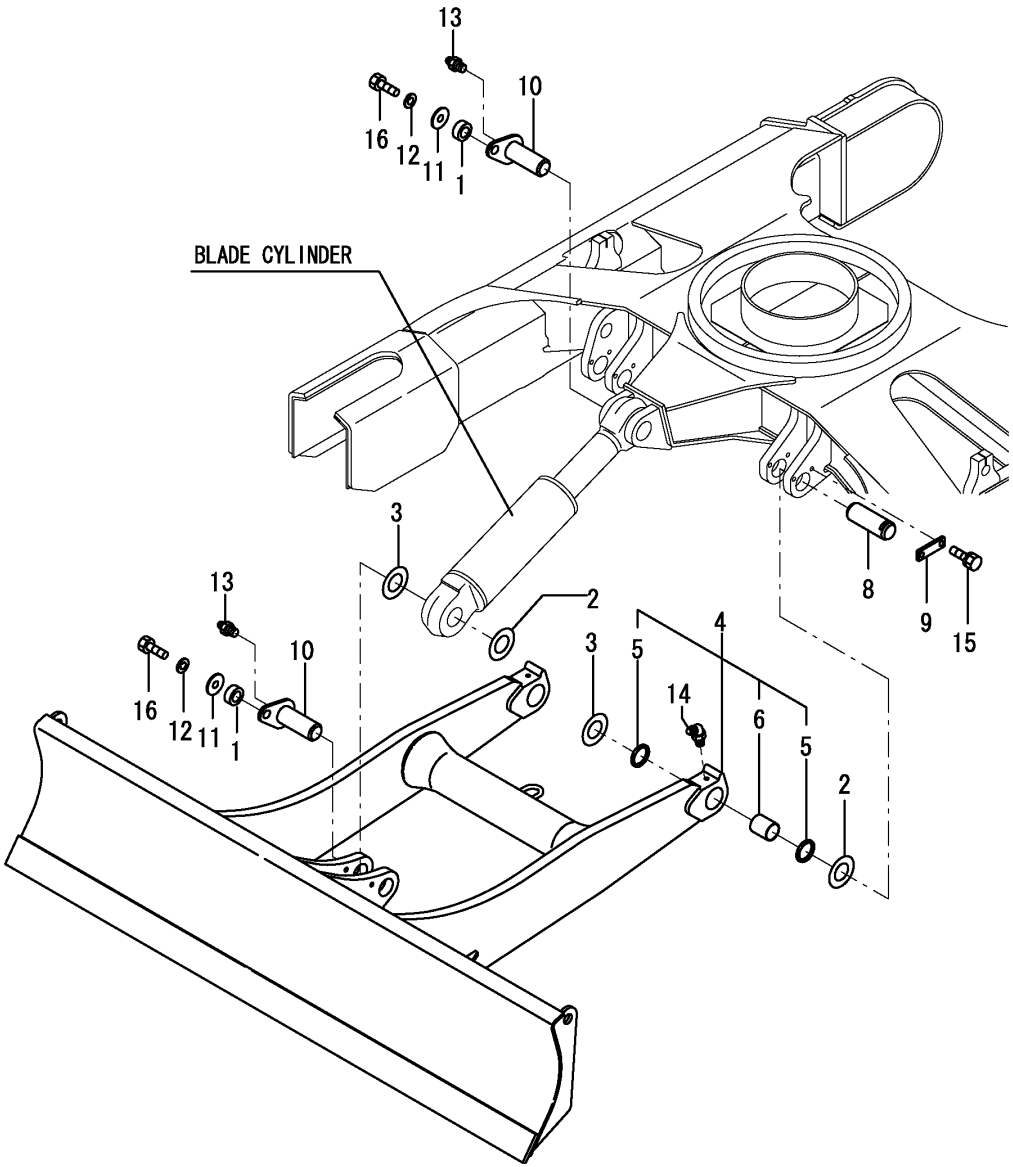

(A)=SV100(US) (D)=
(B)=SV100(AS) (E)=
(C)=SV100(NZ) (F)=

No.	Lev.	Parts No.	Description	Q'ty (A)	(B)	(C)	(D)	(E)	(F)	I	R
1	1	172155-45790	SPACER	2	2	2					
2	1	172175-81700	SHIM	4	4	4					
3	1	172175-81710	SHIM	4	4	4					
4	1	172499-94100	BLADE ASSY(GREEN:82)	1	1	1					
4-1	1	172499-94100-1	BLADE ASSY(GRAY:49)	1	1	1				S	
	(A=M/#00758)	(B=M/#00758)	(C=M/#00758)								
5	2	172020-10620	SEAL, DUST	4	4	4					
6	2	172162-81060	BUSH 60X55	2	2	2					
8	1	172162-94270	PIN	2	2	2					
9	1	172162-94280-1	PLATE,LOCK(GREEN:82)	2	2	2					
9-1	1	172162-94280-3	PLATE,LOCK (GRAY:49)	2	2	2				S	
	(A=M/#00758)	(B=M/#00758)	(C=M/#00758)								
10	1	172187-94300	PIN 60X147	2	2	2					
11	1	22157-140000	WASHER, 14	2	2	2					
12	1	22217-140000	WASHER, SPRING 14	2	2	2					
13	1	24761-020000	NIPPLE, GREASE PT1/8	2	2	2					
14	1	24761-040000	NIPPLE, GREASE B	2	2	2					
15	1	26013-120302	BOLT, M12X 30	4	4	4					
16	1	26116-140352	BOLT, M14X 35 PLATED	2	2	2					

N:Old $\frac{\text{Yes}}{\text{No}}$ New, Q:Old $\frac{\text{No}}{\text{Yes}}$ New, R:Old $\frac{\text{Yes}}{\text{Yes}}$ New, S:Old $\frac{\text{No}}{\text{No}}$ New, W:Add, Z:Discontinued, F:Interchangeable by set, K:Q'ty Change

Copyright (C) YANMAR CO., LTD. All RightsReserved.

Fig.93. TIM CABIN(BODY, ACCESSORY)(US)

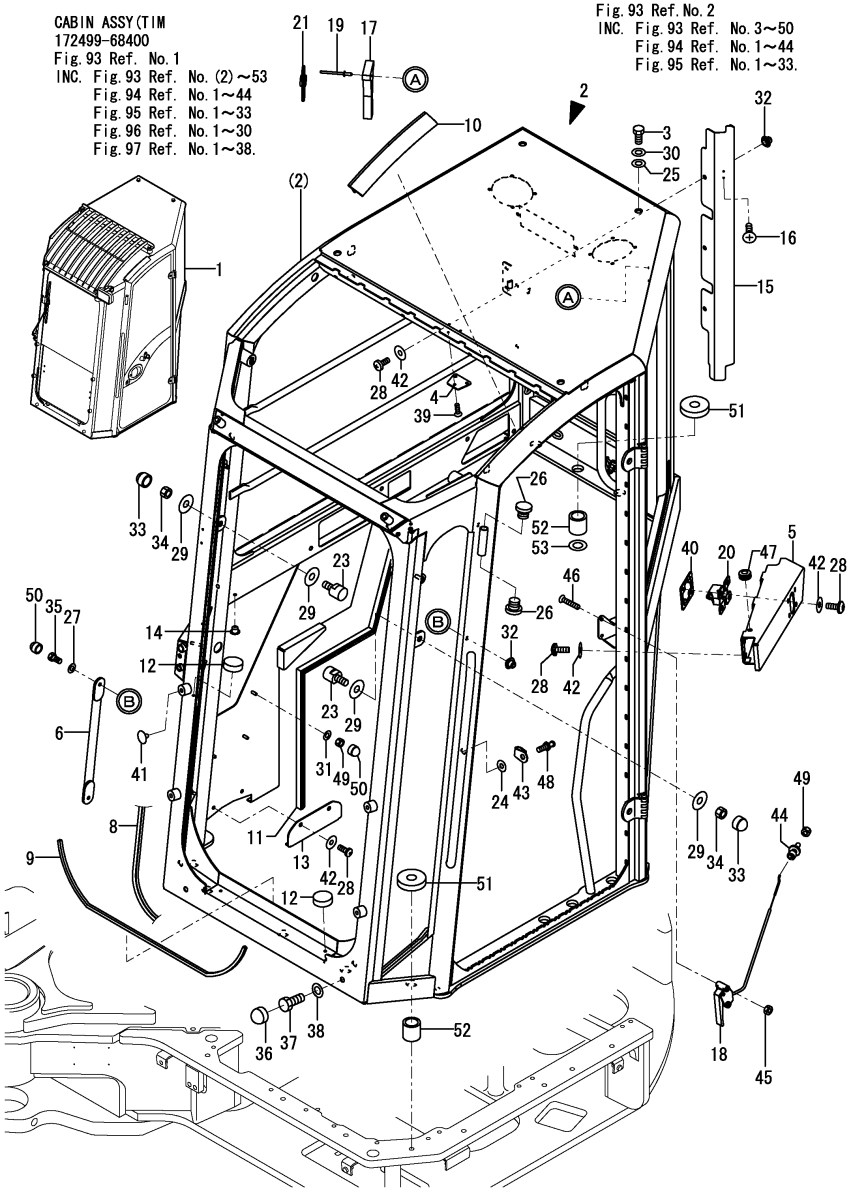

(A)=SV100(US) (D)=
(B)=SV100(AS) (E)=
(C)=SV100(NZ) (F)=

No.	Lev.	Parts No.	Description	Q'ty (A)	(B)	(C)	(D)	(E)	(F)	I	R
1	1	172499-68400	CABIN ASSY	1							
2	2	172499-68410	CABIN BODY(GREEN:86)	1							1
3	3	172456-68180	BOLT 16X30	2							
4	3	172456-68250	CAP	1							
5	3	172499-68420	BRACKET	1							
6	3	172A21-68460	INSIDE HANDLE	1							
8	3	172A21-68520	SEAL, RUBBER 3200	1							
9	3	172A21-68530	SEAL, RUBBER 680	1							
10	3	172A21-68540	ANTI-DROP,230	1							
11	3	172A21-68550	SEAL, RUBBER 2550	1							
12	3	172456-68550	STOPPER	4							
13	3	172A21-68570	TRAP	1							
14	3	172456-68570	PLUG	2							
15	3	172A21-68600	COVER	1							
16	3	172456-68650	SCREW, M3.5X12.7	2							
17	3	172456-68660	HAMMER	1							
18	3	172A21-68670	UNLOCK LEVER	1							
19	3	172456-68670	RIVET 3.2X8	4							
20	3	172A21-68680	LOCK,DOOR	1							
21	3	172456-68680	SEAL, BAND	1							
23	3	172A21-68740	LOCK,WINDSHIELD	2							
24	3	172456-68750	WASHER, 12X30X2	1							
25	3	172A21-68840	WASHER, 15X30X2	2							
26	3	172A21-68880	CAP	2							
27	3	172456-68930	WASHER	2							
28	3	172456-68950	SCREW, M6X16	15							
29	3	172A21-68980	WASHER, 9X25X2	4							
30	3	172A21-68990	WASHER	2							
31	3	172A21-69000	WASHER	3							
32	3	172A21-69020	NUT, M6	5							
33	3	172A21-69030	CAP, NUT M8	2							
34	3	172A21-69040	NUT, SELF LOCK	2							
35	3	172A21-69060	SCREW, M6X16	2							
36	3	172456-69240	CAP, NUT	2							
37	3	172456-69250	SCREW, M10X16	2							
38	3	172456-69260	SEAT, 10.2X18.5X2.5	2							
39	3	172456-69310	SCREW, M4.8X16	3							
40	3	172A21-69500	RETAINER	1							
41	3	172A21-69520	PLUG	4							
42	3	172456-69520	WASHER	15							
43	3	172A21-69560	PROTECTION	1							
44	3	172A21-69570	CABLE	1							
45	3	172A21-69590	NUT, M5	2							
46	3	172A21-69600	SCREW, M5X30	2							
47	3	172A21-69610	GROMMET	1							
48	3	172A21-69620	CATCH, DOOR	1							
49	3	172456-69900	NUT, M6	4							
50	3	172456-69910	CAP, NUT M6	5							
51	2	172A21-69430	WASHER, 36X12X8	11							
52	2	172A21-69440	SPACER, 22X16X22	11							
53	2	172456-69930	WASHER 12X22.5X2.5	3							

Remarks
(1)PLEASE USE THIS PART WITH FOLLOWING LABEL AT THE SAME TIME.
REF NO.54A,54B,54C,54D & 54E.
(2)LABEL IS NOT ILLUSTRATED.

N:Old $\frac{\text{Yes}}{\text{No}}$ New, Q:Old $\frac{\text{No}}{\text{Yes}}$ New, R:Old $\frac{\text{Yes}}{\text{Yes}}$ New, S:Old $\frac{\text{No}}{\text{No}}$ New, W:Add, Z:Discontinued, F:Interchangeable by set, K:Q'ty Change

++ CONTINUE ++

Copyright (C) YANMAR CO., LTD. All RightsReserved.

Fig.93. TIM CABIN(BODY, ACCESSORY)(US)

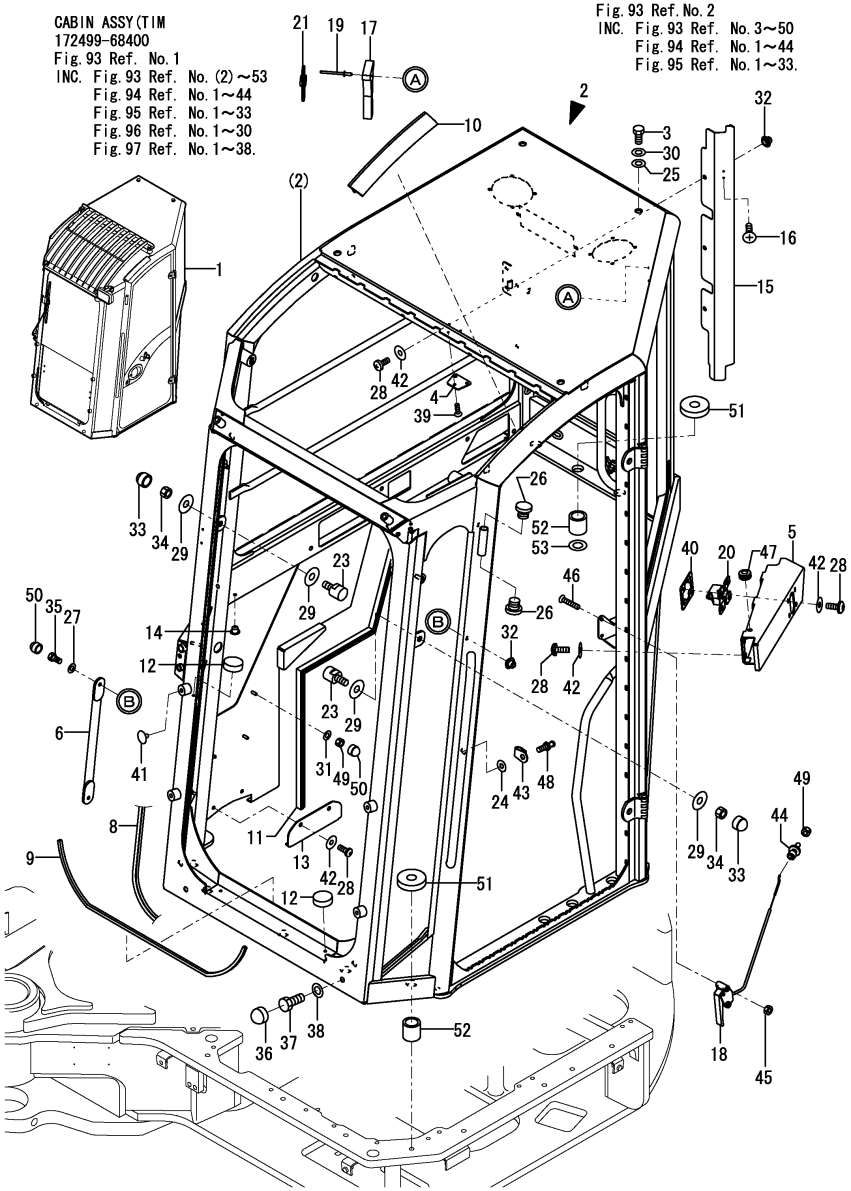

(A)=SV100(US) (D)=
(B)=SV100(AS) (E)=
(C)=SV100(NZ) (F)=

No.	Lev.	Parts No.	Description	Q'ty (A)	(B)	(C)	(D)	(E)	(F)	I	R
54A	1	172499-03270	LABEL,TOPS US	1							2
54B	1	172437-03301	LABEL, MANUAL US	1							2
54B-1	1	172437-03302	LABEL, MANUAL US	1						N	2
	(A=M/#00753)	(B=M/#00753)	(C=M/#00753)								
54C	1	172437-03311	LABEL, SLOPE US	1							2
54C-1	1	172437-03312	LABEL,SLOPE US	1						N	2
	(A=M/#00680)	(B=M/#00680)	(C=M/#00680)								
54D	1	172437-03372	LABEL, NEUTRAL US	1							2
54E	1	172437-03601	LABEL, 2-WAY US	1							2

Remarks
(1)PLEASE USE THIS PART WITH FOLLOWING LABEL AT THE SAME TIME.
REF NO.54A,54B,54C,54D & 54E.
(2)LABEL IS NOT ILLUSTRATED.

N:Old $\xleftarrow[\text{No}]{\text{Yes}}$ New, Q:Old $\xleftarrow[\text{Yes}]{\text{No}}$ New, R:Old $\xleftarrow[\text{Yes}]{\text{Yes}}$ New, S:Old $\xleftarrow[\text{No}]{\text{No}}$ New, W:Add, Z:Discontinued, F:Interchangeable by set, K:Q'ty Change

Copyright (C) YANMAR CO., LTD. All RightsReserved.

Fig.94. TIM CABIN(GLASS)(US)

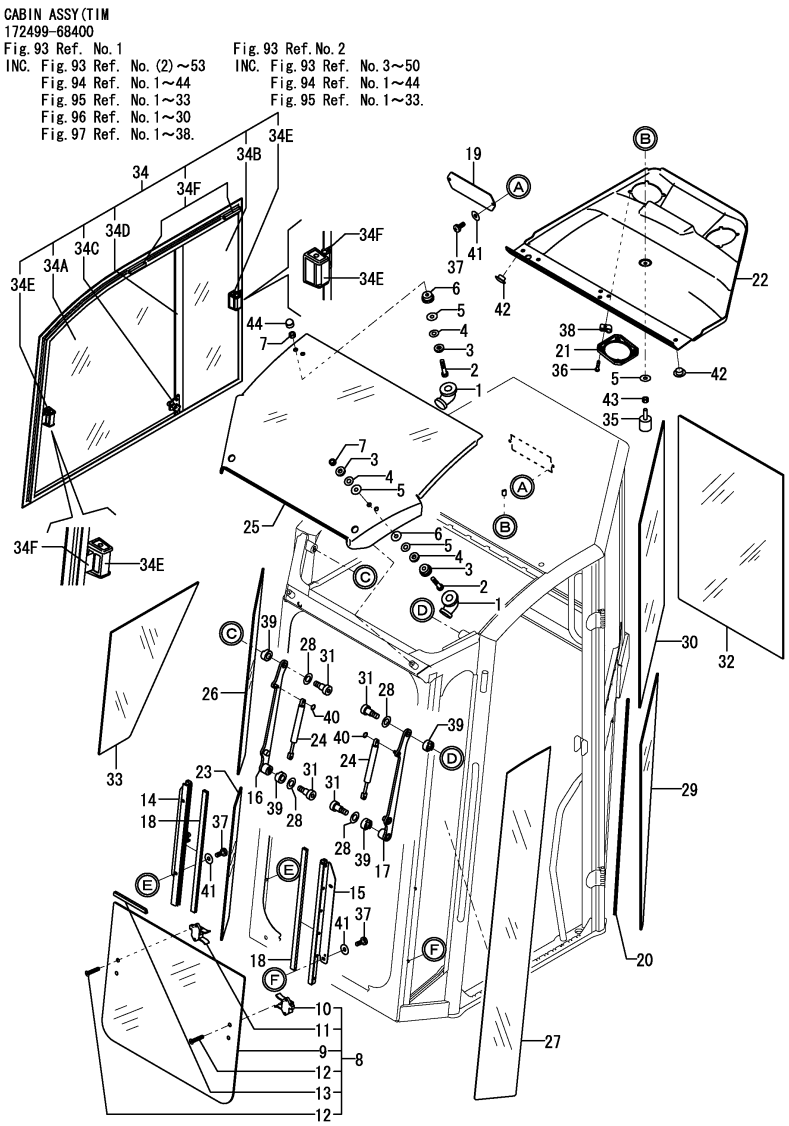

(A)=SV100(US) (D)=
(B)=SV100(AS) (E)=
(C)=SV100(NZ) (F)=

No.	Lev.	Parts No.	Description	Q'ty (A)	(B)	(C)	(D)	(E)	(F)	I	R
1	3	172456-68110	CAP	4							
2	3	172456-68120	SCREW	4							
3	3	172456-68130	WASHER, 7X16X3	6							
4	3	172456-68140	WASHER, 6	6							
5	3	172456-68150	WASHER, 6X18X1	7							
6	3	172456-68160	NUT, SEAL M6	4							
7	3	172456-68170	NUT, BRASS M6	4							
8	3	172A21-68420	GLASS ASSY	1							
9	4	172A21-68430	GLASS	1							
10	4	172456-69550	LOCK L, UNDER GLASS	1							
10-1	4	172456-69551	LOCK, L UNDER GLASS	1						N	
	(A=MXXXXX)										
11	4	172456-69560	LOCK R, UNDER GLASS	1							
11-1	4	172456-69561	LOCK, R UNDER GLASS	1						N	
	(A=MXXXXX)										
12	4	172456-69570	SCREW, M5X25	4							
13	4	172456-69580	SEAL, 590	1							
14	3	172A21-68440	RIGHT LOWER RAIL	1							
15	3	172A21-68450	LEFT LOWER RAIL	1							
16	3	172A21-68470	ARM ASSY	1							
17	3	172A21-68480	ARM ASSY	1							
18	3	172A21-68510	SEAL, NYLON 480	2							
19	3	172A21-68610	PLATE,RADIO	1							
20	3	172A21-68620	SEAL, RUBBER 750	1							
21	3	172A21-68660	GRID, SPEAKER	2							
22	3	172A21-68700	INNER ROOF	1							
23	3	172A21-68720	GLASS	1							
24	3	172A21-68730	SPRING, GAS	2							
25	3	172A21-68760	GLASS, ROOF	1							
26	3	172A21-68770	GLASS	1							
27	3	172A21-68780	GLASS	1							
28	3	172456-68780	WASHER	4							
29	3	172A21-68791	GLASS	1							
30	3	172A21-68800	GLASS	1							
31	3	172456-68800	SCREW	4							
32	3	172A21-68810	GLASS	1							1
33	3	172A21-68820	GLASS	1							
34	3	172A21-68831	GLASS ASSY	1							2
34A	4	172A21-69850	GLASS ASSY	1						W	
	(A=M/#00515)		(B=M/#00515) (C=M/#00515)								
34B	4	172A21-69860	GLASS ASSY	1						W	
	(A=M/#00515)		(B=M/#00515) (C=M/#00515)								
34C	4	172A21-69870	STOPPER	1							
34D	4	172A21-69880	PARTS ASSY	1							
34E	4	172A21-69890	LATCH	2							
34F	4	172A21-69900	CATCH ASSY	1							
35	3	172A21-68890	STOP	1							
36	3	172A21-68910	SCREW, M3.9X19	8							
37	3	172456-68950	SCREW, M6X16	6							
38	3	172A21-68960	CLIP	8							
39	3	172456-69420	SPACER, NYLON	4							

Remarks
(1)PLEASE USE THIS PART WITH FOLLOWING LABEL AT THE SAME TIME.
REF NO.45A & 45B.
(2)PLEASE USE THIS PART WITH FOLLOWING LABEL AT THE SAME TIME.
REF NO.46A & 46B.
(3)LABEL IS NOT ILLUSTRATED.

N:Old $\overset{\text{Yes}}{\underset{\text{No}}{\leftrightarrow}}$ New, Q:Old $\overset{\text{No}}{\underset{\text{Yes}}{\leftrightarrow}}$ New, R:Old $\overset{\text{Yes}}{\underset{\text{Yes}}{\leftrightarrow}}$ New, S:Old $\overset{\text{No}}{\underset{\text{No}}{\leftrightarrow}}$ New, W:Add, Z:Discontinued, F:Interchangeable by set, K:Q'ty Change

++ CONTINUE ++

Copyright (C) YANMAR CO., LTD. All RightsReserved.

Fig.94. TIM CABIN(GLASS)(US)

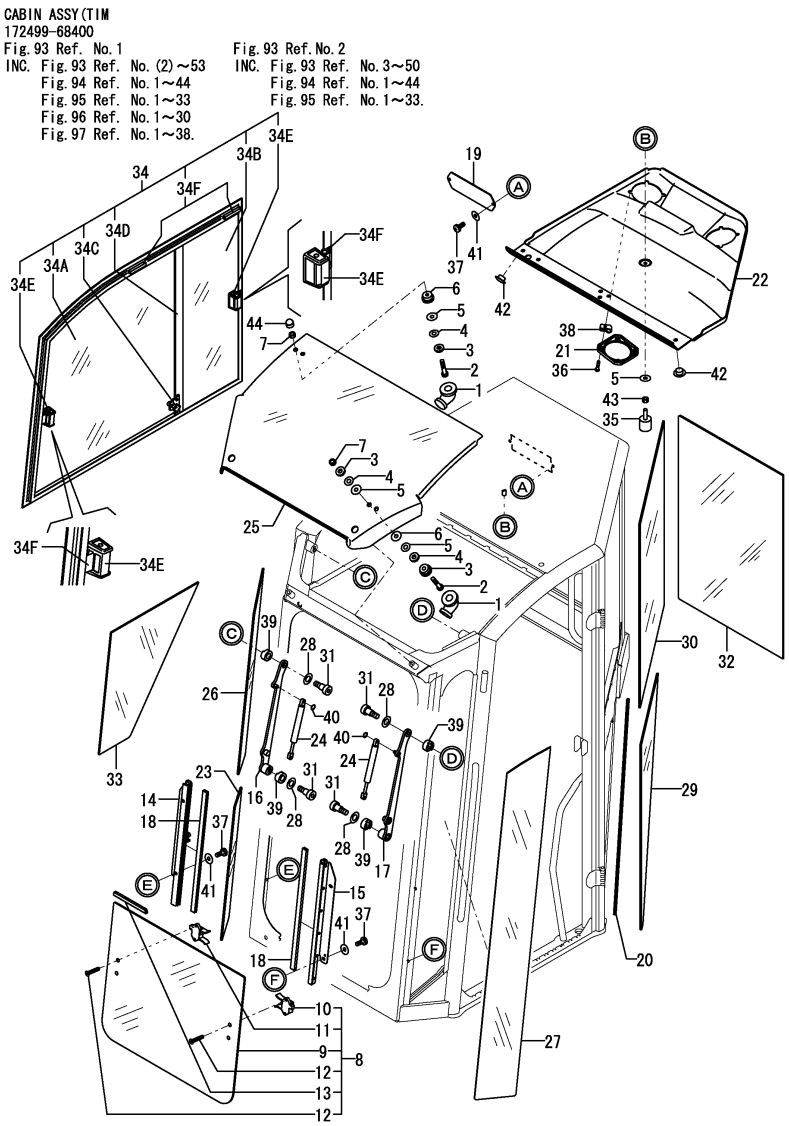

(A)=SV100(US) (D)=
(B)=SV100(AS) (E)=
(C)=SV100(NZ) (F)=

No.	Lev.	Parts No.	Description	Q'ty (A)	(B)	(C)	(D)	(E)	(F)	I	R
40	3	172456-69460	CIRCLIP	4							
41	3	172456-69520	WASHER	6							
42	3	172A21-69580	CAP	5							
43	3	172456-69900	NUT, M6	1							
44	3	172456-69910	CAP, NUT M6	2							
45A	1	172499-03120	LABEL,LIFT Q US	1							3
45A-1	1	172499-03121	LABEL,LIFT Q US	1						N	3
	(A=M/#01148)	(B=M/#01148)	(C=M/#01148)								
45B	1	172472-03241	LABEL, PINUS	1							3
46A	1	172437-03342	LABEL, TRANSPORT US	1							3
46A-1	1	172437-03343	LABEL, TRANSPORT	1						N	3
	(A=M/#00758)	(B=M/#00758)	(C=M/#00758)								
46B	1	172437-03451	LABEL, SEAT BELT	1							3

Remarks
(1)PLEASE USE THIS PART WITH FOLLOWING LABEL AT THE SAME TIME.
REF NO.45A & 45B.
(2)PLEASE USE THIS PART WITH FOLLOWING LABEL AT THE SAME TIME.
REF NO.46A & 46B.
(3)LABEL IS NOT ILLUSTRATED.

N:Old $\xleftarrow[\text{No}]{\text{Yes}}$ New, Q:Old $\xleftarrow[\text{Yes}]{\text{No}}$ New, R:Old $\xleftarrow[\text{Yes}]{\text{Yes}}$ New, S:Old $\xleftarrow[\text{No}]{\text{No}}$ New, W:Add, Z:Discontinued, F:Interchangeable by set, K:Q'ty Change

Copyright (C) YANMAR CO., LTD. All RightsReserved.

Fig.95. TIM CABIN(ELECTRIC)(US)

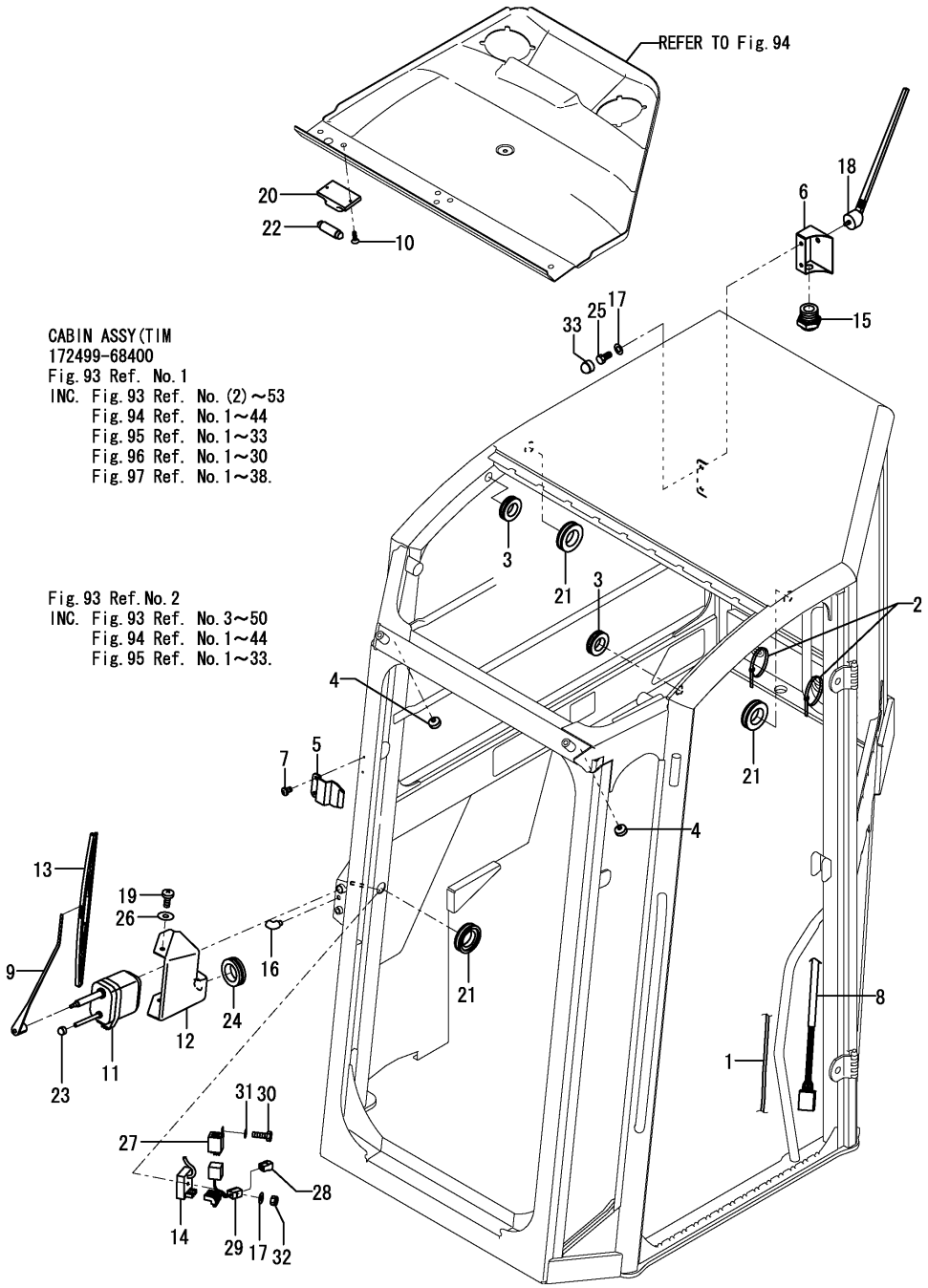

(A)=SV100(US) (D)=
(B)=SV100(AS) (E)=
(C)=SV100(NZ) (F)=

No.	Lev.	Parts No.	Description	Q'ty (A)	(B)	(C)	(D)	(E)	(F)	I	R
1	3	172A21-68500	PIPE, WIPER	1							
2	3	172456-68520	CLAMP, CABLE	8							
3	3	172456-68530	GROMMET, 16X22X3	2							
4	3	172456-68550	STOPPER	2							
5	3	172A21-68560	SUPPORT, WIPER	1							
6	3	172A21-68580	SUPPORT, ANTENNA	1							
7	3	172456-68610	SCREW, M5X8	2							
8	3	172A21-68640	WIRE HARNESS	1							
9	3	172A21-68650	ARM, WIPER	1							
10	3	172456-68650	SCREW, M3.5X12.7	2							
11	3	172A21-68710	WIPER MOTOR	1							
12	3	172A21-68750	COVER	1							
13	3	172A21-68850	WIPER	1							
14	3	172A21-68860	SUPPRESSOR	1							
15	3	172A21-68900	CONNECTOR	1							
16	3	172A21-68930	BEND UNION	1							
17	3	172456-68930	WASHER	3							
18	3	172A21-68950	ANTENNA	1							
19	3	172456-68950	SCREW, M6X16	2							
20	3	172456-68960	ROOM LAMP	1							
21	3	172A21-68970	GROMMET, 20X28X4	3							
22	3	172456-68970	LAMP	1							
23	3	172A21-69030	CAP, NUT M8	1							
24	3	172A21-69050	GROMMET	1							
25	3	172A21-69060	SCREW, M6X16	2							
26	3	172456-69520	WASHER	2							
27	3	172A21-69530	RELAY	1							
28	3	172A21-69540	CONNECTOR	1							
29	3	172A21-69550	HARNESS	1							
30	3	172456-69670	SCREW, M5X15	1							
31	3	172456-69680	WASHER	1							
32	3	172456-69900	NUT, M6	1							
33	3	172456-69910	CAP, NUT M6	2							

N:Old $\frac{\text{Yes}}{\text{No}}$ New, Q:Old $\frac{\text{No}}{\text{Yes}}$ New, R:Old $\frac{\text{Yes}}{\text{Yes}}$ New, S:Old $\frac{\text{No}}{\text{No}}$ New, W:Add, Z:Discontinued, F:Interchangeable by set, K:Q'ty Change

Copyright (C) YANMAR CO., LTD. All RightsReserved.

Fig.96. TIM CABIN(FRONT WINDOW, ROOF GUARD)(US)

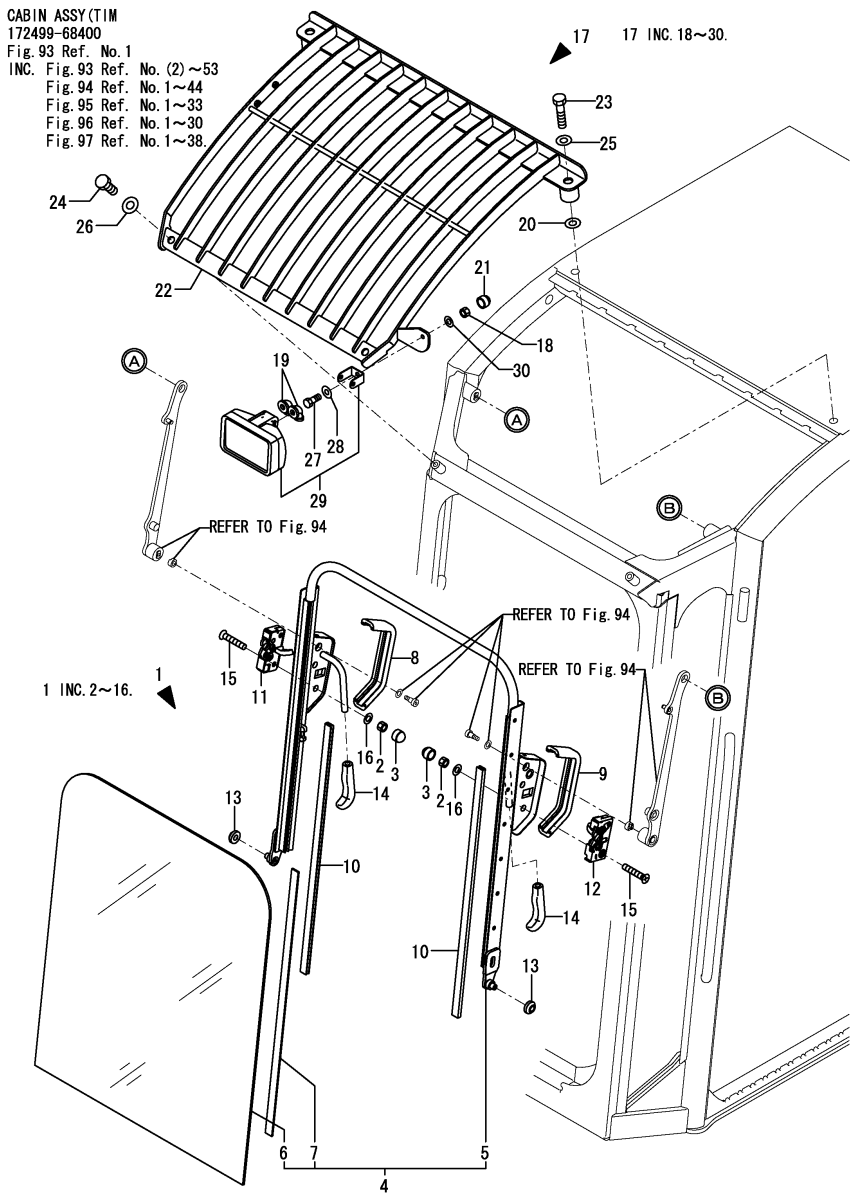

(A)=SV100(US) (D)=
(B)=SV100(AS) (E)=
(C)=SV100(NZ) (F)=

No.	Lev.	Parts No.	Description	Q'ty (A)	(B)	(C)	(D)	(E)	(F)	I	R
1	2	172A21-69070	GLASS ASSY	1							
2	3	172456-68100	NUT, M8	4							
3	3	172A21-69030	CAP, NUT M8	4							
4	3	172A21-69080	GLASS ASSY	1							
5	4	172A21-69090	FRAME,FRONT GLASS	1							
6	4	172A21-69100	GLASS	1							1
7	4	172456-69700	SEAL	1							
8	3	172A21-69110	PROTECTION 260	1							
9	3	172A21-69120	PROTECTION,L 260	1							
10	3	172A21-69130	SEAL, NYLON 630	2							
11	3	172A21-69140	LOCK,RIGHT	1							
12	3	172A21-69150	LOCK,LEFT	1							
13	3	172A21-69160	BUSH	2							
14	3	172456-69380	GRIP	2							
15	3	172456-69840	SCREW, M8X40	4							
16	3	172456-69990	WASHER, 8	4							
17	2	172A21-69170	GUARD ASSY, ROOF	1							
18	3	172456-68100	NUT, M8	1							
19	3	172456-68110	CAP	2							
20	3	172A21-68840	WASHER, 15X30X2	2							
21	3	172A21-69030	CAP, NUT M8	1							
22	3	172A21-69180	GUARD, ROOF	1							
23	3	172A21-69190	BOLT 16X70	2							
24	3	172A21-69200	BOLT 12X20	2							
25	3	172A21-69210	WASHER	2							
26	3	172A21-69220	WASHER	2							
27	3	172A21-69230	BOLT 8X20	1							
28	3	172456-69760	WASHER, 8X19X1.5	1							
29	3	172456-69970	WORK LAMP	1							
30	3	172456-69990	WASHER, 8	1							
31A	1	172437-03551	LABEL, WINDOW US	1							2

Remarks
(1)PLEASE USE THIS PART WITH FOLLOWING LABEL AT THE SAME TIME.
REF NO.31A.
(2)LABEL IS NOT ILLUSTRATED.

N:Old ←Yes/No→ New, Q:Old ←No/Yes→ New, R:Old ←Yes/Yes→ New, S:Old ←No/No→ New, W:Add, Z:Discontinued, F:Interchangeable by set, K:Q'ty Change

Copyright (C) YANMAR CO., LTD. All RightsReserved.

Fig.97. TIM CABIN(DOOR)(US)

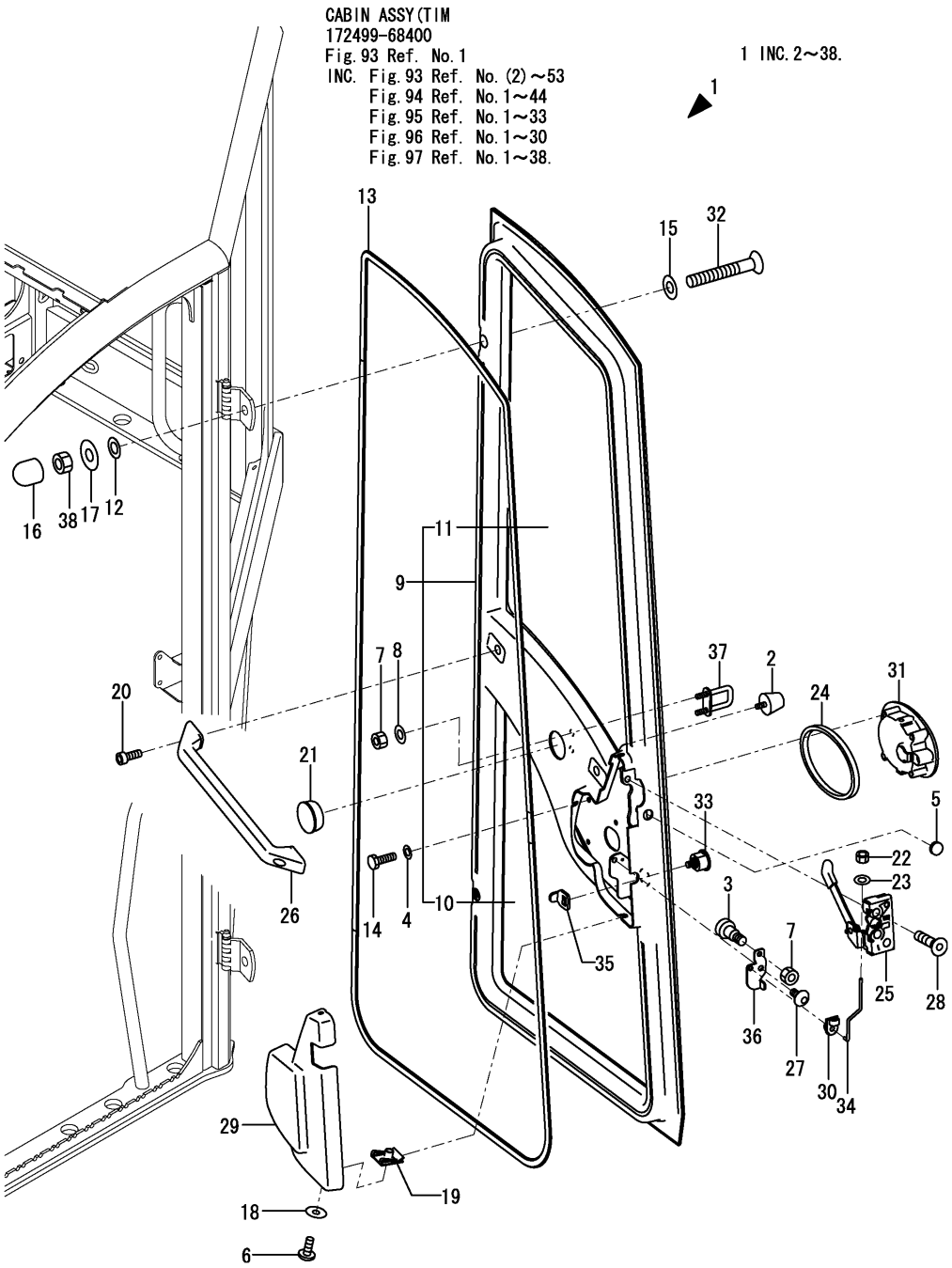

(A)=SV100(US) (D)=
(B)=SV100(AS) (E)=
(C)=SV100(NZ) (F)=

No.	Lev.	Parts No.	Description	Q'ty (A)	(B)	(C)	(D)	(E)	(F)	I	R
1	2	172A21-69241	DOOR ASSY	1							
2	3	172456-68700	STOPPER, DOOR	1							
3	3	172456-68800	SCREW	1							
4	3	172456-68930	WASHER	4							
5	3	172A21-68940	GROMMET	1							
6	3	172456-68950	SCREW, M6X16	3							
7	3	172A21-69040	NUT, SELF LOCK	3							
8	3	172472-69190	WASHER,8.4X16X1.6	2							
9	3	172A21-69251	COVER, DOOR	1							
10	4	172A21-69451	GLASS	1							
11	4	172A21-69461	GLASS	1							
12	3	172456-69260	SEAT, 10.2X18.5X2.5	2							
13	3	172A21-69280	SEAL, RUBBER 4100	1							
14	3	172A21-69330	SCREW, M6X20	4							
15	3	172A21-69360	WASHER	2							
16	3	172A21-69400	CAP, NUT M10	2							
17	3	172A21-69420	WASHER, 11X27X2	2							
18	3	172456-69520	WASHER	3							
19	3	172A21-69650	HOOK	3							
20	3	172A21-69660	SCREW	2							
21	3	172A21-69670	CAP	1							
22	3	172A21-69680	NUT	1							
23	3	172A21-69690	WASHER	1							
24	3	172A21-69700	SEAL	1							
25	3	172A21-69710	LOCK,DOOR	1							
26	3	172A21-69720	HANDLE	1							
27	3	172A21-69730	SCREW	1							
28	3	172A21-69740	SCREW, M8X35	2							
29	3	172A21-69750	COVER, DOOR LOCK	1							
30	3	172A21-69760	CLIP	1							
31	3	172A21-69770	HANDLE	1							
32	3	172A21-69780	SCREW, M10X70	2							
33	3	172456-69780	LOCK, KEY	1							
34	3	172A21-69790	ROD	1							
35	3	172A21-69800	LATCH	1							
36	3	172A21-69810	LATCH	1							
37	3	172A21-69820	HOOK	1							
38	3	172456-69870	NUT, M10	2							

N:Old $\frac{\text{Yes}}{\text{No}}$ New, Q:Old $\frac{\text{No}}{\text{Yes}}$ New, R:Old $\frac{\text{Yes}}{\text{Yes}}$ New, S:Old $\frac{\text{No}}{\text{No}}$ New, W:Add, Z:Discontinued, F:Interchangeable by set, K:Q'ty Change

Copyright (C) YANMAR CO., LTD. All RightsReserved.

Fig.99. TIM CABIN(BODY, ACCESSORY)(AS,NZ)

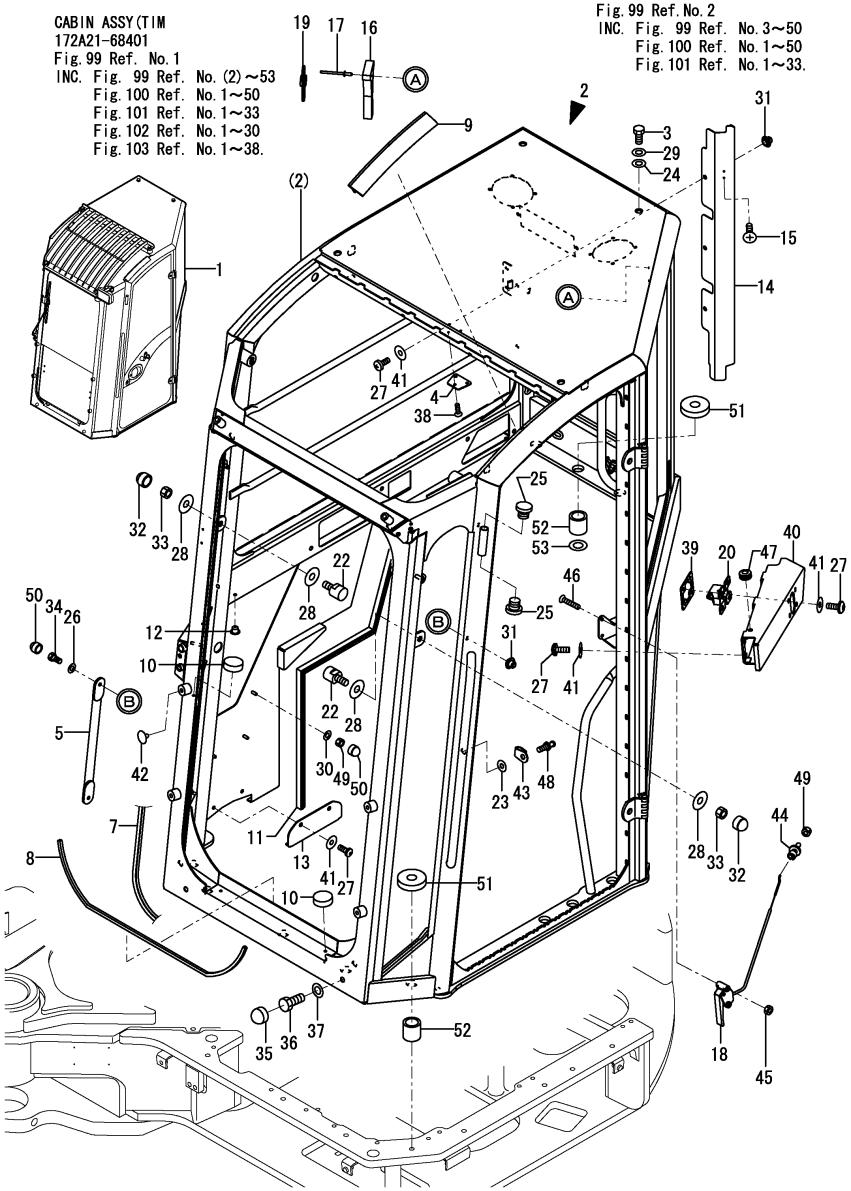

(A)=SV100(US) (D)=
(B)=SV100(AS) (E)=
(C)=SV100(NZ) (F)=

No.	Lev.	Parts No.	Description	Q'ty (A)	(B)	(C)	(D)	(E)	(F)	I	R
1	1	172A21-68401	CABIN ASSY		1	1					
2	2	172A21-68411	BODY ASSY, CABIN		1	1					1
3	3	172456-68180	BOLT 16X30		2	2					
4	3	172456-68250	CAP		1	1					
5	3	172A21-68460	INSIDE HANDLE		1	1					
7	3	172A21-68520	SEAL, RUBBER 3200		1	1					
8	3	172A21-68530	SEAL, RUBBER 680		1	1					
9	3	172A21-68540	ANTI-DROP,230		1	1					
10	3	172456-68550	STOPPER		4	4					
11	3	172A21-68550	SEAL, RUBBER 2550		1	1					
12	3	172456-68570	PLUG		2	2					
13	3	172A21-68570	TRAP		1	1					
14	3	172A21-68600	COVER		1	1					
15	3	172456-68650	SCREW, M3.5X12.7		2	2					
16	3	172456-68660	HAMMER		1	1					
17	3	172456-68670	RIVET 3.2X8		4	4					
18	3	172A21-68670	UNLOCK LEVER		1	1					
19	3	172456-68680	SEAL, BAND		1	1					
20	3	172A21-68680	LOCK,DOOR		1	1					
22	3	172A21-68740	LOCK,WINDSHIELD		2	2					
23	3	172456-68750	WASHER, 12X30X2		1	1					
24	3	172A21-68840	WASHER, 15X30X2		2	2					
25	3	172A21-68880	CAP		2	2					
26	3	172456-68930	WASHER		2	2					
27	3	172456-68950	SCREW, M6X16		15	15					
28	3	172A21-68980	WASHER, 9X25X2		4	4					
29	3	172A21-68990	WASHER		2	2					
30	3	172A21-69000	WASHER		3	3					
31	3	172A21-69020	NUT, M6		5	5					
32	3	172A21-69030	CAP, NUT M8		2	2					
33	3	172A21-69040	NUT, SELF LOCK		2	2					
34	3	172A21-69060	SCREW, M6X16		2	2					
35	3	172456-69240	CAP, NUT		2	2					
36	3	172456-69250	SCREW, M10X16		2	2					
37	3	172456-69260	SEAT, 10.2X18.5X2.5		2	2					
38	3	172456-69310	SCREW, M4.8X16		3	3					
39	3	172A21-69500	RETAINER		1	1					
40	3	172A21-69510	BRACKET		1	1					
41	3	172456-69520	WASHER		15	15					
42	3	172A21-69520	PLUG		4	4					
43	3	172A21-69560	PROTECTION		1	1					
44	3	172A21-69570	CABLE		1	1					
45	3	172A21-69590	NUT, M5		2	2					
46	3	172A21-69600	SCREW, M5X30		2	2					
47	3	172A21-69610	GROMMET		1	1					
48	3	172A21-69620	CATCH, DOOR		1	1					
49	3	172456-69900	NUT, M6		4	4					
50	3	172456-69910	CAP, NUT M6		5	5					
51	2	172A21-69430	WASHER, 36X12X8		11	11					
52	2	172A21-69440	SPACER, 22X16X22		11	11					
53	2	172456-69930	WASHER 12X22.5X2.5		3	3					

Remarks
(1)PLEASE USE THIS PART WITH FOLLOWING LABEL AT THE SAME TIME.
REF NO.54A,54B,54C,54D & 54E.
(2)LABEL IS NOT ILLUSTRATED.

N:Old $\overset{\text{Yes}}{\underset{\text{No}}{\leftrightarrow}}$ New, Q:Old $\overset{\text{No}}{\underset{\text{Yes}}{\leftrightarrow}}$ New, R:Old $\overset{\text{Yes}}{\underset{\text{Yes}}{\leftrightarrow}}$ New, S:Old $\overset{\text{No}}{\underset{\text{No}}{\leftrightarrow}}$ New, W:Add, Z:Discontinued, F:Interchangeable by set, K:Q'ty Change

++ CONTINUE ++

Copyright (C) YANMAR CO., LTD. All RightsReserved.

Fig.99. TIM CABIN(BODY, ACCESSORY)(AS,NZ)

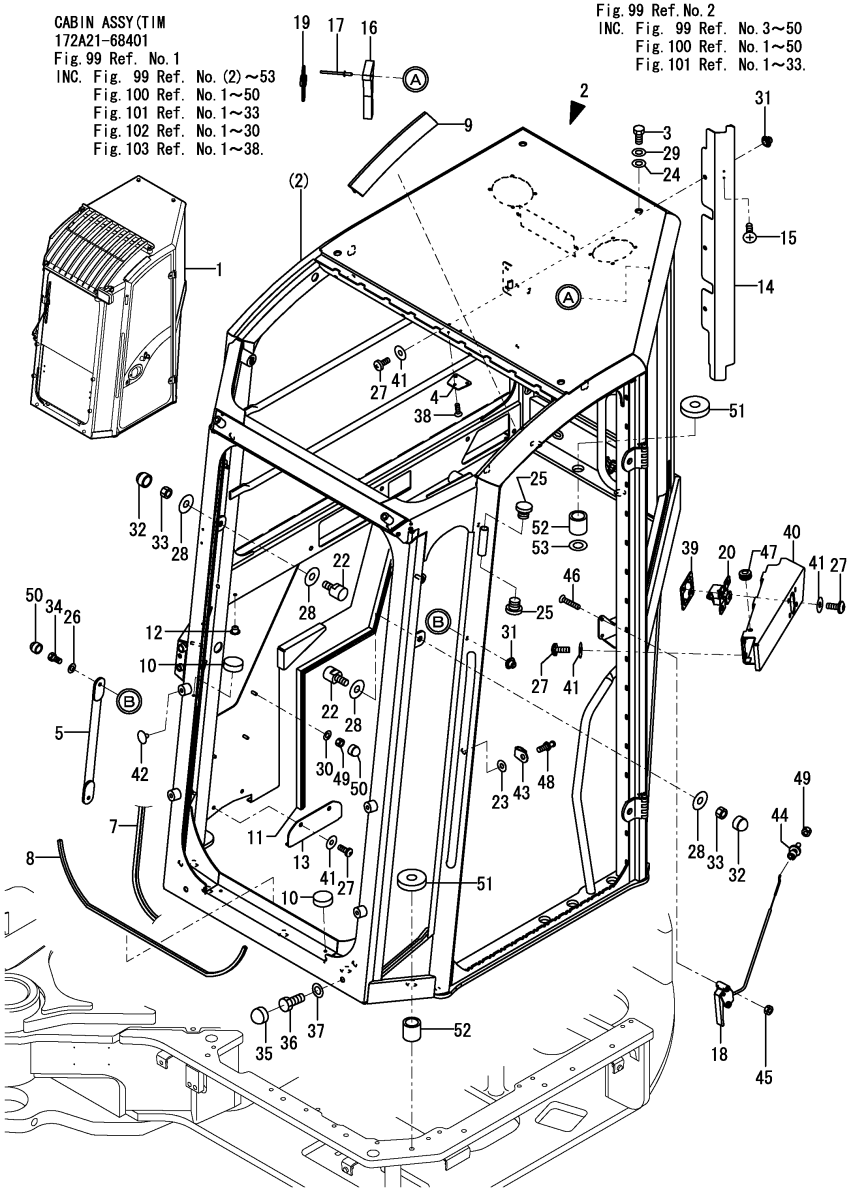

(A)=SV100(US) (D)=
(B)=SV100(AS) (E)=
(C)=SV100(NZ) (F)=

No.	Lev.	Parts No.	Description	Q'ty (A)	(B)	(C)	(D)	(E)	(F)	I	R
54A	1	172499-03270	LABEL,TOPS US		1	1					2
54B	1	172437-03302	LABEL, MANUAL US		1	1					2
54C	1	172437-03312	LABEL,SLOPE US		1	1					2
54D	1	172437-03372	LABEL, NEUTRAL US		1	1					2
54E	1	172437-03601	LABEL, 2-WAY US		1	1					2

Remarks
(1)PLEASE USE THIS PART WITH FOLLOWING LABEL AT THE SAME TIME.
REF NO.54A,54B,54C,54D & 54E.
(2)LABEL IS NOT ILLUSTRATED.

N:Old $\overset{\text{Yes}}{\underset{\text{No}}{\leftrightarrow}}$ New, Q:Old $\overset{\text{No}}{\underset{\text{Yes}}{\leftrightarrow}}$ New, R:Old $\overset{\text{Yes}}{\underset{\text{Yes}}{\leftrightarrow}}$ New, S:Old $\overset{\text{No}}{\underset{\text{No}}{\leftrightarrow}}$ New, W:Add, Z:Discontinued, F:Interchangeable by set, K:Q'ty Change

Copyright (C) YANMAR CO., LTD. All RightsReserved.

Fig.100. TIM CABIN(GLASS)(AS,NZ)

(A)=SV100(US) (D)=
(B)=SV100(AS) (E)=
(C)=SV100(NZ) (F)=

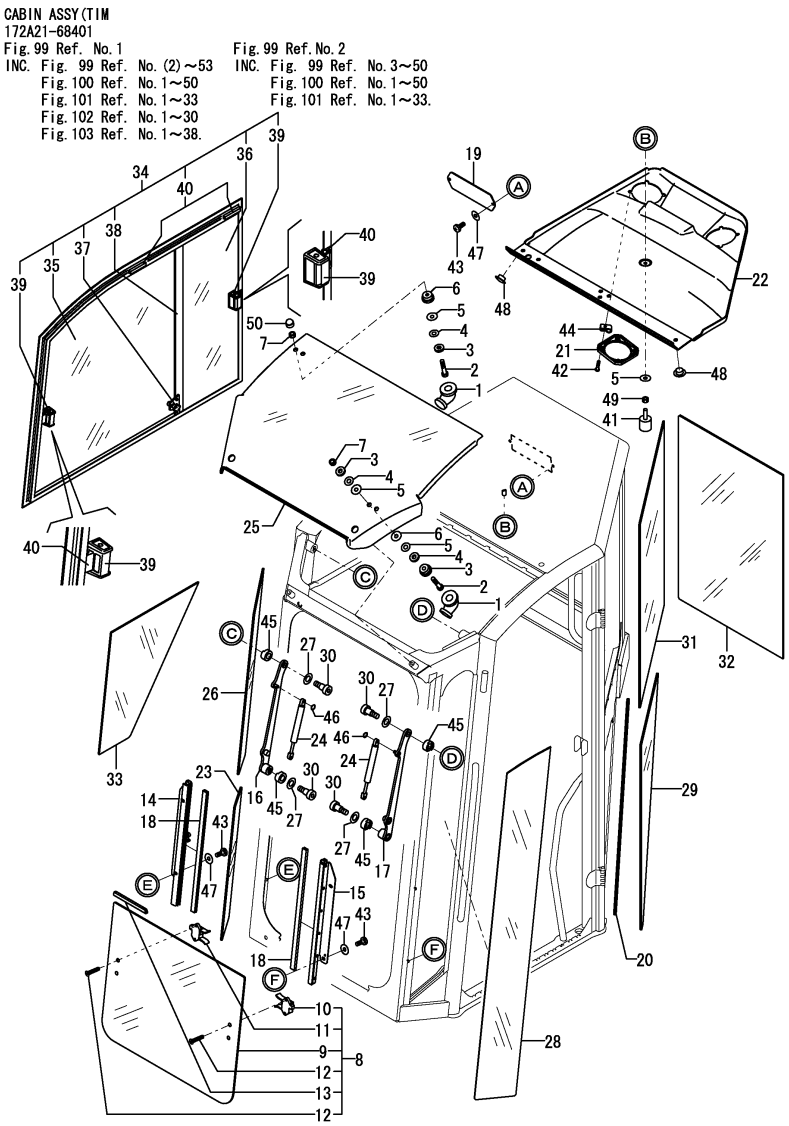

No.	Lev.	Parts No.	Description	Q'ty (A)	(B)	(C)	(D)	(E)	(F)	I	R
1	3	172456-68110	CAP		4	4					
2	3	172456-68120	SCREW		4	4					
3	3	172456-68130	WASHER, 7X16X3		6	6					
4	3	172456-68140	WASHER, 6		6	6					
5	3	172456-68150	WASHER, 6X18X1		7	7					
6	3	172456-68160	NUT, SEAL M6		4	4					
7	3	172456-68170	NUT, BRASS M6		4	4					
8	3	172A21-68420	GLASS ASSY		1	1					
9	4	172A21-68430	GLASS		1	1					
10	4	172456-69550	LOCK L, UNDER GLASS		1	1					
10-1	4	172456-69551	LOCK, L UNDER GLASS (B=MXXXXX) (C=MXXXXX)		1	1				N	
11	4	172456-69560	LOCK R, UNDER GLASS		1	1					
11-1	4	172456-69561	LOCK, R UNDER GLASS (B=MXXXXX) (C=MXXXXX)		1	1				N	
12	4	172456-69570	SCREW, M5X25		4	4					
13	4	172456-69580	SEAL, 590		1	1					
14	3	172A21-68440	RIGHT LOWER RAIL		1	1					
15	3	172A21-68450	LEFT LOWER RAIL		1	1					
16	3	172A21-68470	ARM ASSY		1	1					
17	3	172A21-68480	ARM ASSY		1	1					
18	3	172A21-68510	SEAL, NYLON 480		2	2					
19	3	172A21-68610	PLATE,RADIO		1	1					
20	3	172A21-68620	SEAL, RUBBER 750		1	1					
21	3	172A21-68660	GRID, SPEAKER		2	2					
22	3	172A21-68700	INNER ROOF		1	1					
23	3	172A21-68720	GLASS		1	1					
24	3	172A21-68730	SPRING, GAS		2	2					
25	3	172A21-68760	GLASS, ROOF		1	1					
26	3	172A21-68770	GLASS		1	1					
27	3	172456-68780	WASHER		4	4					
28	3	172A21-68780	GLASS		1	1					
29	3	172A21-68791	GLASS		1	1					
30	3	172456-68800	SCREW		4	4					
31	3	172A21-68800	GLASS		1	1					
32	3	172A21-68810	GLASS		1	1					1
33	3	172A21-68820	GLASS		1	1					
34	3	172A21-68831	GLASS ASSY		1	1					2
35	4	172A21-69850	GLASS ASSY		1	1					
36	4	172A21-69860	GLASS ASSY		1	1					
37	4	172A21-69870	STOPPER		1	1					
38	4	172A21-69880	PARTS ASSY		1	1					
39	4	172A21-69890	LATCH		2	2					
40	4	172A21-69900	CATCH ASSY		1	1					
41	3	172A21-68890	STOP		1	1					
42	3	172A21-68910	SCREW, M3.9X19		8	8					
43	3	172456-68950	SCREW, M6X16		6	6					
44	3	172A21-68960	CLIP		8	8					
45	3	172456-69420	SPACER, NYLON		4	4					
46	3	172456-69460	CIRCLIP		4	4					
47	3	172456-69520	WASHER		6	6					

Remarks
(1)PLEASE USE THIS PART WITH FOLLOWING LABEL AT THE SAME TIME.
REF NO.51A & 51B.
(2)PLEASE USE THIS PART WITH FOLLOWING LABEL AT THE SAME TIME.
REF NO.52A & 52B.
(3)LABEL IS NOT ILLUSTRATED.

N:Old ←Yes/No→ New, Q:Old ←No/Yes→ New, R:Old ←Yes/Yes→ New, S:Old ←No/No→ New, W:Add, Z:Discontinued, F:Interchangeable by set, K:Q'ty Change

++ CONTINUE ++

Copyright (C) YANMAR CO., LTD. All RightsReserved.

Fig.100. TIM CABIN(GLASS)(AS,NZ)

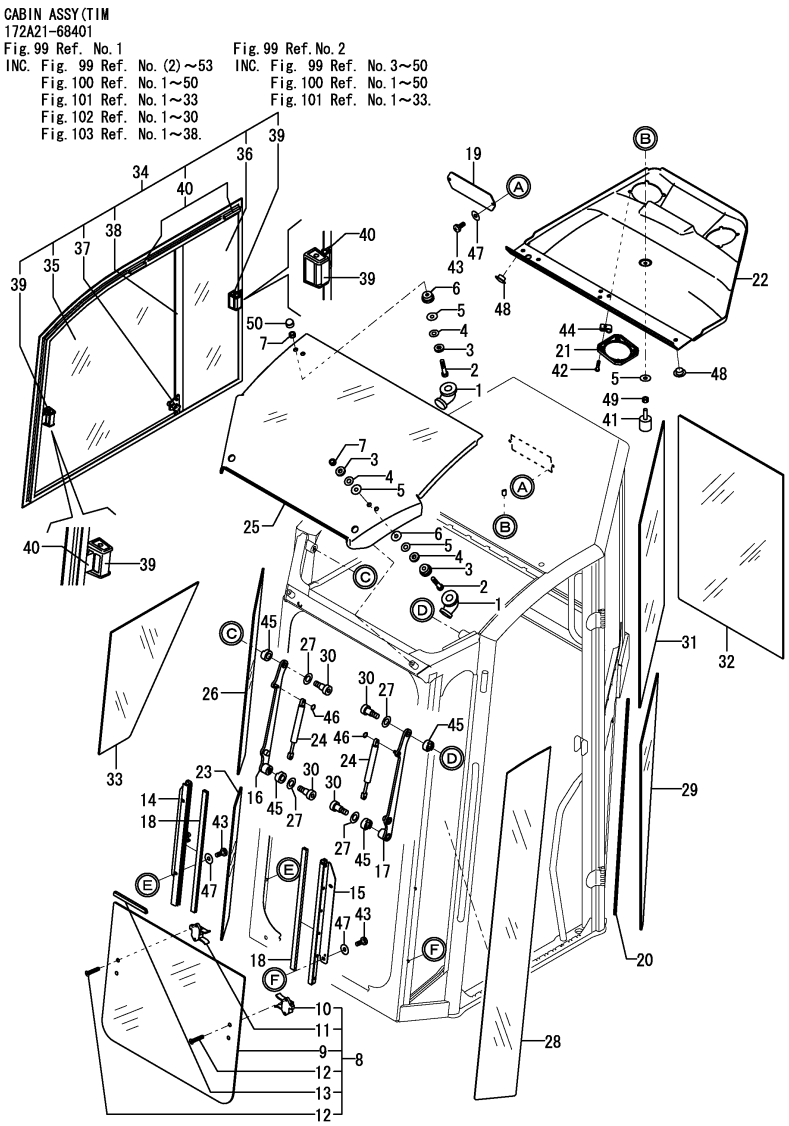

(A)=SV100(US) (D)=
(B)=SV100(AS) (E)=
(C)=SV100(NZ) (F)=

No.	Lev.	Parts No.	Description	Q'ty (A)	(B)	(C)	(D)	(E)	(F)	I	R
48	3	172A21-69580	CAP		5	5					
49	3	172456-69900	NUT, M6		1	1					
50	3	172456-69910	CAP, NUT M6		2	2					
51A	1	172499-03121	LABEL,LIFT Q US		1	1					3
51B	1	172472-03241	LABEL, PINUS		1	1					3
52A	1	172437-03343	LABEL, TRANSPORT		1	1					3
52B	1	172437-03451	LABEL, SEAT BELT		1	1					3

Remarks
(1)PLEASE USE THIS PART WITH FOLLOWING LABEL AT THE SAME TIME.
REF NO.51A & 51B.
(2)PLEASE USE THIS PART WITH FOLLOWING LABEL AT THE SAME TIME.
REF NO.52A & 52B.
(3)LABEL IS NOT ILLUSTRATED.

N:Old $\overset{\text{Yes}}{\underset{\text{No}}{\leftrightarrows}}$ New, Q:Old $\overset{\text{No}}{\underset{\text{Yes}}{\leftrightarrows}}$ New, R:Old $\overset{\text{Yes}}{\underset{\text{Yes}}{\leftrightarrows}}$ New, S:Old $\overset{\text{No}}{\underset{\text{No}}{\leftrightarrows}}$ New, W:Add, Z:Discontinued, F:Interchangeable by set, K:Q'ty Change

Copyright (C) YANMAR CO., LTD. All RightsReserved.

Fig.101. TIM CABIN(ELECTRIC)(AS,NZ)

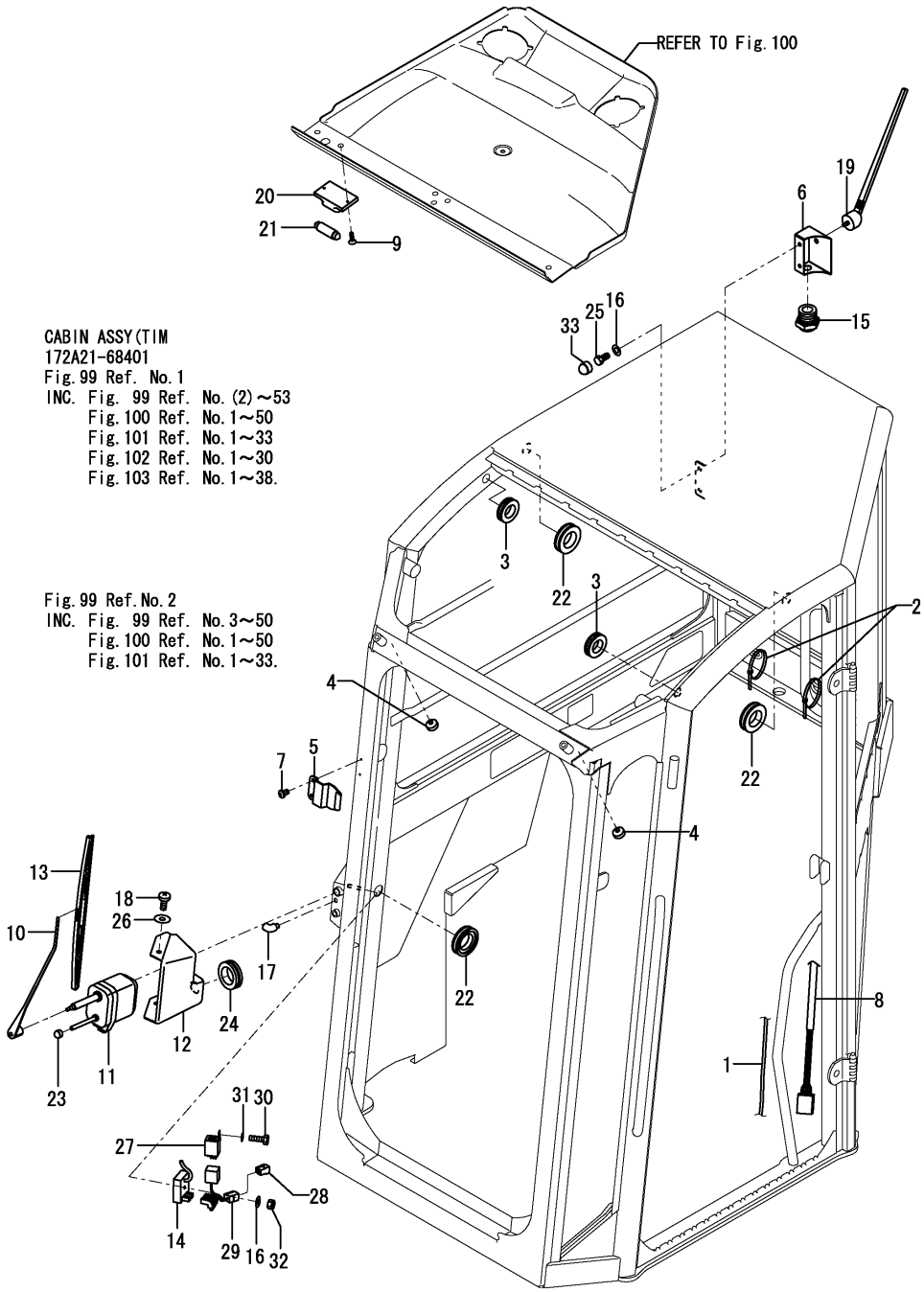

(A)=SV100(US) (D)=
(B)=SV100(AS) (E)=
(C)=SV100(NZ) (F)=

No.	Lev.	Parts No.	Description	Q'ty (A)	(B)	(C)	(D)	(E)	(F)	I	R
1	3	172A21-68500	PIPE, WIPER		1	1					
2	3	172456-68520	CLAMP, CABLE		8	8					
3	3	172456-68530	GROMMET, 16X22X3		2	2					
4	3	172456-68550	STOPPER		2	2					
5	3	172A21-68560	SUPPORT, WIPER		1	1					
6	3	172A21-68580	SUPPORT, ANTENNA		1	1					
7	3	172456-68610	SCREW, M5X8		2	2					
8	3	172A21-68640	WIRE HARNESS		1	1					
9	3	172456-68650	SCREW, M3.5X12.7		2	2					
10	3	172A21-68650	SWITCH ASSY, WIPER		1	1					
11	3	172A21-68710	WIPER MOTOR		1	1					
12	3	172A21-68750	COVER		1	1					
13	3	172A21-68850	WIPER		1	1					
14	3	172A21-68860	SUPPRESSOR		1	1					
15	3	172A21-68900	CONNECTOR		1	1					
16	3	172456-68930	WASHER		3	3					
17	3	172A21-68930	BEND UNION		1	1					
18	3	172456-68950	SCREW, M6X16		2	2					
19	3	172A21-68950	ANTENNA		1	1					
20	3	172456-68960	ROOM LAMP		1	1					
21	3	172456-68970	LAMP		1	1					
22	3	172A21-68970	GROMMET, 20X28X4		3	3					
23	3	172A21-69030	CAP, NUT M8		1	1					
24	3	172A21-69050	GROMMET		1	1					
25	3	172A21-69060	SCREW, M6X16		2	2					
26	3	172456-69520	WASHER		2	2					
27	3	172A21-69530	RELAY		1	1					
28	3	172A21-69540	CONNECTOR		1	1					
29	3	172A21-69550	HARNESS		1	1					
30	3	172456-69670	SCREW, M5X15		1	1					
31	3	172456-69680	WASHER		1	1					
32	3	172456-69900	NUT, M6		1	1					
33	3	172456-69910	CAP, NUT M6		2	2					

N:Old ◄Yes/No► New, Q:Old ◄No/Yes► New, R:Old ◄Yes/Yes► New, S:Old ◄No/No► New, W:Add, Z:Discontinued, F:Interchangeable by set, K:Q'ty Change

Copyright (C) YANMAR CO., LTD. All RightsReserved.

Fig.102. TIM CABIN(FRONT WINDOW, ROOF GUARD)(AS,NZ)

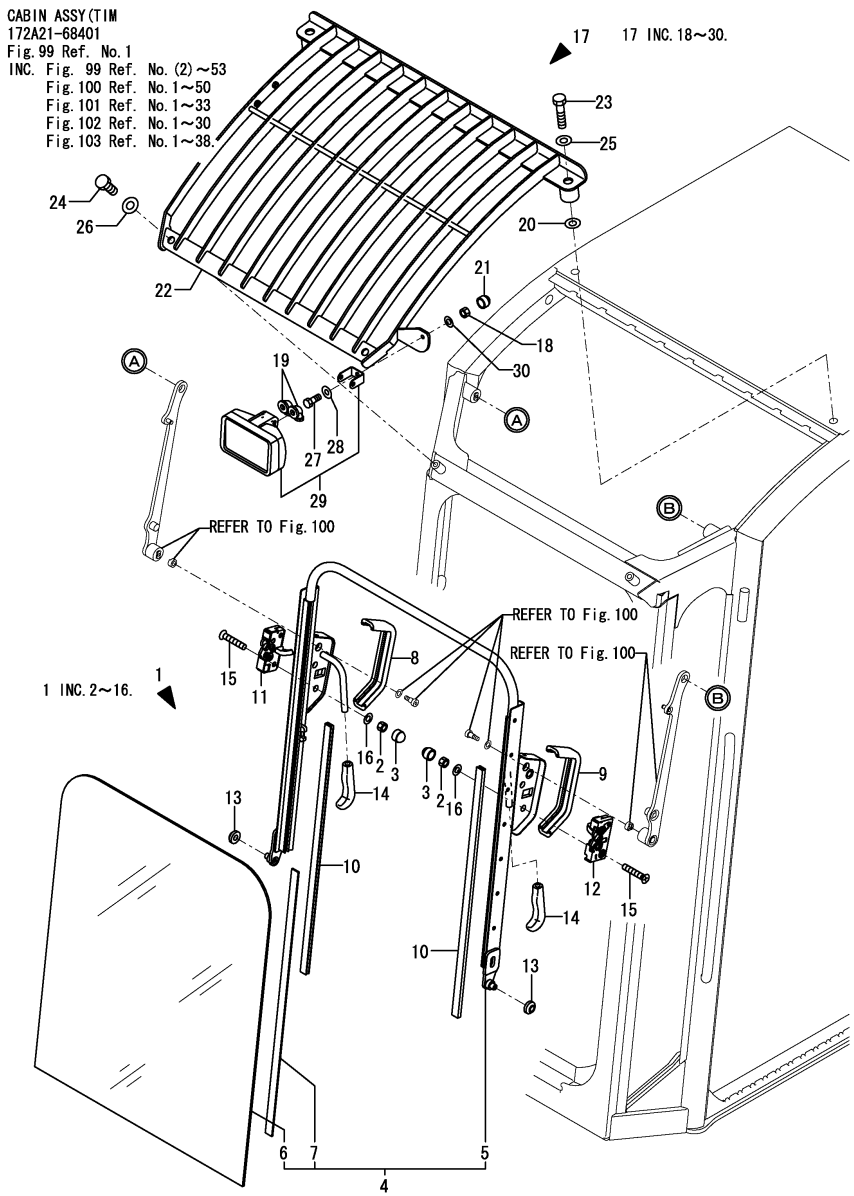

(A)=SV100(US) (D)=
(B)=SV100(AS) (E)=
(C)=SV100(NZ) (F)=

No.	Lev.	Parts No.	Description	Q'ty (A)	(B)	(C)	(D)	(E)	(F)	I	R
1	2	172A21-69070	GLASS ASSY		1	1					
2	3	172456-68100	NUT, M8		4	4					
3	3	172A21-69030	CAP, NUT M8		4	4					
4	3	172A21-69080	GLASS ASSY		1	1					
5	4	172A21-69090	FRAME,FRONT GLASS		1	1					
6	4	172A21-69100	GLASS		1	1					1
7	4	172456-69700	SEAL		1	1					
8	3	172A21-69110	PROTECTION 260		1	1					
9	3	172A21-69120	PROTECTION,L 260		1	1					
10	3	172A21-69130	SEAL, NYLON 630		2	2					
11	3	172A21-69140	LOCK,RIGHT		1	1					
12	3	172A21-69150	LOCK,LEFT		1	1					
13	3	172A21-69160	BUSH		2	2					
14	3	172456-69380	GRIP		2	2					
15	3	172456-69840	SCREW, M8X40		4	4					
16	3	172456-69990	WASHER, 8		4	4					
17	2	172A21-69170	GUARD ASSY, ROOF		1	1					
18	3	172456-68100	NUT, M8		1	1					
19	3	172456-68110	CAP		2	2					
20	3	172A21-68840	WASHER, 15X30X2		2	2					
21	3	172A21-69030	CAP, NUT M8		1	1					
22	3	172A21-69180	GUARD, ROOF		1	1					
23	3	172A21-69190	BOLT 16X70		2	2					
24	3	172A21-69200	BOLT 12X20		2	2					
25	3	172A21-69210	WASHER		2	2					
26	3	172A21-69220	WASHER		2	2					
27	3	172A21-69230	BOLT 8X20		1	1					
28	3	172456-69760	WASHER, 8X19X1.5		1	1					
29	3	172456-69970	WORK LAMP		1	1					
30	3	172456-69990	WASHER, 8		1	1					
31A	1	172437-03551	LABEL, WINDOW US		1	1					2

Remarks
(1)PLEASE USE THIS PART WITH FOLLOWING LABEL AT THE SAME TIME.
REF NO.31A.
(2)LABEL IS NOT ILLUSTRATED.

N:Old ←Yes/No→ New, Q:Old ←No/Yes→ New, R:Old ←Yes/Yes→ New, S:Old ←No/No→ New, W:Add, Z:Discontinued, F:Interchangeable by set, K:Q'ty Change

Copyright (C) YANMAR CO., LTD. All RightsReserved.

Fig.103. TIM CABIN(DOOR)(AS,NZ)

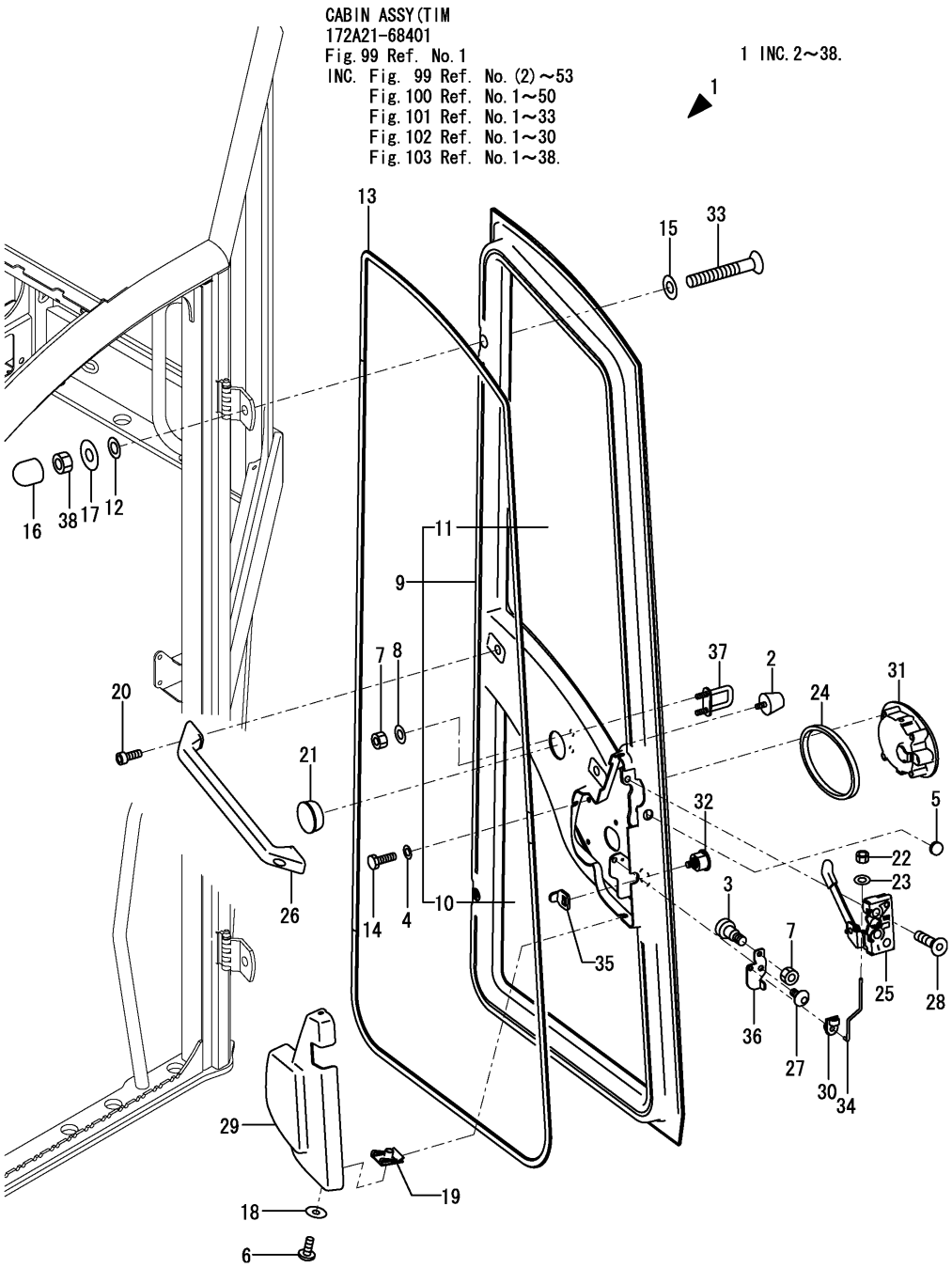

(A)=SV100(US) (D)=
(B)=SV100(AS) (E)=
(C)=SV100(NZ) (F)=

No.	Lev.	Parts No.	Description	Q'ty (A)	(B)	(C)	(D)	(E)	(F)	I	R
1	2	172A21-69241	DOOR ASSY		1	1					
2	3	172456-68700	STOPPER, DOOR		1	1					
3	3	172456-68800	SCREW		1	1					
4	3	172456-68930	WASHER		4	4					
5	3	172A21-68940	GROMMET		1	1					
6	3	172456-68950	SCREW, M6X16		3	3					
7	3	172A21-69040	NUT, SELF LOCK		3	3					
8	3	172472-69190	WASHER,8.4X16X1.6		2	2					
9	3	172A21-69251	COVER, DOOR		1	1					
10	4	172A21-69451	GLASS		1	1					
11	4	172A21-69461	GLASS		1	1					
12	3	172456-69260	SEAT, 10.2X18.5X2.5		2	2					
13	3	172A21-69280	SEAL, RUBBER 4100		1	1					
14	3	172A21-69330	SCREW, M6X20		4	4					
15	3	172A21-69360	WASHER		2	2					
16	3	172A21-69400	CAP, NUT M10		2	2					
17	3	172A21-69420	WASHER, 11X27X2		2	2					
18	3	172456-69520	WASHER		3	3					
19	3	172A21-69650	HOOK		3	3					
20	3	172A21-69660	SCREW		2	2					
21	3	172A21-69670	CAP		1	1					
22	3	172A21-69680	NUT		1	1					
23	3	172A21-69690	WASHER		1	1					
24	3	172A21-69700	SEAL		1	1					
25	3	172A21-69710	LOCK,DOOR		1	1					
26	3	172A21-69720	HANDLE		1	1					
27	3	172A21-69730	SCREW		1	1					
28	3	172A21-69740	SCREW, M8X35		2	2					
29	3	172A21-69750	COVER, DOOR LOCK		1	1					
30	3	172A21-69760	CLIP		1	1					
31	3	172A21-69770	HANDLE		1	1					
32	3	172456-69780	LOCK, KEY		1	1					
33	3	172A21-69780	SCREW, M10X70		2	2					
34	3	172A21-69790	ROD		1	1					
35	3	172A21-69800	LATCH		1	1					
36	3	172A21-69810	LATCH		1	1					
37	3	172A21-69820	HOOK		1	1					
38	3	172456-69870	NUT, M10		2	2					

N:Old ←Yes/No→ New, Q:Old ←No/Yes→ New, R:Old ←Yes/Yes→ New, S:Old ←No/No→ New, W:Add, Z:Discontinued, F:Interchangeable by set, K:Q'ty Change

Copyright (C) YANMAR CO., LTD. All RightsReserved.

Fig.104. CA LABEL KIT(OPTIONAL)

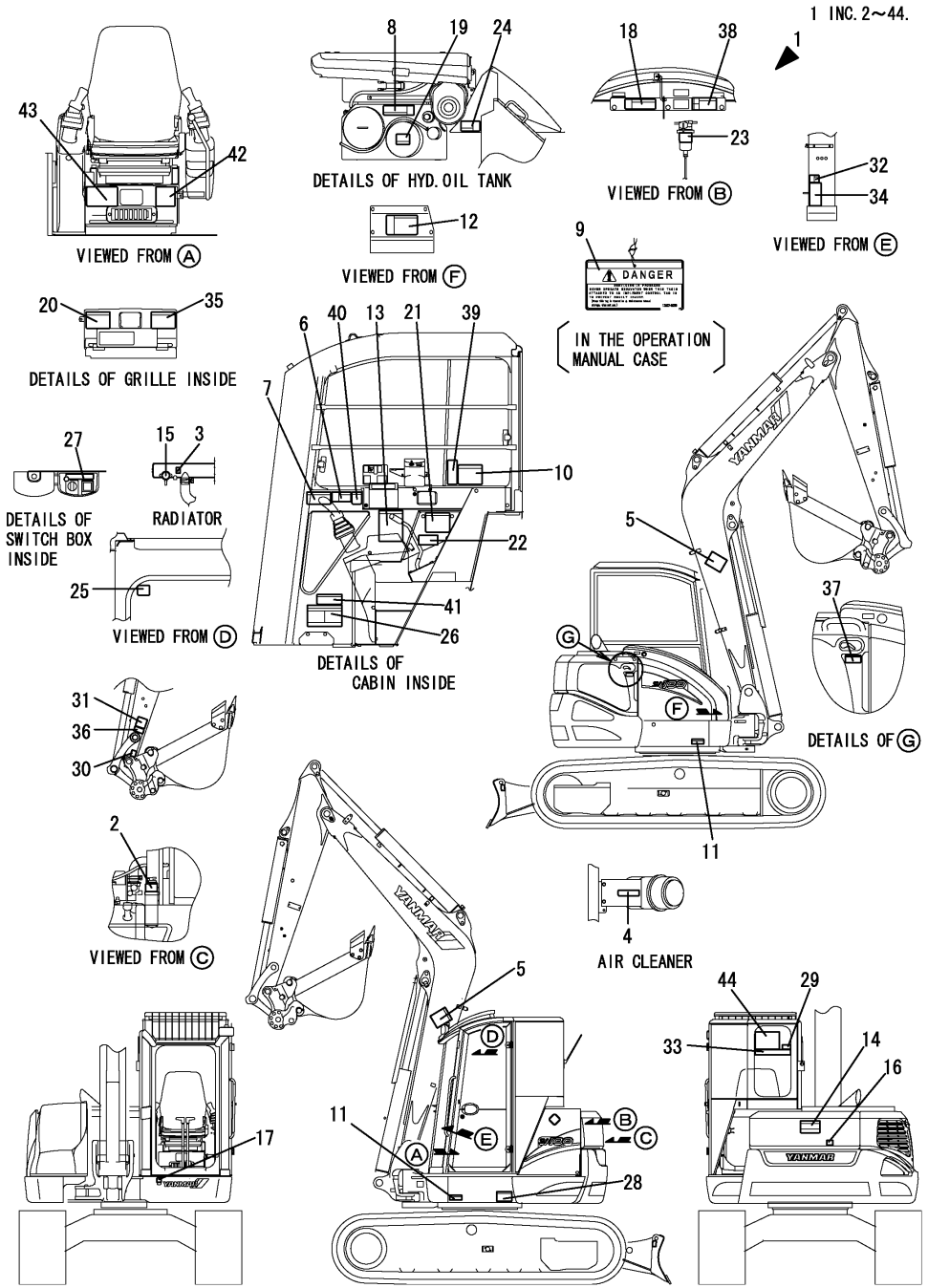

(A)=SV100(US) (B)=SV100(AS) (C)=SV100(NZ) (D)= (E)= (F)=

No.	Lev.	Parts No.	Description	Q'ty (A)	(B)	(C)	(D)	(E)	(F)	I	R
1	1	172499-03020	LABEL KIT (SV100) CA	1							
2	2	172A37-03150	LABEL,SUB-TANK CA	1							
3	2	172A37-03160	LABEL,ANTI-FREEZE CA	1							
4	2	172A37-03180	LABEL J, AIR CLEANER	1							
5	2	172A37-03200	LABEL,BOOM CA	2							
6	2	172A37-03231	LABEL,MANUAL CA.	1							
7	2	172A37-03241	LABEL,SLOPE CA.	1							
8	2	172A37-03250	LABEL,RESERVOIR CA	1							
9	2	172469-03261	TAG ASSY, SERVICING	1							
10	2	172A37-03271	LABEL,TRANSPORT CA.	1							
11	2	172A37-03280	LABEL,GREASE CYL CA	2							
12	2	172A37-03290	LABEL,BATTERY CA	1							
13	2	172A37-03300	LABEL,NEWTRAL CA	1							
14	2	172A37-03310	LABEL,SWING AREA CA	1							
15	2	172469-03320	LABEL,RADIATOR CAP	1							
16	2	172A37-03330	LABEL,ENGINE COVER	1							
17	2	172478-03350	LABEL,GREASE	1							
18	2	172A37-03350	LABEL,SILENCER CA	1							
19	2	172469-03360	LABEL,OIL	1							
20	2	172478-03360	LABEL,GREASING	1							
21	2	172A37-03360	LABEL,STERRING CA	1							
22	2	172A37-03400	LABEL,LEVER LOCK CA	1							
23	2	172A07-03410	LABEL,WATER DRAIN	1							
24	2	172A37-03410	LABEL,RADIATOR CA	1							
25	2	172A37-03420	LABEL,WINDOW CA	1							
26	2	172A37-03430	LABEL,2 WAY CA	1							
27	2	172469-03480	LABEL,SWITCH	1							
28	2	172A37-03500	LABEL,SUPPORT CA	1							
29	2	172A37-03520	LABEL,PIN CA	1							
30	2	172A37-03530	LABEL,FINGER CA	1							
31	2	172469-03540	LABEL,OPERATION PIN	1							
32	2	172A37-03540	LABEL,SAND CA	1							
33	2	172469-03550	LABEL,OP HITCH	1							
34	2	172A37-03550	LABEL,WARNING HITCH	1							
35	2	172469-03610	LABEL,FUSE	1							
36	2	172A37-03680	LABEL,LOCK PIN CA	1							
37	2	172469-03710	LABEL,BONNET OPEN	1							
38	2	172A37-03710	LABEL,ENGROOM CA	1							
39	2	172A37-03720	LABEL,SEAT BELT CA	1							
40	2	172A37-03740	LABEL,TOPS CA	1							
41	2	172A37-03750	LABEL,SPAC CA	1							
42	2	172A37-03760	LAVEL,ADJUST CRAWLER	1							
43	2	172A37-03771	LABEL,OIL&WATER CA	1							
44	2	172A37-03780	LABEL,LIFT Q CA	1							

N:Old $\xleftarrow[\text{No}]{\text{Yes}}$ New, Q:Old $\xleftarrow[\text{Yes}]{\text{No}}$ New, R:Old $\xleftarrow[\text{Yes}]{\text{Yes}}$ New, S:Old $\xleftarrow[\text{No}]{\text{No}}$ New, W:Add, Z:Discontinued, F:Interchangeable by set, K:Q'ty Change

Copyright (C) YANMAR CO., LTD. All RightsReserved.

Parts No. Index

Parts No.	Fig. No.	Ref. No.
104200-11920	9	2
106990-44660	9	14
119160-12530	4	3
119160-12540	4	5
119160-12560	4	2 -1
119247-77100	15	17
	23	37
119650-77910	15	19
119802-55710	10	20
119802-77200	15	18
120147-44810	19	12
121250-49121	7	3
121256-44600	7	18
121450-44531	7	13
121470-44581	7	15
121820-12590	4	6
124450-44550	7	17
124450-44560	7	14
124612-77910	15	22
124766-59050	7	21
	10	23
	70	10
129100-55690	10	19
129107-44590	7	7
129122-44480	20	26
129211-77920	15	23
129418-12530	4	4
129466-96240	21	16
129612-52100	10	17
129640-13580	3	8
129640-13590	3	7
129935-12520	4	2
171064-44510	7	11
171064-44520	7	12
172020-10380	50	22
	53	8
172020-10390	26	17
172020-10400	26	18
172020-10401	26	18 -1
172020-10610	50	5
172020-10620	50	6
		9
	51	10
	52	6
		9
	53	21
		24
	92	5
172020-10730	52	2
172020-10810	51	3

Parts No.	Fig. No.	Ref. No.
172020-10810	52	3
172020-10860	52	4
172020-11030	51	11
172020-11151-1	52	1
172020-11151-2	52	1 -1
172020-11161-1	52	5
172020-11161-2	52	5 -1
172020-11230	52	7
172020-11250	52	8
172020-11280	52	10
172020-11300	52	11
172020-11320	52	14
172020-11340	52	15
172020-11350	52	17
172020-11450	53	22
		25
172020-11500	53	2
172020-11520	53	5
172020-11530	53	9
172020-11540	50	2
	53	6
172020-11690	52	16
172020-11700	52	18
172020-11710	52	25
172020-11720	53	7
172020-11730	53	10
172020-11740	53	17
172068-28490	29	17
		25
	33	2
172110-45050	29	20
		28
172110-76170-1	82	4
172110-76170-3	82	4 -1
172112-16201	11	10
172112-74971	70	5
172112-75770	70	7
172112-75780	70	8
172112-77361	50	38
	51	29
	72	4
		5
		6
	73	3
		4
	76	14
172112-77480	85	1
172112-77580	85	2
172113-12522	5	12
172116-75850-3	70	24

Parts No.	Fig. No.	Ref. No.
172116-75850-B	70	24 -1
172116-76381	77	7
172120-14660	7	23
172122-13310	22	1
172122-17190	36	21
	41	1
172122-17730	20	5
172122-37844	26	22
172122-46590	29	34
	31	32
	33	22
172122-55061	9	15
172122-70260	98	23
172122-70410	98	25
172122-70530	98	27
172122-73860	57	5
172122-73870	57	6
172122-73890	57	11 -1
172122-79930	72	25
	82	21
	84	23
172123-76121	74	2
	76	3
		3 -1
		4
		5
	77	2
	79	1
	83	1
	84	1
		6
172124-13500	23	1
172124-46200	28	5
	29	10
	31	10
	33	18
	90	2
172124-65480	44	26
172124-70380	98	49
172125-03951	1	47
172126-11510	10	1
	12	1
	20	1
	84	8
172137-12270	5	5
172137-13400	10	2
172137-16560	10	16
172137-46040	6	11
	38	1
172137-46041	6	11 -1

Parts No.	Fig. No.	Ref. No.
172137-46041	38	1 -1
172137-46042	6	11 -2
	38	1 -2
172137-46210	16	10
172137-76110	74	1
	98	86
172137-76580	82	11
172141-03360	1	32
172141-14260	9	7
172141-17211	15	9
172141-41340	29	1
172141-41360	31	6
	32	5
	33	5
172141-41370	28	7
	29	3
		6
	31	3
	33	15
172141-72250	54	2
172141-73240	47	114
	48	108
172141-73710	70	6
172141-74430	66	26
172141-74720	47	29
	48	29
172141-76180	76	9
		29
	77	5
	82	2
	84	2
172141-76181	76	9 -1
	77	5 -1
	82	2 -1
	84	2 -1
172141-76220	76	31
172141-76900	50	35
	72	2
172141-76940	79	3
172141-77800	85	3
172142-72260	54	3
172142-72951	54	18
172142-74590	47	135
	48	129
172142-74600	47	47
		124
	48	47
		118
	66	28
172142-76280	81	1

Parts No. Index

Parts No.	Fig. No.	Ref. No.
172142-76940	81	12
172142-76940-2	81	12 -1
172142-76950	80	10
172142-76950-6	80	10 -1
172142-77050	81	2
172142-77811	85	5
172146-03321	1	27
172147-70500	98	26
172147-73150	47	133
	48	127
172147-73810	57	2
172147-73830	57	3
172147-73850	57	4
172147-73880	57	10 -1
172147-76271	72	1
	73	2
172148-70301	98	24
172151-13371	7	27
172151-71630	54	9
172151-72591	51	6
172151-76161	71	4
172155-11120	74	37
172155-45790	86	1
	87	2
	88	2
	92	1
172156-65690	44	29
172156-76110	18	7
172156-78490	82	16
172156-78540	82	17
172157-45990	31	24
	33	13
172157-58830	68	3
172162-12480	32	1
172162-13170	6	5
172162-13180	6	6
172162-14200	9	4
172162-17400	15	8
172162-17410	15	12
172162-18040	22	2
172162-18070	24	1
172162-46690	28	10
172162-57660	36	19
172162-61120	41	46
172162-61500	39	3
	43	1
172162-61770	49	40
172162-61880	45	8
172162-62540	40	12
		18 -1A

Parts No.	Fig. No.	Ref. No.
172162-62540	40	19 -1A
172162-64320	45	2
172162-70150	98	67
172162-70290	98	3
172162-70310	98	4
172162-70320	98	5
172162-70590	98	28
172162-70820	98	68
172162-71480	56	3
172162-71490	56	4
172162-71500	56	5
172162-71510	56	6
172162-71520	56	7
172162-71530	56	8
172162-71540	56	9
172162-71550	56	10
172162-71560	56	11
172162-71570	56	12
172162-71580	56	13
172162-71590	56	14
172162-71660	56	21
172162-71670	56	22
172162-71711	56	27
172162-71720	56	28
172162-71730	56	29
172162-71780	56	30
172162-71820	56	31
172162-71830	56	32
172162-71850	56	33
172162-71860	56	34
172162-71870	56	35
172162-71880	56	36
172162-71900	56	37
172162-71910	56	38
172162-71920	56	39
172162-71960	56	40
172162-72250	50	23
172162-72620	49	11
172162-72680	49	12
172162-72690	49	13
172162-72700	49	14
172162-73700	70	2
172162-76180	76	11
172162-76181	76	11 -1
172162-81060	92	6
172162-81370	87	5
172162-81430	87	6
172162-81680	86	9
172162-82280	88	7
172162-82350	88	8

Parts No.	Fig. No.	Ref. No.
172162-82360	90	4
172162-83580	87	17
172162-83600	86	21
172162-83610	86	22
172162-94270	92	8
172162-94280-1	92	9
172162-94280-2	86	23
172162-94280-3	86	23 -1
	92	9 -1
172164-13520	8	9
172164-16370	11	11
172164-18080	22	3
172164-18780	22	5
172164-18790	22	6
172164-37120	25	18
172164-45230	31	30
172164-45880	41	3
172164-46260	29	33
	33	20
172164-61250	43	5
172164-66170	42	11
	44	31
172164-66640	41	36
172164-66650	8	15
172164-73380	66	23
172164-73390	66	24
172164-73470	66	20
172164-73510	66	25
172164-73650	47	46
		102
		107
	48	46
		101
172164-73870	47	116
	48	110
172164-73960	47	119
	48	113
172164-76131	74	3
172164-76330	76	13
172164-78350	74	27
172164-81670	88	9
172165-12140	5	2 A
172165-13220	6	7
172165-18080	24	2
172165-46340	31	25
	33	21
172165-47550	28	13
172165-47980	28	17
172165-47990	28	18
172165-53480	36	6

Parts No.	Fig. No.	Ref. No.
172165-53490	41	5
172165-53500	36	7
172165-66220	8	14
172165-66980	23	34
	37	18
	40	25
172165-73430	56	54
172165-73441	56	56
172165-73451	56	58
172165-73461	56	59
172165-73480	56	60
172165-73850	47	115
	48	109
172165-73870	47	117
	48	111
172165-75450-2	70	21
172165-75450-3	70	21 -1
172165-75460	70	22
172165-75481	70	23
172165-79810	84	22
172165-82520	88	13
	89	11
172165-82530	88	14
	89	12
172168-45880	31	31
172168-46760	8	20
		21
	38	2
	41	4
172168-54760	89	7
172168-76170	76	6
172168-76370	74	15
172175-17120	12	11
172175-65641	23	11 -1
172175-72480	54	4
172175-76660	74	17
172175-81700	86	2
	87	7
	88	10
	89	1
	92	2
172175-81710	86	4
	87	9
	88	11
	89	2
	92	3
172176-67150	41	50
172176-67790	23	35
172176-73351	56	41
172176-73360	56	42

Parts No. Index

Parts No.	Fig. No.	Ref. No.
172176-73370	56	43
172176-76580-2	81	6
172176-76580-3	78	5
172176-76581-2	81	6 -1
172176-76581-4	78	5 -1
172176-76581-5	81	6 -2
172176-81700	86	3
	87	8
172176-81710	86	5
	87	10
172183-03280	1	21
172183-16560	12	18
172183-61350	37	3
172183-61360	37	4
172183-77810	85	6
172186-76390	74	16
		40
172187-03160	1	7
172187-03941	1	46
	2	17
	87	23 A
172187-11100	21	1
172187-11121	21	2
172187-13731	6	8
172187-13830	6	9
172187-14221	9	5
172187-14290	9	8
172187-14320	9	10
172187-14430	10	3
172187-14460	10	6
172187-14470	10	11
172187-16110	11	4
172187-16150	11	5
172187-16530	12	17
172187-16600	12	19
172187-17070	15	2
172187-17080	15	3
172187-17090	15	4
172187-17100	15	1
172187-17220	12	12
172187-17280	17	3
172187-17320	17	6
172187-17341	17	8
172187-17350	17	9
172187-17360	17	10
172187-17371	17	11
172187-17380	17	12
172187-17470	17	16
172187-17480	17	17
172187-17560	17	18

Parts No.	Fig. No.	Ref. No.
172187-17570	17	19
172187-18110	22	4
172187-18301	21	7
172187-18340	21	8
172187-18341	21	8 -1
172187-18342	21	8 -2
172187-18402	21	9
172187-18410	21	10
172187-18420	21	11
172187-18451	21	12
172187-18500	21	13
172187-45060	34	1
172187-45490	34	2
172187-45500-2	31	20 -1
	33	3 -1
172187-45500-4	31	20
	33	3
172187-45651	31	21
	33	7
172187-45720-2	31	22 -1
	33	8 -1
172187-45720-4	31	22
	33	8
172187-45760	31	23
	33	9
172187-45870	29	8
172187-45880	29	9
172187-53320	36	4
172187-53321	36	4 -1
172187-61421	41	6
172187-61500-2	39	4
172187-61500-3	39	4 -1
172187-61541-3	78	1
172187-61690	41	7
172187-64900	16	12
	41	40
	43	2
172187-65210	44	15
172187-65270	44	16
172187-68050	42	28
172187-71100	47	142
	48	136
172187-71210	47	145
	48	139
172187-72891-1	53	26
172187-72891-2	53	26 -1
172187-72892	53	26 -2
172187-72910-1	49	41
172187-72910-2	49	41 -1
172187-73220	47	17

Parts No.	Fig. No.	Ref. No.
172187-73220	48	17
172187-73230	47	18
	48	18
172187-73240	47	16
	48	16
172187-73250	47	19
	48	19
172187-73311	56	1
172187-73340	56	62
172187-73370	56	2
172187-73380	56	23
172187-73390	56	24
172187-73411	56	26
172187-73420	56	44
172187-73430	56	55
172187-73440	56	57
172187-73700	70	3
172187-73730	70	4
172187-73801	57	1
172187-75340	70	20
172187-75340-2	70	20 -1
172187-75630	47	51
	48	51
172187-75720	47	62
	48	62
172187-75750	47	63
	48	63
172187-76131	74	5
172187-76160	74	6
172187-76170	74	8
	76	7
	77	3
172187-76180	75	1
172187-76190	71	6
172187-76191	71	6 -1
172187-76200	71	8
	74	11
172187-76350	74	14
172187-76400-1	80	2
172187-76400-2	80	2 -1
172187-76420-1	80	3
172187-76420-2	80	3 -1
172187-76440-1	80	4
172187-76440-2	80	4 -1
172187-76460-1	81	3
172187-76460-2	81	3 -1
172187-76480-1	81	4
172187-76480-2	81	4 -1
172187-76520	80	7
172187-76530-1	80	9

Parts No.	Fig. No.	Ref. No.
172187-76530-2	80	9 -1
172187-76690-1	81	8
172187-76690-2	81	8 -1
172187-76821-3	78	8
172187-76930	81	11
172187-76940	81	13
172187-77800	85	4
172187-78201	79	12
172187-78211	79	13
172187-78580	80	17
172187-79220	81	14
172187-79230	81	15
172187-79240	81	16
172187-79300	81	17
172187-81710	88	6
172187-81800	86	6
172187-81810	87	12
172187-81840	87	13
172187-81970	86	7
	87	14
172187-82320	86	11
172187-82340	86	14
172187-82370	86	15
172187-82390	86	16
172187-82400	86	17
172187-82410	86	18
172187-82420	86	19
172187-82430	86	20
	87	16
172187-83040	89	10
172187-94300	92	10
172312-74780	98	72
172312-75130	70	24 C
172312-76020	73	1
172312-77820	85	7
172422-66150	45	14
172422-76100	71	2
172422-76110	76	1
172422-78960	76	27 -1
172423-72520	52	33
172423-72530	52	31
172423-72540	52	32
172423-73370	98	19
172423-73810	57	10
172423-73820	57	11
172425-17630	20	3
172433-64540	46	8
172434-61180	42	2
172434-61350	45	7
172437-03250	1	17

Parts No. Index

Parts No.	Fig. No.	Ref. No.
172437-03250	2	2
172437-03251	1	17 -1
	2	2 -1
172437-03252	1	17 -2
	2	2 -2
172437-03301	1	56
	2	22
	93	54 B
172437-03302	1	56 -1
	2	22 -1
	93	54 B-1
	99	54 B
172437-03311	1	57
	2	23
	93	54 C
172437-03312	1	57 -1
	2	23 -1
	93	54 C-1
	99	54 C
172437-03322	1	28
	2	6
	70	36 A
172437-03342	1	58
	2	24
	94	46 A
172437-03343	1	58 -1
	2	24 -1
	94	46 A-1
	100	52 A
172437-03352	1	31
	2	8
	38	24 B
		25 A
172437-03361	1	33
	2	9
	42	42 A
172437-03372	1	59
	2	25
	93	54 D
	99	54 D
172437-03381	1	34
	2	10
	44	56 A
172437-03391	1	35
	2	11
	8	27 A
172437-03402	1	36
	2	12
	44	56 B
172437-03422	1	38

Parts No.	Fig. No.	Ref. No.
172437-03422	2	14
	44	57 B
172437-03432	1	39
	2	15
	37	26 A
172437-03451	1	60
	2	26
	94	46 B
	100	52 B
172437-03471	1	41
	2	16
	37	26 B
172437-03501	1	42
172437-03511	1	43
172437-03551	1	61
	2	27
	96	31 A
	102	31 A
172437-03601	1	62
	2	7
	93	54 E
	99	54 E
172437-03610	1	44
172437-03620	1	45
172437-74711	68	4
172437-74720	68	5
172437-74732	68	6
172437-79320	84	20
172438-03300	1	25
172441-44320	40	22
172441-74030	67	2
		12
172441-74040	67	3
		13
172441-74050	67	14
172444-13210	7	1
172444-13220	7	2
172444-14410	9	12
172444-17620	43	4
172444-17660	23	2
	41	2
	72	9
	80	1
	87	1
	88	1
172444-45850	31	8
	33	11
172444-45850-1	31	8 -1
	33	11 -1
172444-54920	42	1

Parts No.	Fig. No.	Ref. No.
172444-64730	44	4
172444-65270	44	17
172444-72430	51	17
172444-79110	76	27
172445-18201	21	5
172445-45550	31	5
	33	4
172445-45550-1	31	5 -1
	33	4 -1
172445-72450	50	18 A
	51	18
	52	30
172445-72480	51	13
	52	13
172445-81990	87	15
172446-13330	69	1
172446-13570	8	10
172447-17140	12	6
172448-45800-2	33	10
172448-54120	51	5
	88	4
	89	6
172448-78310	74	25
172450-73360	98	18
172450-73370	98	20
172450-73380	98	21
172455-11602	4	9
172455-11603	4	9 -1
172455-12140	5	4
172455-13131	6	3
172455-13151	6	4
172455-13361	44	2
172455-14240	9	6
172455-14340	9	9
172455-14400	9	11
172455-14500	9	13
172455-16600	13	1
172455-17780	20	6
172455-17790	20	9
172455-17860	20	14
172455-17930	20	25
172455-18010	23	4 A
172455-18020	23	4 B
172455-18030	23	4 C
172455-18040	23	4 D
172455-18050	23	4 E
172455-18060	23	4 F
172455-18070	23	4 G
172455-18080	23	4 AA
172455-18120	23	4

Parts No.	Fig. No.	Ref. No.
172455-18140	23	5
172455-18160	24	3
172455-18170	24	4
172455-18180	24	5
172455-18190	24	6
172455-18210	24	8
172455-18250	24	10
172455-18260	24	11
172455-18270	24	12
172455-18290	22	7
172455-18332-1	22	8
172455-18332-2	22	8 -1
172455-18340	22	9
172455-18350	22	10
172455-18500	22	12
172455-18510	24	13
172455-18520	23	12
172455-18540	24	14
172455-18560	21	14
172455-18811	23	26
172455-18820	23	27
172455-18860	23	29
172455-18870	23	30
172455-18940	22	13
172455-19210	24	15
172455-45520	28	3
172455-45800	30	9
172455-46890	28	11
172455-46950	28	12
172455-53330	36	5
172455-53331	36	5 -1
172455-57650	36	18
172455-57661	36	20
172455-61100-2	38	3
172455-61100-3	38	3 -1
172455-61120-2	38	5
172455-61120-3	38	5 -1
172455-61130-2	38	6
172455-61130-3	38	6 -1
172455-61280-1	37	6
172455-61280-2	37	6 -1
172455-61370-1	38	12
172455-61370-2	38	12 -1
172455-61520-1	37	7
172455-61520-2	37	7 -1
172455-61550-2	38	19 A
172455-61580	41	15
172455-61710	16	11
	23	33 -1
172455-61720	90	3

Parts No. Index

Parts No.	Fig. No.	Ref. No.
172455-62170	40	6
172455-62171	40	6 -1
172455-63440	37	15
172455-63440-1	37	15 -1
172455-63480	37	17
172455-64110	20	23
172455-64130	20	24
172455-64700	41	13
172455-65060	44	6
172455-65100-1	44	8
172455-65100-2	44	8 -1
172455-65220	42	23
172455-65230	42	8
172455-65240	42	9
172455-65410	44	24
172455-65500	44	27
172455-65501	44	27 -1
172455-65560	44	28
172455-65660	42	24
172455-65700	43	9
172455-65701	43	9 -1
172455-65741	42	25
172455-65800	44	30
172455-65950	44	10
172455-65960	44	11
172455-65970	44	12
172455-66110	42	6
172455-66200	42	26
172455-66400	42	27
172455-66430	42	16
172455-66450	42	17
172455-66470	43	10
172455-66630	44	13
172455-66670	44	14
172455-66712	42	7
172455-66713	42	7 -1
172455-68820	46	2
172455-75240	70	12
172455-75240-1	70	12 -1
172455-75270	70	13
172455-75290	70	15
172455-75300	70	16
172455-75320	70	18
172455-75330	70	19
172455-76130	56	63
172455-76160	74	7
172455-76220	83	2
172455-76580	71	9
	78	6
		24

Parts No.	Fig. No.	Ref. No.
172455-78100	71	20
172455-78110	71	22
172455-78120	56	64
172455-78350	74	28
172455-78370	74	29
172455-78710	76	24 -1
172455-79210	84	19
172455-82360	89	8
172455-82380-1	89	3
172455-82380-2	89	3 -1
172455-82391-1	89	4
172455-82391-2	89	4 -1
172455-83300	88	15
172455-83350	89	13
172455-83360	89	14
172456-68100	96	2
		18
	102	2
		18
172456-68110	94	1
	96	19
	100	1
	102	19
172456-68120	94	2
	100	2
172456-68130	94	3
	100	3
172456-68140	94	4
	100	4
172456-68150	94	5
	100	5
172456-68160	94	6
	100	6
172456-68170	94	7
	100	7
172456-68180	93	3
	99	3
172456-68250	93	4
	99	4
172456-68520	95	2
	101	2
172456-68530	95	3
	101	3
172456-68550	93	12
	95	4
	99	10
	101	4
172456-68570	93	14
	99	12
172456-68610	95	7

Parts No.	Fig. No.	Ref. No.
172456-68610	101	7
172456-68650	93	16
	95	10
	99	15
	101	9
172456-68660	93	17
	99	16
172456-68670	93	19
	99	17
172456-68680	93	21
	99	19
172456-68700	97	2
	103	2
172456-68750	93	24
	99	23
172456-68780	94	28
	100	27
172456-68800	94	31
	97	3
	100	30
	103	3
172456-68930	93	27
	95	17
	97	4
	99	26
	101	16
	103	4
172456-68950	93	28
	94	37
	95	19
	97	6
	99	27
	100	43
	101	18
	103	6
172456-68960	95	20
	101	20
172456-68970	95	22
	101	21
172456-69240	93	36
	99	35
172456-69250	93	37
	99	36
172456-69260	93	38
	97	12
	99	37
	103	12
172456-69310	93	39
	99	38
172456-69380	96	14

Parts No.	Fig. No.	Ref. No.
172456-69380	102	14
172456-69420	94	39
	100	45
172456-69460	94	40
	100	46
172456-69520	93	42
	94	41
	95	26
	97	18
	99	41
	100	47
	101	26
	103	18
172456-69550	94	10
	100	10
172456-69551	94	10 -1
	100	10 -1
172456-69560	94	11
	100	11
172456-69561	94	11 -1
	100	11 -1
172456-69570	94	12
	100	12
172456-69580	94	13
	100	13
172456-69670	95	30
	101	30
172456-69680	95	31
	101	31
172456-69700	96	7
	102	7
172456-69760	96	28
	102	28
172456-69780	97	33
	103	32
172456-69840	96	15
	102	15
172456-69870	97	38
	103	38
172456-69900	93	49
	94	43
	95	32
	99	49
	100	49
	101	32
172456-69910	93	50
	94	44
	95	33
	99	50
	100	50

Parts No. Index

Parts No.	Fig. No.	Ref. No.
172456-69910	101	33
172456-69930	93	53
	99	53
172456-69970	96	29
	102	29
172456-69990	96	16
		30
	102	16
		30
172456-73580	66	4
172456-73590	66	5
172456-73870	66	6
172456-73880	66	7
172456-73890	66	8
172456-73900	66	9
172456-73910	66	10
172456-73920	66	11
172456-73930	66	12
172456-73940	66	13
172456-73950	66	14
172456-73960	66	15
172456-73970	66	16
172456-75430	47	138
	48	132
172458-03220	1	14
172458-03240	1	16
172458-12100	5	2
172458-16550	12	4
172458-17700	23	3
172458-17880	14	2
172458-18850	23	11
172458-45810	30	10
172458-45850	28	4
172458-45920	32	4
172458-45920-1	32	4 -1
172458-45950	32	7
172458-46720	8	23 -1
	17	20
	40	8
		9
		10
		11
172458-47640-1	28	16 -1
172458-47640-4	28	16
172458-50480-1	35	2
172458-50480-2	35	2 -1
172458-63100	40	13
172458-63120	40	14
172458-65050	44	5
172458-65060	44	7

Parts No.	Fig. No.	Ref. No.
172458-74230	61	3
	64	3
172458-74360	60	4
	62	16
	64	4
172458-74460	59	7
	60	23
	62	17
	64	5
172458-74650	61	6
172458-78310	76	22
172460-73320	25	2
	35	7
	55	114
172460-76570	71	28
172462-03320	1	29
172462-46230	33	19
172463-03290	1	23
172463-03330	1	30
172463-61600	38	20
172463-62101	40	1
172463-62140	40	3
172463-62150	40	4
172463-65410	44	25
172463-74300	68	1
172463-74511	67	1
172463-74521	67	11
172463-74530	67	4
		15
172463-74540	67	5
		16
172463-74551	67	6
		17
172463-74561	67	7
		18
172463-74570	67	8
		19
172463-74580	67	10
172463-74590	67	9
172463-74700	78	2
172463-78240	84	9
172467-64101	41	61
172467-64110	41	61 A
172467-64120	41	61 B
172467-64130	41	61 C
172467-64140	41	61 D
172467-64150	41	61 E
172467-64160	41	61 F
172467-64170	41	61 G
172467-64180	41	61 H

Parts No.	Fig. No.	Ref. No.
172467-64190	41	61 I
172467-78230	73	12
172469-03261	104	9
172469-03320	104	15
172469-03360	104	19
172469-03480	104	27
172469-03540	104	31
172469-03550	104	33
172469-03610	104	35
172469-03710	104	37
172472-03141	1	3
	2	1
	38	24 A
172472-03171	1	11
172472-03230	1	15
172472-03241	1	49
	2	19
	94	45 B
	100	51 B
172472-03250	1	50
172472-03261	1	18
	2	3
	88	23 A
172472-03271	1	19
	2	4
	88	23 B
172472-03281	1	22
	2	5
	88	23 C
172472-03290	1	24
	16	1 A
172472-03300	1	26
	16	1 B
172472-03330	1	51
	2	20
	88	23 D
172472-17300	17	4
172472-17400	18	5
172472-17400-1	18	5 -1
172472-17401-1	18	5 -2
172472-17470	18	6
172472-17470-1	18	6 -1
172472-17610	19	3
172472-17611	19	3 -1
172472-17650	19	6
172472-45810	29	19
172472-45810-1	29	19 -1
172472-45850	29	27
172472-45850-1	29	27 -1
172472-63150	40	18 -1

Parts No.	Fig. No.	Ref. No.
172472-63160	40	19 -1
172472-63210	40	18
172472-63220	40	19
172472-64532	40	23
172472-64532-1	40	23 -1
172472-64542	40	24
172472-64542-1	40	24 -1
172472-69190	97	8
	103	8
172472-76110	78	3
172472-78800	84	10
172478-03160	1	8
172478-03350	104	17
172478-03360	104	20
172478-03430	1	40
172478-13750	8	18
172478-16570	18	1
172478-16610	19	1
172478-17200	18	3
172478-17201	18	3 -1
172478-17351	17	1
172478-17601	19	2
172478-18210	21	6
172478-45100	30	2
172478-45100-1	30	2 -1
172478-45400	28	2
172478-45400-1	28	2 -1
172478-47600	28	14
172478-47600-1	28	14 -1
172478-47621	28	15
172478-47621-1	28	15 -1
172478-54450-2	36	13
172478-54450-3	36	13 -1
172478-61111-1	38	4
172478-61111-2	38	4 -1
172478-61200	37	1
172478-61200-1	37	1 -1
172478-61270	37	5
172478-61351-1	38	8
172478-61351-2	38	8 -1
172478-61360	38	10
172478-61390	38	13
172478-61401-1	38	14
172478-61401-2	38	14 -1
172478-61500	38	16
172478-61510	38	17
172478-61560-1	38	19
172478-61560-2	38	19 -1
172478-62160	40	5
172478-63200	40	15

Parts No. Index

Parts No.	Fig. No.	Ref. No.
172478-63220	40	17
172478-64280	41	37
172478-64280-1	41	37 -1
172478-64660	41	38
172478-64900	41	41
172478-64970	41	43
172478-64980	41	44
172478-65200	42	4
172478-65490	45	5
172478-65500-1	45	6
172478-65501	45	6 -1
172478-65501-2	45	6 -2
172478-65550	45	10
172478-65551	45	10 -1
172478-65560	45	11
172478-65561	45	11 -1
172478-65570	45	12
172478-65590	45	13
172478-65601-1	45	15
172478-65601-2	45	15 -1
172478-65630	45	16
172478-65650	45	18
172478-65700	45	19
172478-65700-1	45	19 -1
172478-65730	45	21
172478-65740	45	22
172478-65750	42	43
172478-68501	46	1
		1 -1
172478-68850	46	3
172478-68860	46	4
172478-68900	23	36
172478-68910	38	11
172478-68920	38	18
172478-68930	46	5
172478-68940	46	6
172478-68981	46	7
172478-72190	50	3
172478-72210-1	53	20
172478-72210-2	53	20 -1
172478-72610	53	20 -2
172478-76500	80	5
172478-76511-1	80	6
172478-76511-2	80	6 -1
172478-76520-1	82	13
172478-76520-2	82	13 -1
172478-76670	81	7
172478-76702	81	9
172478-76702-2	81	9 -1
172478-76730	81	10

Parts No.	Fig. No.	Ref. No.
172478-78500	83	4
172478-78510	83	5
172478-78700	78	13
		14
172478-78800	84	11
172478-78810	84	12
172478-78820	84	13
172478-78830	84	15
172478-78850	78	16
172478-79620	84	21
172479-73750	55	61
172479-73760	55	30
		62
172479-73790	55	71
172479-73800	55	72
172479-73820	55	73
172479-73930	55	9
		25
172480-78780	76	23
172480-79210	74	33
172487-45900	32	3
172487-45900-1	32	3 -1
172487-78250	74	38
172488-03170	1	20 -1
172490-74310	58	11 -1
	59	12 -1
	60	27 -1
	62	7 -1
	63	7 -1
		21 -1
	65	8 -1
		21 -1
172490-74320	58	12 -1
	59	13 -1
	60	28 -1
	62	8 -1
	63	8 -1
		22 -1
	65	9 -1
		22 -1
172491-78260	76	21
172496-03200	1	53
172496-03260	1	54
	33	1
172496-78450	74	30
172499-03020	104	1
172499-03100	1	63
172499-03110	1	2
172499-03111	1	2 -1
172499-03120	1	48

Parts No.	Fig. No.	Ref. No.
172499-03120	2	18
	94	45 A
172499-03121	1	48 -1
	2	18 -1
	94	45 A-1
	100	51 A
172499-03140	1	4
172499-03150	1	5
172499-03160	1	9
172499-03161	1	9 -1
172499-03270	1	55
	2	21
	93	54 A
	99	54 A
172499-03280	1	52
172499-11300	3	1
172499-11350	3	2
172499-11380	3	4
172499-11390	3	5
172499-11400	3	6
172499-11500	4	1
172499-11550	4	7
172499-11560	4	8
172499-12100	5	3
172499-12101	5	3 -1
172499-12102	5	3 -2
172499-12103	5	3 -3
172499-13100	6	1
172499-13110	6	2
172499-13300	8	1
172499-13350	8	3
		5
172499-13360	8	4
172499-13400	8	7
172499-13420	7	5
172499-13450	7	6
172499-13490	7	8
172499-13500	7	9
172499-13510	7	10
172499-13600	8	8
172499-13720	8	16
172499-13750	8	12
172499-13760	8	13
172499-13770	8	13 A
172499-13800	8	19
172499-13800-1	8	19 -1
172499-14610	10	15
172499-16100	11	1
172499-16500	12	2
172499-16520	12	7

Parts No.	Fig. No.	Ref. No.
172499-17600	20	2
172499-17650	20	4
172499-17800	20	12
172499-17850	20	13
172499-17900	20	17
172499-17950	20	19
172499-17960	20	20
172499-17970	20	21
172499-17980	20	22
172499-18100	21	33
172499-18200	24	7
172499-18340	23	7
172499-18340-1	23	7 -1
172499-18400	23	9
172499-18410	23	10
172499-18600	23	13
172499-18600-1	23	13 -1
172499-18700	23	15
172499-18710	23	16
172499-18720	23	17
172499-18730	23	18
172499-18740	23	19
172499-18750	23	20
172499-18750-1	23	20 -1
172499-18770	23	22
172499-18780	23	23
172499-18790	23	24
172499-18800	23	25
172499-18800-1	23	25 -1
172499-18940	23	31
172499-29100	25	1
172499-29100-1	25	1 -1
172499-37101	26	2
172499-37101-1	26	2 -1
172499-37111	26	3
172499-37131	26	5
172499-37142	26	6
172499-37152	26	7
172499-37161	26	8
172499-37172	26	9
172499-37180	26	10
172499-37300	25	4
172499-37300-2	25	4 -1
172499-37301	25	4 -2
		4 -3
172499-37310	25	5
172499-37330	25	8
172499-37331-1	25	8 -1
172499-37360	25	7
172499-37370	25	9

Parts No. Index

Parts No.	Fig. No.	Ref. No.
172499-37371	25	9 -1
172499-37380	25	10
172499-37500	25	16
172499-37500-1	25	16 -1
172499-37520	25	20
172499-37700	26	13
172499-37700-1	26	13 -1
172499-37750	26	16
172499-37750-1	26	16 -1
		16 -2
172499-37760	26	19
172499-37790	26	20
172499-37800	26	21
172499-38100	27	1
172499-38100-1	27	1 -1
172499-38110	27	17
172499-38110-1	27	17 -1
172499-38120	27	2
		18
172499-38130	27	14
		38
172499-38130-1	27	14 -1
		38 -1
172499-38140	27	30
		45
172499-38140-1	27	30 -1
		45 -1
172499-38160	27	15
		31
		39
		46
172499-38170	27	16
		32
		40
		47
172499-38180	27	3
		19
172499-38190	27	4
		20
172499-38200	27	5
		21
		35
		42
172499-38210	27	6
		22
		36
		43
172499-38220	27	7
		23
172499-38230	27	8

Parts No.	Fig. No.	Ref. No.
172499-38230	27	24
172499-38240	27	9
		25
		37
		44
172499-38250	27	10
		26
172499-38260	27	11
		27
172499-38270	27	12
		28
172499-38280	27	13
		29
172499-38300	27	34
172499-38300-1	27	34 -1
172499-38310	27	41
172499-38310-1	27	41 -1
172499-38600	27	33
172499-45100	29	2
172499-45100-1	29	2 -1
172499-45130	29	5
172499-45130-1	29	5 -1
172499-45150	31	1
172499-45150-1	31	1 -1
172499-45180	31	2
172499-45180-1	31	2 -1
172499-45600	34	3
172499-46100	33	14
172499-46150	33	17
172499-50100	35	1
172499-50100-1	35	1 -1
172499-50740	35	3
172499-50740-1	35	3 -1
172499-50800	35	6
172499-50800-1	35	6 -1
172499-53200	36	1
172499-53200-1	36	1 -1
172499-53300	36	2
172499-53300-1	36	2 -1
172499-53310	36	3
172499-53310-1	36	3 -1
172499-54100	36	9
172499-54100-1	36	9 -1
172499-54101	36	9 -2
172499-54500	36	11
172499-54510	36	12
172499-57600	36	15
172499-57620	36	16
172499-57630	36	17
172499-61150	39	1

Parts No.	Fig. No.	Ref. No.
172499-61150-1	39	1 -1
172499-61160	39	2
172499-61160-1	39	2 -1
172499-61200	38	7
172499-61200-1	38	7 -1
172499-63300	37	10
172499-63301	37	10 -1
172499-63301-1	37	10 -2
172499-63330	37	12
172499-63340	37	13
172499-63350	37	14
172499-64040	41	10
172499-64040-1	41	10 -1
172499-64060	41	11
172499-64060-1	41	11 -1
172499-64080	41	60
172499-64201	41	14
172499-64201-1	41	14 -1
172499-64700	41	39 -1
172499-64710	41	39 A
172499-64800	41	39
172499-64951	41	45
172499-64951-1	41	45 -1
172499-64970	41	48
172499-64990	41	49
172499-65010	41	17
172499-65020	41	18
172499-65030	41	19
172499-65040	41	20
172499-65050	41	21
172499-65060	41	22
172499-65070	41	23
172499-65080	41	24
172499-65090	41	25
172499-65100	41	26
172499-65110	41	27
172499-65120	41	28
172499-65130	41	29
172499-65140	41	30
172499-65150	41	31
172499-65170	43	6
172499-65171	43	6 -1
172499-65180	43	7
172499-65181	43	7 -1
172499-65190	42	3
172499-65200	43	3
172499-65201	43	3 -1
172499-65201-1	43	3 -2
172499-65280	42	10
172499-65300	44	19

Parts No.	Fig. No.	Ref. No.
172499-65300-1	44	19 -1
172499-65350	44	21
172499-65360	44	22
172499-65370	44	23
172499-65400	45	1
172499-65400-1	45	1 -1
172499-65450	45	4
172499-65500	43	8 A
172499-65510	43	8 B
172499-65700	41	32
172499-65710	41	33
172499-65720	41	34
172499-65730	41	35
172499-68400	93	1
172499-68410	93	2
172499-68420	93	5
172499-70100	60	3
172499-70110	60	17
172499-70120	60	18
172499-70130	60	19
172499-70140	60	20
172499-70150	60	21
172499-70160	60	22
172499-70170	59	3
172499-70180	59	4
172499-70190	59	5
172499-70200	59	6
172499-70210	58	4
172499-70220	58	5
172499-70230	58	6
172499-70500	47	105
172499-70510	47	106
172499-70550	47	123
	48	117
172499-70600	47	2
	48	2
172499-70610	47	3
	48	3
172499-70620	47	4
	48	4
172499-70630	47	5
	48	5
172499-70640	47	6
	48	6
172499-70650	47	7
	48	7
172499-70660	47	8
	48	8
172499-70670	47	9
	48	9

Parts No. Index

Parts No.	Fig. No.	Ref. No.
172499-70680	47	10
	48	10
172499-70690	47	11
	48	11
172499-70700	47	12
172499-70701	48	12
172499-70710	47	13
172499-70711	48	13
172499-70720	98	6
172499-70730	98	7
172499-70740	98	8
172499-70750	98	9
172499-70760	98	10
172499-70770	98	11
172499-70780	98	12
172499-70790	98	13
172499-70800	98	29
172499-70810	98	30
172499-70820	98	32
172499-70830	98	33
172499-70840	98	34
172499-70850	98	35
172499-70860	98	36
172499-70870	98	69
172499-70880	98	38
172499-70890	98	39
172499-70900	98	50
172499-70910	98	51
172499-70920	98	52
172499-70930	98	53
172499-70940	98	54
172499-70950	98	70
172499-70960	98	71
172499-70970	98	40
172499-70980	98	41
172499-70990	98	42
172499-71010	98	45
172499-71011	98	45 -1
172499-71020	98	66
172499-71030	98	47
172499-71040	98	14
172499-71050	98	15
172499-71200	47	144
	48	138
172499-71300	47	14
	48	14
172499-71310	47	22
	48	22
172499-71320	47	31
	48	31

Parts No.	Fig. No.	Ref. No.
172499-71330	47	40
	48	40
172499-71340	47	54
172499-71341	48	54
172499-71350	47	66
	48	66
172499-71360	47	75
172499-71361	48	75
172499-71370	47	132
	48	126
172499-71380	47	76
172499-71381	48	76
172499-71390	47	77
	48	77
172499-71400	47	78
	48	78
172499-71410	47	104
172499-71420	47	109
	48	103
172499-71430	47	122
	48	116
172499-71450	47	15
	48	15
172499-71490	47	41
	48	41
172499-71500	47	26
	48	26
172499-71570	47	43
	48	43
172499-71580	47	44
	48	44
172499-71590	47	45
	48	45
172499-71600	47	55
	48	55
172499-71610	47	56
172499-71611	48	56
172499-71620	47	57
	48	57
172499-71630	47	58
	48	58
172499-71640	47	59
	48	59
172499-71650	47	60
	48	60
172499-71660	47	61
	48	61
172499-71690	47	69
	48	69
172499-71700	47	70

Parts No.	Fig. No.	Ref. No.
172499-71700	48	70
172499-71710	47	71
	48	71
172499-71720	47	72
	48	72
172499-71730	47	73
	48	73
172499-71740	47	74
	48	74
172499-71750	47	130
	48	124
172499-71760	47	131
	48	125
172499-71770	47	88
	48	88
172499-71780	47	89
172499-71781	48	89
172499-71790	47	90
	48	90
172499-71800	47	91
	48	91
172499-71810	47	92
	48	92
172499-71820	47	93
	48	93
172499-71830	47	94
	48	94
172499-71840	47	95
	48	95
172499-71850	47	96
	48	96
172499-71860	47	97
	48	97
172499-71870	47	98
	48	98
172499-71880	47	99
	48	99
172499-71890	47	100
172499-71900	47	101
	48	100
172499-71910	47	87
	48	87
172499-72100	49	1
172499-72100-1	49	1 -1
172499-72130	49	2
172499-72140	49	3
172499-72180	49	4
172499-72190	49	5
172499-72200	49	6
172499-72220	49	7

Parts No.	Fig. No.	Ref. No.
172499-72230	49	8
172499-72260	49	9
172499-72270	49	33
172499-72280	49	36
172499-72290	49	10
172499-72290-1	49	10 -1
172499-72310	50	4
172499-72310-1	50	4 -1
172499-72370	50	8
172499-72410	50	11
172499-72430	50	12
172499-72440	50	13
172499-72450	50	14
172499-72460	50	15
172499-72470	50	16
172499-72480	50	17
172499-72490	50	18 A-1
172499-72500	51	1
172499-72500-1	51	1 -1
172499-72501-1	51	1 -2
172499-72510	51	4
172499-72510-1	51	4 -1
172499-72511	51	4 -2
172499-72540	51	8
172499-72540-1	51	8 -1
172499-72570	50	18
172499-72571	50	18 -1
172499-72600	53	1
172499-72600-1	53	1 -1
172499-72650	53	23
172499-72700	50	21
172499-72710	50	24
172499-72720	50	31
172499-72800	50	1
172499-72801	50	1 -1
172499-72801-1	50	1 -2
172499-72850	49	15
172499-72850-1	49	15 -1
172499-72860	49	16
172499-72870	49	17
172499-72880	49	18
172499-72900	49	19
172499-72910	49	27
172499-72920	49	31
172499-72920-1	49	31 -1
172499-72930	49	34
172499-72980	51	17 -1
172499-72981	51	17 -2
172499-72990	49	42
172499-72990-1	49	42 -1

Parts No. Index

Parts No.	Fig. No.	Ref. No.
172499-73010	55	2
172499-73020	55	22
172499-73100	47	1
172499-73101	48	1
172499-73200	98	1
172499-73300	55	1
172499-73310	55	40
172499-73320	55	41
172499-73330	55	42
172499-73340	55	43
172499-73350	55	44
172499-73360	55	45
172499-73370	55	46
172499-73380	55	47
172499-73390	55	48
172499-73400	55	49
172499-73410	55	50
172499-73420	55	51
172499-73430	55	52
172499-73440	55	53
172499-73450	55	3
		54
172499-73460	55	4
		55
172499-73470	55	5
		56
172499-73480	55	57
172499-73490	55	58
172499-73500	55	59
172499-73510	55	60
172499-73520	55	63
172499-73530	55	64
172499-73540	55	65
172499-73550	55	66
172499-73560	55	67
172499-73570	55	68
172499-73580	55	69
172499-73590	55	70
172499-73600	55	78
172499-73610	55	79
172499-73620	55	80
172499-73630	55	81
172499-73640	55	82
172499-73650	55	83
172499-73660	55	84
172499-73670	55	85
172499-73680	55	86
172499-73690	55	87
172499-73700	55	88
172499-73710	55	89

Parts No.	Fig. No.	Ref. No.
172499-73720	55	90
172499-73730	55	91
172499-73740	55	92
172499-73750	55	6
		93
172499-73760	55	7
		94
172499-73770	55	8
		95
172499-73780	55	96
172499-73790	55	97
172499-73800	55	98
172499-73810	55	99
172499-73820	55	100
172499-73830	55	101
172499-73840	55	102
172499-73850	55	103
172499-73860	55	104
172499-73870	55	105
172499-73880	55	23
172499-73890	55	24
172499-73900	55	29
172499-73910	55	31
172499-73920	55	32
172499-73930	55	33
172499-73940	55	10
		34
172499-73950	55	35
172499-74000	65	1
172499-74010	64	1
172499-74020	63	1
172499-74030	63	15
172499-74040	62	1
172499-74050	61	1
172499-74060	60	1
172499-74070	60	15
172499-74080	59	1
172499-74090	58	2
172499-74100	58	1
172499-74101	58	1 -1
172499-74110	65	2
172499-74120	65	15
172499-74121	65	15 -1
172499-74130	64	21
172499-74140	64	2
172499-74150	63	2
172499-74160	63	16
172499-74170	62	2
172499-74180	62	15
172499-74190	61	2

Parts No.	Fig. No.	Ref. No.
172499-74200	60	2
172499-74210	60	16
172499-74220	59	2
172499-74230	58	3
172499-74240	58	18
172499-74250	58	19
	59	18
	60	36
	61	22
	62	28
	63	27
	64	33
	65	27
172499-74260	58	20
172499-74270	58	21
172499-74280	58	22
172499-74300	61	21
172499-74310	64	20
172499-74320	65	14
172499-74330	59	17
	60	35
	62	14
	63	26
172499-74340	60	14
172499-74350	58	17
	63	14
172499-74410	66	1
172499-74420	66	27
172499-74500	66	31
172499-74501	66	31 -1
172499-74550	65	3
172499-74560	60	5
	62	3
		18
	63	3
	65	4
172499-74570	60	6
	62	4
		19
	63	4
	65	5
172499-74580	60	7
	62	5
		20
	63	5
	65	6
172499-74590	60	8
	62	6
		21
	63	6

Parts No.	Fig. No.	Ref. No.
172499-74590	65	7
172499-74600	62	7
	63	7
	65	8
172499-74610	62	8
	63	8
	65	9
172499-74620	62	9
	63	9
	65	10
172499-74630	65	16
172499-74631	65	16 -1
172499-74640	58	7
	59	8
	60	24
	61	5
	63	17
	64	6
		22
	65	17
172499-74650	58	8
	59	9
	60	25
	61	7
	63	18
	64	7
		23
	65	18
172499-74660	58	9
	59	10
	63	19
	64	24
	65	19
172499-74670	58	10
	59	11
	60	26
	61	8
	63	20
	64	8
		25
	65	20
172499-74680	58	11
	59	12
	60	27
	63	21
	65	21
172499-74690	58	12
	59	13
	60	28
	63	22

Parts No. Index

Parts No.	Fig. No.	Ref. No.
172499-74690	65	22
172499-74700	58	13
	59	14
	60	29
	63	23
	65	23
172499-74710	64	26
	65	24
172499-74720	64	27
172499-74730	64	28
172499-74740	58	14
	64	29
172499-74750	64	9
172499-74760	60	9
	62	22
	64	10
172499-74770	60	10
	62	23
	64	11
172499-74780	64	12
172499-74800	69	2
172499-74810	69	3
172499-74830	69	4
172499-74850	64	13
172499-74860	61	9
	64	14
172499-74870	64	15
172499-74890	61	10
	64	16
172499-74900	63	10
172499-74910	63	24
172499-74920	62	10
172499-74930	62	24
172499-74940	61	11
172499-74950	61	12
172499-74960	61	13
172499-74970	61	14
172499-74980	61	15
172499-74990	61	16
172499-76101	71	3
172499-76102	71	3 -1
172499-76160	71	28 -1
172499-76170	74	10
172499-76180	75	2
172499-76190	75	4
172499-76200	79	2
172499-76210	74	12
172499-76230	18	7 -1
172499-76250	75	7
172499-76270	75	10

Parts No.	Fig. No.	Ref. No.
172499-76280	75	11
172499-76290	75	12
172499-76300	98	89
172499-76310	74	14 -1
172499-76311	74	14 -2
172499-76320	76	29 -1
172499-76330	74	15 -1
172499-76331	74	15 -2
172499-76350	76	32
172499-76351	76	32 -1
172499-76470	71	17
172499-76500	81	5
172499-76500-1	81	5 -1
172499-78010	72	10
172499-78020	72	11
172499-78020-1	72	11 -1
172499-78030	72	12
172499-78050	72	14
172499-78050-1	72	14 -1
172499-78060	72	15
172499-78090	71	19
172499-78100	71	21
172499-78110	75	15
172499-78130	71	23
172499-78150	71	24
172499-78160	77	11
172499-78170	76	19
172499-78180	76	20
172499-78210	80	14
172499-78220	80	15
172499-78230	80	16
172499-78240	72	17
172499-78250	72	18
172499-78260	72	19
172499-78270	72	20
172499-78280	72	21
172499-78290	72	22
172499-78300	72	23
172499-78310	72	24
172499-78320	73	13
172499-78330	73	14
172499-78340	74	26
172499-78350	77	12
172499-78360	77	13
172499-78410	73	15
172499-78420	73	16
172499-78430	73	17
172499-78440	73	18
172499-78450	73	19
172499-78460	73	20

Parts No.	Fig. No.	Ref. No.
172499-78510	79	14
172499-78520	79	15
172499-78530	79	16
172499-78540	79	17
172499-78550	79	18
172499-78580	75	16 -1
172499-78581	75	16 -2
172499-78590	75	16 A
172499-78591	75	16 A-1
172499-78600	74	41
172499-78610	74	31
172499-78620	74	32
172499-78630	75	16
		16 B
172499-78631	75	16 B-1
172499-78680	75	17
172499-78760	78	15
172499-78820	84	14
172499-78840	84	16
172499-78860	84	17
172499-78870	83	6
172499-78880	83	7
172499-78890	77	14
172499-78900	76	24
172499-78910	76	25
172499-78920	76	26
172499-78950	84	18
172499-78960	76	27 -2
172499-79100	82	18
172499-79101	82	18 -1
172499-79110	82	19
172499-79111	82	19 -1
172499-79120	82	20
172499-81100	87	3
172499-81100-1	87	3 -1
172499-81200	88	3
172499-81200-1	88	3 -1
172499-81750	87	11
172499-81800	88	12
172499-81850	87	7 -1
172499-81860	87	9 -1
172499-82300	86	8
172499-82301	86	8 -1
172499-82301-1	86	8 -2
172499-82330	86	13
172499-82400	89	5
172499-82400-1	89	5 -1
172499-94100	92	4
172499-94100-1	92	4 -1
172511-17351	18	4

Parts No.	Fig. No.	Ref. No.
172519-63240	7	30
	17	20 -1
		21
	23	32
		33
	37	8
		9
	40	10 -1
		20
		21
	41	8
		9
172519-75250-2	70	24 -2
172519-75270	70	24 B
172524-03271	1	20
172527-76210	75	6
172648-16600	12	5
172649-72750	47	113
	48	107
172649-73680	47	134
	48	128
172649-74470	75	8
172730-31630	25	17
172730-75141	71	1
	77	1
172734-41300	31	29
172734-65270	44	18
172956-73110	66	2
172956-73121	66	3
172958-03160	1	10
172958-17101	16	1
172958-17110	16	1 -1
172958-17120	90	1
172958-17121	90	1 -1
172958-17140	16	4
172958-17150	16	5
172958-17160	16	6
172958-17170	16	7
		7 -1
172958-17180	16	8
		8 -1
172958-17190	16	8 A
172958-17200	16	8 B
172958-17210	16	8 C
172958-17220	16	8 E
172958-72950	54	21
172958-72960	54	22
172958-72982-1	54	23
172958-72982-2	54	23 -1
172958-78120	82	14

Parts No. Index

Parts No.	Fig. No.	Ref. No.
172960-83210	90	17
172964-12140	30	1
172978-16501	14	1
172978-17100	16	9
172978-72540	51	9
172978-72570	51	12
172978-72571	51	12 -1
172978-72590	51	15
172978-72600	51	19
172978-72610	51	16
172978-72611	51	16 -1
172978-72612	51	16 -2
172978-72620	51	26
172978-72650	51	9 -1
172978-72800	54	1
172978-72800-2	54	1 -1
172978-72810	54	5
172978-72810-2	54	5 -1
172978-72830	54	8
172978-72860	54	10
172978-72880	54	8 -1
172978-72890	54	7
172978-72920	54	13
172978-76100	82	1
172978-76401	82	5
172978-76401-2	82	5 -1
172978-76420	82	6
172978-76420-2	82	6 -1
172978-76440	82	7
172978-76440-2	82	7 -1
172978-76460	82	8
172978-76460-2	82	8 -1
172978-76480	82	9
172978-76480-2	82	9 -1
172978-76500	82	10
172978-76500-2	82	10 -1
172978-76520	80	8
172978-76520-2	80	8 -1
172978-78120	82	15
172978-81400	91	1
172978-83101	90	5
172978-83101-2	90	5 -1
172978-83111	90	6
172978-83111-2	90	6 -1
172978-83120	90	7
172978-83130	90	8
172978-83140	90	9
		10
172978-83150	90	11
172978-83161	90	12

Parts No.	Fig. No.	Ref. No.
172978-83170	90	13
172978-83170-2	90	13 -1
172978-83190	90	14
172978-83191	90	14 -1
172978-83221	90	18
172978-83221-2	90	18 -1
172978-83270	90	19
172978-83270-2	90	19 -1
172978-83290	90	20
172978-83291	90	20 -1
172978-83292	90	20 -2
172978-83300	90	21
172978-83300-2	90	21 -1
172978-83320	90	22
172978-83320-2	90	22 -1
172989-73150	66	5 -1
172989-73160	66	4 -1
172989-76120	78	4
172A07-03160	1	6
172A07-03410	104	23
172A21-03220	1	7 -1
172A21-12100	5	1
172A21-13100	6	10 -1
172A21-14470	10	7
172A21-16120	11	3
172A21-16701	12	20
172A21-17110	15	7
172A21-17111	15	7 -1
172A21-18350	21	7 -1
172A21-45300	29	16
172A21-45300-1	29	16 -1
172A21-45310	29	18
172A21-45310-1	29	18 -1
172A21-45320	29	24
172A21-45320-1	29	24 -1
172A21-45330	29	26
172A21-45330-1	29	26 -1
172A21-46600	28	6
172A21-61600	38	20 -1
172A21-68401	99	1
172A21-68411	99	2
172A21-68420	94	8
	100	8
172A21-68430	94	9
	100	9
172A21-68440	94	14
	100	14
172A21-68450	94	15
	100	15
172A21-68460	93	6

Parts No.	Fig. No.	Ref. No.
172A21-68460	99	5
172A21-68470	94	16
	100	16
172A21-68480	94	17
	100	17
172A21-68500	95	1
	101	1
172A21-68510	94	18
	100	18
172A21-68520	93	8
	99	7
172A21-68530	93	9
	99	8
172A21-68540	93	10
	99	9
172A21-68550	93	11
	99	11
172A21-68560	95	5
	101	5
172A21-68570	93	13
	99	13
172A21-68580	95	6
	101	6
172A21-68600	93	15
	99	14
172A21-68610	94	19
	100	19
172A21-68620	94	20
	100	20
172A21-68640	95	8
	101	8
172A21-68650	95	9
	101	10
172A21-68660	94	21
	100	21
172A21-68670	93	18
	99	18
172A21-68680	93	20
	99	20
172A21-68700	94	22
	100	22
172A21-68710	95	11
	101	11
172A21-68720	94	23
	100	23
172A21-68730	94	24
	100	24
172A21-68740	93	23
	99	22
172A21-68750	95	12

Parts No.	Fig. No.	Ref. No.
172A21-68750	101	12
172A21-68760	94	25
	100	25
172A21-68770	94	26
	100	26
172A21-68780	94	27
	100	28
172A21-68791	94	29
	100	29
172A21-68800	94	30
	100	31
172A21-68810	94	32
	100	32
172A21-68820	94	33
	100	33
172A21-68831	94	34
	100	34
172A21-68840	93	25
	96	20
	99	24
	102	20
172A21-68850	95	13
	101	13
172A21-68860	95	14
	101	14
172A21-68880	93	26
	99	25
172A21-68890	94	35
	100	41
172A21-68900	95	15
	101	15
172A21-68910	94	36
	100	42
172A21-68930	95	16
	101	17
172A21-68940	97	5
	103	5
172A21-68950	95	18
	101	19
172A21-68960	94	38
	100	44
172A21-68970	95	21
	101	22
172A21-68980	93	29
	99	28
172A21-68990	93	30
	99	29
172A21-69000	93	31
	99	30
172A21-69020	93	32

Parts No. Index

Parts No.	Fig. No.	Ref. No.
172A21-69020	99	31
172A21-69030	93	33
	95	23
	96	3
		21
	99	32
	101	23
	102	3
		21
172A21-69040	93	34
	97	7
	99	33
	103	7
172A21-69050	95	24
	101	24
172A21-69060	93	35
	95	25
	99	34
	101	25
172A21-69070	96	1
	102	1
172A21-69080	96	4
	102	4
172A21-69090	96	5
	102	5
172A21-69100	96	6
	102	6
172A21-69110	96	8
	102	8
172A21-69120	96	9
	102	9
172A21-69130	96	10
	102	10
172A21-69140	96	11
	102	11
172A21-69150	96	12
	102	12
172A21-69160	96	13
	102	13
172A21-69170	96	17
	102	17
172A21-69180	96	22
	102	22
172A21-69190	96	23
	102	23
172A21-69200	96	24
	102	24
172A21-69210	96	25
	102	25
172A21-69220	96	26

Parts No.	Fig. No.	Ref. No.
172A21-69220	102	26
172A21-69230	96	27
	102	27
172A21-69241	97	1
	103	1
172A21-69251	97	9
	103	9
172A21-69280	97	13
	103	13
172A21-69330	97	14
	103	14
172A21-69360	97	15
	103	15
172A21-69400	97	16
	103	16
172A21-69420	97	17
	103	17
172A21-69430	93	51
	99	51
172A21-69440	93	52
	99	52
172A21-69451	97	10
	103	10
172A21-69461	97	11
	103	11
172A21-69500	93	40
	99	39
172A21-69510	99	40
172A21-69520	93	41
	99	42
172A21-69530	95	27
	101	27
172A21-69540	95	28
	101	28
172A21-69550	95	29
	101	29
172A21-69560	93	43
	99	43
172A21-69570	93	44
	99	44
172A21-69580	94	42
	100	48
172A21-69590	93	45
	99	45
172A21-69600	93	46
	99	46
172A21-69610	93	47
	99	47
172A21-69620	93	48
	99	48

Parts No.	Fig. No.	Ref. No.
172A21-69650	97	19
	103	19
172A21-69660	97	20
	103	20
172A21-69670	97	21
	103	21
172A21-69680	97	22
	103	22
172A21-69690	97	23
	103	23
172A21-69700	97	24
	103	24
172A21-69710	97	25
	103	25
172A21-69720	97	26
	103	26
172A21-69730	97	27
	103	27
172A21-69740	97	28
	103	28
172A21-69750	97	29
	103	29
172A21-69760	97	30
	103	30
172A21-69770	97	31
	103	31
172A21-69780	97	32
	103	33
172A21-69790	97	34
	103	34
172A21-69800	97	35
	103	35
172A21-69810	97	36
	103	36
172A21-69820	97	37
	103	37
172A21-69850	94	34 A
	100	35
172A21-69860	94	34 B
	100	36
172A21-69870	94	34 C
	100	37
172A21-69880	94	34 D
	100	38
172A21-69890	94	34 E
	100	39
172A21-69900	94	34 F
	100	40
172A21-72710	52	5 -2
172A21-72720	52	8 -1

Parts No.	Fig. No.	Ref. No.
172A21-75110	9	11 -1
	70	18 -1
172A21-76110	78	24 -1
172A36-03411	1	37
	2	13
	44	57 A
172A36-74690	68	2 -1
172A36-74700	68	2
172A36-74750	68	7
172A36-74780	68	8
172A37-03150	104	2
172A37-03160	104	3
172A37-03180	104	4
172A37-03200	104	5
172A37-03231	104	6
172A37-03241	104	7
172A37-03250	104	8
172A37-03271	104	10
172A37-03280	104	11
172A37-03290	104	12
172A37-03300	104	13
172A37-03310	104	14
172A37-03330	104	16
172A37-03350	104	18
172A37-03360	104	21
172A37-03400	104	22
172A37-03410	104	24
172A37-03420	104	25
172A37-03430	104	26
172A37-03500	104	28
172A37-03520	104	29
172A37-03530	104	30
172A37-03540	104	32
172A37-03550	104	34
172A37-03680	104	36
172A37-03710	104	38
172A37-03720	104	39
172A37-03740	104	40
172A37-03750	104	41
172A37-03760	104	42
172A37-03771	104	43
172A37-03780	104	44
172A38-03200	1	12
172A38-03201	1	12 -1
172A38-03210	1	13
172A38-03211	1	13 -1
172A47-17210	15	1 A
172A52-76130	98	87
172A77-17500	17	22
172A79-12150	5	2 A-1

Parts No. Index

Parts No.	Fig. No.	Ref. No.
172B06-37951	106	7
172B12-37300	105	1
172B12-37310	105	2
172B12-37330	105	4
172B12-37340	105	5
172B12-37370	105	6
172B12-37380	105	7
172B12-37750	106	1
172B12-37760	106	2
172B12-37790	106	3
172B12-37800	106	4
172B12-37810	106	5
172B12-37820	106	6
184015-59190	7	22
184015-59200	7	24
184015-59250	7	26
184015-59260	7	28
184016-44700	7	19
184016-44710	7	20
184016-55700	10	18
184016-55701	10	16 -1
		18 -1
194145-04810	44	1
	51	2
194151-57100	15	15
194200-37780	31	28
194464-52190	15	14
194630-42120	25	11
		21
194680-51670	12	21
197821-88070	23	6
197821-88380	24	9
198083-87570	22	4 B
198127-86540	19	10
198146-87120	22	4 A
198244-87040	23	4 H
198244-88040	23	4 I
1A1040-43900	30	5
	32	2
1A1040-45890	31	9
	33	12
1A1040-56900	5	7
		7 -1
1A1380-55310	21	15
1A1380-62160	44	3
1C6281-52310	5	6
1D4070-23580	28	1
1E6480-16920	6	10
1T3681-86450	25	22
22117-040000	29	11

Parts No.	Fig. No.	Ref. No.
22117-080000	68	9
22117-100000	3	9
	71	27
22137-060000	5	8
	10	24
	15	24
	19	7
		13
	22	14
	23	38
	24	16
	67	20
22137-080000	4	10
	21	17
		18
		19
		20
	23	39
	24	17
		18
	28	19
		20
		21
	29	22
		30
		35
	31	33
	33	23
		24
	40	26
	41	51
	42	29
		30
	43	11
	44	36
		37
	90	23
22137-100000	8	26
	12	22
	21	21
	22	15
	31	26
	33	25
	38	21
	39	5
	40	28
	41	52
		52 -1
	42	31
		32

Parts No.	Fig. No.	Ref. No.
22137-100000	43	12
		13
	44	38
		39
		40
		41
		42
	80	11
	90	24
		24 -1
		25
22137-120000	42	33
22137-160000	9	21
	35	8
	70	33
22137-240000	68	10
22157-080000	11	12
	15	11
	37	25
	42	34
22157-100000	39	6
	41	53
	44	43
		43 A
		44
22157-120000	39	7
	43	14
	88	16
22157-140000	86	24
	87	18
	88	17
	92	11
22217-050000	70	25
22217-060000	12	23
	19	8
		14
	22	16
	68	11
22217-080000	10	25
	11	6
	22	17
	23	40
		41
	30	6
	31	34
	37	19
	58	23
22217-100000	3	10
	6	12
	8	22

Parts No.	Fig. No.	Ref. No.
22217-100000	11	7
	12	24
		25
	15	25
	31	11
	37	20
	43	15
	44	45
	49	43
22217-120000	6	13
	46	9
22217-140000	86	25
	87	19
	88	18
	92	12
22217-160000	6	14
	9	22
	25	3
		26
	26	14
	35	9
	36	8
	41	54
	47	140
	48	134
	55	115
	56	65
	70	34
	98	91
22217-200000	25	14
	105	11
22242-000250	28	22
22242-000350	25	23
	34	4
	47	20
	48	20
	55	106
	90	26
22242-000380	50	39
22242-000400	25	12
22242-000450	25	12 -1
	105	8
22242-000700	57	7
22242-001000	86	26
22252-000220	75	13
22252-000350	21	3
22252-000450	90	27
		28
22252-000800	25	24
	47	21

Parts No. Index

Parts No.	Fig. No.	Ref. No.
22252-000800	48	21
22272-000070	28	23
22312-100250	55	107
22351-030028	16	8 D
22351-035040	28	24
22351-060040	28	25
22372-080000	42	35
22417-160160	29	36
	30	12
	31	35
	33	26
22417-200160	68	12
22417-200200	28	26
	42	36
	44	46
		47
22417-250200	31	27
	33	27
22487-080300	68	13
22867-400100	23	42
22869-400160	23	43
23000-013000	70	10 -2
	74	34
		42
	77	15
23000-070000	4	11
23000-080000	4	12
23000-090000	4	13
23001-016000	56	66
	74	35
		39
23001-022000	20	27
	76	28
23001-025000	74	36
23001-035000	78	17
23001-041000	75	18
23001-048000	7	31
23001-054000	71	25
23001-090000	71	26
23010-014000	9	16
	70	10 -1
23061-043000	19	15
23061-050500	10	26
23065-070225	7	16
23080-013000	9	17
23391-020000	84	4
23391-030000	79	4
23393-040000	73	5
23393-060000	78	18
23394-020000	73	6

Parts No.	Fig. No.	Ref. No.
23394-020000	79	5
23394-030000	73	7
	79	6
23394-040000	73	8
	79	7
23394-060000	78	19
23871-005000	54	24
23871-010000	68	14
23871-020000	74	18
		43
23871-030000	56	67
	57	8
23871-040000	9	18
	56	68
23871-060000	81	18
23876-020000	26	11
24101-063074	25	25
24104-062020	21	4
24190-120001	55	36
		74
		108
24311-000160	7	4
	10	21
	66	17
24311-000210	30	7
	31	12
	32	8
	33	28
24311-000250	68	15
24311-000320	68	16
24311-000340	28	27
24311-000380	70	26
24311-000440	47	64
	48	64
24311-000490	26	12
24311-000700	90	29
24311-000800	57	12
24311-001000	57	13
24315-000040	59	15
24315-000050	64	17
24315-000060	60	30
	61	17
24315-000070	55	11
		109
	98	73
24315-000080	47	137
	48	131
	98	74
24315-000100	47	53
	48	53

Parts No.	Fig. No.	Ref. No.
24315-000100	98	75
24315-000110	18	8
	47	30
		49
		126
	48	30
		49
		120
	55	12
		13
		37
		75
	58	15
	59	16
	60	11
		31
		32
	61	18
	62	11
		25
	63	11
		25
	64	18
		30
	65	11
		25
	66	30
	71	29
	74	9
		19
	76	8
		10
		12
		15
		15 -1
		16
		17
		30
	77	4
		6
		8
	79	8
	82	1 A
		3
	83	3
	84	3
		5
		7
	98	76
		77

Parts No.	Fig. No.	Ref. No.
24315-000110	98	78
24315-000140	26	23
	55	14
		26
	60	37
	61	19
	64	31
	65	26
	71	11
	74	24
	77	9
		10
	98	79
		80
		88
		90
24315-000150	60	33
	98	81
24315-000160	55	15
		16
		27
		76
	98	82
24315-000180	50	37
		40
	51	30
	55	17
		18
		38
		110
	58	16
	60	34
	64	32
	71	5
		10
		12
	72	3
		7
		8
	73	9
	74	4
		20
	76	2
		18
	78	7
		25
	79	9
24315-000200	55	19
		20
		28

Parts No. Index

Parts No.	Fig. No.	Ref. No.
24315-000200	55	39
	59	19
	60	38
	61	23
	62	29
	63	28
	64	34
	65	28
24315-000210	98	83
24315-000240	71	7
	74	13
	79	10
24315-000260	49	37
	55	21
		77
24315-000290	74	21
	75	3
		5
		6 A
24316-000240	75	14
24321-000400	25	13
	105	9
24321-000650	10	22
24321-000950	57	14
24321-001000	86	12
24321-001350	70	27
24321-001700	70	28
24325-000300	47	127
	48	121
24325-000400	71	13
24325-000550	71	14
24325-001300	98	84
24325-001450	98	85
24341-000300	70	29
24550-025150	28	9
24550-045250	54	12
24550-065400	50	20
	53	4
24761-020000	26	24
	29	12
	49	38
	51	31
	85	8
		9
	86	27
	88	19
	89	15
	90	30
		31
	92	13

Parts No.	Fig. No.	Ref. No.
24761-040000	31	13
	49	39
	50	41
	87	20
	88	20
	92	14
24761-050000	28	28
	31	14
	33	29
	51	32
	52	34
	89	16
26013-060102	9	19
26013-060122	15	26
		27
	18	9
	23	44
26013-060162	10	27
	15	28
		29
		30
26013-060202	15	31
		32
	67	21
26013-060252	24	19
26013-060302	29	32
26013-080122	18	10
	22	18
	42	37
26013-080162	7	32
	10	28
	12	26
	15	33
	21	22
		23
		24
	28	29
		30
	31	15
	32	9
	33	30
	41	55
		62
	42	18
		38
	43	16
	45	23
	66	32
	69	5
	78	20

Parts No.	Fig. No.	Ref. No.
26013-080162	90	32
26013-080202	4	14
	7	33
	8	23
	15	10
	21	22 -1
	22	19
		20
	24	20
	28	31
	32	10
	37	9 -1
26013-080252	3	13
	21	25
		26
		27
	24	21
	68	19
26013-080352	3	14
	21	28
26013-080902	23	45
26013-100162	5	9
	10	29
	18	11
	19	11
	56	69
26013-100202	4	15
	8	24
	20	28
	22	21
	28	32
		33
	33	31
	37	21
		22
	38	22
	39	8
		9
	40	7
	41	56
		57
		58
	42	19
		20
	43	17
	45	24
	58	24
	70	30
		31
	72	26

Parts No.	Fig. No.	Ref. No.
26013-100202	74	22
	78	21
		22
26013-100252	5	10
	31	16
	36	14
	42	21
		39
	44	48
		49
		50
		51
		52
		52 A
	51	33
	68	20
	71	15
	81	19
	90	33
26013-100302	47	143
	48	137
	78	23
26013-100402	57	9
	66	33
	71	18
26013-100502	80	12
	81	20
	90	34 -1
26013-100552	90	34
26013-100602	72	27
26013-120202	42	40
	43	18
26013-120302	39	10
	86	28
	88	21
	92	15
26013-120352	35	4
26013-120402	57	15
	80	13
26013-120452	71	16
26013-120552	81	21
26013-120702	81	22
26014-080162	42	41
26014-080202	69	6
26014-080252	82	12
26014-080352	82	22
26014-100202	41	59
	42	20 -1
	45	25
		26

Parts No. Index

Parts No.	Fig. No.	Ref. No.
26014-100202	45	27
	49	44
	53	27
	70	30 -1
		31 -1
26014-100252	42	21 -1
26022-050102	24	22
26022-050122	9	20
	68	17
26022-080162	7	34
26023-040082	24	23
26023-050122	22	22
26051-080002	29	37
	30	13
	31	36
	33	32
26076-100252	44	53
26076-120352	6	15
26076-161302	91	2 -1
		2 -2
26076-200409	25	15 -1
	105	12
26106-080352	21	29
26106-080602	21	30
26106-100122	35	5
26106-100162	38	23
26106-100352	21	31
	34	5
26106-100552	34	6
26106-100652	3	11
26116-050102	70	32
26116-060162	19	9
		16
26116-060602	22	23
26116-080202	30	8
	90	35
26116-080254	31	17
	33	33
26116-080702	10	30
26116-080802	58	25
26116-080952	37	23
26116-081002	37	23 -1
26116-100162	11	8
	12	27
		28
	15	34
26116-100202	31	18
	49	45
26116-100354	30	3
26116-100502	43	19

Parts No.	Fig. No.	Ref. No.
26116-100504	29	13
26116-100602	37	24
26116-100752	8	25
26116-121402	86	29
26116-140252	86	30
	87	21
26116-140352	86	31
	87	22
	88	22
	92	16
26116-160402	70	35
26116-160452	9	23
	47	141
	48	135
26116-160502	56	70
	98	92
26116-160702	26	15
26116-160852	25	27
26116-161202	89	17
	90	36
		37
26116-161302	91	2
26116-200402	25	15
26216-160452	55	116
26347-080002	29	23
		31
	33	34
	44	54
26347-100002	42	22
	44	55
26367-050002	22	24
26450-040102	66	18
26450-060122	60	12
	62	12
		26
	63	12
	65	12
26450-060162	68	18
26450-060222	47	108
	60	13
	62	13
		27
	63	13
	65	13
26450-060302	64	19
	98	62
26450-060352	54	25
26450-060402	60	39
	61	20
26450-080202	98	63

Parts No.	Fig. No.	Ref. No.
26450-080302	66	19
26450-080452	47	121
	48	115
26450-080502	21	32
26450-080652	55	111
26450-100202	47	128
	48	122
26450-100302	47	65
		103
	48	65
		102
	55	112
26450-100452	47	129
	48	123
26450-120302	47	139
	48	133
	55	113
	56	61
26450-120952	56	25
26450-140402	98	64
		65
26559-050202	23	46
26577-080122	40	27
26587-040122	29	14
26706-100002	3	12
26712-080002	23	47
		48
26716-060002	12	29
26716-080002	11	9
		13
	22	25
	23	47 -1
		48 -1
	31	19
	33	35
26716-100002	29	15
	30	4
	33	36
	70	9
26716-120002	86	32
26716-160002	25	28
	55	117
	89	18
	90	38
		39
	91	3
26716-180002	86	33
26756-100002	90	40
26757-050002	30	11
26776-180002	15	16

Parts No.	Fig. No.	Ref. No.
29220-788200	15	13
29420-050000	12	14
29420-150000	12	15
29420-300000	12	16
41851-000110	18	8 -1
	71	29 -1
	74	19 -1
	76	10 -1
		12 -1
		15 -2
		16 -1
		17 -1
	77	6 -1
		8 -1
	79	8 -1
	82	3 -1
	83	3 -1
	84	3 -1
		5 -1
		7 -1
41851-000140	71	11 -1
	77	9 -1
		10 -1
41851-000180	71	12 -1
	72	7 -1
		8 -1
	73	9 -1
	74	20 -1
	76	18 -1
	78	25 -1
	79	9 -1
41851-000240	71	7 -1
	79	10 -1
772499-03110	1	1
772499-03111	1	1 -1
772499-14100	9	1
772499-37100	26	1
772499-75100	70	1
772499-75100-1	70	1 -1
933110-00301	15	6
933110-54100	29	38
	30	14
	31	37
	33	37
933111-50001	74	23
933126-00500	50	42
933147-03400	49	46
933152-09280	10	31
	12	30
	13	2

Parts No. Index

Parts No.	Fig. No.	Ref. No.
933152-09280	14	3
	22	26
	24	24
		25
		26
933160-01370	73	10
		11
	79	11
933168-14170	49	47
933168-55770	5	11
	7	25
		29
	10	32
	18	12
933169-15231	14	4
933171-13691	105	10
933171-15680	12	31
	20	29

Parts No.	Fig. No.	Ref. No.

Parts No.	Fig. No.	Ref. No.

Parts No.	Fig. No.	Ref. No.