YANMAR

PARTS CATALOG

0CK50-M00650EN

Last update Nov., 2017

PREFACE

1. This Parts Catalog carries Yanmar excavator (crawler back-hoe) SV100-2A for U.S.A..

2. Parts catalog history

		Model	Published	Remarks
1st edition	Vehicle	SV100-2A(US)	Jun.,2015	
	Engine	4TNV98CT-VBV		

3. Your understanding is asking that this parts catalog is not a technical data manual setting forth as servicing procedures, This parts catalog is using simplified illustration.
   Be sure to use Yanmar Genuine Parts in your maintenance servicing of Yanmar products.
   Be careful not to use the simple parts available in the market, otherwise their use in repairing causes such as an early breakage, for instance.

VEHICLE PAINTED COLOR

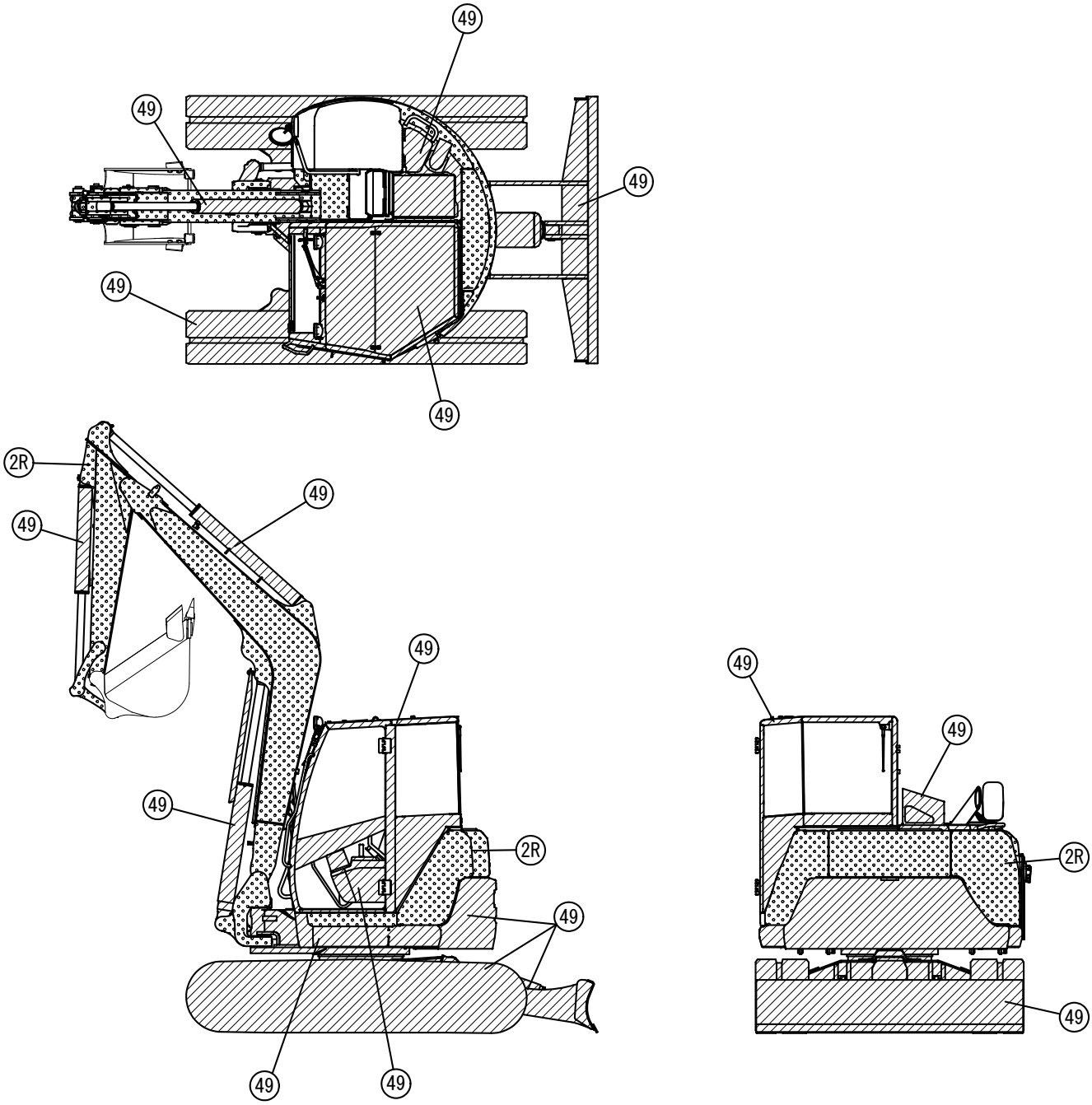

Color Code	Desc-ription	Painted Color	Paint Part No.		
			16L Can	4L Can	SPRAY
2R		YANMAR Turmeric Yellow	-------	977620-41001	977620-41002
49		YANMAR Navy Gray	-------	TOR-91390000	TOR-94800490

PICTURESQUE INDEX(1)・・・MAIN PARTS

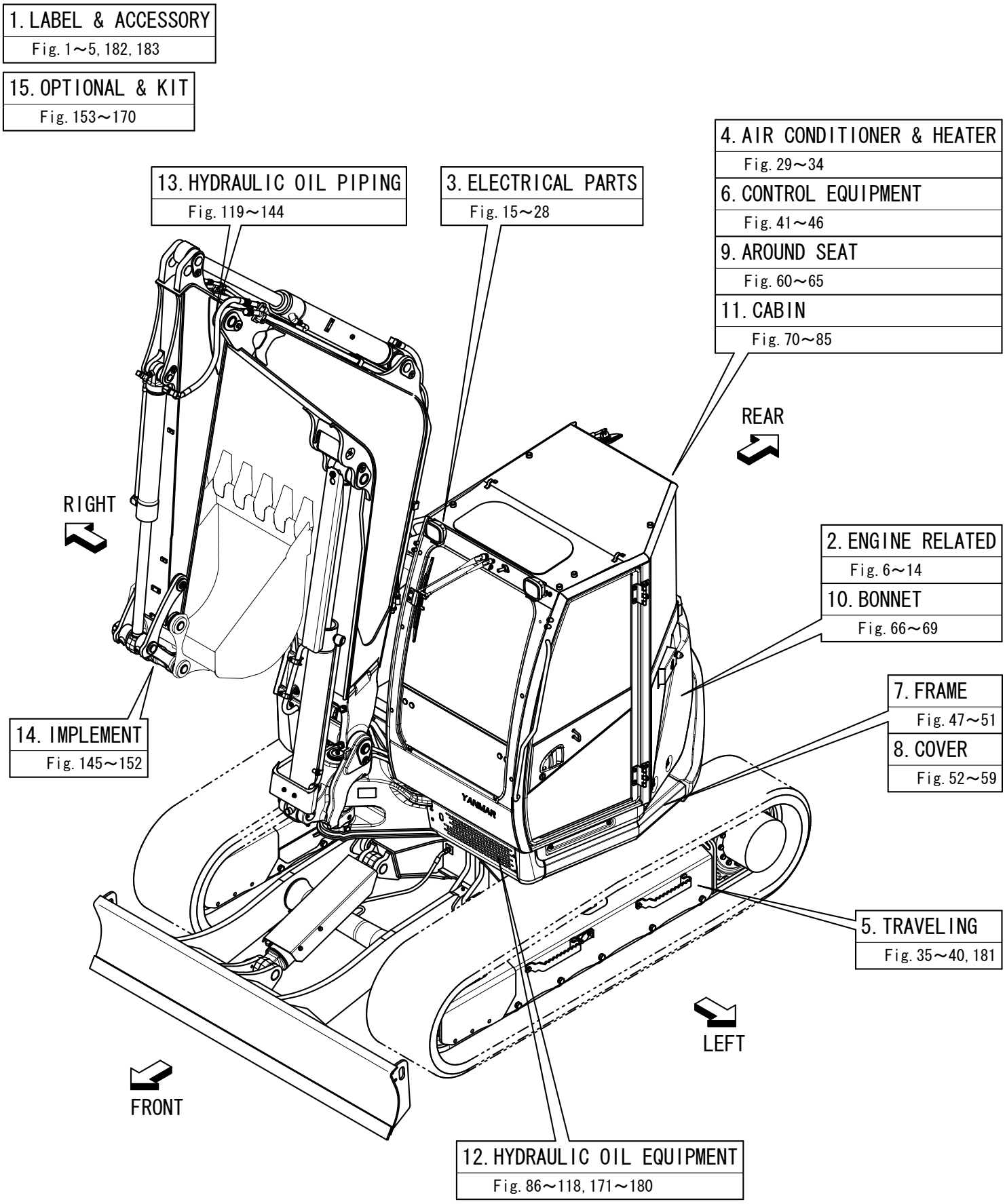

PICTURESQUE INDEX(2) ・・・HYDRAULIC SECTION

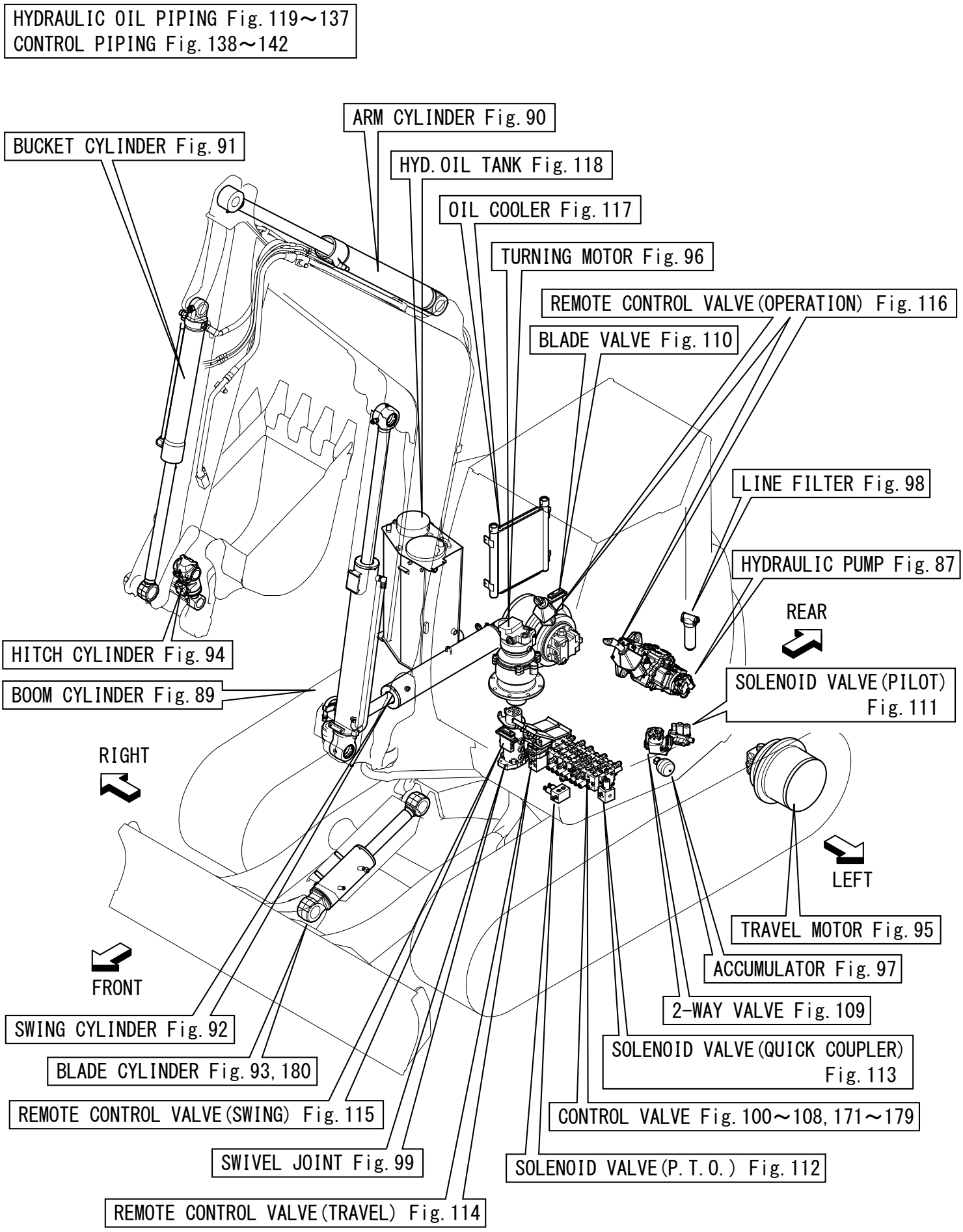

Contents

0CK50-M00650

Fig. No. Fig. Name

LABEL & ACCESSORY

1. LABEL(EXTERIOR)(TO MAF000)
182. (1A)LABEL(EXTERIOR)(FROM MAF001)
2. LABEL(BONNET INSIDE)
3. LABEL(CABIN)(TO MAF000)
183. (3A)LABEL(CABIN)(FROM MAF001)
4. LABEL(QUICK COUPLER)
5. ACCESSORY

ENGINE RELATED

6. SILENCER
7. AIR CLEANER
8. ACCELERATOR
9. ENGINE MOUNT
10. RADIATOR
11. RADIATOR MOUNT
12. SUB TANK
13. FUEL TANK
14. FUEL PIPING

ELECTRICAL PARTS

15. AROUND THE ENGINE
16. AROUND THE CONTROL VALVE
17. BATTERY
18. DUMMY CONNECTOR

Fig. No. Fig. Name

19. COUPLER
20. SEAT MOUNT
21. STARTER SWITCH
22. QUICK COUPLER(SWITCH BOX)
23. TRAVEL ALARM
24. HYD. OIL SWITCH
25. CONTROLLER
26. WORK LAMP
27. INDICATOR BOX
28. GPS

AIR CONDITIONER & HEATER

29. AIR CONDITIONER(CABIN RELATED)
30. AIR CONDITIONER(PIPING)
31. AIR CONDITIONER(UNIT)(INNER PARTS)
32. AIR CONDITIONER(ENGINE RELATED)
33. AIR CONDITIONER(CONDENSER RELATED)
34. AIR CONDITIONER(CONDENSER)(INNER PARTS)

TRAVELING

35. SPROCKET
36. IDLER & ADJUST
37. TRACK ROLLER
38. CARRIER ROLLER
39. CRAWLER ADJUST(Y SPEC.)(TO M21258)

Contents

0CK50-M00650

Fig. No.	Fig. Name
181.	(39A)CRAWLER ADJUST(S SPEC.)(FROM M21259)
40.	CRAWLER

CONTROL EQUIPMENT

41.	TRAVEL LEVER
42.	BLADE LEVER
43.	SWING PEDAL
44.	LOCK LEVER & LEVER STAND
45.	PEDAL STAND
46.	ARMREST

FRAME

47.	TRAVEL FRAME
48.	CRAWLER GUARD
49.	COUNTER WEIGHT
50.	TURNING FRAME
51.	TURNING BEARING

COVER

52.	COVER(FUEL TANK SIDE)
53.	TAIL COVER
54.	CENTER COVER
55.	COVER(SEAT MOUNT)
56.	COVER(TURNING FRAME)
57.	COVER(TRAVEL FRAME)

Fig. No.	Fig. Name
58.	FRAME GUARD(LEFT)
59.	FRAME GUARD(RIGHT)

AROUND SEAT

60.	FLOOR MAT
61.	LEVER BOX
62.	SIDE COVER
63.	SEAT MOUNT
64.	SEAT SLIDE
65.	SEAT

BONNET

66.	BONNET(FRONT)
67.	BONNET(REAR)
68.	BONNET(LEFT)
69.	BONNET(RIGHT)

CABIN

70.	CABIN MOUNT(BRACKET)
71.	CABIN MOUNT(ANTIVIBRATION MOUNT)
72.	CABIN(ASSEMBLY)
73.	CABIN(ACCESSORY)(1)
74.	CABIN(ACCESSORY)(2)
75.	CABIN(ACCESSORY)(3)
76.	CABIN(ELECTRIC PARTS)

Contents

0CK50-M00650

Fig. No.	Fig. Name
77.	CABIN(GLASS)
78.	CABIN(FRONT WINDOW)(1)
79.	CABIN(FRONT WINDOW)(2)
80.	CABIN(WIPER & WINDOW WASHER)
81.	CABIN(RADIO)
82.	CABIN DOOR
83.	REARVIEW MIRROR
84.	CABIN(COVER)
85.	SIDE MIRROR

HYDRAULIC OIL EQUIPMENT

Fig. No.	Fig. Name
86.	HYDRAULIC PUMP MOUNT & JOINT
87.	HYDRAULIC PUMP
88.	CONTROL VALVE PLATE
89.	BOOM CYLINDER
90.	ARM CYLINDER
91.	BUCKET CYLINDER
92.	SWING CYLINDER
93.	BLADE CYLINDER(K SPEC.)
180.	(93A)BLADE CYLINDER(J SPEC.)
94.	HITCH CYLINDER
95.	TRAVEL MOTOR
96.	TURNING MOTOR
97.	ACCUMULATOR
98.	LINE FILTER

Fig. No.	Fig. Name
99.	SWIVEL JOINT
100.	CONTROL VALVE(A-TYPE)(1/9)(TO M20900)
101.	CONTROL VALVE(A-TYPE)(2/9)(TO M20900)
102.	CONTROL VALVE(A-TYPE)(3/9)(TO M20900)
103.	CONTROL VALVE(A-TYPE)(4/9)(TO M20900)
104.	CONTROL VALVE(A-TYPE)(5/9)(TO M20900)
105.	CONTROL VALVE(A-TYPE)(6/9)(TO M20900)
106.	CONTROL VALVE(A-TYPE)(7/9)(TO M20900)
107.	CONTROL VALVE(A-TYPE)(8/9)(TO M20900)
108.	CONTROL VALVE(A-TYPE)(9/9)(TO M20900)
171.	(108A)CONTROL VALVE(B-TYPE)(1/9)(FROM M20901)
172.	(108B)CONTROL VALVE(B-TYPE)(2/9)(FROM M20901)
173.	(108C)CONTROL VALVE(B-TYPE)(3/9)(FROM M20901)
174.	(108D)CONTROL VALVE(B-TYPE)(4/9)(FROM M20901)
175.	(108E)CONTROL VALVE(B-TYPE)(5/9)(FROM M20901)
176.	(108F)CONTROL VALVE(B-TYPE)(6/9)(FROM M20901)
177.	(108G)CONTROL VALVE(B-TYPE)(7/9)(FROM M20901)
178.	(108H)CONTROL VALVE(B-TYPE)(8/9)(FROM M20901)
179.	(108I)CONTROL VALVE(B-TYPE)(9/9)(FROM M20901)
109.	2-WAY VALVE
110.	BLADE VALVE
111.	SOLENOID VALVE(PILOT)
112.	SOLENOID VALVE(P.T.O.)
113.	SOLENOID VALVE(QUICK COUPLER)
114.	REMOTE CONTROL VALVE(TRAVEL)

Contents

0CK50-M00650

Fig. No.	Fig. Name
115.	REMOTE CONTROL VALVE(SWING)
116.	REMOTE CONTROL VALVE(OPERATION)
117.	OIL COOLER
118.	HYD. OIL TANK

HYDRAULIC OIL PIPING

119.	PUMP & OIL COOLER(FITTING)
120.	PUMP - CONTROL VALVE - OIL COOLER
121.	TANK - PUMP & SWING CYLINDER
122.	CONTROL VALVE - TURNING MOTOR
123.	CONTROL VALVE(FITTING)(1)
124.	CONTROL VALVE(FITTING)(2)
125.	CONTROL VALVE(FITTING)(P.T.O.)
126.	SCREW CAP
127.	CONTROL VALVE - BOOM, TURNING MOTOR & TANK
128.	CONTROL VALVE - SWIVEL JOINT
129.	TRAVEL FRAME
130.	BOOM (1)
131.	BOOM (2)(STANDARD ARM SPEC.)
132.	BOOM (2)(LONG ARM SPEC.)
133.	BOOM (3)
134.	P.T.O.(FRAME END)
135.	P.T.O.(ARM END)
136.	P.T.O.(ARM END)(LONG ARM)
137.	QUICK COUPLER

Fig. No.	Fig. Name
138.	CONTROL PIPING(CONTROL VALVE - SOLENOID VALVE)
139.	CONTROL PIPING(CONTROL VALVE - 4-WAY VALVE)
140.	CONTROL PIPING(2-WAY VALVE - REMOTE CONTROL VALVE)
141.	CONTROL PIPING(TRAVEL & SWING PEDAL)
142.	CONTROL PIPING(P.T.O.)
143.	GREASING(TURNING FRAME)
144.	GREASING(BOOM)

IMPLEMENT

145.	BOOM BRACKET
146.	BOOM
147.	ARM
148.	LONG ARM
149.	BUCKET ARM & LINK
150.	QUICK COUPLER
151.	PLUG(IMPLEMENT)
152.	BLADE

OPTIONAL & KIT

153.	LABEL KIT(FOR CANADA)(OPTIONAL)
154.	DIAL KIT FOR P.T.O. FLOW RATE ADJUSTMENT(OPTIONAL)
155.	P.T.O. 2 KIT(BOOM END)(OPTIONAL)(1/7)
156.	P.T.O. 2 KIT(BOOM END)(OPTIONAL)(2/7)
157.	P.T.O. 2 KIT(BOOM END)(OPTIONAL)(3/7)
158.	P.T.O. 2 KIT(BOOM END)(OPTIONAL)(4/7)

Contents

0CK50-M00650

Fig. No.	Fig. Name
159.	P.T.O. 2 KIT(BOOM END)(OPTIONAL)(5/7)
160.	P.T.O. 2 KIT(BOOM END)(OPTIONAL)(6/7)
161.	P.T.O. 2 KIT(BOOM END)(OPTIONAL)(7/7)
162.	P.T.O. 2 KIT(ARM END)(OPTIONAL)(1/7)
163.	P.T.O. 2 KIT(ARM END)(OPTIONAL)(2/7)
164.	P.T.O. 2 KIT(ARM END)(OPTIONAL)(3/7)
165.	P.T.O. 2 KIT(ARM END)(OPTIONAL)(4/7)
166.	P.T.O. 2 KIT(ARM END)(OPTIONAL)(5/7)
167.	P.T.O. 2 KIT(ARM END)(OPTIONAL)(6/7)
168.	P.T.O. 2 KIT(ARM END)(OPTIONAL)(7/7)
169.	ADDITIONAL WEIGHT KIT(OPTIONAL)
170.	SIDE MIRROR(LEFT)(OPTIONAL)

Fig. No.	Fig. Name

Fig.1. LABEL(EXTERIOR)(TO MAF000)

(A)=SV100-2A C(US) (D)=
(B)= (E)=
(C)= (F)=

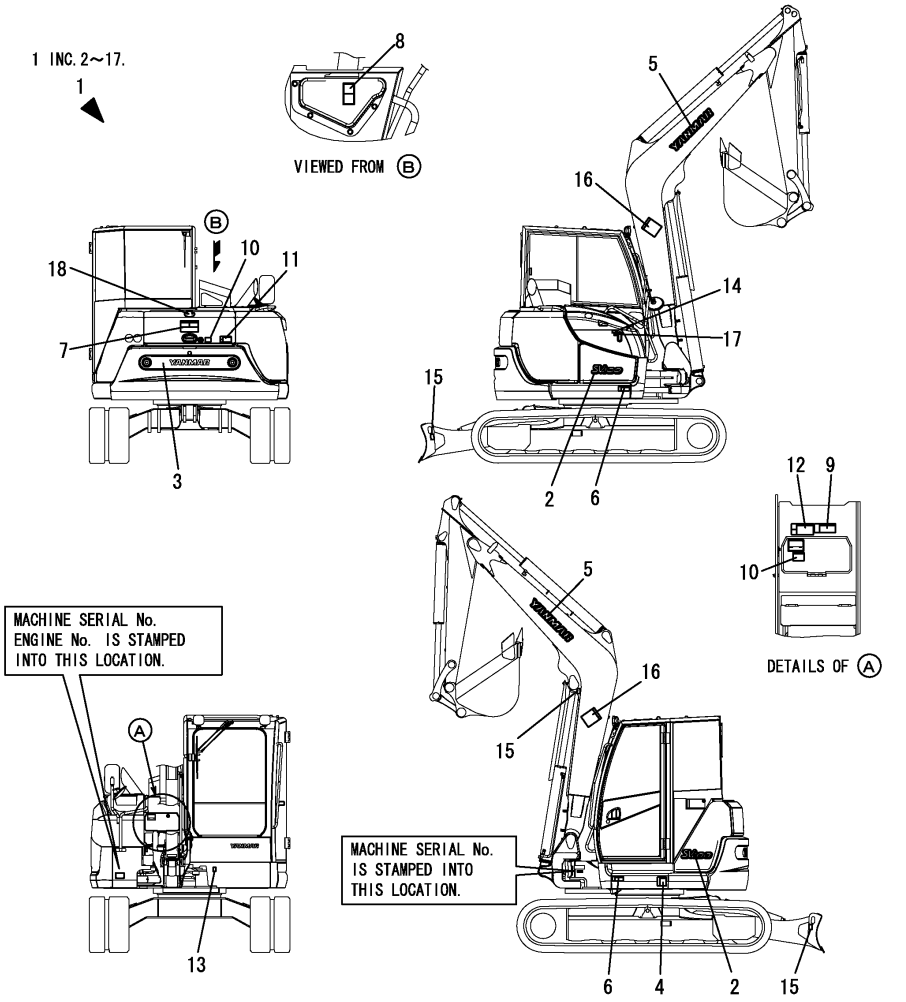

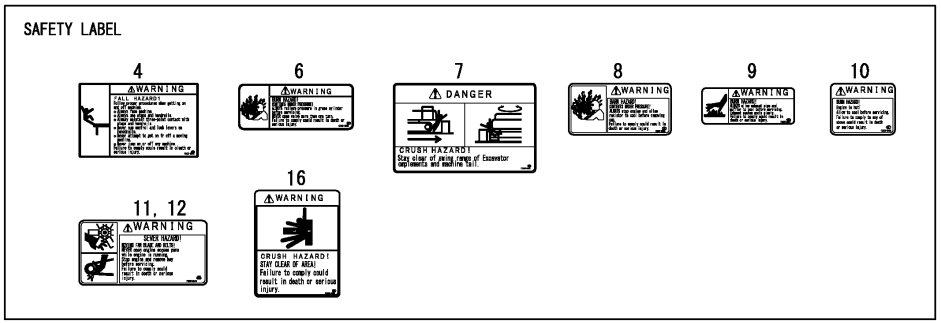

No.	Lev.	Parts No.	Description	Q'ty (A)	(B)	(C)	(D)	(E)	(F)	I	R
1	1	172B12-08120	LABEL SET,OUT EX	1							
2	2	172B12-03140	LABEL,MODEL	2							
3	2	172B11-03160	LABEL,REAR EMBLEM	1							
4	2	172472-03141	LABEL, SUPPORT	1							
5	2	172A65-03230	LABEL,YANMAR 627	2							
6	2	172437-03352	LABEL, CYLINDER	2							
7	2	172437-03381	LABEL, SWING AREA	1							
8	2	172437-03391	LABEL, RADIATOR	1							
9	2	172B03-03390	LABEL,SILENCER EX	1							
10	2	172437-03402	LABEL, ENGINE COVER	2							
11	2	172A36-03411	LABEL, ENGINE ROOM	1							
12	2	172A36-03411	LABEL, ENGINE ROOM	1							
13	2	172B03-03460	LABEL, GREASE US	1							
14	2	172437-03501	LABEL, FUEL	1							
15	2	172437-03511	LABEL, HOOK	3							
16	2	172187-03941	LABEL, BOOM US	2							
17	2	114110-07761	LABEL, FUEL OIL CAUT	1							
18	1	172A89-03500	EMBLEM ASSY	1							

N:Old $\overset{\text{Yes}}{\underset{\text{No}}{\leftrightarrow}}$ New, Q:Old $\overset{\text{No}}{\underset{\text{Yes}}{\leftrightarrow}}$ New, R:Old $\overset{\text{Yes}}{\underset{\text{Yes}}{\leftrightarrow}}$ New, S:Old $\overset{\text{No}}{\underset{\text{No}}{\leftrightarrow}}$ New, W:Add, Z:Discontinued, F:Interchangeable by set, K:Q'ty Change

Copyright (C) 2015 YANMAR CO., LTD. All RightsReserved.

Fig.182. (1A)LABEL(EXTERIOR)(FROM MAF001)

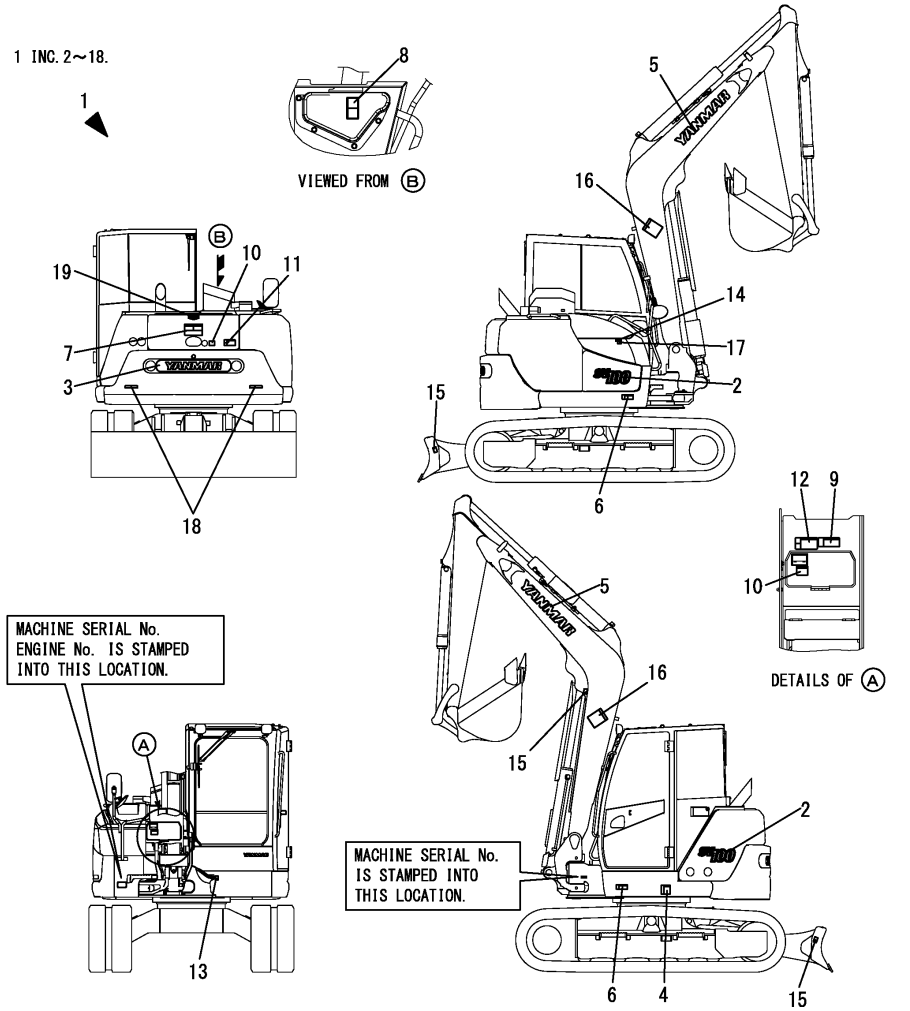

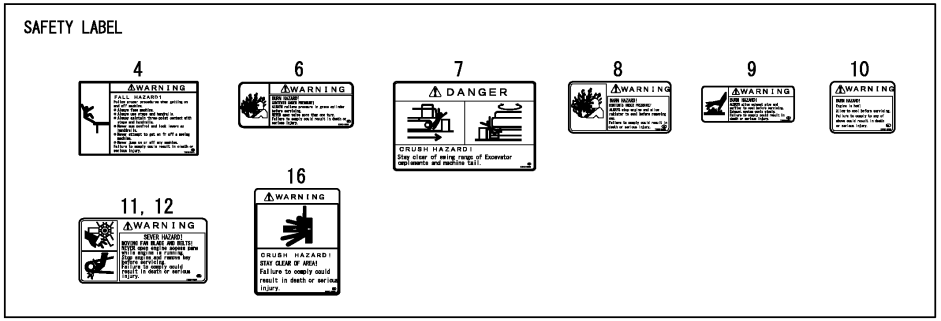

(A)=SV100-2A C(US) (D)=
(B)= (E)=
(C)= (F)=

No.	Lev.	Parts No.	Description	Q'ty (A)	(B)	(C)	(D)	(E)	(F)	I	R
1	1	172B12-08121	LABEL SET,OUT EX D	1							
2	2	172B12-03470	LABEL,MODEL SV100	2							
3	2	172B11-04790	LABEL,REAR 80	1							
4	2	172472-03141	LABEL, SUPPORT	1							
5	2	172A86-03840	LABEL,YANMAR 800 B	2							
6	2	172437-03352	LABEL, CYLINDER	2							
7	2	172437-03381	LABEL, SWING AREA	1							
8	2	172437-03391	LABEL, RADIATOR	1							
9	2	172B03-03390	LABEL,SILENCER EX	1							
10	2	172437-03402	LABEL, ENGINE COVER	2							
11	2	172A36-03411	LABEL, ENGINE ROOM	1							
12	2	172A36-03411	LABEL, ENGINE ROOM	1							
13	2	172B03-03460	LABEL, GREASE US	1							
14	2	172437-03501	LABEL, FUEL	1							
15	2	172437-03511	LABEL, HOOK	3							
16	2	172187-03941	LABEL, BOOM US	2							
17	2	114110-07761	LABEL, FUEL OIL CAUT	1							
18	2	172B04-03980	LABEL, REFLECTOR M	2							
19	1	172B36-03100	EMBLEM ASSY,FY L5 Y	1							

N:Old $\frac{\text{Yes}}{\text{No}}$ New, Q:Old $\frac{\text{No}}{\text{Yes}}$ New, R:Old $\frac{\text{Yes}}{\text{Yes}}$ New, S:Old $\frac{\text{No}}{\text{No}}$ New, W:Add, Z:Discontinued, F:Interchangeable by set, K:Q'ty Change

Copyright (C) 2015 YANMAR CO., LTD. All RightsReserved.

Fig.2. LABEL(BONNET INSIDE)

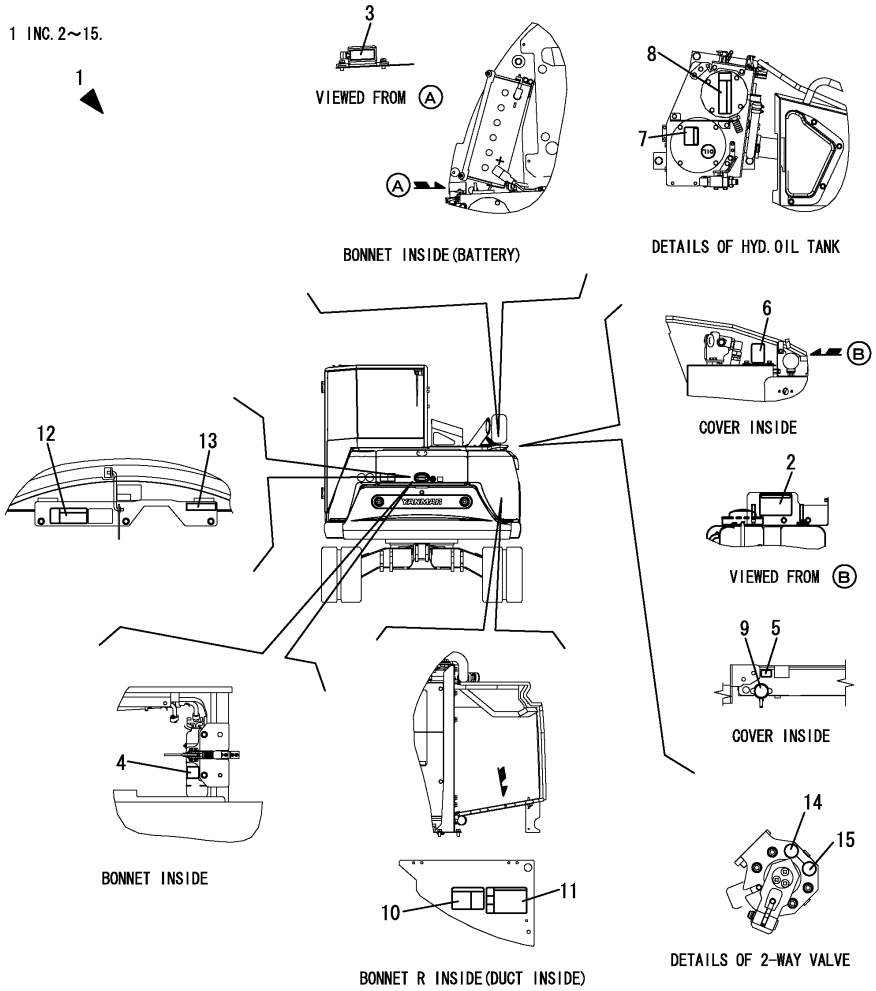

SAFETY LABEL

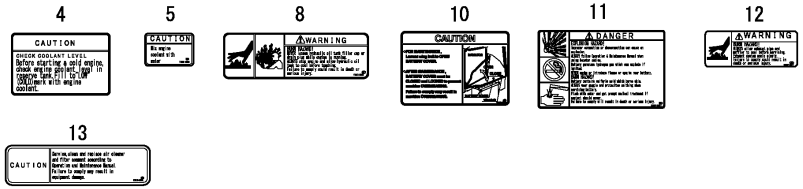

(A)=SV100-2A C(US) (D)=
(B)= (E)=
(C)= (F)=

No.	Lev.	Parts No.	Description	Q'ty (A)	(B)	(C)	(D)	(E)	(F)	I	R
1	1	172B11-08360	LABEL SET,IN US T4	1							
2	2	172A69-03130	LABEL,GREASING US	1							
3	2	172B11-03170	LABEL,LF	1							
4	2	172A38-03201	LABEL, SUB TANK	1							
5	2	172A38-03211	LABEL, ANTI-FREEZING	1							
6	2	172A69-03270	LABEL,PTO SELECT	1							
7	2	172463-03290	LABEL, HYD.OIL	1							
8	2	172437-03322	LABEL, RESEVOIR	1							
9	2	172462-03320	LABEL, RADIATOR	1							
10	2	172A69-03350	LABEL,BATTERY COVER	1							
11	2	172437-03361	LABEL, BATTERY	1							
12	2	172B03-03390	LABEL,SILENCER EX	1							
13	2	172125-03951	LABEL, AIR CLEANER	1							
14	2	172437-03610	LABEL	1							
15	2	172437-03620	LABEL	1							

N:Old $\xleftarrow[\text{No}]{\text{Yes}}$ New, Q:Old $\xleftarrow[\text{Yes}]{\text{No}}$ New, R:Old $\xleftarrow[\text{Yes}]{\text{Yes}}$ New, S:Old $\xleftarrow[\text{No}]{\text{No}}$ New, W:Add, Z:Discontinued, F:Interchangeable by set, K:Q'ty Change

Copyright (C) 2015 YANMAR CO., LTD. All RightsReserved.

Fig.3. LABEL(CABIN)(TO MAF000)

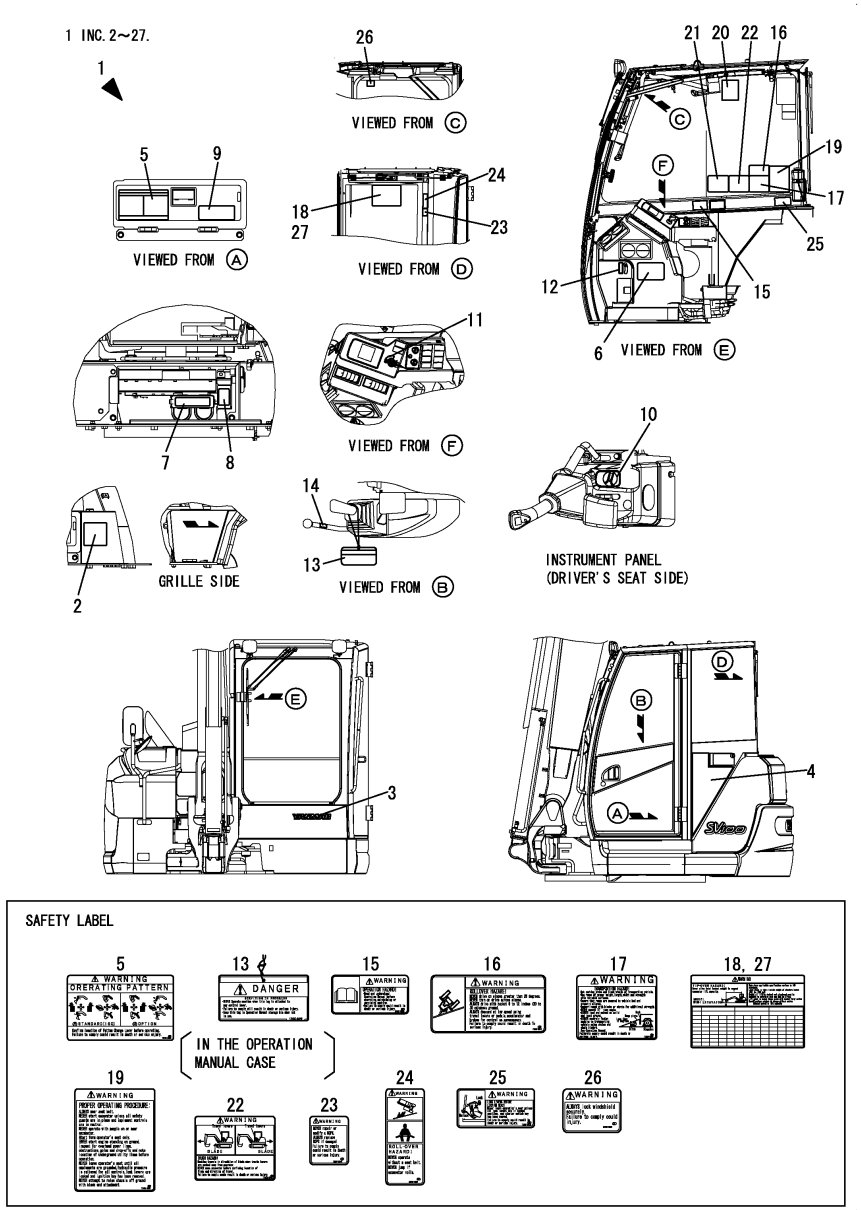

(A)=SV100-2A C(US) (D)=
(B)= (E)=
(C)= (F)=

No.	Lev.	Parts No.	Description	Q'ty (A)	(B)	(C)	(D)	(E)	(F)	I	R
1	1	172B12-08410	LABEL SET,CAB US T4	1							
2	2	172499-03280	LAVEL,ADJUST CRAWLER	1							1
3	2	172B11-03300	LABEL,BRANDLOGO 315	1							
4	2	172B11-03310	LABEL,CAB SIDE	1							
5	2	172437-03601	LABEL, 2-WAY US	1							
6	2	172B12-03110	LABEL, FEED T4	1							
7	2	172B11-03130	LABEL,RELAY BOX	1							
8	2	172B11-03150	LABEL,FUSE BOX T4	1							
9	2	172B12-03180	LABEL, SPEC US T4	1							
10	2	172A69-03220	LABEL,ACCELERATOR	1							
11	2	172B03-03220	LABEL,SW	1							
12	2	172B03-03240	LABEL,AIR SELECT	1							
13	2	172437-03252	TAG ASSY, CAUTION	1							
14	2	172183-03280	LABEL, LOCK	1							
15	2	172437-03302	LABEL, MANUAL	1							
16	2	172437-03312	LABEL, SLOPE	1							
17	2	172437-03343	LABEL, TRANSPORT	1							
18	2	172B12-03360	LABEL, LIFT Q US	1							
19	2	172437-03372	LABEL, NEUTRAL	1							
20	2	172B04-03370	LABEL, DPF EX	1							
21	2	172B11-03400	LABEL, OPERATION	1							
22	2	172437-03432	LABEL, STEERING	1							
23	2	172437-03441	LABEL, ROPS	1							
24	2	172437-03451	LABEL, SEAT BELT	1							
25	2	172437-03471	LABEL, LEVER LOCK	1							
26	2	172437-03551	LABEL, WINDOW US	1							
27	2	172B12-03930	LABEL, LIFT US LONG	1							2

Remarks
* DPF: DPF stands for DIESEL PARTICULATE FILTER.
(1)Rubber crawler specification.
(2)Long arm specification.

N:Old $\xleftarrow[\text{No}]{\text{Yes}}$ New, Q:Old $\xleftarrow[\text{Yes}]{\text{No}}$ New, R:Old $\xleftarrow[\text{Yes}]{\text{Yes}}$ New, S:Old $\xleftarrow[\text{No}]{\text{No}}$ New, W:Add, Z:Discontinued, F:Interchangeable by set, K:Q'ty Change

Copyright (C) 2015 YANMAR CO., LTD. All RightsReserved.

Fig.183. (3A)LABEL(CABIN)(FROM MAF001)

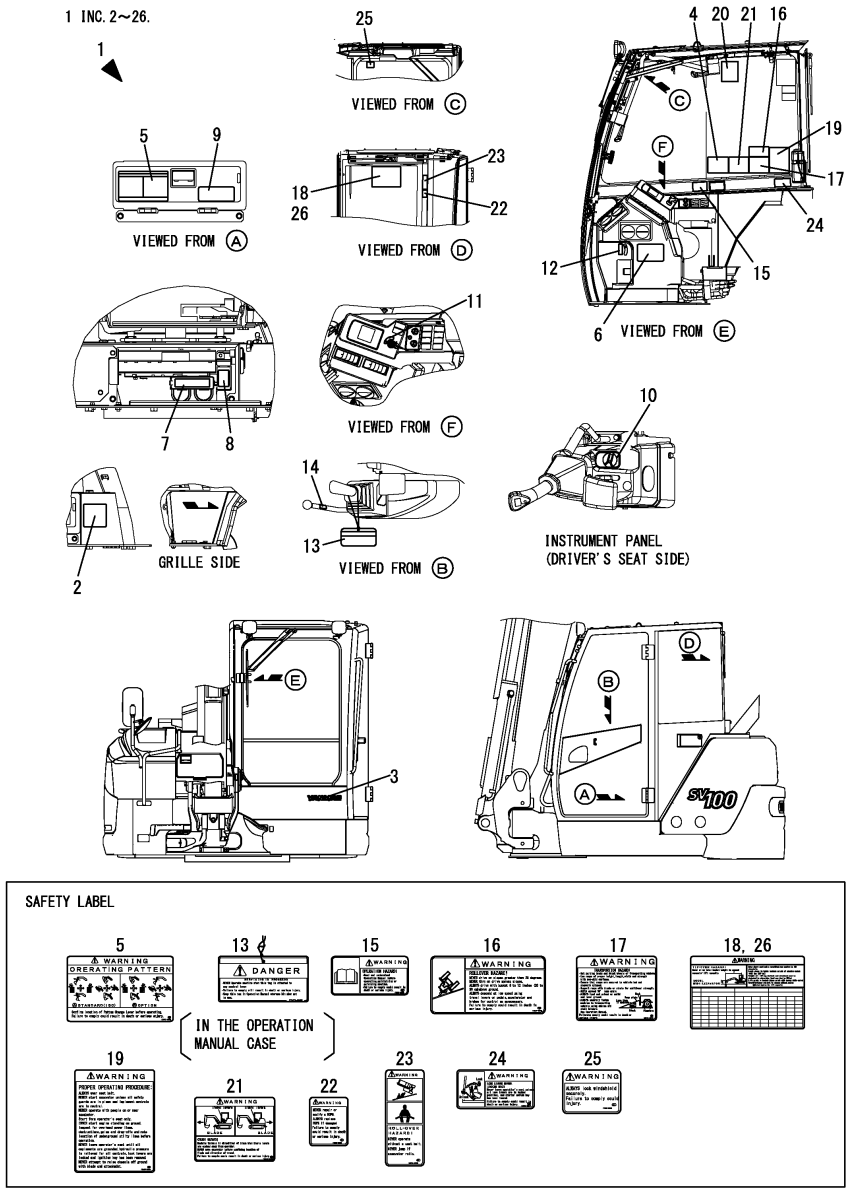

(A)=SV100-2A C(US) (D)=
(B)= (E)=
(C)= (F)=

No.	Lev.	Parts No.	Description	Q'ty (A)	(B)	(C)	(D)	(E)	(F)	I	R
1	1	172B12-08411	LABEL SET,CAB US T4D	1							
2	2	172499-03280	LAVEL,ADJUST CRAWLER	1							1
3	2	172A86-03480	LABEL,YANMAR 280 W	1							
4	2	172B11-03400	LABEL, OPERATION	1							
5	2	172437-03601	LABEL, 2-WAY US	1							
6	2	172B12-03110	LABEL, FEED T4	1							
7	2	172B11-03130	LABEL,RELAY BOX	1							
8	2	172B11-03150	LABEL,FUSE BOX T4	1							
9	2	172B12-03180	LABEL, SPEC US T4	1							
10	2	172A69-03220	LABEL,ACCELERATOR	1							
11	2	172B03-03220	LABEL,SW	1							
12	2	172B03-03240	LABEL,AIR SELECT	1							
13	2	172437-03252	TAG ASSY, CAUTION	1							
14	2	172183-03280	LABEL, LOCK	1							
15	2	172437-03302	LABEL, MANUAL	1							
16	2	172437-03312	LABEL, SLOPE	1							
17	2	172437-03343	LABEL, TRANSPORT	1							
18	2	172B12-03360	LABEL, LIFT Q US	1							
18-1	2	172B12-03381	LABEL, LIFT US	1						N	
	(A=MAF079)										
19	2	172437-03372	LABEL, NEUTRAL	1							
20	2	172B04-03370	LABEL, DPF EX	1							
21	2	172437-03432	LABEL, STEERING	1							
22	2	172437-03441	LABEL, ROPS	1							
23	2	172437-03451	LABEL, SEAT BELT	1							
24	2	172437-03471	LABEL, LEVER LOCK	1							
25	2	172437-03551	LABEL, WINDOW US	1							
26	2	172B12-03930	LABEL, LIFT US LONG	1							2
26-1	2	172B12-03931	LABEL, LIFT US LONG	1						N	
	(A=MAF079)										

Remarks
* DPF: DPF stands for DIESEL PARTICULATE FILTER.
(1)Rubber crawler specification.
(2)Long arm specification.

N:Old $\xleftarrow[\text{No}]{\text{Yes}}$ New, Q:Old $\xleftarrow[\text{Yes}]{\text{No}}$ New, R:Old $\xleftarrow[\text{Yes}]{\text{Yes}}$ New, S:Old $\xleftarrow[\text{No}]{\text{No}}$ New, W:Add, Z:Discontinued, F:Interchangeable by set, K:Q'ty Change

Copyright (C) 2015 YANMAR CO., LTD. All RightsReserved.

Fig.4. LABEL(QUICK COUPLER)

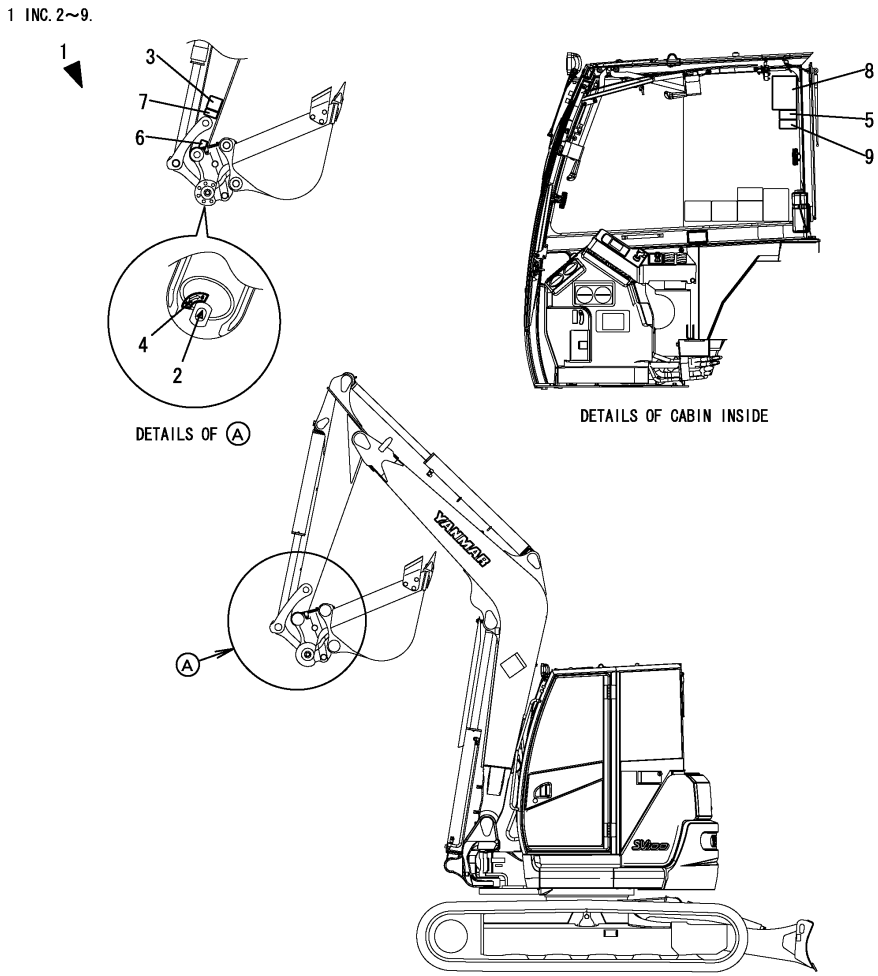

SAFETY LABEL

(A)=SV100-2A C(US) (D)=
(B)= (E)=
(C)= (F)=

No.	Lev.	Parts No.	Description	Q'ty (A)	(B)	(C)	(D)	(E)	(F)	I	R
1	1	172B03-08200	LABEL SET,Q EX	1							
2	2	172958-03160	LABEL	1							
3	2	172472-03230	LABEL, OPERATION	1							
4	2	172458-03240	LABEL, LOCK	1							
5	2	172472-03241	LABEL, PIN US	1							
6	2	172472-03261	LABEL, FINGER	1							
7	2	172472-03330	LABEL, LOCK PIN	1							
8	2	172B03-04400	LABEL,WARNING HITCH	1							
9	2	172B03-04410	LABEL,SAND US	1							

N:Old $\xleftarrow[\text{No}]{\text{Yes}}$ New, Q:Old $\xleftarrow[\text{Yes}]{\text{No}}$ New, R:Old $\xleftarrow[\text{Yes}]{\text{Yes}}$ New, S:Old $\xleftarrow[\text{No}]{\text{No}}$ New, W:Add, Z:Discontinued, F:Interchangeable by set, K:Q'ty Change

Copyright (C) 2015 YANMAR CO., LTD. All RightsReserved.

Fig.5. ACCESSORY

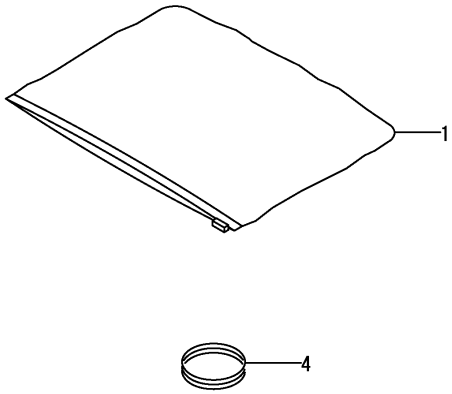

(A)=SV100-2A C(US) (D)=
(B)= (E)=
(C)= (F)=

No.	Lev.	Parts No.	Description	Q'ty (A)	(B)	(C)	(D)	(E)	(F)	I	R
1	1	172958-07330	CASE, MANUAL	1							
4	1	1C7100-99650	RING	1							

N:Old $\xleftrightarrow[\text{No}]{\text{Yes}}$ New, Q:Old $\xleftrightarrow[\text{Yes}]{\text{No}}$ New, R:Old $\xleftrightarrow[\text{Yes}]{\text{Yes}}$ New, S:Old $\xleftrightarrow[\text{No}]{\text{No}}$ New, W:Add, Z:Discontinued, F:Interchangeable by set, K:Q'ty Change

Copyright (C) 2015 YANMAR CO., LTD. All RightsReserved.

Fig.6. SILENCER

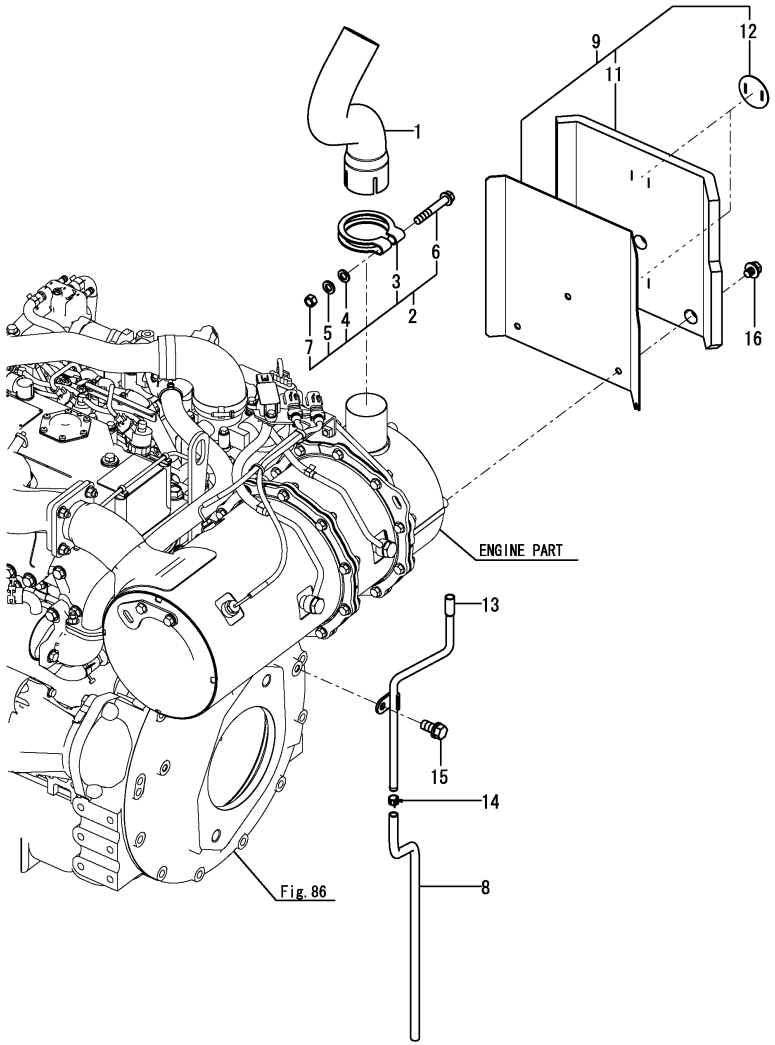

(A)=SV100-2A C(US) (D)=
(B)= (E)=
(C)= (F)=

No.	Lev.	Parts No.	Description	Q'ty (A)	(B)	(C)	(D)	(E)	(F)	I	R
1	1	172B12-11300	PIPE,EXHAUST	1							
1-1	1	172B12-11301	PIPE,EXHAUST	1						N	
	(A=M21072)										
2	1	172B11-11350	CLAMP ASSY, SILENCER	1							
3	2	172B11-11360	CLAMP	1							
4	2	22117-100000	WASHER, 10	1							
5	2	22217-100000	WASHER, SPRING 10	1						Z	
	(A=M21072)										
6	2	26106-100652	BOLT, M10X 65 PLATED	1							
7	2	26716-100002	NUT, M10	1							
7-1	2	26366-100002	NUT, M10	1						N	
	(A=M21072)										
8	1	172B12-11390	PIPE, DRAIN	1							
9	1	172B12-11410	GUARD ASSY, DPF	1							
11	2	172B12-11440	INSULATOR,EXHAUST	1							
12	2	172B11-18570	PLATE, INSURETOR	2							
13	1	172B12-13950	PIPE ASSY, DRAIN	1							
14	1	124766-59050	CLAMP, HOSE 11.5	1							
15	1	26013-100202	BOLT, SPRING M10X 20	1							
16	1	26014-080122	BOLT, M8X 12	3							

Remarks
* DPF: DPF stands for DIESEL PARTICULATE FILTER.

N:Old $\overset{\text{Yes}}{\underset{\text{No}}{\leftrightarrow}}$ New, Q:Old $\overset{\text{No}}{\underset{\text{Yes}}{\leftrightarrow}}$ New, R:Old $\overset{\text{Yes}}{\underset{\text{Yes}}{\leftrightarrow}}$ New, S:Old $\overset{\text{No}}{\underset{\text{No}}{\leftrightarrow}}$ New, W:Add, Z:Discontinued, F:Interchangeable by set, K:Q'ty Change

Copyright (C) 2015 YANMAR CO., LTD. All RightsReserved.

Fig.7. AIR CLEANER

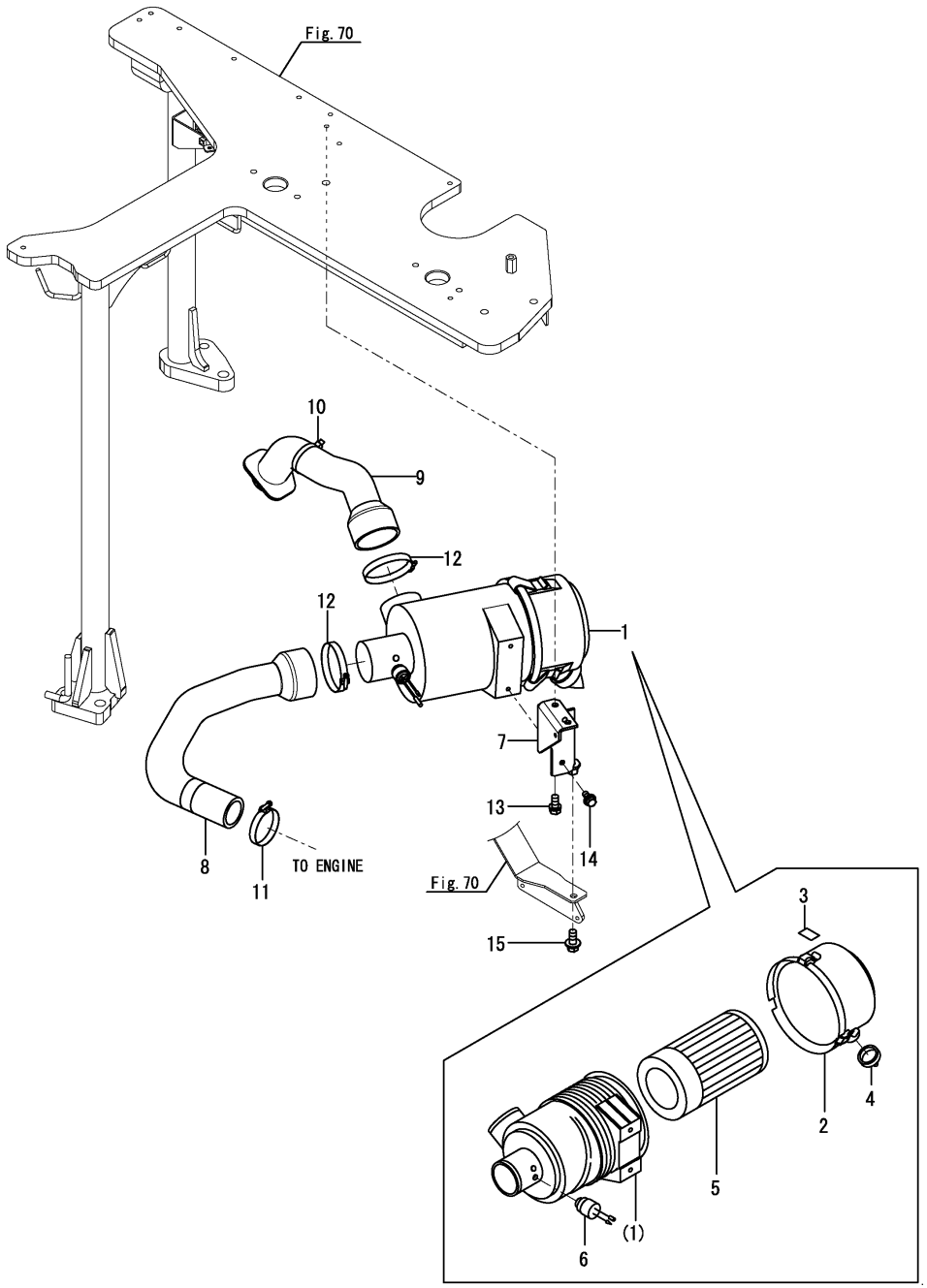

(A)=SV100-2A C(US) (D)=
(B)= (E)=
(C)= (F)=

No.	Lev.	Parts No.	Description	Q'ty (A)	(B)	(C)	(D)	(E)	(F)	I	R
1	1	172B12-11500	AIR CLEANER ASSY	1							
2	2	119160-12530	COVER ASSY	1							
3	2	129418-12530	LABEL, MARK	2							
4	2	119160-12540	VALVE	1							
5	2	119160-12560	ELEMENT, OUTER	1							
6	2	119140-12680	INDICATOR, CLEANER	1							
7	1	172B12-11530	BRACKET ASSY, CLEAN	1							
8	1	172B12-11550	HOSE,A AIR INTAKE	1							
9	1	172B12-11560	HOSE ASSY, B	1							
10	1	172122-79890	CLAMP, HOSE	1							
11	1	23000-070000	CLAMP, 70	1							
12	1	23000-090000	CLAMP, 90	2							
13	1	26013-100202	BOLT, SPRING M10X 20	2							
14	1	26014-080202	BOLT, M8X 20	2							
15	1	26014-100252	BOLT, M10X 25	1							

N:Old $\overset{\text{Yes}}{\underset{\text{No}}{\leftrightarrow}}$ New, Q:Old $\overset{\text{No}}{\underset{\text{Yes}}{\leftrightarrow}}$ New, R:Old $\overset{\text{Yes}}{\underset{\text{Yes}}{\leftrightarrow}}$ New, S:Old $\overset{\text{No}}{\underset{\text{No}}{\leftrightarrow}}$ New, W:Add, Z:Discontinued, F:Interchangeable by set, K:Q'ty Change

Copyright (C) 2015 YANMAR CO., LTD. All RightsReserved.

Fig.8. ACCELERATOR

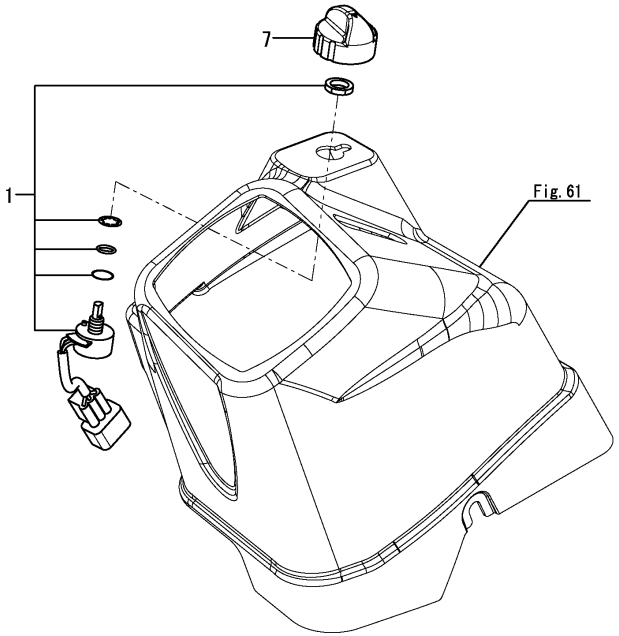

(A)=SV100-2A C(US)
(B)=
(C)=
(D)=
(E)=
(F)=

No.	Lev.	Parts No.	Description	Q'ty (A)	(B)	(C)	(D)	(E)	(F)	I	R
1	1	172A69-12100	VOLUME, ACCEL ASSY	1							
7	1	172A69-12120	KNOB ASSY	1							

N:Old $\xleftrightarrow[\text{No}]{\text{Yes}}$ New, Q:Old $\xleftrightarrow[\text{Yes}]{\text{No}}$ New, R:Old $\xleftrightarrow[\text{Yes}]{\text{Yes}}$ New, S:Old $\xleftrightarrow[\text{No}]{\text{No}}$ New, W:Add, Z:Discontinued, F:Interchangeable by set, K:Q'ty Change

Copyright (C) 2015 YANMAR CO., LTD. All RightsReserved.

Fig.9. ENGINE MOUNT

(A)=SV100-2A C(US) (D)=
(B)= (E)=
(C)= (F)=

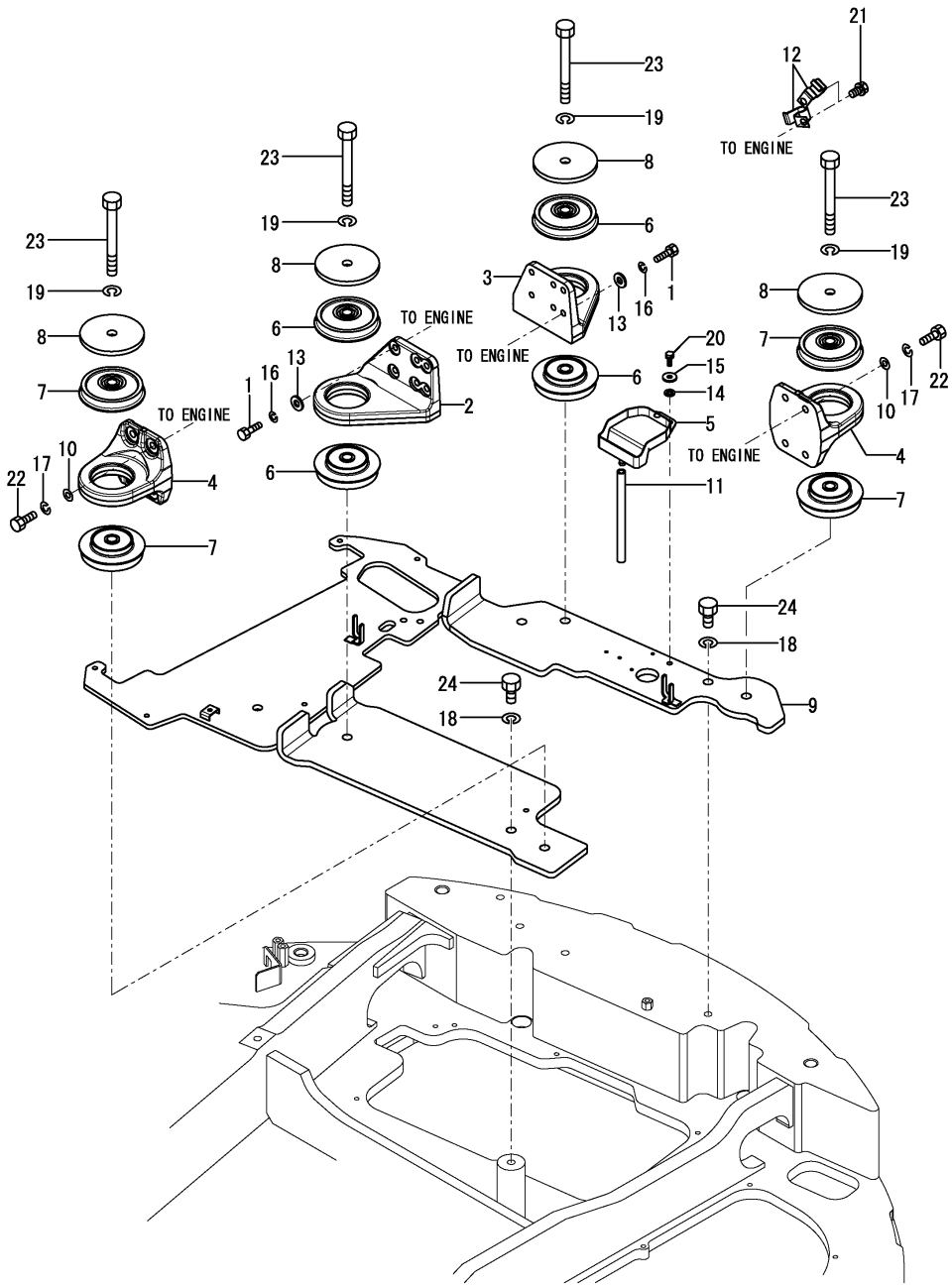

No.	Lev.	Parts No.	Description	Q'ty (A)	(B)	(C)	(D)	(E)	(F)	I	R
1	1	172A21-13100	BOLT	12							
2	1	172B11-13100	BRACKET, RR	1							
3	1	172B11-13110	BRACKET, RL	1							
4	1	172B11-13120	BRACKET, F	2							
5	1	172A89-13150	SUMP, OIL	1							
6	1	172B11-13150	MOUNT,ENGINE F	4							
7	1	172B11-13160	MOUNT,ENGINE R	4							
8	1	172B11-13170	STOPPER, 17X115X9	4							
9	1	172B12-13200	PLATE ASSY,BASE	1							
10	1	172165-13220	WASHER	8							
11	1	172137-14282	HOSE, FUEL GAUGE	1							
12	1	172112-16650	CLAMP	2							
13	1	172137-46042	SEAT, SPRING	12							
14	1	22117-060000	WASHER, 6	2							
15	1	22157-060000	WASHER, 6	2							
16	1	22217-100000	WASHER, SPRING 10	12							
17	1	22217-120000	WASHER, SPRING 12	8							
18	1	22217-160000	WASHER, SPRING 16	4							
19	1	22217-160000	WASHER, SPRING 16	4							
20	1	26013-060162	BOLT, SPRING M6X 16	2							
21	1	26013-100162	BOLT, SPRING M10X 16	2							
22	1	26076-120302	BOLT, 10.912X 30	8							
23	1	26076-161302	BOLT, 10.916X130	4							
24	1	26116-160352	BOLT, M16X 35 PLATED	4							

N:Old ◄Yes/No► New, Q:Old ◄No/Yes► New, R:Old ◄Yes/Yes► New, S:Old ◄No/No► New, W:Add, Z:Discontinued, F:Interchangeable by set, K:Q'ty Change

Copyright (C) 2015 YANMAR CO., LTD. All RightsReserved.

Fig.10. RADIATOR

(A)=SV100-2A C(US)
(B)=
(C)=
(D)=
(E)=
(F)=

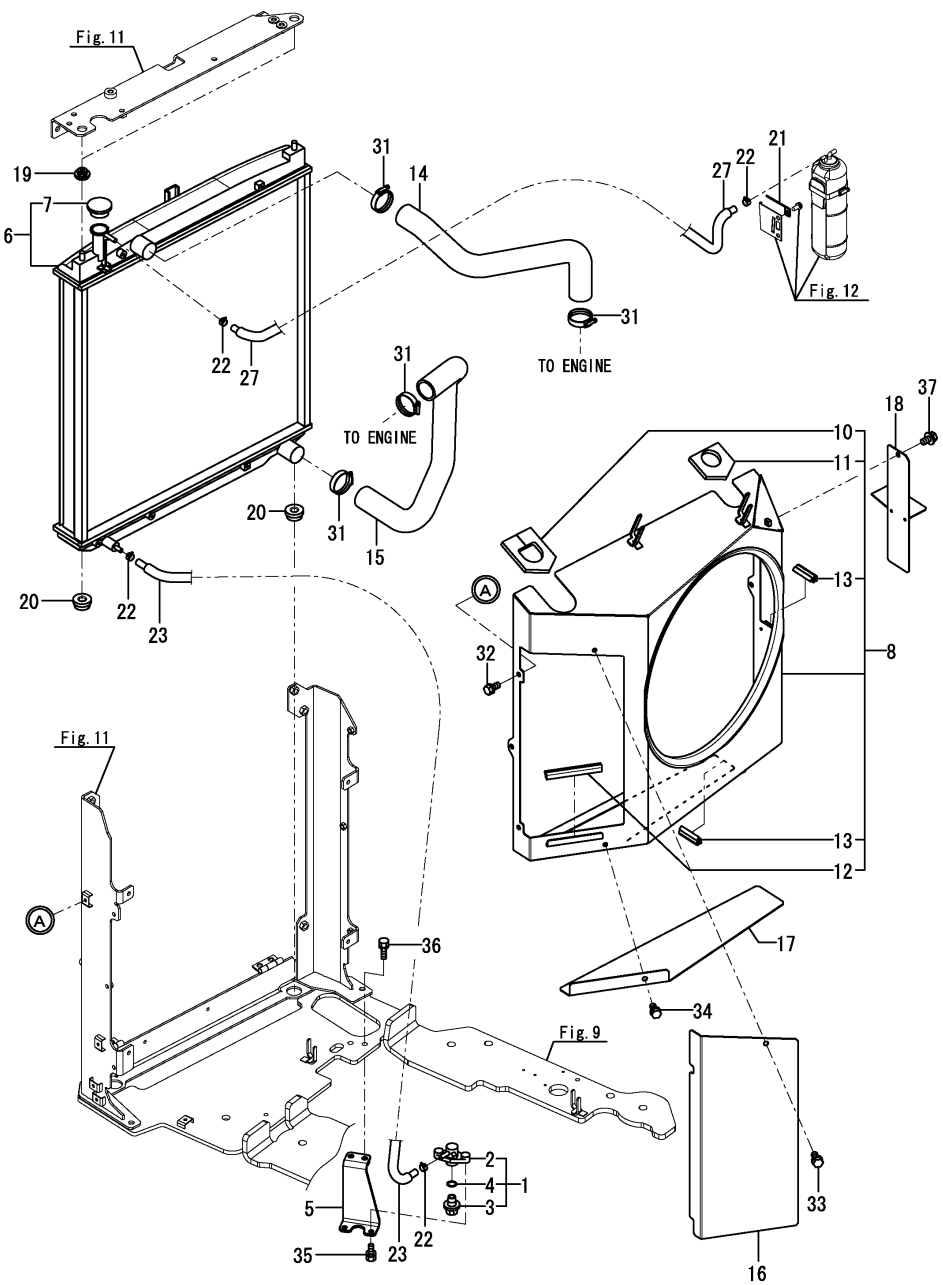

No.	Lev.	Parts No.	Description	Q'ty (A)	(B)	(C)	(D)	(E)	(F)	I	R
1	1	172444-13210	COCK ASSY, 2-WAY	1							
2	2	172444-13220	BODY	1							
3	2	121250-49121	PLUG, DRAIN M16	1							
4	2	24311-000160	O-RING, 1AP16.0	1							
5	1	172A69-13230	PLATE ASSY, COCK	1							
6	1	172B12-13300	RADIATOR ASSY	1							
7	2	172B12-13310	CAP ASSY,PRESSURE	1							
8	1	172B12-13450	SHROUD ASSY	1							
10	2	172B12-13510	SEAL,A SHROUD	1							
11	2	172B12-13520	SEAL,B SHROUD	1							
12	2	172458-61500	RUBBER, SEAL	1							
13	2	172458-61510	RUBBER, SEAL	2							
14	1	172B12-13550	HOSE,CW-T A	1							
15	1	172B12-13560	HOSE,CW-T B	1							
16	1	172A69-13760	COVER, SHROUD	1							
17	1	172A69-13770	COVER, SHROUD	1							
18	1	172A89-13820	COVER ASSY, SHROUD	1							
19	1	184016-44700	ABSORBER, SHOCK	2							
20	1	184016-44710	ABSORBER, SHOCK	2							
21	1	1A1686-57850	CLAMP, 80	1							
22	1	124766-59050	CLAMP, HOSE 11.5	4							
23	1	184015-59130	HOSE	1							
27	1	184015-59190	HOSE ASSY, FUEL	1							
31	1	23001-048000	CLAMP, HOSE 48	4							
32	1	26013-080162	BOLT, SPRING M8X 16	6							
33	1	26013-080162	BOLT, SPRING M8X 16	1							
34	1	26013-080162	BOLT, SPRING M8X 16	1							
35	1	26013-080162	BOLT, SPRING M8X 16	2							
36	1	26013-100302	BOLT, SPRING M10X 30	2							
37	1	26014-080162	BOLT, M8X 16	1							

N:Old $\xleftarrow[\text{No}]{\text{Yes}}$ New, Q:Old $\xleftarrow[\text{Yes}]{\text{No}}$ New, R:Old $\xleftarrow[\text{Yes}]{\text{Yes}}$ New, S:Old $\xleftarrow[\text{No}]{\text{No}}$ New, W:Add, Z:Discontinued, F:Interchangeable by set, K:Q'ty Change

Copyright (C) 2015 YANMAR CO., LTD. All RightsReserved.

Fig.11. RADIATOR MOUNT

(A)=SV100-2A C(US) (D)=
(B)= (E)=
(C)= (F)=

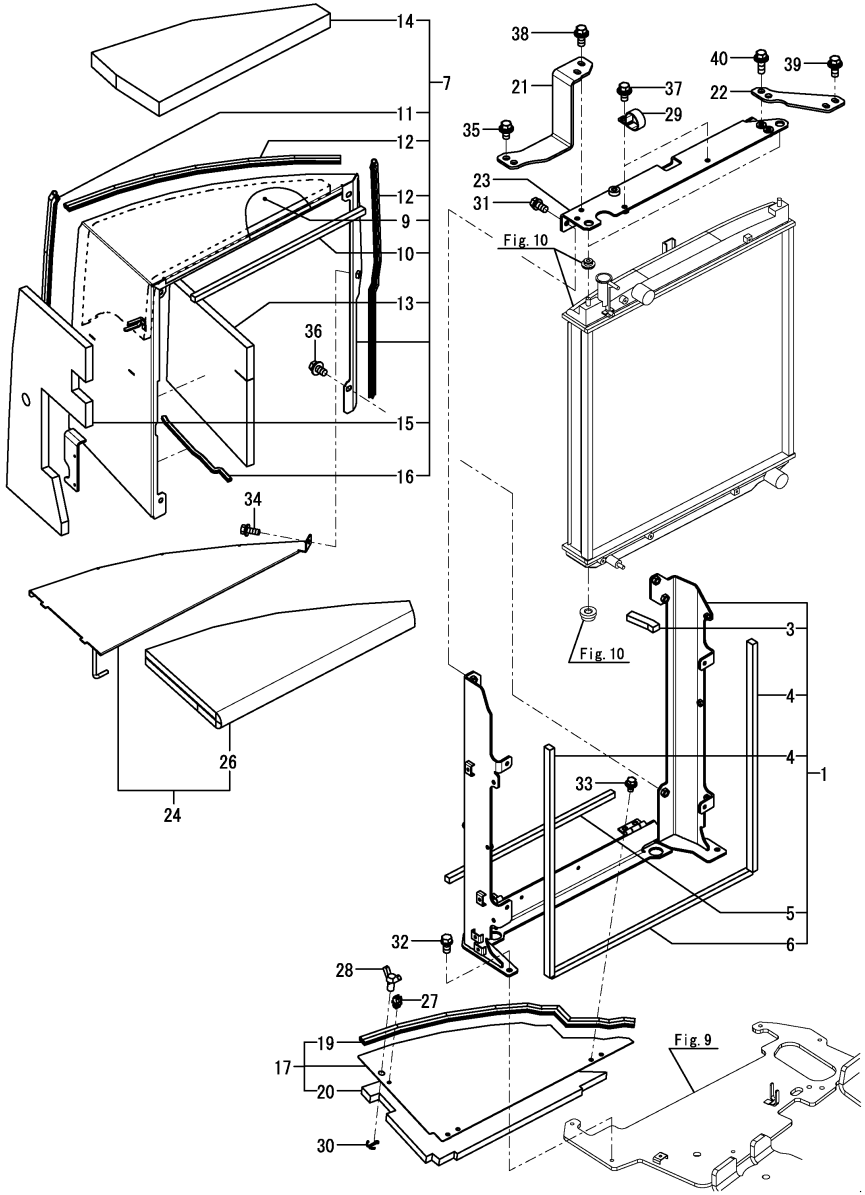

No.	Lev.	Parts No.	Description	Q'ty (A)	(B)	(C)	(D)	(E)	(F)	I	R
1	1	172B12-13350	BRACKET ASSY,RAD	1							
3	2	172B12-13380	SEAL, B	1							
4	2	172B12-13440	SEAL, A	2							
5	2	172499-13750	SEAL, DUCT	1							
6	2	172499-13760	SEAL, DUCT	1							
7	1	172B12-13600	DUCT ASSY, RADIATOR	1							
9	2	172B12-13650	SPONGE, DUCT	1							
10	2	172A69-13660	SEAL, DUCT	1							
11	2	172B12-13660	SEAL,620	1							
12	2	172B12-13670	SEAL,680	2							
13	2	172B12-13690	SPONGE,DUCT INSIDE	1							
14	2	172B12-13770	SPONGE, DUCT UP	1							
15	2	172B12-13780	SPONGE, DUCT SIDE	1							
16	2	172487-68450	TRIM	1							
17	1	172B12-13700	COVER ASSY, DUCT	1							1
19	2	172B12-13750	SEAL,720	1							
20	2	172B12-13760	SPONGE, COVER	1							
20A	1	172A69-03350	LABEL,BATTERY COVER	1							3
20B	1	172437-03361	LABEL, BATTERY	1							3
21	1	172B12-13800	STAY, A RAD	1							
22	1	172B12-13810	STAY, B RAD	1							
23	1	172B12-13850	BRACKET ASSY, RAD U	1							2
23A	1	172A38-03211	LABEL, ANTI-FREEZING	1							3
24	1	172B12-13900	PLATE ASSY,DUCT	1							
26	2	172B12-13980	SPONGE,DUCT PLATE	1							
27	1	1A7400-61250	HOLDER, ROD 8	1							
28	1	172142-62301	BOLT, WING	1							
29	1	172146-78150	PLATE, CLAMP	2							
30	1	22417-320200	PIN, COTTER 3.2X20	1							
31	1	26013-100202	BOLT, SPRING M10X 20	2							
32	1	26013-100202	BOLT, SPRING M10X 20	4							
33	1	26014-080162	BOLT, M8X 16	4							
34	1	26014-080162	BOLT, M8X 16	1							
35	1	26014-100202	BOLT, M10X 20	2							
36	1	26014-100202	BOLT, M10X 20	4							
37	1	26014-100202	BOLT, M10X 20	2							
38	1	26014-100252	BOLT, M10X 25	2							
39	1	26014-100252	BOLT, M10X 25	2							
40	1	26014-100302	BOLT, M10X 30	2							

Remarks
(1)Attach the No.20A & 20B label to this part.
(2)Attach the No.23A label to this part.
(3)Label is not illustrated.

N:Old $\xleftarrow[\text{No}]{\text{Yes}}$ New, Q:Old $\xleftarrow[\text{Yes}]{\text{No}}$ New, R:Old $\xleftarrow[\text{Yes}]{\text{Yes}}$ New, S:Old $\xleftarrow[\text{No}]{\text{No}}$ New, W:Add, Z:Discontinued, F:Interchangeable by set, K:Q'ty Change

Copyright (C) 2015 YANMAR CO., LTD. All RightsReserved.

Fig.12. SUB TANK

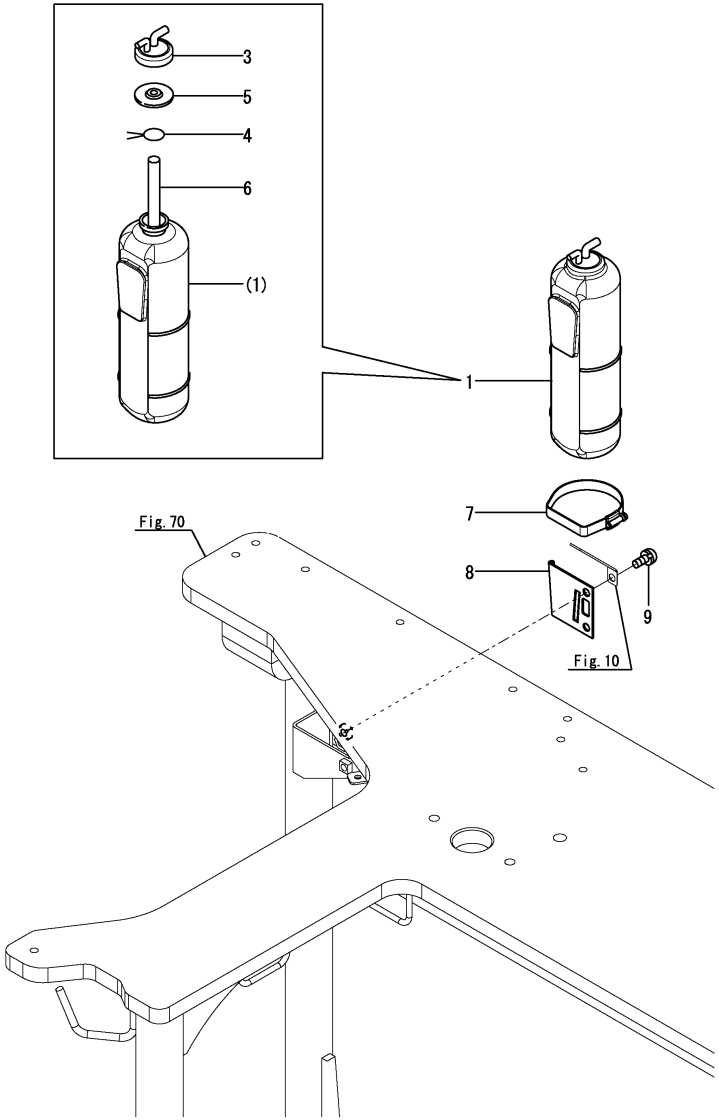

(A)=SV100-2A C(US) (D)=
(B)= (E)=
(C)= (F)=

No.	Lev.	Parts No.	Description	Q'ty (A)	(B)	(C)	(D)	(E)	(F)	I	R
1	1	171064-44510	TANK ASSY, SUB	1							1
3	2	121450-44531	CAP	1							
4	2	124450-44560	CLAMP, HOSE	1							
5	2	121470-44581	GASKET	1							
6	2	23065-070225	HOSE 7X 225	1							
6A	1	172A38-03201	LABEL, SUB TANK	1							2
7	1	124450-44550	BAND, SUB-TANK	1							
8	1	121256-44600-3	BRACKET, SUB TANK	1							
9	1	26022-080162	SCREW, M8X16	2							

Remarks
(1)Attach the No.6A label to this part.
(2)Label is not illustrated.

N:Old $\xleftarrow[\text{No}]{\text{Yes}}$ New, Q:Old $\xleftarrow[\text{Yes}]{\text{No}}$ New, R:Old $\xleftarrow[\text{Yes}]{\text{Yes}}$ New, S:Old $\xleftarrow[\text{No}]{\text{No}}$ New, W:Add, Z:Discontinued, F:Interchangeable by set, K:Q'ty Change

Copyright (C) 2015 YANMAR CO., LTD. All RightsReserved.

Fig.13. FUEL TANK

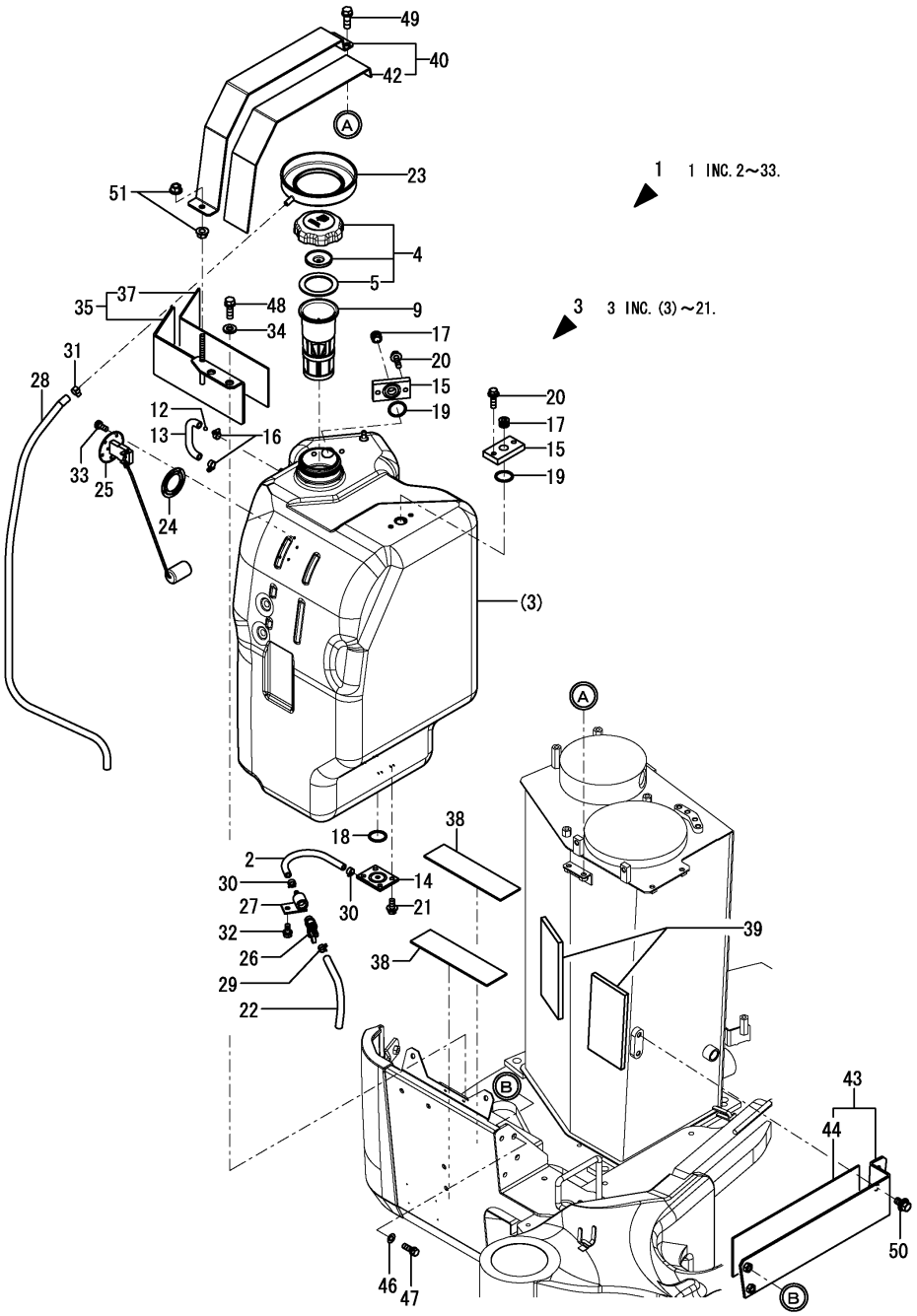

(A)=SV100-2A C(US) (D)=
(B)= (E)=
(C)= (F)=

No.	Lev.	Parts No.	Description	Q'ty (A)	(B)	(C)	(D)	(E)	(F)	I	R
1	1	772A69-14100	TANK ASSY, FUEL	1							
2	2	172137-13400	PIPE, DRAIN	1							
3	2	172A69-14110	TANK ASSY, FUEL	1							
4	3	198200-04031	CAP ASSY, FILLER	1							
5	4	198200-04040	GASKET, FUEL CAP	1							
9	3	172A69-14130	NET ASSY, FUEL	1							
12	3	172447-14160	FLOAT	1							
13	3	172458-14203	HOSE, FUEL GAUGE	1							
14	3	172A69-14211	BLOCK ASSY, DRAIN	1							
15	3	172A69-14240	PLATE	2							
16	3	23000-013000	CLAMP, 13	2							
17	3	23876-040000	PLUG, R04	2							
18	3	24311-000320	O-RING, 1AP32.0	1							
18-1	3	172A69-14550	PACKING	1						N	
	(A=*2016.01.)										
19	3	24311-000320	O-RING, 1AP32.0	2							
20	3	26013-080202	BOLT, SPRING M8X 20	4							
21	3	26013-080302	BOLT, SPRING M8X 30	4							
22	2	172186-14150	HOSE, FUEL GAUGE	1							
23	2	172A69-14170	SUMP, FUEL	1							
24	2	172162-14200	GASKET	1							
25	2	172A78-14220	GAUGE, FUEL	1							
26	2	172A69-14230	VALVE, FUEL DRAIN	1							
27	2	172444-14270	JOINT, DRAIN	1							
28	2	172187-14510	HOSE	1							
29	2	106990-44660	CLAMP, HOSE 12.5	1							
30	2	124766-59050	CLAMP, HOSE 11.5	2							
31	2	23080-013000	CLAMP, 13	1							
32	2	26013-080162	BOLT, SPRING M8X 16	1							
33	2	26022-050122	SCREW, M5X12	5							
34	1	194145-04810	WASHER, 10	2							
35	1	172A69-14310	BRACKET ASSY	1							
37	2	172A69-14350	PLATE, RUBBER	1							
38	1	172A69-14370	PLATE, RUBBER	2							
39	1	172A89-14380	SPONGE, RUBBER	2							
40	1	172A69-14410	BRACKET ASSY	1							
42	2	172A69-14430	PLATE, RUBBER	1							
43	1	172A69-14450	BRACKET ASSY	1							
44	2	172A69-14350	PLATE, RUBBER	1							
46	1	22137-100000	WASHER, 10	2							
47	1	26013-100302	BOLT, SPRING M10X 30	2							
48	1	26013-100302	BOLT, SPRING M10X 30	2							
49	1	26013-100302	BOLT, SPRING M10X 30	2							
50	1	26014-100202	BOLT, M10X 20	2							
51	1	26367-100002	NUT, M10	2							

N:Old $\overset{\text{Yes}}{\underset{\text{No}}{\leftrightarrows}}$ New, Q:Old $\overset{\text{No}}{\underset{\text{Yes}}{\leftrightarrows}}$ New, R:Old $\overset{\text{Yes}}{\underset{\text{Yes}}{\leftrightarrows}}$ New, S:Old $\overset{\text{No}}{\underset{\text{No}}{\leftrightarrows}}$ New, W:Add, Z:Discontinued, F:Interchangeable by set, K:Q'ty Change

Copyright (C) 2015 YANMAR CO., LTD. All RightsReserved.

Fig.14. FUEL PIPING

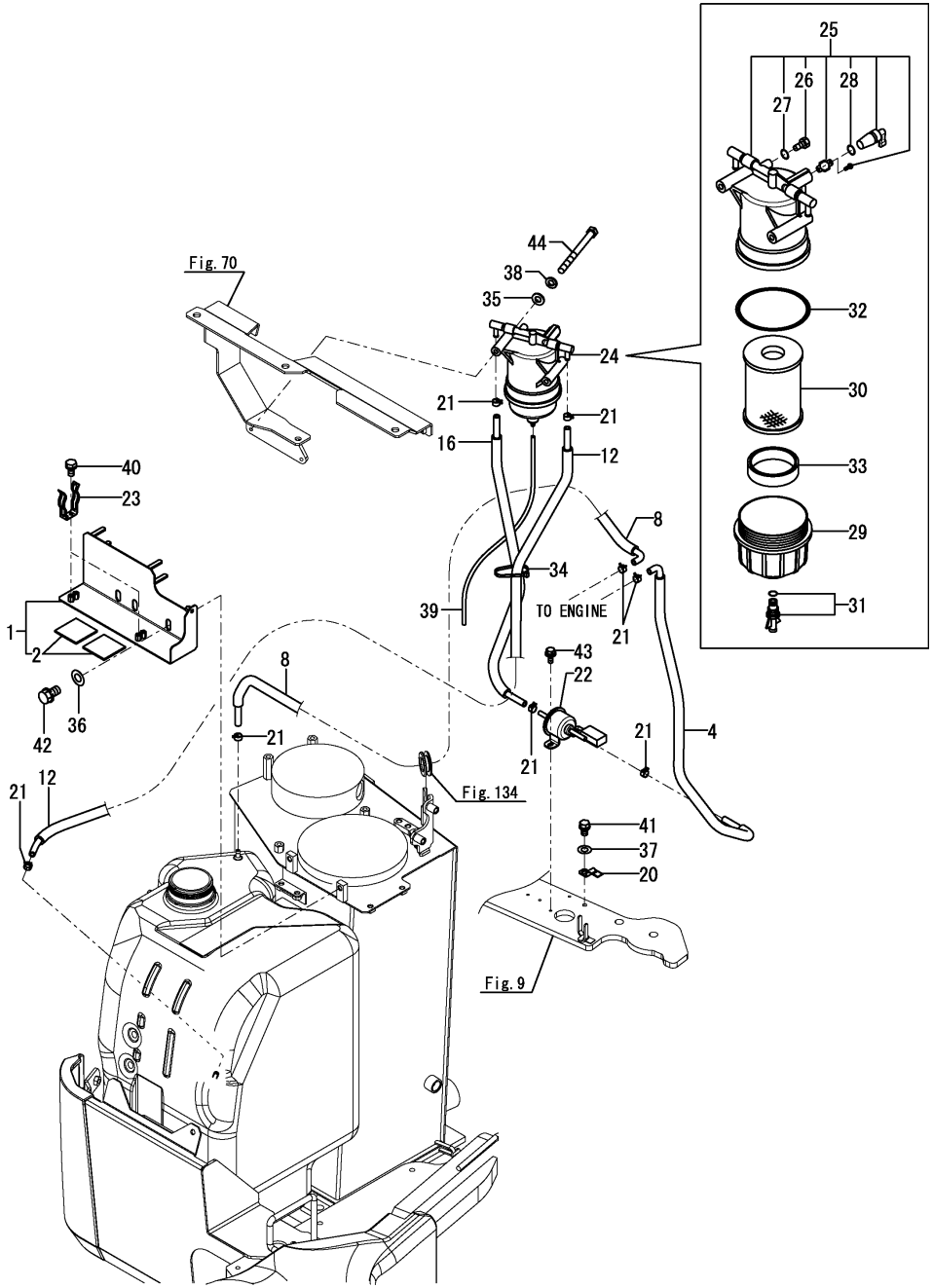

(A)=SV100-2A C(US)
(B)=
(C)=
(D)=
(E)=
(F)=

No.	Lev.	Parts No.	Description	Q'ty (A)	(B)	(C)	(D)	(E)	(F)	I	R
1	1	172B11-14510	BRACKET ASSY,GREASE	1							
2	2	172446-14250	PLATE, RUBBER	2							
4	1	172B11-14700	HOSE ASSY, 850	1							
8	1	172B12-14700	HOSE ASSY, 1800	1							
12	1	172B11-14760	HOSE ASSY, 2600	1							
16	1	172B11-14790	HOSE ASSY, 650	1							
20	1	172460-16700	STAY	1							
21	1	106990-44660	CLAMP, HOSE 12.5	8							
22	1	129612-52100	PUMP, FUEL FEED	1							
23	1	172122-55061	BRACKET, PUMP	2							
24	1	129E22-55700	FILTER ASSY, FUEL	1							
25	2	129E00-55710	BODY ASSY	1							
26	3	129A00-55750	PLUG,BREATHER	1							
27	3	129A00-55760	O-RING	1							
28	3	24311-000110	O-RING, 1AP11.0	1							
29	2	129A00-55720	CUP(CLEAR	1							
30	2	129A00-55730	ELEMENT	1							
31	2	129242-55740	PLUG, DRAIN	1							
32	2	129A00-55740	O-RING	1							
33	2	129A00-55770	FLOAT	1							
34	1	194202-56460	BAND, 200	1							
35	1	22137-080000	WASHER, 8	2							
36	1	22137-100000	WASHER, 10	2							
37	1	22137-100000	WASHER, 10	1							
38	1	22217-080000	WASHER, SPRING 8	2							
39	1	23061-050500	PIPE, 5X 500	1							
40	1	26013-060122	BOLT, SPRING M6X 12	4							
41	1	26013-100162	BOLT, SPRING M10X 16	1							
42	1	26013-100162	BOLT, SPRING M10X 16	2							
43	1	26014-060162	BOLT, M6X 16	2							
44	1	26116-080952	BOLT, M8X 95 PLATED	2							

N:Old $\xleftarrow[\text{No}]{\text{Yes}}$ New, Q:Old $\xleftarrow[\text{Yes}]{\text{No}}$ New, R:Old $\xleftarrow[\text{Yes}]{\text{Yes}}$ New, S:Old $\xleftarrow[\text{No}]{\text{No}}$ New, W:Add, Z:Discontinued, F:Interchangeable by set, K:Q'ty Change

Copyright (C) 2015 YANMAR CO., LTD. All RightsReserved.

Fig.15. AROUND THE ENGINE

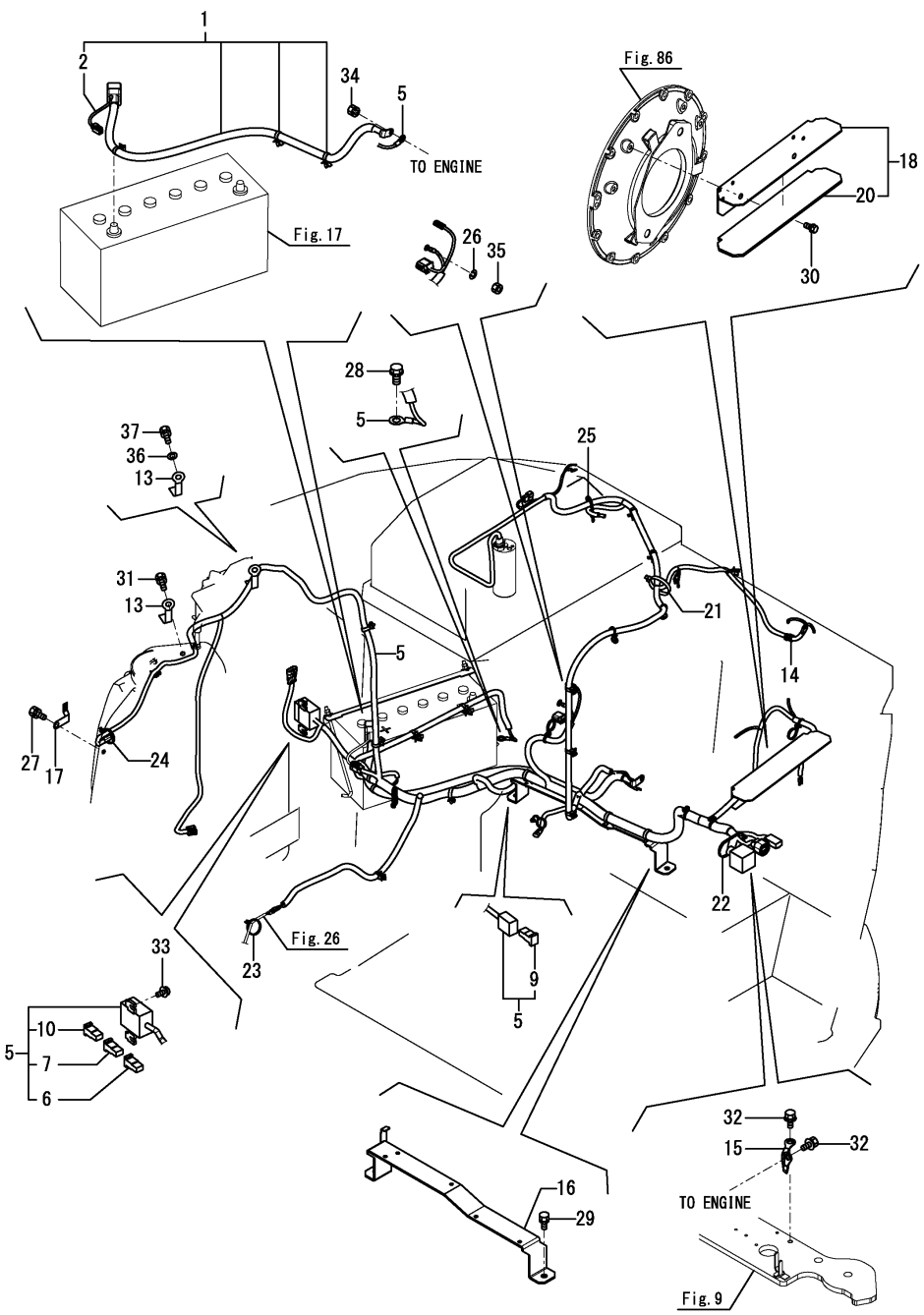

(A)=SV100-2A C(US)
(B)=
(C)=
(D)=
(E)=
(F)=

No.	Lev.	Parts No.	Description	Q'ty (A)	(B)	(C)	(D)	(E)	(F)	I	R
1	1	172B12-16100	CABLE ASSY,BATTERY +	1							
2	2	172B11-16120	HARNESS,BATTERY	1							
5	1	172B12-16501	HARNESS ASSY, A	1							
5-1	1	172B12-16502	HARNESS ASSY, A	1						N	
	(A=M21069)										
6	2	1C6900-06180	FUSE, SLOW BLOW 60A	1							
7	2	172A65-16550	FUSE, SLOWBLOW	1							
9	2	1A7810-51750	FUSE, SLOW BLOW 120A	1							
10	2	1E8940-83450	FUSE, SLOW BLOW 100A	1							
13	1	172126-16540	CLAMP	2							
14	1	172137-16560	BAND	1							
15	1	172187-16600	CORD, ENGINE EARTH	1							
16	1	172B11-16650	SUPPORT ASSY,B	1							
17	1	172A69-16700	BRACKET	1							
18	1	172B12-16750	SUPPORT ASSY,HARNESS	1							
20	2	172B12-16770	SHEET, INSULATION	1							
21	1	194202-56460	BAND, 200	1							
22	1	194202-56460	BAND, 200	1							
23	1	194202-56460	BAND, 200	1							
24	1	194202-56460	BAND, 200	1							
25	1	194202-56460	BAND, 200	1							
26	1	22217-080000	WASHER, SPRING 8	1							
27	1	26013-080162	BOLT, SPRING M8X 16	1							
28	1	26013-100162	BOLT, SPRING M10X 16	3							
29	1	26013-100202	BOLT, SPRING M10X 20	2							
30	1	26013-100202	BOLT, SPRING M10X 20	2							
31	1	26014-080162	BOLT, M8X 16	1							
32	1	26014-100162	BOLT, M10X 16	2							
33	1	26023-060122	SCREW, M6X12	2							
34	1	26051-080002	NUT, M8	1							
35	1	26716-080002	NUT, M8	1							
36	1	22137-080000	WASHER, 8	1							
37	1	26013-080122	BOLT, M8X 12	1							

N:Old $\frac{\text{Yes}}{\text{No}}$ New, Q:Old $\frac{\text{No}}{\text{Yes}}$ New, R:Old $\frac{\text{Yes}}{\text{Yes}}$ New, S:Old $\frac{\text{No}}{\text{No}}$ New, W:Add, Z:Discontinued, F:Interchangeable by set, K:Q'ty Change

Copyright (C) 2015 YANMAR CO., LTD. All RightsReserved.

Fig.16. AROUND THE CONTROL VALVE

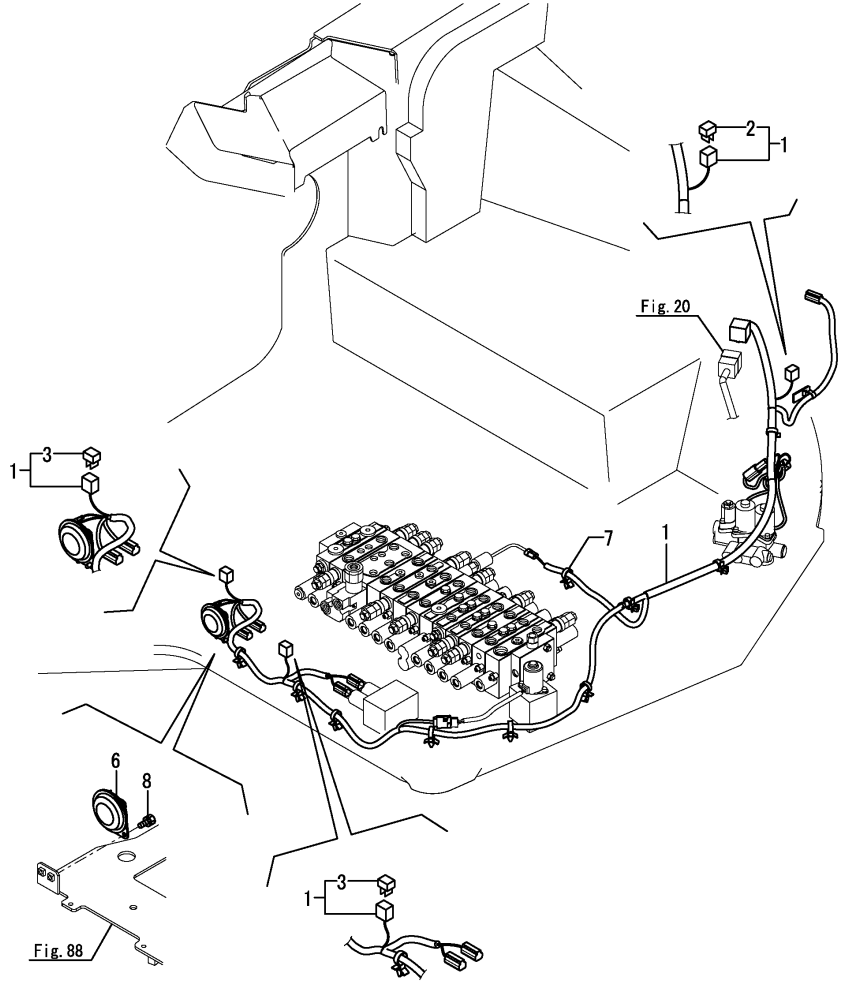

(A)=SV100-2A C(US)
(B)=
(C)=
(D)=
(E)=
(F)=

No.	Lev.	Parts No.	Description	Q'ty (A)	(B)	(C)	(D)	(E)	(F)	I	R
1	1	172B12-16620	HARNESS ASSY, D	1							
2	2	172649-16560	DIODE, 1.5-3PA	1							
3	2	1E8465-83170	DIODE, 090,1.5A	2							
6	1	194151-57100	HORN	1							
7	1	1E8775-84120	CLAMP, BAND	1							
8	1	26013-060122	BOLT, SPRING M6X 12	2							

N:Old $\xleftarrow[\text{No}]{\text{Yes}}$ New, Q:Old $\xleftarrow[\text{Yes}]{\text{No}}$ New, R:Old $\xleftarrow[\text{Yes}]{\text{Yes}}$ New, S:Old $\xleftarrow[\text{No}]{\text{No}}$ New, W:Add, Z:Discontinued, F:Interchangeable by set, K:Q'ty Change

Copyright (C) 2015 YANMAR CO., LTD. All RightsReserved.

Fig.17. BATTERY

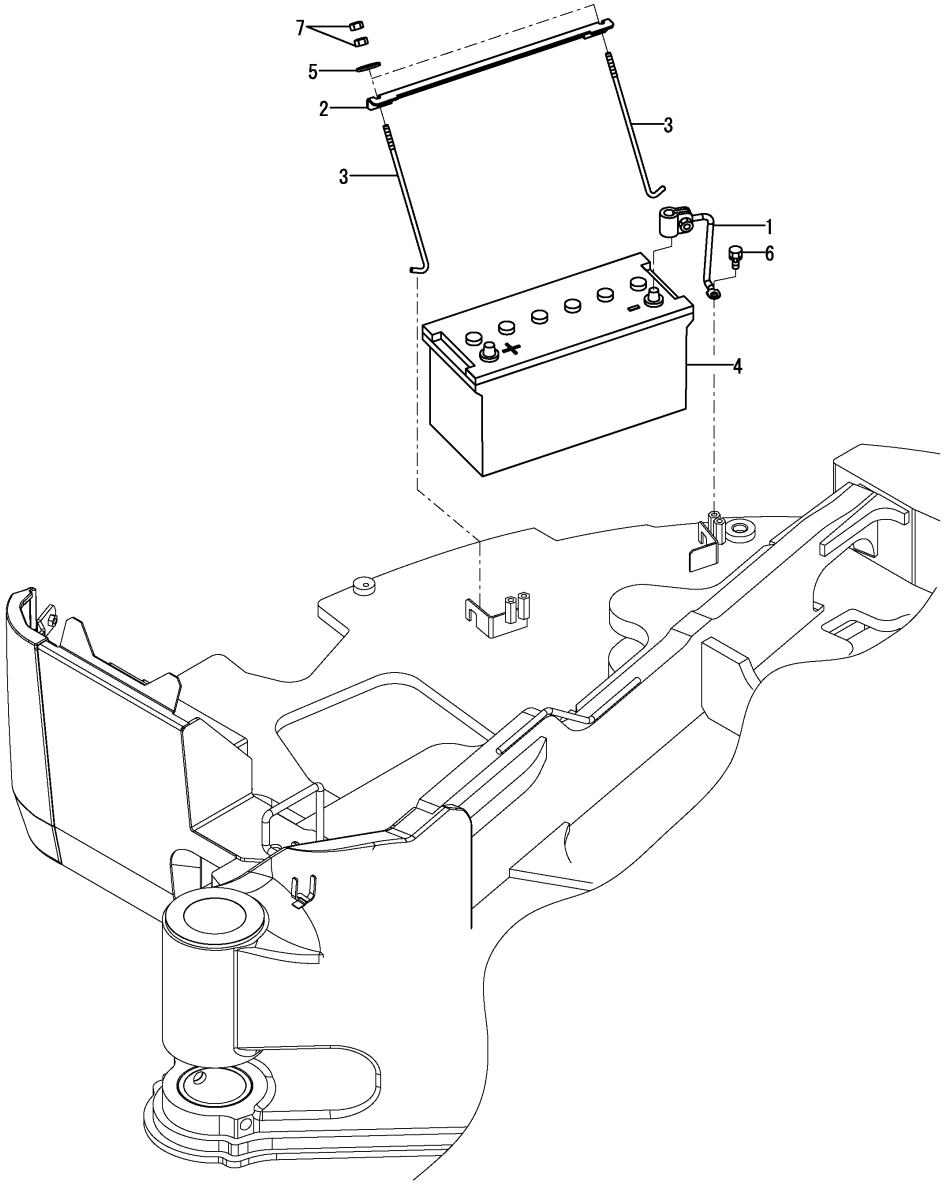

(A)=SV100-2A C(US)
(B)=
(C)=
(D)=
(E)=
(F)=

No.	Lev.	Parts No.	Description	Q'ty (A)	(B)	(C)	(D)	(E)	(F)	I	R
1	1	172187-16110	CORD, BATTERY	1							
2	1	172112-16201	RETAINER, BATTERY	1							
3	1	172164-16370	ROD	2							
4	1	1E8080-83321	BATTERY, 130E41R	1							
5	1	22157-080000	WASHER, 8	2							
6	1	26013-100162	BOLT, SPRING M10X 16	1							
7	1	26716-080002	NUT, M8	4							

N:Old $\overset{\text{Yes}}{\underset{\text{No}}{\leftrightarrows}}$ New, Q:Old $\overset{\text{No}}{\underset{\text{Yes}}{\leftrightarrows}}$ New, R:Old $\overset{\text{Yes}}{\underset{\text{Yes}}{\leftrightarrows}}$ New, S:Old $\overset{\text{No}}{\underset{\text{No}}{\leftrightarrows}}$ New, W:Add, Z:Discontinued, F:Interchangeable by set, K:Q'ty Change

Copyright (C) 2015 YANMAR CO., LTD. All RightsReserved.

Fig.18. DUMMY CONNECTOR

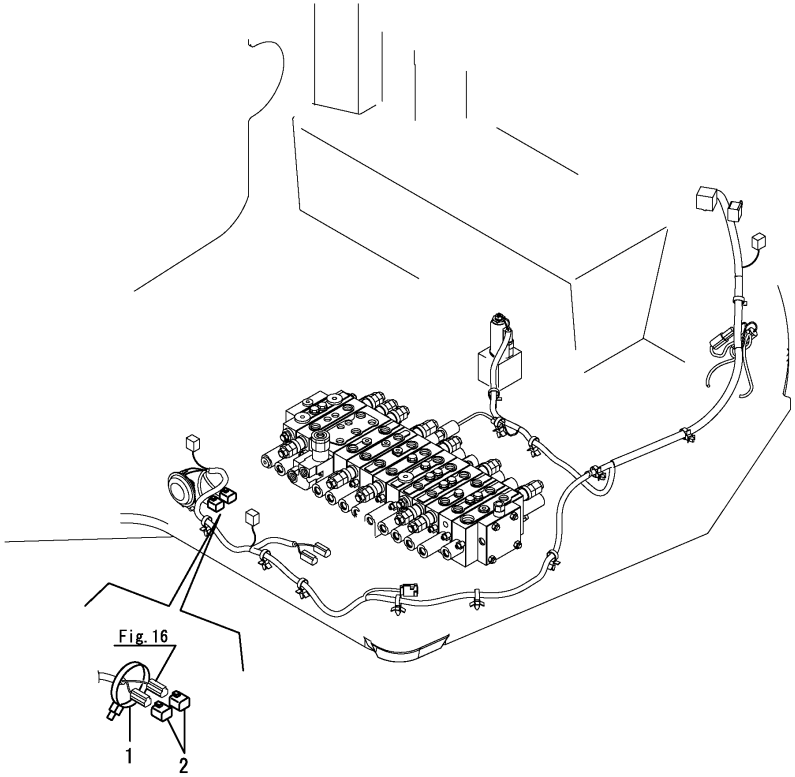

(A)=SV100-2A C(US)
(B)=
(C)=
(D)=
(E)=
(F)=

No.	Lev.	Parts No.	Description	Q'ty (A)	(B)	(C)	(D)	(E)	(F)	I	R
1	1	172126-11510	BAND	1							
2	1	172A69-16480	CONNECTOR,DUMMY	2							

N:Old $\xleftarrow[\text{No}]{\text{Yes}}$ New, Q:Old $\xleftarrow[\text{Yes}]{\text{No}}$ New, R:Old $\xleftarrow[\text{Yes}]{\text{Yes}}$ New, S:Old $\xleftarrow[\text{No}]{\text{No}}$ New, W:Add, Z:Discontinued, F:Interchangeable by set, K:Q'ty Change

Copyright (C) 2015 YANMAR CO., LTD. All RightsReserved.

Fig.19. COUPLER

(A)=SV100-2A C(US)
(B)=
(C)=
(D)=
(E)=
(F)=

No.	Lev.	Parts No.	Description	Q'ty (A)	(B)	(C)	(D)	(E)	(F)	I	R
1	1	172B11-16840	COUPLER, SWP 12F	1							
2	1	172B11-16850	COUPLER, SWP 8F	1							
3	1	172B11-16810	COUPLER,282105-1	2							

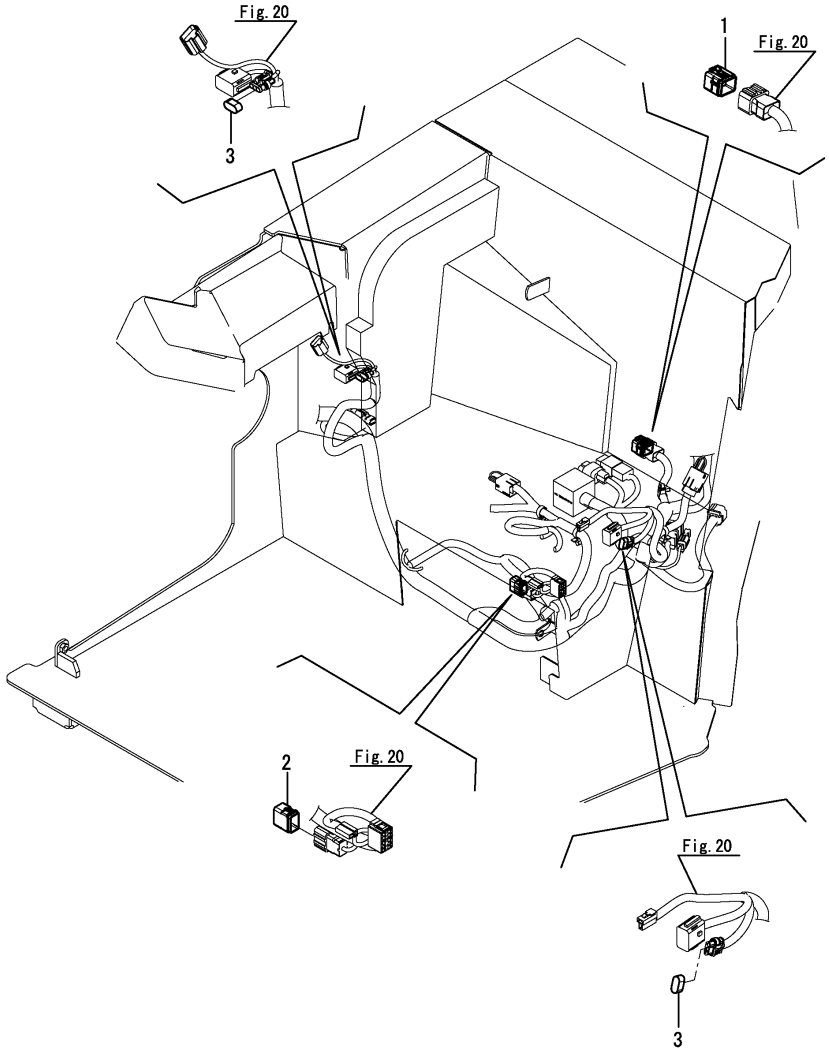

N:Old $\xleftrightarrow[\text{No}]{\text{Yes}}$ New, Q:Old $\xleftrightarrow[\text{Yes}]{\text{No}}$ New, R:Old $\xleftrightarrow[\text{Yes}]{\text{Yes}}$ New, S:Old $\xleftrightarrow[\text{No}]{\text{No}}$ New, W:Add, Z:Discontinued, F:Interchangeable by set, K:Q'ty Change

Copyright (C) 2015 YANMAR CO., LTD. All RightsReserved.

Fig.20. SEAT MOUNT

(A)=SV100-2A C(US) (D)=
(B)= (E)=
(C)= (F)=

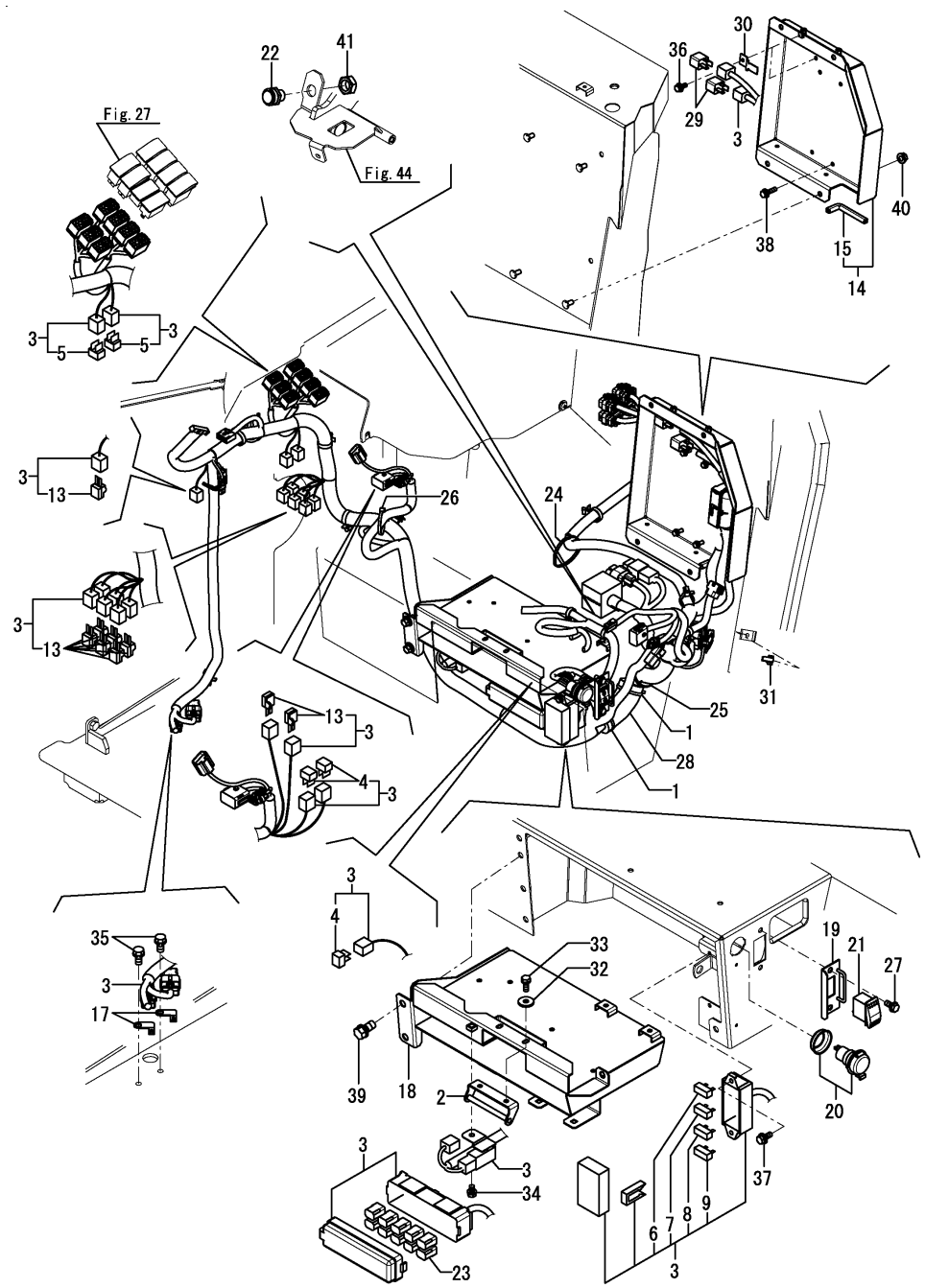

No.	Lev.	Parts No.	Description	Q'ty (A)	(B)	(C)	(D)	(E)	(F)	I	R
1	1	172126-11510	BAND	2							
2	1	172B11-16350	CATCH ASSY, LOCK	1							
3	1	172B12-16440	HARNESS ASSY, B	1							
4	2	172649-16560	DIODE, 1.5-3PA	3							
5	2	1A6382-51510	RESISTANCE, 2W R120	2							
6	2	198535-52110	FUSE, 5A	8							
7	2	198535-52120	FUSE, 10A	4							
8	2	198535-52140	FUSE, 20A	6							
9	2	198535-52170	FUSE, 30A	4							
13	2	1E8235-84910	DIODE, 090 31	9							
14	1	172B11-16601	BRACKET ASSY, E-ECU	1							
15	2	172456-13470	RUBBER 100	1							
17	1	172A69-16700	BRACKET	2							
18	1	172B11-16900	BRACKET ASSY,CR	1							
19	1	172A89-17180	PLATE ASSY,SWITCH	1							
20	1	172A64-17250	SOCKET ASSY	1							
21	1	172A69-17260	SWITCH, ENGINE STOP	1							
22	1	194464-52190	SWITCH, START	1							
23	1	1A7522-52950	RELAY, ACM13221M19	10							
24	1	194202-56460	BAND, 200	1							
25	1	194202-56460	BAND, 200	1							
26	1	194202-56460	BAND, 200	1							
27	1	172519-63240	BOLT	2							
28	1	172445-68650	SPONGE, HOSE	1							
29	1	129927-77900	RELAY, ISO 90A	2							
30	1	129927-77910	BRACKET, CONNECTOR	2							
31	1	1E8490-84130	CLAMP, BAND	1							
32	1	22157-060000	WASHER, 6	2							
33	1	26013-060122	BOLT, SPRING M6X 12	2							
34	1	26013-080122	BOLT, SPRING M8X 12	1							
35	1	26013-080162	BOLT, SPRING M8X 16	2							
36	1	26014-060162	BOLT, M6X 16	2							
37	1	26014-060162	BOLT, M6X 16	2							
38	1	26014-060252	BOLT, M6X 25	4							
39	1	26014-100202	BOLT, M10X 20	3							
40	1	26051-080002	NUT, M8	4							
41	1	26776-180002	NUT, LOCK M18	1							

N:Old $\frac{\text{Yes}}{\text{No}}$ New, Q:Old $\frac{\text{No}}{\text{Yes}}$ New, R:Old $\frac{\text{Yes}}{\text{Yes}}$ New, S:Old $\frac{\text{No}}{\text{No}}$ New, W:Add, Z:Discontinued, F:Interchangeable by set, K:Q'ty Change

Copyright (C) 2015 YANMAR CO., LTD. All RightsReserved.

Fig.21. STARTER SWITCH

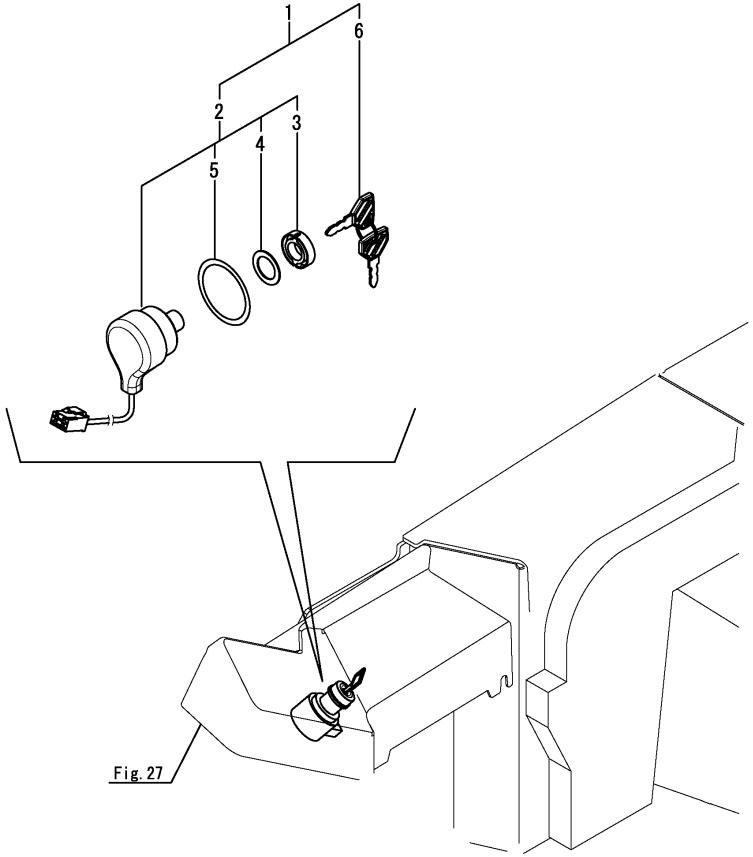

(A)=SV100-2A C(US)
(B)=
(C)=
(D)=
(E)=
(F)=

No.	Lev.	Parts No.	Description	Q'ty (A)	(B)	(C)	(D)	(E)	(F)	I	R
1	1	172B11-17100	SWITCH ASSY, STARTER	1							
2	2	172B11-17110	CYLINDER ASSY, KEY	1							
3	3	172B11-17120	NUT, RING	1							
4	3	172B11-17130	WASHER	1							
5	3	172B11-17140	O-RING	1							
6	2	198360-52160	KEY ASSY, SPARE	1							

N:Old $\xleftrightarrow[\text{No}]{\text{Yes}}$ New, Q:Old $\xleftrightarrow[\text{Yes}]{\text{No}}$ New, R:Old $\xleftrightarrow[\text{Yes}]{\text{Yes}}$ New, S:Old $\xleftrightarrow[\text{No}]{\text{No}}$ New, W:Add, Z:Discontinued, F:Interchangeable by set, K:Q'ty Change

Copyright (C) 2015 YANMAR CO., LTD. All RightsReserved.

Fig.22. QUICK COUPLER(SWITCH BOX)

(A)=SV100-2A C(US) (D)=
(B)= (E)=
(C)= (F)=

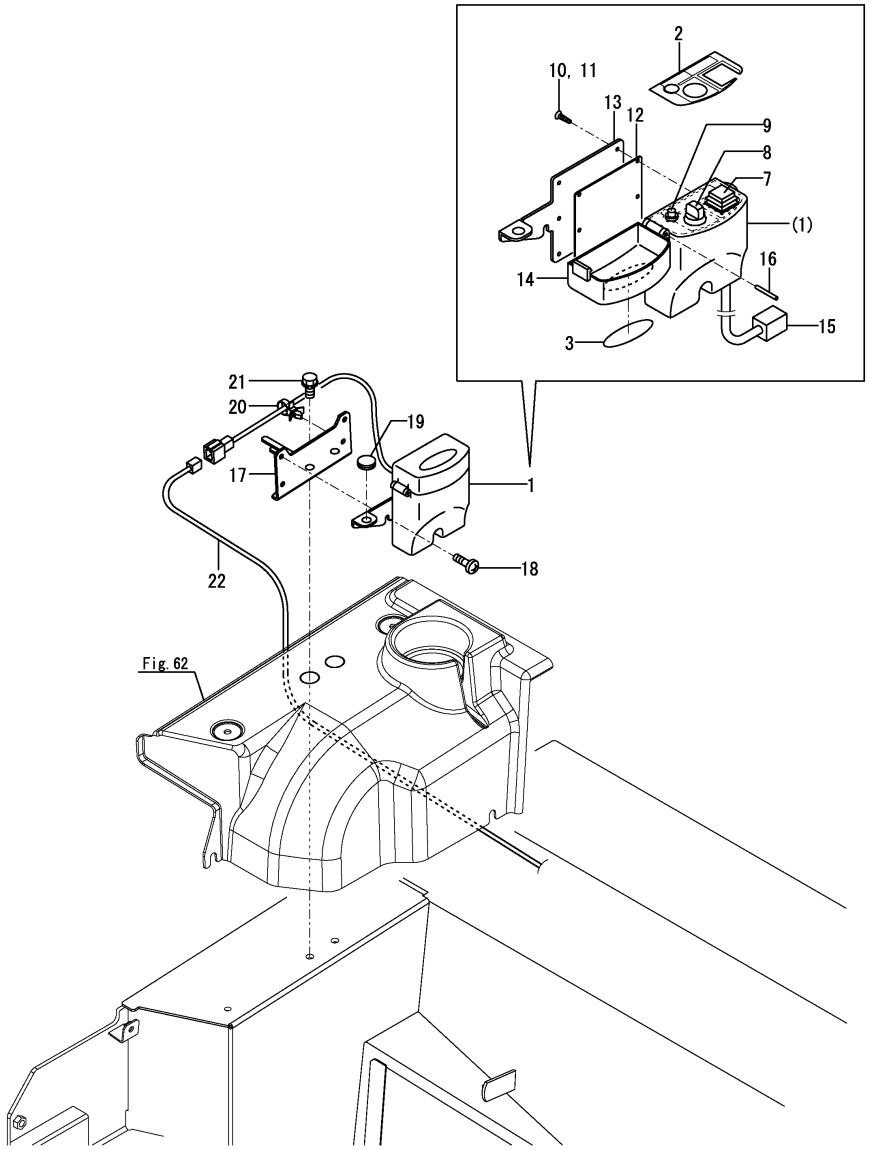

No.	Lev.	Parts No.	Description	Q'ty (A)	(B)	(C)	(D)	(E)	(F)	I	R
1	1	172958-17111	BOX,SWITCH EX	1							1
1-1	1	172958-17410	BOX,SWITCH EX D	1						S	2
	(A=MAF001)										
2	2	172472-03290	LABEL, SWITCH	1							
3	2	172472-03300	LABEL, COVER	1							
7	3	172958-17140	SWITCH ASSY	1							
8	3	172958-17150	SWITCH ASSY	1							
9	3	172958-17160	LAMP, INDICATOR	1							
10	3	172958-17170	SCREW, TAPPING	6							
11	3	172958-17180	SCREW, TAPPING	2							
12	3	172958-17190	PACKING	1							
13	3	172958-17200	BRACKET	1							
14	3	172958-17210	CASE	1							1
14-1	3	172958-17230	CASE,UPPER	1						S	2
	(A=MAF001)										
15	3	172958-17220	CORD	1							
16	3	22351-030028	PIN, SPRING 3.0X28	1							
17	1	172A89-17150	QH BRACKET ASSY	1							
18	1	172137-46210	SCREW	2							
19	1	172187-64900	PLUG	1							
20	1	1E8775-84120	CLAMP, BAND	1							
21	1	26013-100252	BOLT, SPRING M10X 25	2							
22	1	172B11-16270	HARNESS,QH	1							

Remarks
(1)Color = DARK OLIVE GRAY.
(2)Color = PANTONE 425C.

N:Old ◄Yes/No► New, Q:Old ◄No/Yes► New, R:Old ◄Yes/Yes► New, S:Old ◄No/No► New, W:Add, Z:Discontinued, F:Interchangeable by set, K:Q'ty Change

Copyright (C) 2015 YANMAR CO., LTD. All RightsReserved.

Fig.23. TRAVEL ALARM

(A)=SV100-2A C(US)
(B)=
(C)=
(D)=
(E)=
(F)=

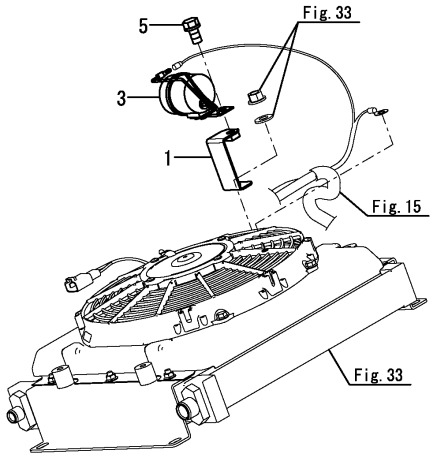

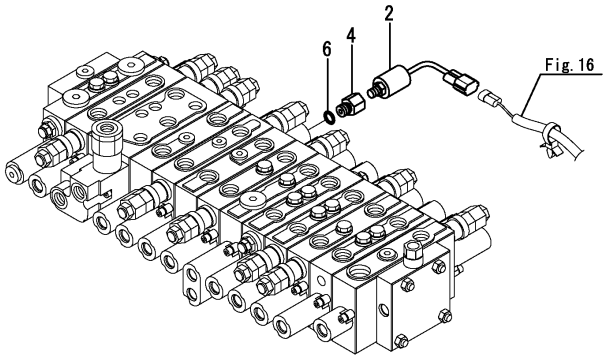

No.	Lev.	Parts No.	Description	Q'ty (A)	(B)	(C)	(D)	(E)	(F)	I	R
1	1	172B11-16880	BRACKET ASSY, BUZZER	1							
2	1	172478-17201	SWITCH, PRESSURE	1							
3	1	172511-17351	BUZZER, BACK	1							
4	1	172156-76110	CONNECTOR,PF1/4PT1/8	1							
5	1	26013-080162	BOLT, SPRING M8X 16	1							
6	1	41851-000110	O-RING	1							

N:Old ◄Yes/No► New, Q:Old ◄No/Yes► New, R:Old ◄Yes/Yes► New, S:Old ◄No/No► New, W:Add, Z:Discontinued, F:Interchangeable by set, K:Q'ty Change

Copyright (C) 2015 YANMAR CO., LTD. All RightsReserved.

Fig.24. HYD. OIL SWITCH

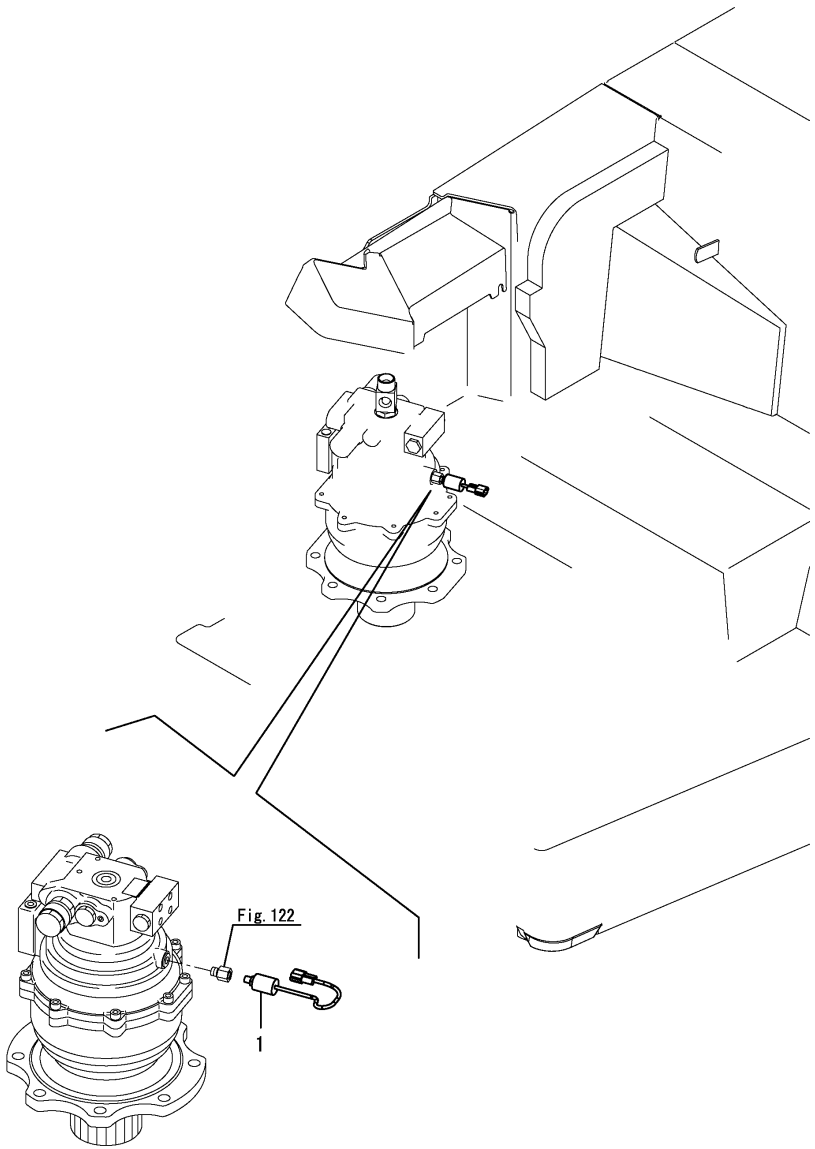

(A)=SV100-2A C(US)
(B)=
(C)=
(D)=
(E)=
(F)=

No.	Lev.	Parts No.	Description	Q'ty (A)	(B)	(C)	(D)	(E)	(F)	I	R
1	1	172478-17201	SWITCH, PRESSURE	1							

N:Old $\xleftrightarrow[\text{No}]{\text{Yes}}$ New, Q:Old $\xleftrightarrow[\text{Yes}]{\text{No}}$ New, R:Old $\xleftrightarrow[\text{Yes}]{\text{Yes}}$ New, S:Old $\xleftrightarrow[\text{No}]{\text{No}}$ New, W:Add, Z:Discontinued, F:Interchangeable by set, K:Q'ty Change

Copyright (C) 2015 YANMAR CO., LTD. All RightsReserved.

Fig.25. CONTROLLER

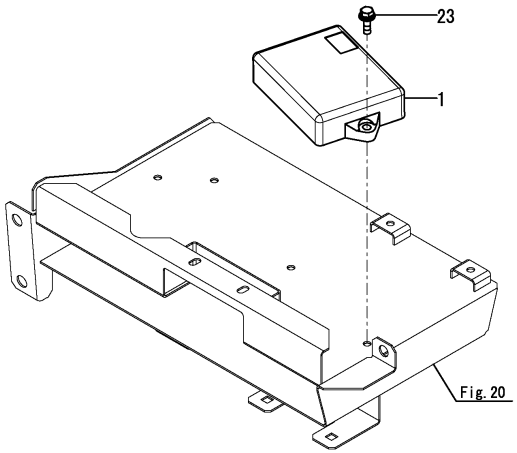

(A)=SV100-2A C(US) (D)=
(B)= (E)=
(C)= (F)=

No.	Lev.	Parts No.	Description	Q'ty (A)	(B)	(C)	(D)	(E)	(F)	I	R
1	1	1A8280-50900	CONTROLLER	1							1
23	1	26014-060202	BOLT, M6X 20	2							

Remarks
(1)Spare parts.
Please contact any authorized distributor nearest to install a proper information.

N:Old $\xleftrightarrow[\text{No}]{\text{Yes}}$ New, Q:Old $\xleftrightarrow[\text{Yes}]{\text{No}}$ New, R:Old $\xleftrightarrow[\text{Yes}]{\text{Yes}}$ New, S:Old $\xleftrightarrow[\text{No}]{\text{No}}$ New, W:Add, Z:Discontinued, F:Interchangeable by set, K:Q'ty Change

Copyright (C) 2015 YANMAR CO., LTD. All RightsReserved.

Fig.26. WORK LAMP

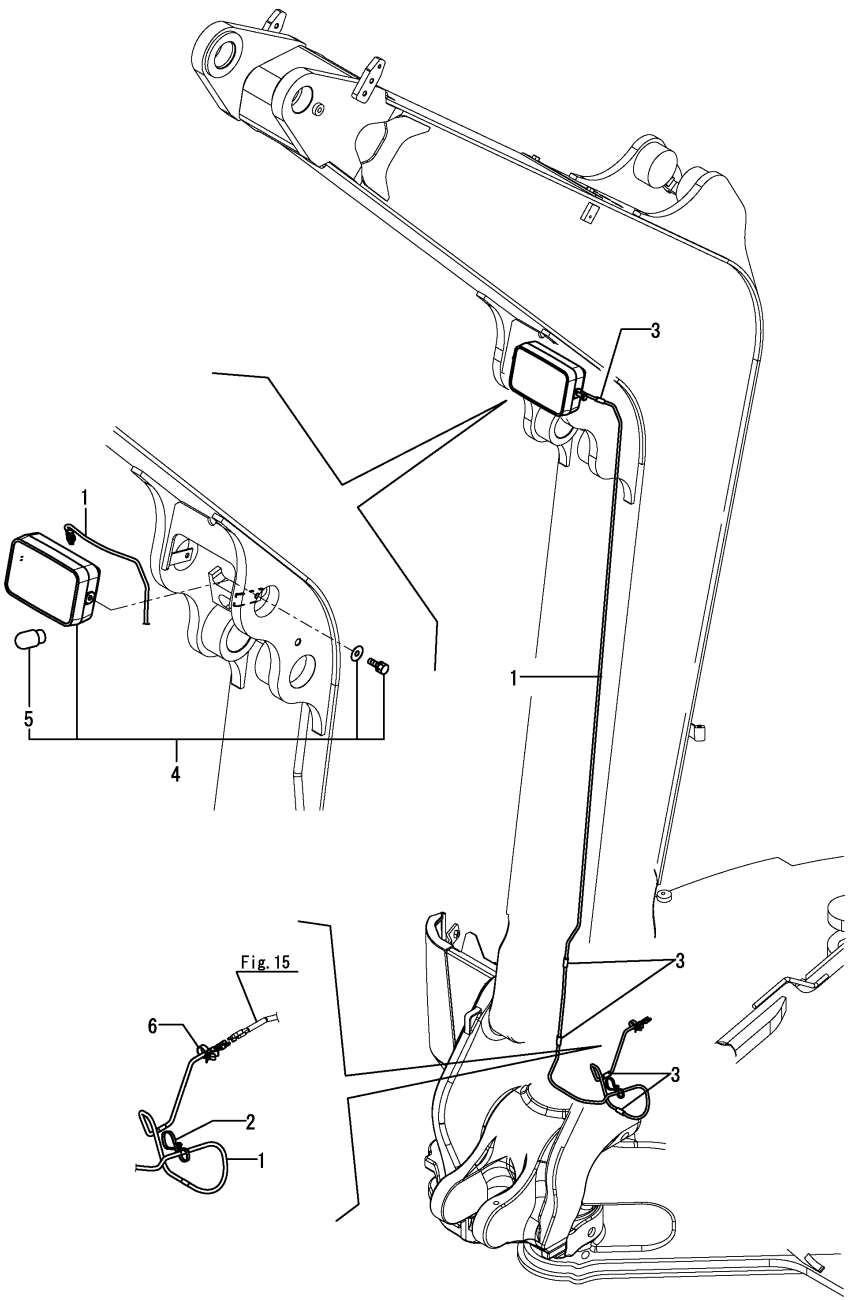

(A)=SV100-2A C(US)
(B)=
(C)=
(D)=
(E)=
(F)=

No.	Lev.	Parts No.	Description	Q'ty (A)	(B)	(C)	(D)	(E)	(F)	I	R
1	1	172A89-16440	HARNESS, WIRE	1							
2	1	172137-16560	BAND	1							
3	1	172B11-16780	RUBBER, CLAMP A	5							
4	1	172162-17400	LAMP ASSY, WORK	1							
5	2	172141-17211	BULB	1							
6	1	1E8775-84120	CLAMP, BAND	1							

N:Old $\xleftrightarrow[\text{No}]{\text{Yes}}$ New, Q:Old $\xleftrightarrow[\text{Yes}]{\text{No}}$ New, R:Old $\xleftrightarrow[\text{Yes}]{\text{Yes}}$ New, S:Old $\xleftrightarrow[\text{No}]{\text{No}}$ New, W:Add, Z:Discontinued, F:Interchangeable by set, K:Q'ty Change

Copyright (C) 2015 YANMAR CO., LTD. All RightsReserved.

Fig.27. INDICATOR BOX

(A)=SV100-2A C(US) (D)=
(B)= (E)=
(C)= (F)=

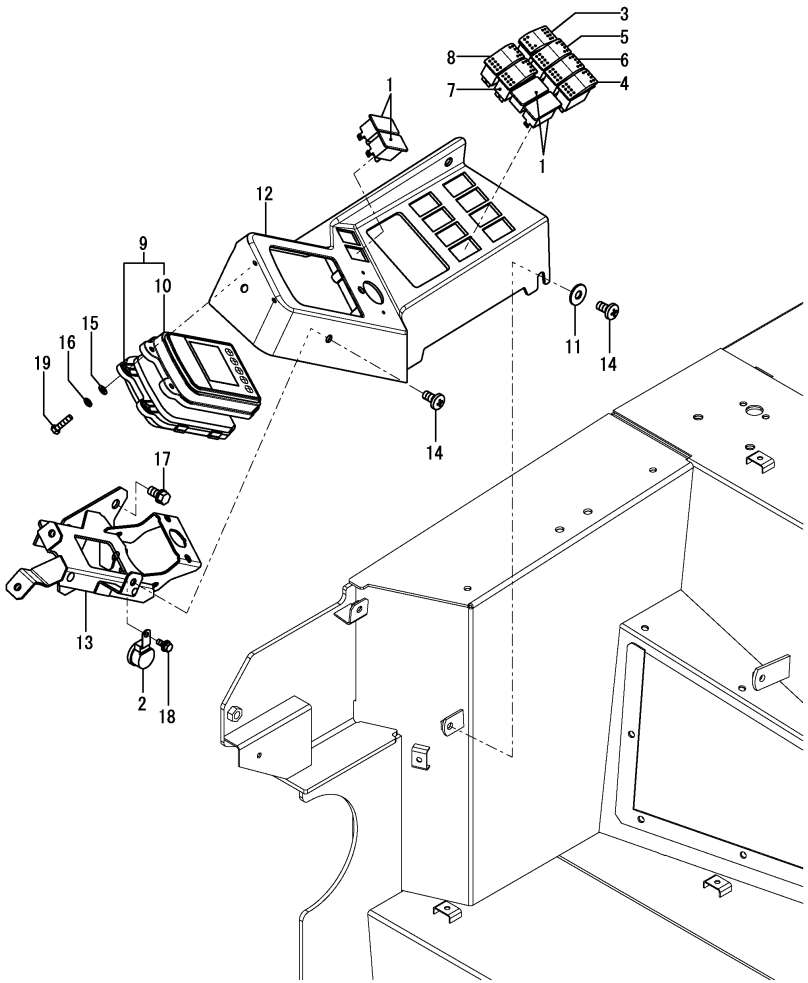

No.	Lev.	Parts No.	Description	Q'ty (A)	(B)	(C)	(D)	(E)	(F)	I	R
1	1	172538-17100	PLUG, PANEL	4							
2	1	172141-17150	BUZZER	1							
3	1	172B11-17200	SWITCH, DPF	1							
4	1	172A69-17211	SWITCH, TRAVLE	1							
5	1	172A69-17221	SWITCH, WIPER	1							
6	1	172A69-17231	SWITCH, LIGHT	1							
7	1	172A69-17241	SWITCH, AUTO DECEL	1							
8	1	172A69-17251	SWITCH, ECO	1							
9	1	172B03-17256	MONITOR ASSY	1							
10	2	172B03-17261	MONITOR ASSY,UPPER	1							
11	1	172458-62430	WASHER	2							
12	1	172B11-63140	PANEL, INSTRUMENT	1							1
12-1	1	172B11-63240	PANEL, INSTRUMENT D	1						S	2
	(A=MAF001)										
13	1	172B11-63500	STAY ASSY, INPANE	1							
14	1	172137-69850	SCREW	4							
15	1	22137-050000	WASHER, 5	4							
16	1	22217-050000	WASHER, SPRING 5	4							
17	1	26013-100202	BOLT, SPRING M10X 20	3							
18	1	26014-060162	BOLT, M6X 16	1							
19	1	26116-050202	BOLT, M5X 20 PLATED	4							

Remarks
* DPF: DPF stands for DIESEL PARTICULATE FILTER.
(1)Color = DARK OLIVE GRAY.
(2)Color = PANTONE 425C.

N:Old $\xleftrightarrow[\text{No}]{\text{Yes}}$ New, Q:Old $\xleftrightarrow[\text{Yes}]{\text{No}}$ New, R:Old $\xleftrightarrow[\text{Yes}]{\text{Yes}}$ New, S:Old $\xleftrightarrow[\text{No}]{\text{No}}$ New, W:Add, Z:Discontinued, F:Interchangeable by set, K:Q'ty Change

Copyright (C) 2015 YANMAR CO., LTD. All RightsReserved.

Fig.28. GPS

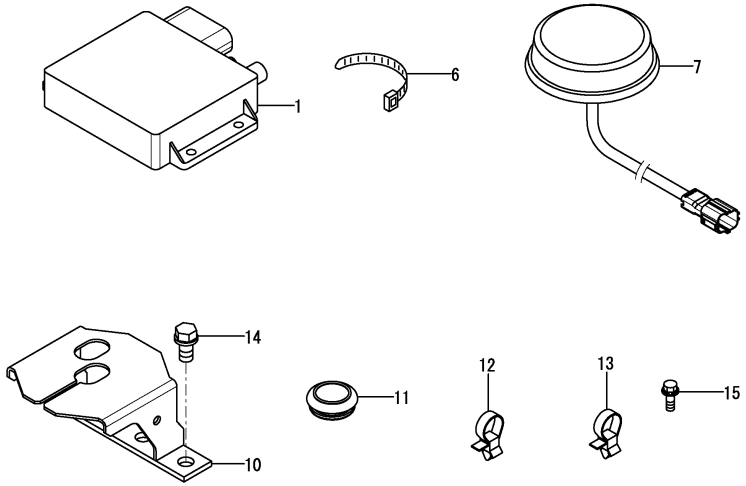

(A)=SV100-2A C(US)
(B)=
(C)=
(D)=
(E)=
(F)=

No.	Lev.	Parts No.	Description	Q'ty (A)	(B)	(C)	(D)	(E)	(F)	I	R
1	1	1RF001-00024	CONTROLLER,MOBILE,O	1							1
6	1	172126-11510	BAND	6							
7	1	172B11-16590	ANTENNA ASSY,MOBILE	1							
10	1	172B11-17920	BRACKET ASSY, GPS	1							
11	1	172B11-18880	GROMMET,30	1							
12	1	1E8775-84120	CLAMP, BAND	4							
13	1	1E8490-84130	CLAMP, BAND	3							
14	1	26013-100202	BOLT, SPRING M10X 20	2							
15	1	26014-060162	BOLT, M6X 16	4							

Remarks
(1)Before installing, always set the unique information at an authorized dealer.
Carrier registration is required when replacing this part.
For more information, contact the service department of the dealer you purchased from.
Registration is required when replacing this part.
For more information, contact the service department of the dealer you purchased from.

N:Old $\xleftarrow[\text{No}]{\text{Yes}}$ New, Q:Old $\xleftarrow[\text{Yes}]{\text{No}}$ New, R:Old $\xleftarrow[\text{Yes}]{\text{Yes}}$ New, S:Old $\xleftarrow[\text{No}]{\text{No}}$ New, W:Add, Z:Discontinued, F:Interchangeable by set, K:Q'ty Change

Copyright (C) 2015 YANMAR CO., LTD. All RightsReserved.

Fig.29. AIR CONDITIONER(CABIN RELATED)

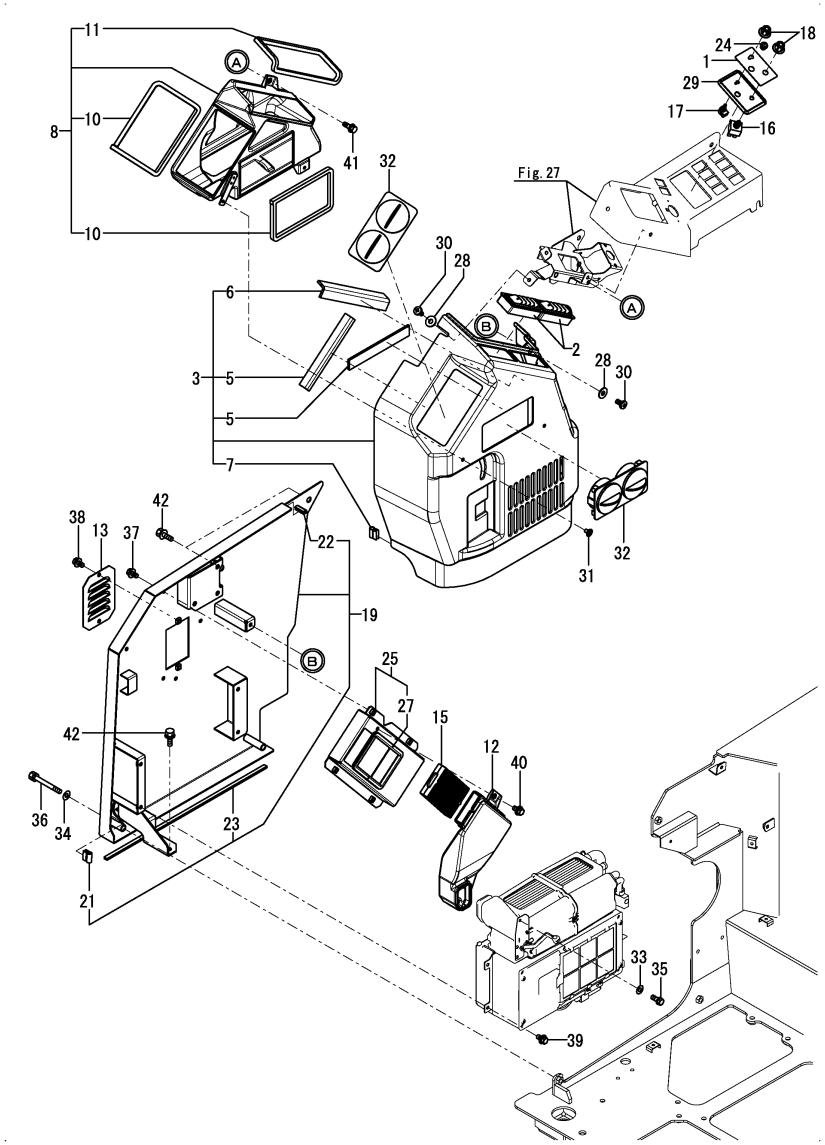

(A)=SV100-2A C(US)
(B)=
(C)=
(D)=
(E)=
(F)=

No.	Lev.	Parts No.	Description	Q'ty (A)	(B)	(C)	(D)	(E)	(F)	I	R
1	1	172B03-03250	LABEL,SW A/C	1							
2	1	172458-17700	GRILLE	2							
3	1	172B11-18200	COVER ASSY,A/C	1							1
3-1	1	172B11-18210	COVER ASSY,A/C D	1						S	4
	(A=MAF001)										
5	2	172B11-18240	SEAT,INSULATOR A	2							
6	2	172B11-18250	SEAT,INSULATOR B	1							
7	2	172B11-19760	SEAL, 25	1							
8	1	172B11-18700	DUCT ASSY,A/C	1							
10	2	172A69-18750	SEAL, DUCT	2							
11	2	172B11-18810	SEAL,700	1							
12	1	172B11-18740	DUCT,A/C FRESH AIR	1							
13	1	172B11-18780	LOUVER	1							
15	1	172B06-18420	FILTER, AIR	1							
16	1	172B06-18560	SWITCH, BLOWER	1							
17	1	172B06-18570	SWITCH, THERMO	1							
18	1	172B06-18580	KNOB	2							
19	1	172B11-19110	BRACKET ASSY,AC U	1							
21	2	172B11-19760	SEAL, 25	1							
22	2	172455-61580	TRIM	1							
23	2	172458-64140	SEAL	1							
24	1	172B03-19160	SWITCH ASSY	1							
25	1	172B11-19250	DUCT ASSY	1							
27	2	172162-62540	SEAL, STEP	1							
28	1	172458-62430	WASHER	2							
29	1	172B03-63340	PANEL, AC	1							2
29-1	1	172B03-63670	PANEL, AC D	1						S	5
	(A=MAF001)										
30	1	172137-69850	SCREW	2							
31	1	1A8110-84210	RIVET	2							3
31-1	1	1A8060-84280	RIVET, PUSH	2						S	6
	(A=MAF001)										
32	1	1A7030-87411	GRILLE ASSY, FRONT	2							
33	1	22117-060000	WASHER, 6	1							
34	1	22137-100000	WASHER, 10	2							
35	1	26013-060102	BOLT, SPRING M6X 10	1							
36	1	26013-100852	BOLT, SPRING M10X 85	2							
37	1	26014-080162	BOLT, M8X 16	4							
38	1	26014-080162	BOLT, M8X 16	2							
39	1	26014-080162	BOLT, M8X 16	4							
40	1	26014-080162	BOLT, M8X 16	1							
41	1	26014-080202	BOLT, M8X 20	1							
42	1	26014-100252	BOLT, M10X 25	3							

Remarks
(1)Color = WARM IVORY.
(2)Color = WARM GARY.
(3)Color = LIGHT GARY.
(4)Color = NAVY GRAY.
(5)Color = PANTONE 425C.
(6)Color = BLACK.

N:Old ←Yes/No→ New, Q:Old ←No/Yes→ New, R:Old ←Yes/Yes→ New, S:Old ←No/No→ New, W:Add, Z:Discontinued, F:Interchangeable by set, K:Q'ty Change

Copyright (C) 2015 YANMAR CO., LTD. All RightsReserved.

Fig.30. AIR CONDITIONER(PIPING)

(A)=SV100-2A C(US) (D)=
(B)= (E)=
(C)= (F)=

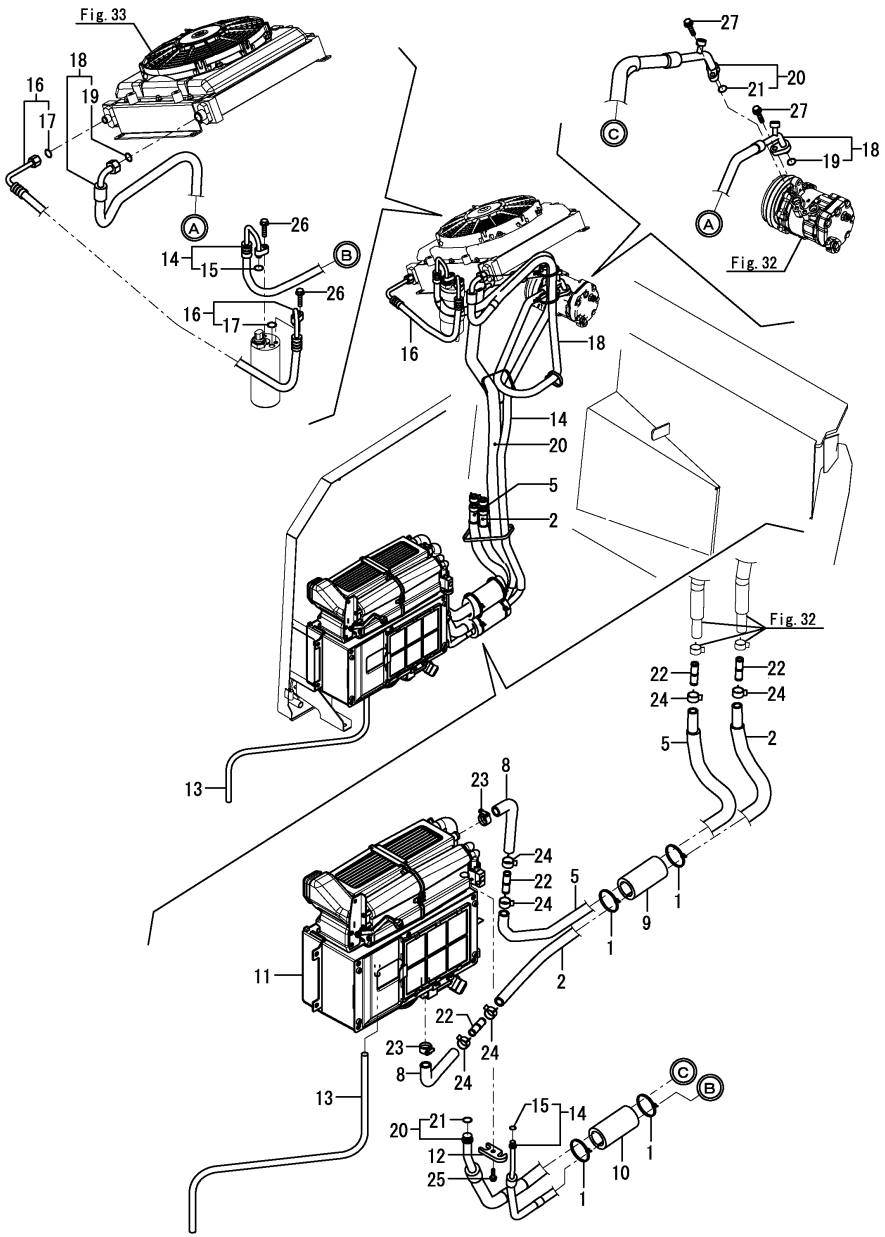

No.	Lev.	Parts No.	Description	Q'ty (A)	(B)	(C)	(D)	(E)	(F)	I	R
1	1	172126-11510	BAND	4							
2	1	172B12-17850	HOSE ASSY,HEATER 550	1							
5	1	172B12-17860	HOSE ASSY,HEATER 600	1							
8	1	172B11-17870	HOSE, HEATER A	2							
9	1	172A69-18900	SPONGE, HOSE	1							
10	1	172B11-18900	SPONGE,42X120	1							
11	1	172B03-19101	AIR CON UNIT	1							1
12	1	172B03-19110	PLATE, FLANGE	1							
13	1	172B11-19870	HOSE, DRAIN AC	1							
14	1	172B12-19800	HOSE,EXP.V	1							
15	2	172B06-18700	O-RING	2							
16	1	172B11-19830	HOSE,RECIEVER	1							
17	2	172B06-18700	O-RING	2							
18	1	172B12-19840	HOSE,DISCHARGE	1							
19	2	172B06-18680	O-RING	2							
20	1	172B12-19850	HOSE,SUCTION	1							
21	2	172B06-18690	O-RING	2							
22	1	1A7030-88660	PIPE, JOINT	4							
23	1	23001-022000	CLAMP, HOSE 22	2							
24	1	23080-018000	CLAMP, 18	6							
25	1	26106-060202	BOLT, M6X 20 PLATED	1							
26	1	26106-060252	BOLT, M6X 25 PLATED	2							
27	1	26106-080252	BOLT, M8X 25 PLATED	2							

Remarks
(1)Inner parts are shown in Fig.31.

N:Old $\frac{\text{Yes}}{\text{No}}$ New, Q:Old $\frac{\text{No}}{\text{Yes}}$ New, R:Old $\frac{\text{Yes}}{\text{Yes}}$ New, S:Old $\frac{\text{No}}{\text{No}}$ New, W:Add, Z:Discontinued, F:Interchangeable by set, K:Q'ty Change

Copyright (C) 2015 YANMAR CO., LTD. All RightsReserved.

Fig.31. AIR CONDITIONER(UNIT)(INNER PARTS)

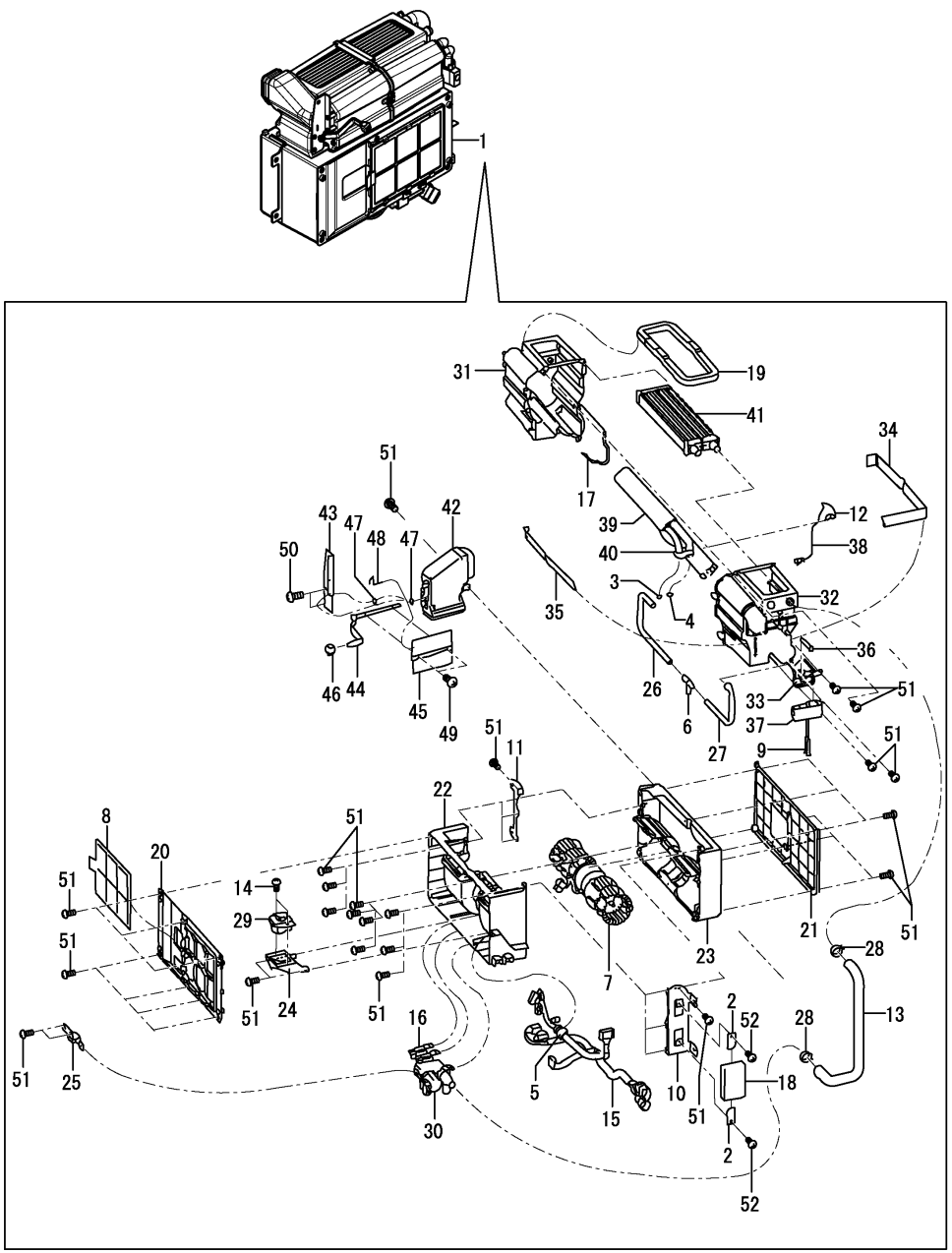

(A)=SV100-2A C(US) (D)=
(B)= (E)=
(C)= (F)=

No.	Lev.	Parts No.	Description	Q'ty (A)	(B)	(C)	(D)	(E)	(F)	I	R
1	1	172B03-19101	AIR CON UNIT	1							
2	2	172B06-18550	BRACKET,AMP	2							
3	2	172B06-18680	O-RING	1							
4	2	172B06-18690	O-RING	1							
5	2	172B06-18930	INSULATOR,HARNESS	1							
6	2	172B06-18960	ELBOW,DRAIN	1							
7	2	172B06-18970	MOTOR ASSY,BLOWER	1							
8	2	172B03-19120	FILTER, REC	1							
9	2	172B06-19120	BOLT, SOCKET M5X40	2							
10	2	172B03-19130	BRACKET, 1	1							
11	2	172B03-19140	BRACKET, 2	1							
12	2	172B06-19140	HOLDER,THERMISTOR	1							
13	2	172B03-19150	HOSE, HEATER	1							
14	2	172B06-19150	SCREW, PAN HEAD	2							
15	2	172B03-19191	HARNESS ASSY, HVAC	1							
16	2	172B03-19200	RELAY	2							
17	2	172B06-19200	SEAL,CASE	1							
18	2	172B03-19210	CONTROLLER, HVAC	1							
19	2	172B03-19220	SEAL, OUTLET	1							
20	2	172B03-19230	COVER, FRONT	1							
21	2	172B03-19240	COVER, BACK	1							
22	2	172B03-19250	CASE ASSY, LOW FRONT	1							
23	2	172B03-19260	CASE ASSY, LOW BACK	1							
24	2	172B03-19270	MOUNT, RESISTOR	1							
25	2	172B03-19280	RETAINER, VALVE	1							
26	2	172B03-19290	HOSE, DRAIN 1	1							
27	2	172B03-19300	HOSE, DRAIN 2	1							
28	2	172B03-19310	CLAMP, HOSE	2							
29	2	172B03-19320	RESISTOR	1							
30	2	172B03-19330	VALVE ASSY, WATER	1							
31	2	172B03-19340	CASE ASSY, UP FEMALE	1							
32	2	172B03-19350	CASE ASSY, UP MALE	1							
33	2	172B03-19360	COVER ASSY, PAF	1							
34	2	172B03-19370	SEAL, AC-UNIT 1	1							
35	2	172B03-19380	SEAL, AC-UNIT 2	1							
36	2	172B03-19390	RETAINER, TXV	1							
37	2	172B03-19400	VALVE, EXPANSION	1							
38	2	172B03-19410	SENSOR, TEMPERATURE	1							
39	2	172B03-19420	EVAPORATOR ASSY	1							
40	2	172B03-19430	STAY	1							
41	2	172B03-19440	HEATER ASSY	1							
42	2	172B03-19450	DUCT ASSY	1							
43	2	172B03-19460	BRACKET, DUCT	1							
44	2	172B03-19470	LEVER ASSY, DOOR	1							
45	2	172B03-19480	DOOR ASSY	1							
46	2	172B03-19490	KNOB	1							
47	2	172B03-19500	SPACER, C	2							
48	2	172B03-19510	SPRING	1							
49	2	172B03-19520	SCREW, 3X6	2							
50	2	172B03-19530	SCREW, 4X10	2							
51	2	172B03-19540	SCREW, 4X16	36							

N:Old $\overset{\text{Yes}}{\underset{\text{No}}{\leftrightarrow}}$ New, Q:Old $\overset{\text{No}}{\underset{\text{Yes}}{\leftrightarrow}}$ New, R:Old $\overset{\text{Yes}}{\underset{\text{Yes}}{\leftrightarrow}}$ New, S:Old $\overset{\text{No}}{\underset{\text{No}}{\leftrightarrow}}$ New, W:Add, Z:Discontinued, F:Interchangeable by set, K:Q'ty Change

++ CONTINUE ++

Copyright (C) 2015 YANMAR CO., LTD. All RightsReserved.

Fig.31. AIR CONDITIONER(UNIT)(INNER PARTS)

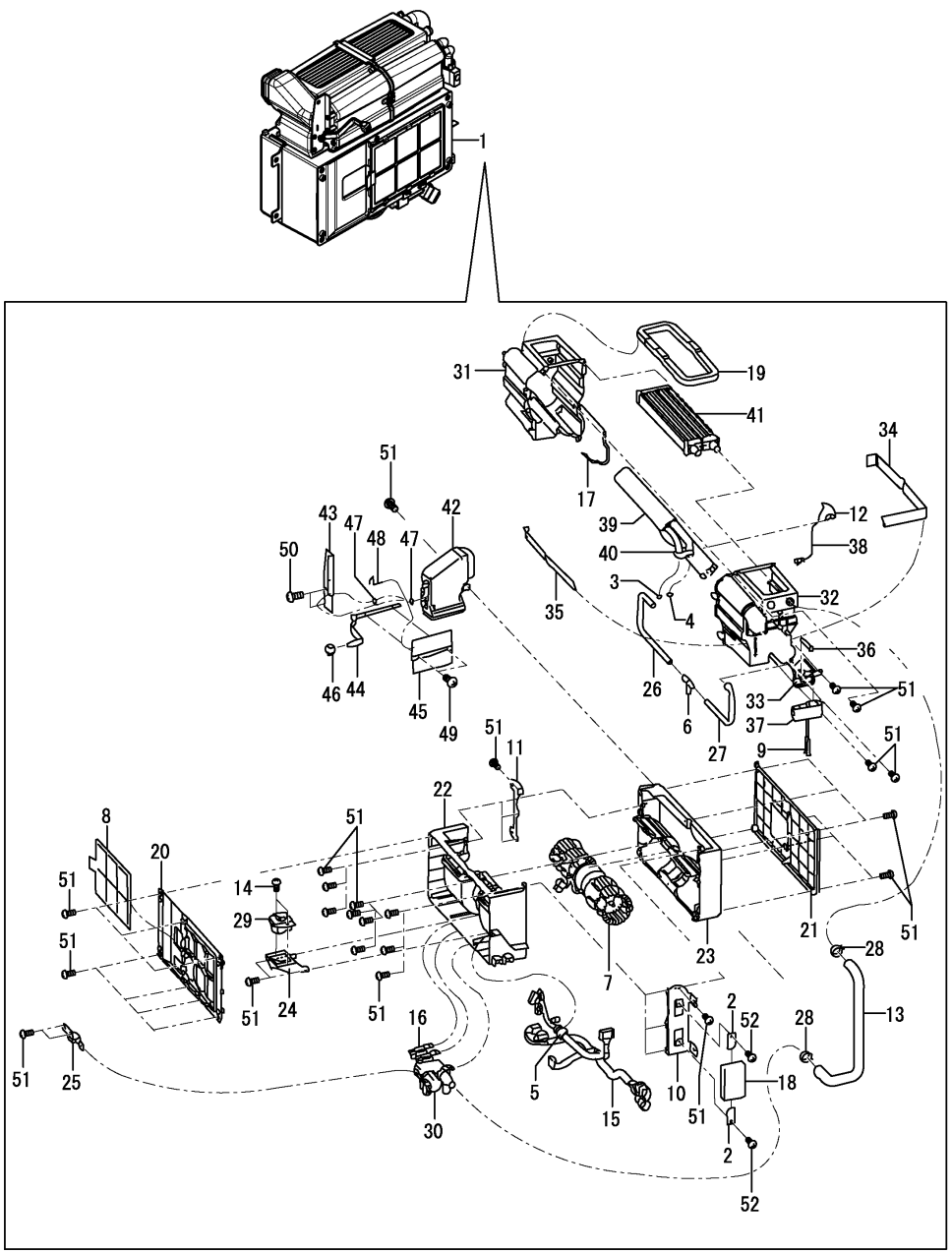

(A)=SV100-2A C(US)
(B)=
(C)=
(D)=
(E)=
(F)=

No.	Lev.	Parts No.	Description	Q'ty (A)	(B)	(C)	(D)	(E)	(F)	I	R
52	2	172B03-19550	SCREW, 5X5	2							

N:Old $\xleftarrow[\text{No}]{\text{Yes}}$ New, Q:Old $\xleftarrow[\text{Yes}]{\text{No}}$ New, R:Old $\xleftarrow[\text{Yes}]{\text{Yes}}$ New, S:Old $\xleftarrow[\text{No}]{\text{No}}$ New, W:Add, Z:Discontinued, F:Interchangeable by set, K:Q'ty Change

Copyright (C) 2015 YANMAR CO., LTD. All RightsReserved.

Fig.32. AIR CONDITIONER(ENGINE RELATED)

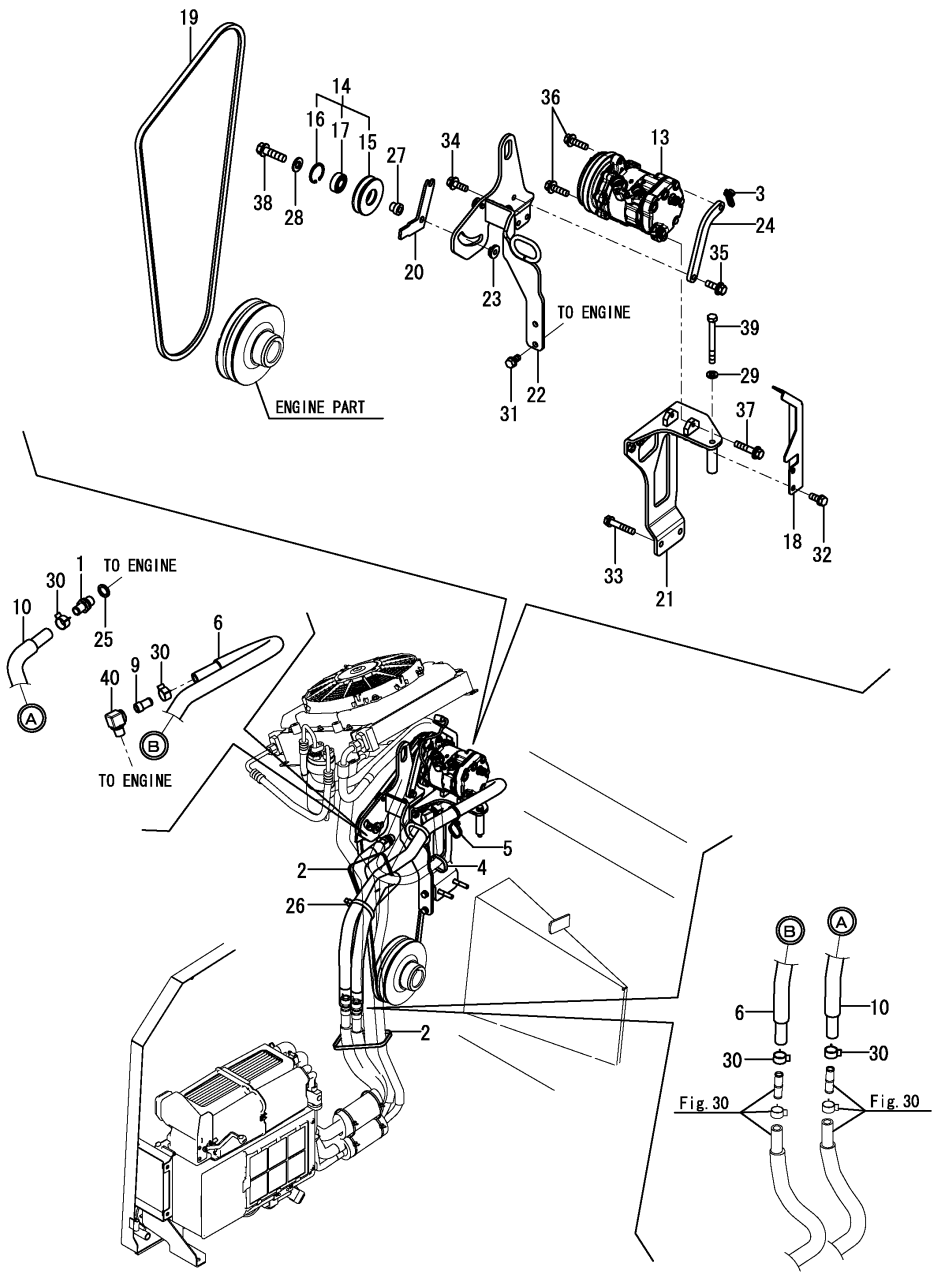

(A)=SV100-2A C(US) (D)=
(B)= (E)=
(C)= (F)=

No.	Lev.	Parts No.	Description	Q'ty (A)	(B)	(C)	(D)	(E)	(F)	I	R
1	1	1A8180-00400	NIPPLE, DRAIN	1							
2	1	172126-11510	BAND	4							
3	1	172137-16560	BAND	1							
4	1	172137-16560	BAND	2							
5	1	172137-16560	BAND	1							
6	1	172A47-17550	HOSE ASSY, HEATER	1							
9	1	172124-17640	JOINT, PIPE	1							
10	1	172A89-17840	HOSE ASY,HEATER 900	1							
13	1	172B11-18100	COMPRESSOR ASSY, 116	1							
14	1	172A69-18150	PULLEY ASSY, TENSION	1							
15	2	172A69-18160	PULLEY, TENSION	1							
16	2	22252-000350	RING, 35	1							
17	2	24104-062020	BEARING, 6202UUC3	1							
18	1	172B12-18150	GUARD,BELT	1							
19	1	172B12-18200	V-BELT, HM64	1							
20	1	172B11-18290	BAR,ADJUST	1							
21	1	172B12-18300	BRACKET ASSY,COMP	1							
22	1	172B12-18370	BRACKET ASSY,PULLY	1							
23	1	172187-18410	NUT, PULLEY	1							
24	1	172B11-18410	PLATE,COMPRESSOR	1							
25	1	124465-44950	GASKET, 16	1							
26	1	194202-56460	BAND, 200	1							
27	1	129466-96240	SPACER, PULLEY	1							
28	1	22137-100000	WASHER, 10	1							
29	1	22217-080000	WASHER, SPRING 8	1							
30	1	23080-018000	CLAMP, 18	4							
31	1	26013-080162	BOLT, SPRING M8X 16	2							
32	1	26013-080202	BOLT, SPRING M8X 20	2							
33	1	26013-080452	BOLT, SPRING M8X 45	2							
34	1	26014-080202	BOLT, M8X 20	2							
35	1	26014-080252	BOLT, M8X 25	1							
36	1	26014-080302	BOLT, M8X 30	2							
37	1	26014-080402	BOLT, M8X 40	1							
38	1	26106-100352	BOLT, M10X 35 PLATED	1							
39	1	26116-080752	BOLT, M8X 75 PLATED	1							
40	1	933166-24240	ELBOW, SWIVEL JOINT	1							

N:Old $\frac{\text{Yes}}{\text{No}}$ New, Q:Old $\frac{\text{No}}{\text{Yes}}$ New, R:Old $\frac{\text{Yes}}{\text{Yes}}$ New, S:Old $\frac{\text{No}}{\text{No}}$ New, W:Add, Z:Discontinued, F:Interchangeable by set, K:Q'ty Change

Copyright (C) 2015 YANMAR CO., LTD. All RightsReserved.

Fig.33. AIR CONDITIONER(CONDENSER RELATED)

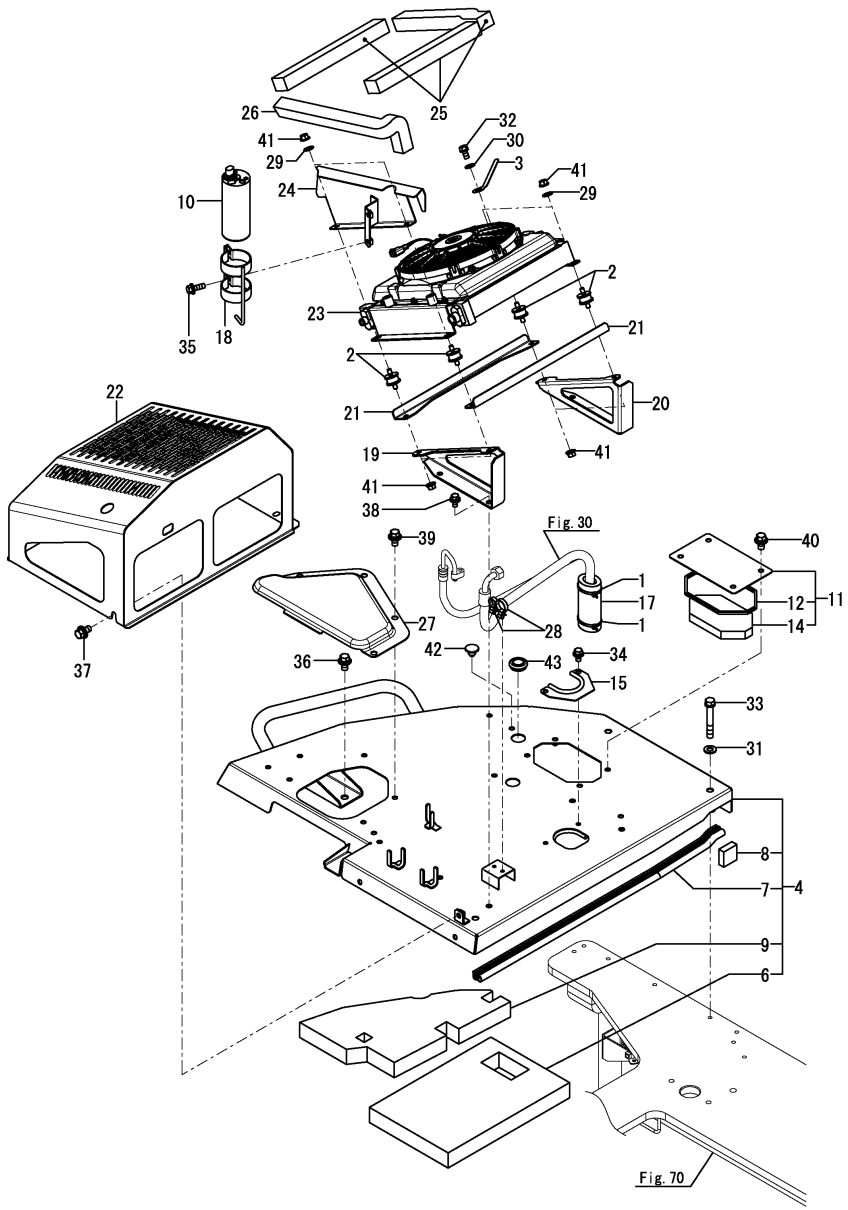

(A)=SV100-2A C(US)
(B)=
(C)=
(D)=
(E)=
(F)=

No.	Lev.	Parts No.	Description	Q'ty (A)	(B)	(C)	(D)	(E)	(F)	I	R
1	1	172126-11510	BAND	2							
2	1	172447-13550	MOUNT, PAD	4							
3	1	172126-16540	CLAMP	1							
4	1	172B12-18440	BASE ASSY,COND	1							
6	2	172B12-18480	SPONGE,COND BASE	1							
7	2	172B12-18490	SEAL, 745	1							
8	2	172B12-18540	SPONGE,40X40X15	1							
9	2	172B12-18550	SPONGE,COND BASE	1							
10	1	172B06-18450	DRIER, RECEIVER	1							
11	1	172B12-18570	COVER ASSY,COND BASE	1							
12	2	172B12-18580	SEAL,510	1							
14	2	172B12-18630	SPONGE, COVER	1							
15	1	172A89-18580	COVER, HOSE	1							
17	1	172B11-18900	SPONGE,42X120	1							
18	1	172B03-18950	BRACKET ASSY, R/D	1							
19	1	172B11-19500	BRACKET, COND F	1							
20	1	172B11-19520	BRACKET, COND R	1							
21	1	172B11-19580	RIB,COND BKT	2							
22	1	172B11-19610	COVER ASSY,COND	1							
23	1	172B03-19680	CONDENSER ASSY	1							1
24	1	172B11-19701	PLATE ASSY,SEAL COND	1							
25	1	172B11-19770	SEAL,310	3							
26	1	172B11-19780	SEAL,420	1							
27	1	172B12-62130	COVER,UPPER	1							2
27A	1	172437-03391	LABEL, RADIATOR	1							3
28	1	1E8490-84130	CLAMP, BAND	2							
29	1	22137-080000	WASHER, 8	4							
30	1	22137-080000	WASHER, 8	1							
31	1	22137-100000	WASHER, 10	3							
32	1	26013-080162	BOLT, SPRING M8X 16	1							
33	1	26013-100702	BOLT, SPRING M10X 70	3							
34	1	26014-080162	BOLT, M8X 16	2							
35	1	26014-080252	BOLT, M8X 25	2							
36	1	26014-100202	BOLT, M10X 20	1							
37	1	26014-100202	BOLT, M10X 20	4							
38	1	26014-100202	BOLT, M10X 20	4							
39	1	26014-100202	BOLT, M10X 20	4							
40	1	26014-100202	BOLT, M10X 20	4							
41	1	26051-080002	NUT, M8	8							
42	1	172122-17190	CLIP, TREE	2							
43	1	172456-53700	GROMMET	1							

Remarks
(1)Inner parts are shown in Fig.34.
(2)Attach the No.27A label to this part.
(3)Label is not illustrated.

N:Old $\frac{\text{Yes}}{\text{No}}$ New, Q:Old $\frac{\text{No}}{\text{Yes}}$ New, R:Old $\frac{\text{Yes}}{\text{Yes}}$ New, S:Old $\frac{\text{No}}{\text{No}}$ New, W:Add, Z:Discontinued, F:Interchangeable by set, K:Q'ty Change

Copyright (C) 2015 YANMAR CO., LTD. All RightsReserved.

Fig.34. AIR CONDITIONER(CONDENSER)(INNER PARTS)

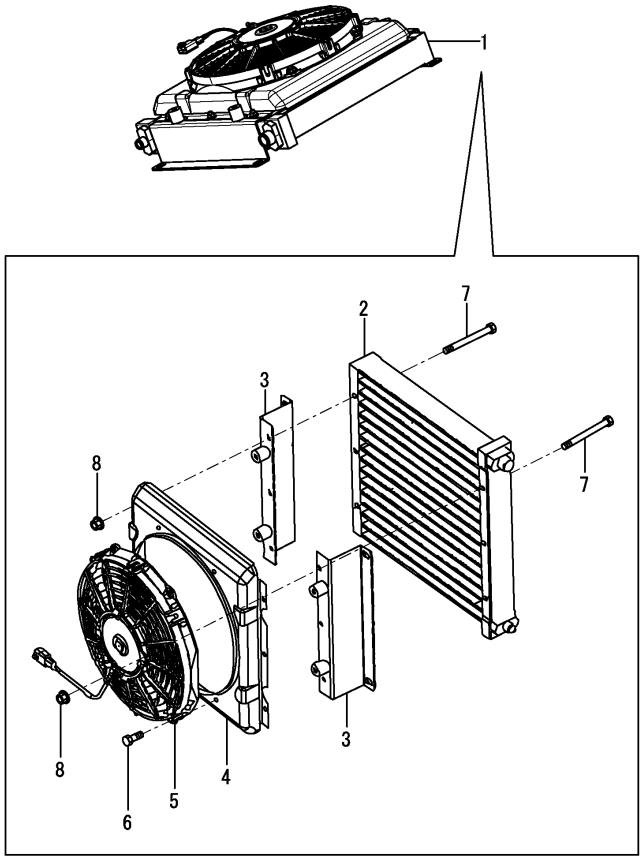

(A)=SV100-2A C(US)
(B)=
(C)=
(D)=
(E)=
(F)=

No.	Lev.	Parts No.	Description	Q'ty (A)	(B)	(C)	(D)	(E)	(F)	I	R
1	1	172B03-19680	CONDENSER ASSY	1							
2	2	172B06-19260	CONDENSER	1							
3	2	172B03-19650	BRACKET ASSY, COND	2							
4	2	172B03-19660	COVER ASSY, COND FAN	1							
5	2	172B03-19670	MOTOR ASSY, FAN	1							
6	2	26106-060162	BOLT, M6X 16 PLATED	4							
7	2	26106-060602	BOLT, M6X 60 PLATED	6							
8	2	26366-060002	NUT, M6	6							

N:Old $\xleftarrow[\text{No}]{\text{Yes}}$ New, Q:Old $\xleftarrow[\text{Yes}]{\text{No}}$ New, R:Old $\xleftarrow[\text{Yes}]{\text{Yes}}$ New, S:Old $\xleftarrow[\text{No}]{\text{No}}$ New, W:Add, Z:Discontinued, F:Interchangeable by set, K:Q'ty Change

Copyright (C) 2015 YANMAR CO., LTD. All RightsReserved.

Fig.35. SPROCKET

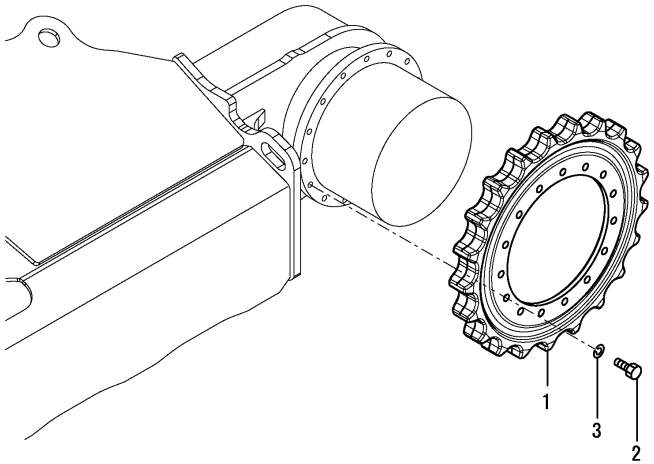

(A)=SV100-2A C(US)
(B)=
(C)=
(D)=
(E)=
(F)=

No.	Lev.	Parts No.	Description	Q'ty (A)	(B)	(C)	(D)	(E)	(F)	I	R
1	1	172499-29100-1	SPROCKET, 21	2							
2	1	172460-73320	BOLT	30							
3	1	22217-160000	WASHER, SPRING 16	30							

N:Old $\xleftrightarrow[\text{No}]{\text{Yes}}$ New, Q:Old $\xleftrightarrow[\text{Yes}]{\text{No}}$ New, R:Old $\xleftrightarrow[\text{Yes}]{\text{Yes}}$ New, S:Old $\xleftrightarrow[\text{No}]{\text{No}}$ New, W:Add, Z:Discontinued, F:Interchangeable by set, K:Q'ty Change

Copyright (C) 2015 YANMAR CO., LTD. All RightsReserved.

Fig.36. IDLER & ADJUST

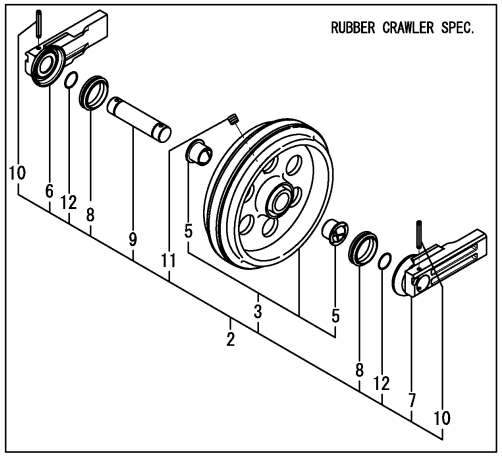

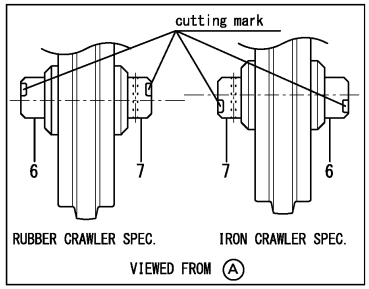

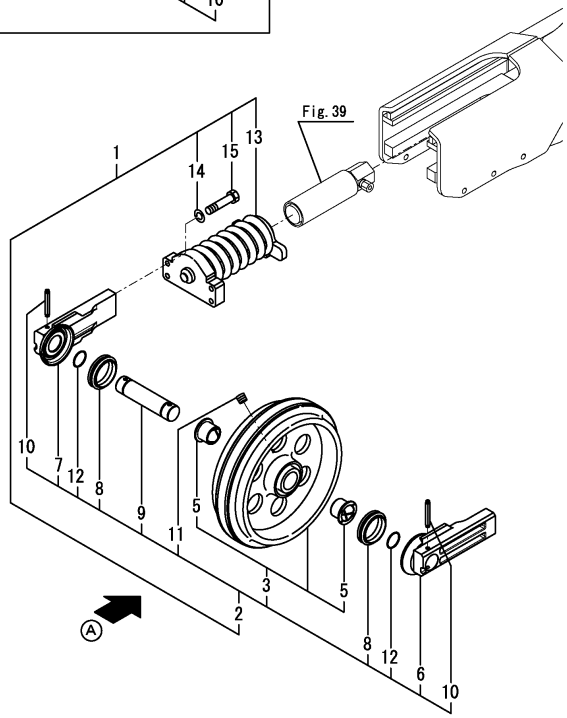

(A)=SV100-2A C(US)
(B)=
(C)=
(D)=
(E)=
(F)=

No.	Lev.	Parts No.	Description	Q'ty (A)	(B)	(C)	(D)	(E)	(F)	I	R
1	1	772499-37100	IDLER ASSY	2							
2	2	172499-37101-1	IDLER ASSY	2							1
3	3	172499-37111	IDLER, 450	2							
5	4	172499-37131	BUSH	4							
6	3	172499-37142	COVER, IDLER SEAL	2							
7	3	172499-37152	COVER, IDLER SEAL	2							
8	3	172499-37161	SEAL, FLOATING	4							
9	3	172499-37172	SHAFT, IDLER	2							
10	3	172499-37180	PIN, SPRING	4							
11	3	23876-020000	PLUG, R02	2							
12	3	24311-000490	O-RING, 1AP49.0	4							
13	2	172499-37700-1	ADJUSTER ASSY	2							
14	2	22217-160000	WASHER, SPRING 16	8							
15	2	26116-160702	BOLT M16X 70 PLATED	8							

Remarks
(1)This part is used both rubber crawler & iron crawler.
When constructing Idler Assy, The direction of cutting mark of idler seal cover A & B is the opposite side concerning rubber crawler & iron crawler.

N:Old $\frac{\text{Yes}}{\text{No}}$ New, Q:Old $\frac{\text{No}}{\text{Yes}}$ New, R:Old $\frac{\text{Yes}}{\text{Yes}}$ New, S:Old $\frac{\text{No}}{\text{No}}$ New, W:Add, Z:Discontinued, F:Interchangeable by set, K:Q'ty Change

Copyright (C) 2015 YANMAR CO., LTD. All RightsReserved.

Fig.37. TRACK ROLLER

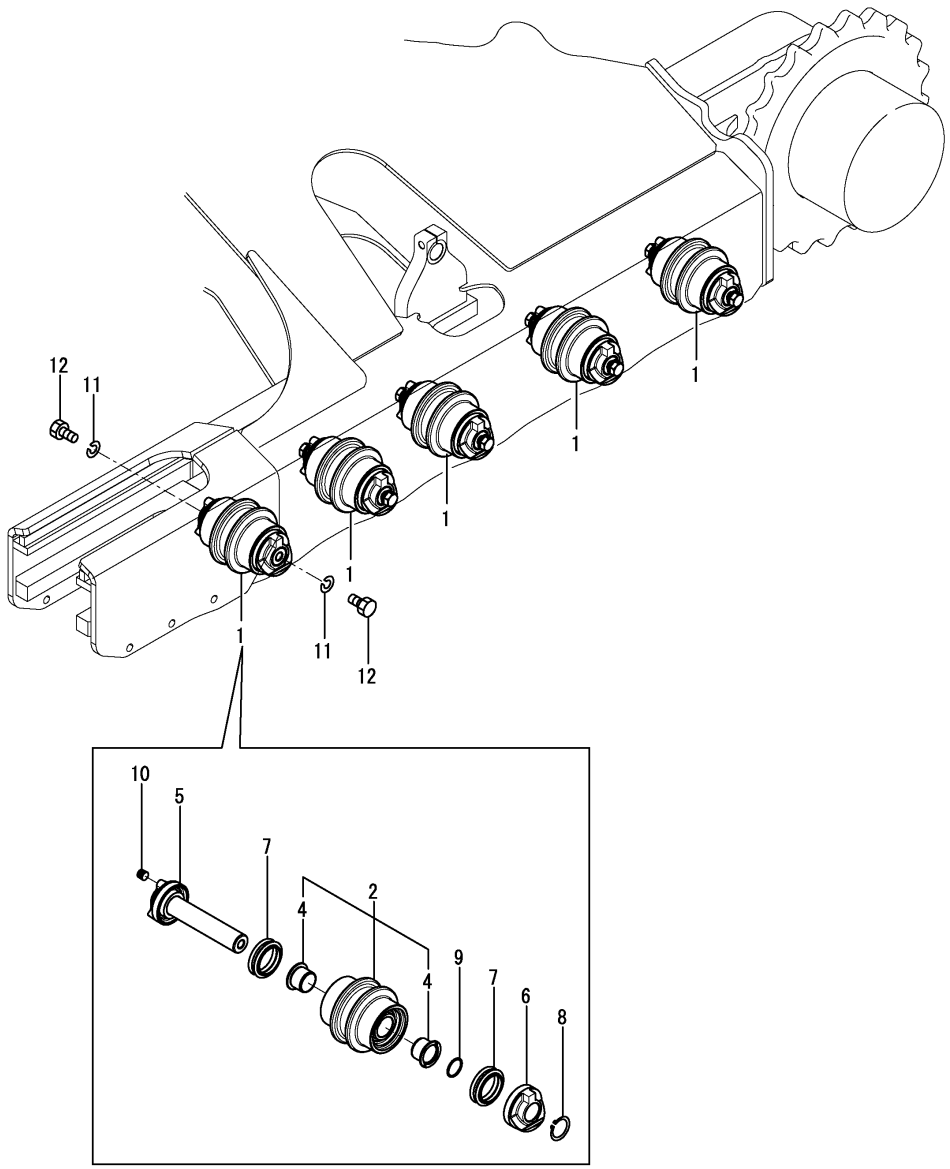

(A)=SV100-2A C(US)
(B)=
(C)=
(D)=
(E)=
(F)=

No.	Lev.	Parts No.	Description	Q'ty (A)	(B)	(C)	(D)	(E)	(F)	I	R
1	1	172B12-37300	ROLLER ASSY, LOWER	10							
2	2	172B12-37310	ROLLER ASSY, LOWER	10							
4	3	172B12-37330	BUSH	20							
5	2	172B12-37340	SHAFT ASSY	10							
6	2	172B12-37370	COVER, SEAL R	10							
7	2	172B12-37380	SEAL, FLOATING	20							
8	2	22242-000450	RING, 45	10							
9	2	24321-000400	O-RING, 1AG40.0	10							
10	2	933171-13691	PLUG	10							
11	1	22217-200000	WASHER, SPRING 20	20							
12	1	26076-200409	BOLT, 10.920X 40	20							

N:Old $\overset{\text{Yes}}{\underset{\text{No}}{\leftrightarrows}}$ New, Q:Old $\overset{\text{No}}{\underset{\text{Yes}}{\leftrightarrows}}$ New, R:Old $\overset{\text{Yes}}{\underset{\text{Yes}}{\leftrightarrows}}$ New, S:Old $\overset{\text{No}}{\underset{\text{No}}{\leftrightarrows}}$ New, W:Add, Z:Discontinued, F:Interchangeable by set, K:Q'ty Change

Copyright (C) 2015 YANMAR CO., LTD. All RightsReserved.

Fig.38. CARRIER ROLLER

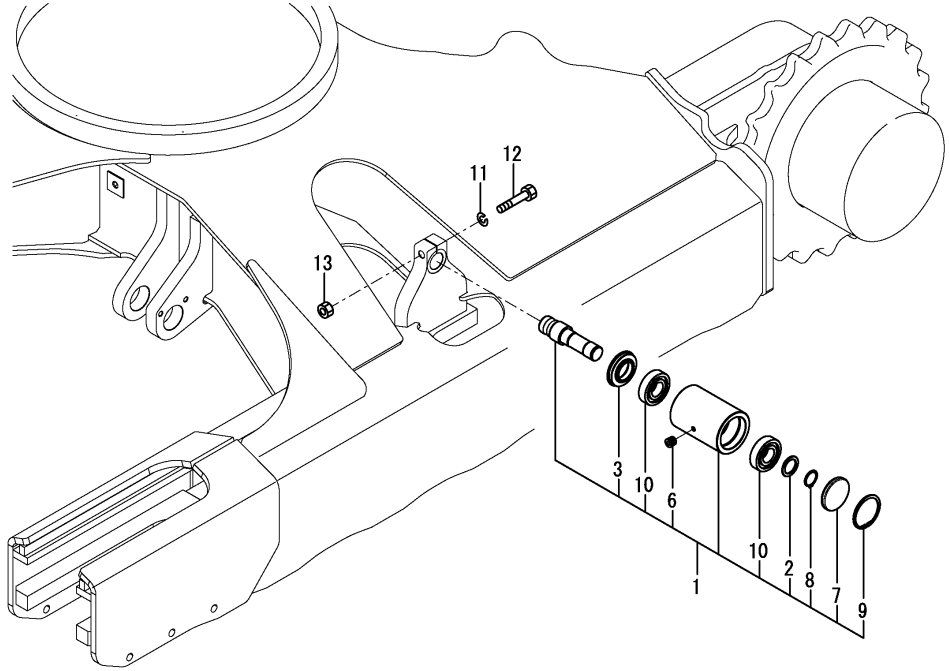

(A)=SV100-2A C(US)
(B)=
(C)=
(D)=
(E)=
(F)=

No.	Lev.	Parts No.	Description	Q'ty (A)	(B)	(C)	(D)	(E)	(F)	I	R
1	1	172499-37500-1	ROLLER ASSY, CARRIER	2							
2	2	172730-31630	COLLAR	2							
3	2	172164-37120	SEAL, OIL	2							
6	2	194630-42120	PLUG, PT1/8	2							
7	2	1T3681-86450	PLUG	2							
8	2	22242-000350	RING, 35	2							
9	2	22252-000800	RING, 80	2							
10	2	24101-063074	BEARING, BALL 6307	4							
11	1	22217-160000	WASHER, SPRING 16	2							
12	1	26116-160852	BOLT, M16X 85 PLATED	2							
13	1	26716-160002	NUT, M16	2							

N:Old $\overset{\text{Yes}}{\underset{\text{No}}{\leftrightarrow}}$ New, Q:Old $\overset{\text{No}}{\underset{\text{Yes}}{\leftrightarrow}}$ New, R:Old $\overset{\text{Yes}}{\underset{\text{Yes}}{\leftrightarrow}}$ New, S:Old $\overset{\text{No}}{\underset{\text{No}}{\leftrightarrow}}$ New, W:Add, Z:Discontinued, F:Interchangeable by set, K:Q'ty Change

Copyright (C) 2015 YANMAR CO., LTD. All RightsReserved.

Fig.39. CRAWLER ADJUST(Y SPEC.)(TO M21258)

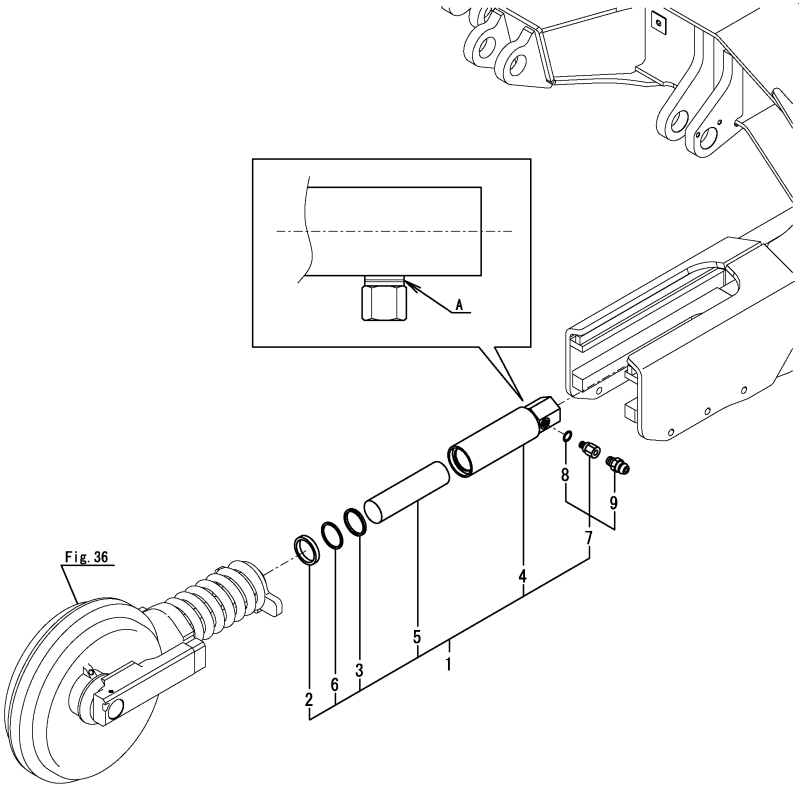

(A)=SV100-2A C(US) (D)=
(B)= (E)=
(C)= (F)=

No.	Lev.	Parts No.	Description	Q'ty (A)	(B)	(C)	(D)	(E)	(F)	I	R
1	1 (A=M21259)	172499-37750-1	CYLINDER ASSY	2						Z	1
2	2	172020-10390	SEAL, DUST	2							
3	2	172020-10401	SEAL	2							
4	2	172499-37760	TUBE ASSY, ADJUST	2							
5	2	172499-37790	PISTON	2							
6	2	172499-37800	RING, BUCK UP	2							
7	2	172122-37844	VALVE ASSY, NIPPLE	2							
8	3	24315-000140	O-RING, 1BP14.0	2							
9	3	24761-020000	NIPPLE, GREASE PT1/8	2							

Remarks
* A : Y specifications have a slit for the identification.
S specifications do not have a slit for the identification.
S specifications are shown in Fig.181(39A).
(1)Interchangeable by Fig.181(39A) No.1.
The inner parts are not compatible.

N:Old $\xleftarrow[\text{No}]{\text{Yes}}$ New, Q:Old $\xleftarrow[\text{Yes}]{\text{No}}$ New, R:Old $\xleftarrow[\text{Yes}]{\text{Yes}}$ New, S:Old $\xleftarrow[\text{No}]{\text{No}}$ New, W:Add, Z:Discontinued, F:Interchangeable by set, K:Q'ty Change

Copyright (C) 2015 YANMAR CO., LTD. All RightsReserved.

Fig.181. (39A)CRAWLER ADJUST(S SPEC.)(FROM M21259)

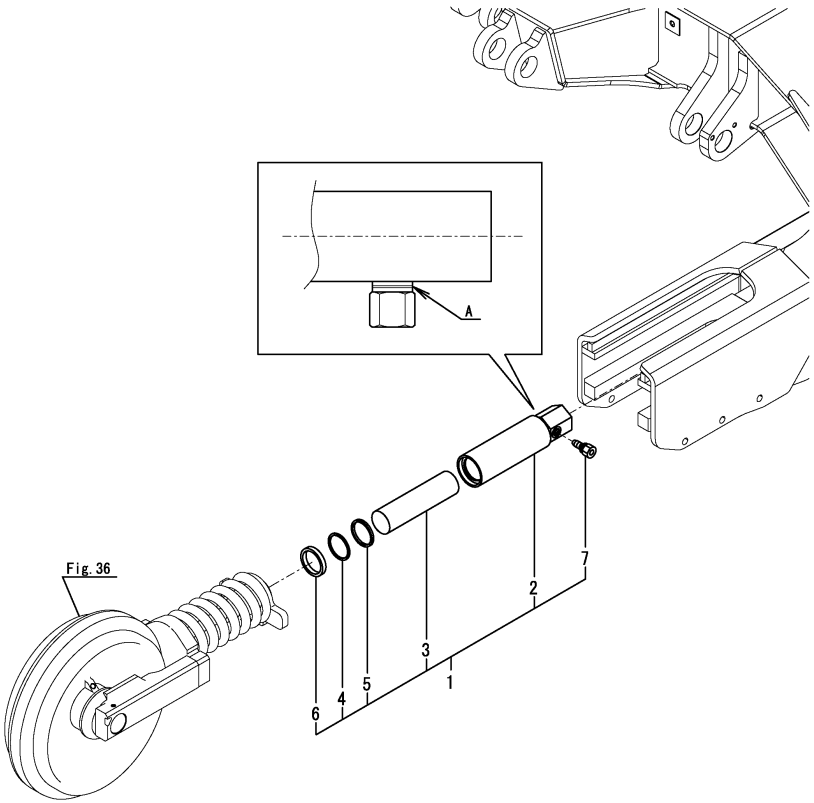

(A)=SV100-2A C(US) (D)=
(B)= (E)=
(C)= (F)=

No.	Lev.	Parts No.	Description	Q'ty (A)	(B)	(C)	(D)	(E)	(F)	I	R
1	1 (A=M21259)	172B12-37750	CYLINDER ASSY, ADJUS	2						W	
2	2	172B12-37760	TUBE ASSY,ADJUST	2							
3	2	172B12-37790	PISTON	2							
4	2	172B12-37800	RING, BACK UP	2							
5	2	172B12-37810	SEAL, ISI 65X75X6	2							
6	2	172B12-37820	SEAL, DUST65X75X11	2							
7	2	172B06-37951	NIPPLE,VALVE	2							

Remarks
* A : Y specifications have a slit for the identification.
S specifications do not have a slit for the identification.
Y specifications are shown in Fig.39.
The inner parts are not compatible.

N:Old $\xleftrightarrow[\text{No}]{\text{Yes}}$ New, Q:Old $\xleftrightarrow[\text{Yes}]{\text{No}}$ New, R:Old $\xleftrightarrow[\text{Yes}]{\text{Yes}}$ New, S:Old $\xleftrightarrow[\text{No}]{\text{No}}$ New, W:Add, Z:Discontinued, F:Interchangeable by set, K:Q'ty Change

Copyright (C) 2015 YANMAR CO., LTD. All RightsReserved.

Fig.40. CRAWLER

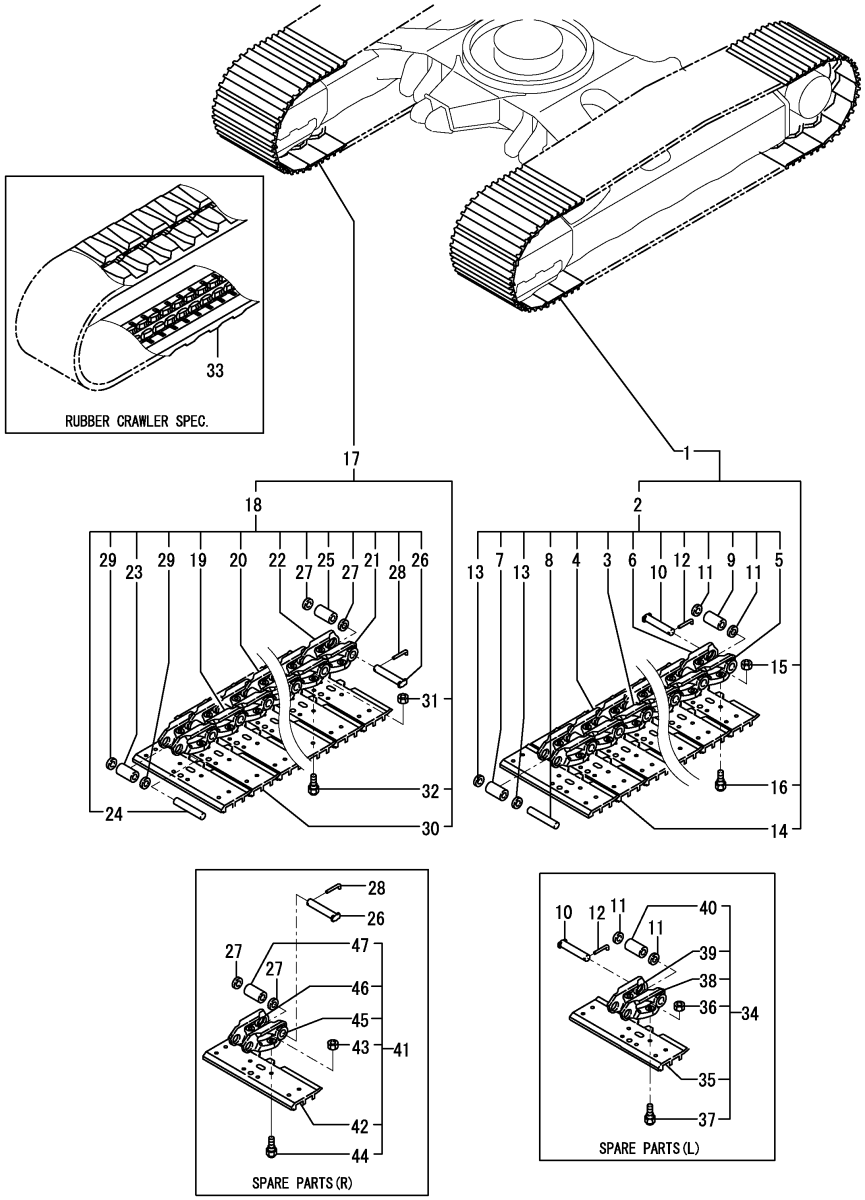

(A)=SV100-2A C(US)
(B)=
(C)=
(D)=
(E)=
(F)=

No.	Lev.	Parts No.	Description	Q'ty (A)	(B)	(C)	(D)	(E)	(F)	I	R
1	1	172499-38100-1	SHOE ASSY, TRACK 475	1							1
2	2	172499-38120	LINK ASSY	1							
3	3	172499-38180	LINK, TRUCK	37							
4	3	172499-38190	LINK, TRUCK	37							
5	3	172499-38200	LINK, MASTER	1							
6	3	172499-38210	LINK, MASTER	1							
7	3	172499-38220	BUSH, TRUCK	37							
8	3	172499-38230	PIN, TRUCK	37							
9	3	172499-38240	BUSH, MASTER	1							
10	3	172499-38250	PIN, MASTER	1							
11	3	172499-38260	COLLAR	2							
12	3	172499-38270	PIN, STOP	1							
13	3	172499-38280	SEAL	74							
14	2	172499-38130-1	PLATE, SHOE	38							
15	2	172499-38160	NUT, SHOE	152							
16	2	172499-38170	BOLT, SHOE	152							
17	1	172499-38110-1	SHOE ASSY, TRACK 475	1							1
18	2	172499-38120	LINK ASSY	1							
19	3	172499-38180	LINK, TRUCK	37							
20	3	172499-38190	LINK, TRUCK	37							
21	3	172499-38200	LINK, MASTER	1							
22	3	172499-38210	LINK, MASTER	1							
23	3	172499-38220	BUSH, TRUCK	37							
24	3	172499-38230	PIN, TRUCK	37							
25	3	172499-38240	BUSH, MASTER	1							
26	3	172499-38250	PIN, MASTER	1							
27	3	172499-38260	COLLAR	2							
28	3	172499-38270	PIN, STOP	1							
29	3	172499-38280	SEAL	74							
30	2	172499-38140-1	PLATE, SHOE	38							
31	2	172499-38160	NUT, SHOE	152							
32	2	172499-38170	BOLT, SHOE	152							
33	1	172499-38600	CRAWLER, RUBBER 485	2							2
34	1	172499-38300-1	TRACK ASSY, MASTER	1							3
35	2	172499-38130-1	PLATE, SHOE	1							
36	2	172499-38160	NUT, SHOE	4							
37	2	172499-38170	BOLT, SHOE	4							
38	2	172499-38200	LINK, MASTER	1							
39	2	172499-38210	LINK, MASTER	1							
40	2	172499-38240	BUSH, MASTER	1							
41	1	172499-38310-1	TRACK ASSY, MASTER	1							3
42	2	172499-38140-1	PLATE, SHOE	1							
43	2	172499-38160	NUT, SHOE	4							
44	2	172499-38170	BOLT, SHOE	4							
45	2	172499-38200	LINK, MASTER	1							
46	2	172499-38210	LINK, MASTER	1							
47	2	172499-38240	BUSH, MASTER	1							

Remarks
(1)Iron crawler specification.
(2)Rubber crawler specification.
(3)Spare parts.

N:Old $\overset{\text{Yes}}{\underset{\text{No}}{\leftrightarrow}}$ New, Q:Old $\overset{\text{No}}{\underset{\text{Yes}}{\leftrightarrow}}$ New, R:Old $\overset{\text{Yes}}{\underset{\text{Yes}}{\leftrightarrow}}$ New, S:Old $\overset{\text{No}}{\underset{\text{No}}{\leftrightarrow}}$ New, W:Add, Z:Discontinued, F:Interchangeable by set, K:Q'ty Change

Copyright (C) 2015 YANMAR CO., LTD. All RightsReserved.

Fig.41. TRAVEL LEVER

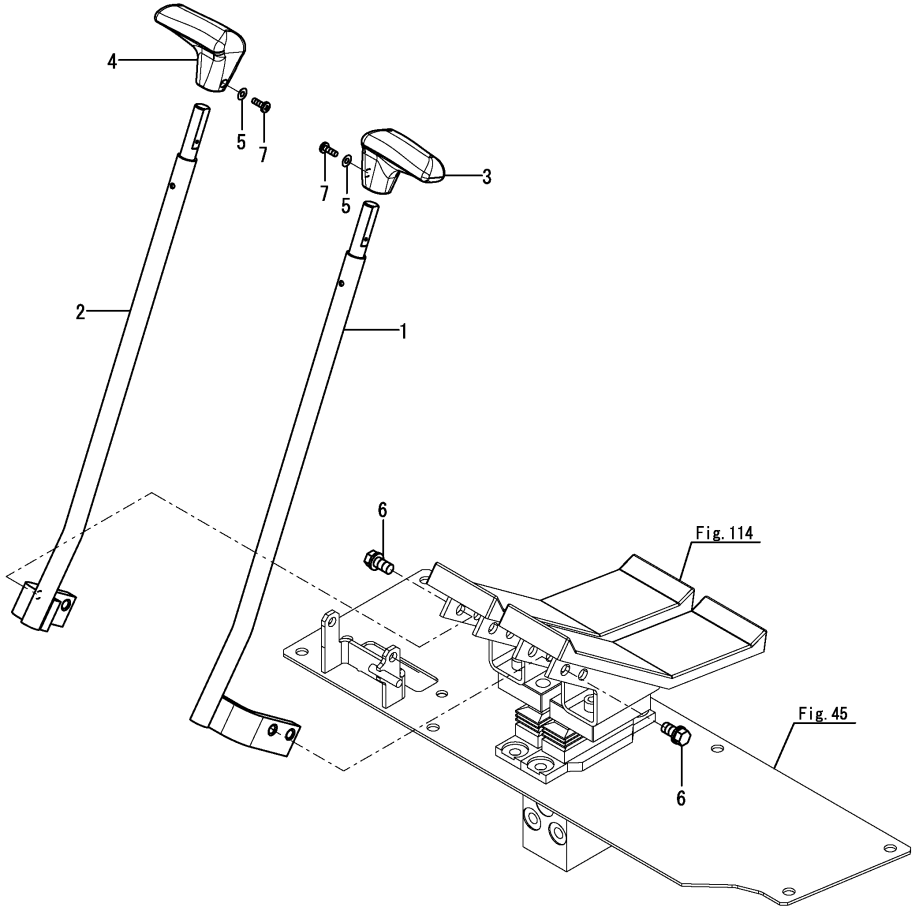

(A)=SV100-2A C(US) (D)=
(B)= (E)=
(C)= (F)=

No.	Lev.	Parts No.	Description	Q'ty (A)	(B)	(C)	(D)	(E)	(F)	I	R
1	1	172A69-45211	LEVER L ASSY,TRACK	1							
2	1	172A69-45251	LEVER R ASSY,TRACK	1							
3	1	172187-45870	GRIP, DRIVE	1							
4	1	172187-45880	GRIP, DRIVE	1							
5	1	22117-040000	WASHER, 4	2							
6	1	26013-100202	BOLT, SPRING M10X 20	4							
7	1	26587-040122	SCREW, M4X12	2							

N:Old $\overset{\text{Yes}}{\underset{\text{No}}{\leftrightarrows}}$ New, Q:Old $\overset{\text{No}}{\underset{\text{Yes}}{\leftrightarrows}}$ New, R:Old $\overset{\text{Yes}}{\underset{\text{Yes}}{\leftrightarrows}}$ New, S:Old $\overset{\text{No}}{\underset{\text{No}}{\leftrightarrows}}$ New, W:Add, Z:Discontinued, F:Interchangeable by set, K:Q'ty Change

Copyright (C) 2015 YANMAR CO., LTD. All RightsReserved.

Fig.42. BLADE LEVER

(A)=SV100-2A C(US) (D)=
(B)= (E)=
(C)= (F)=

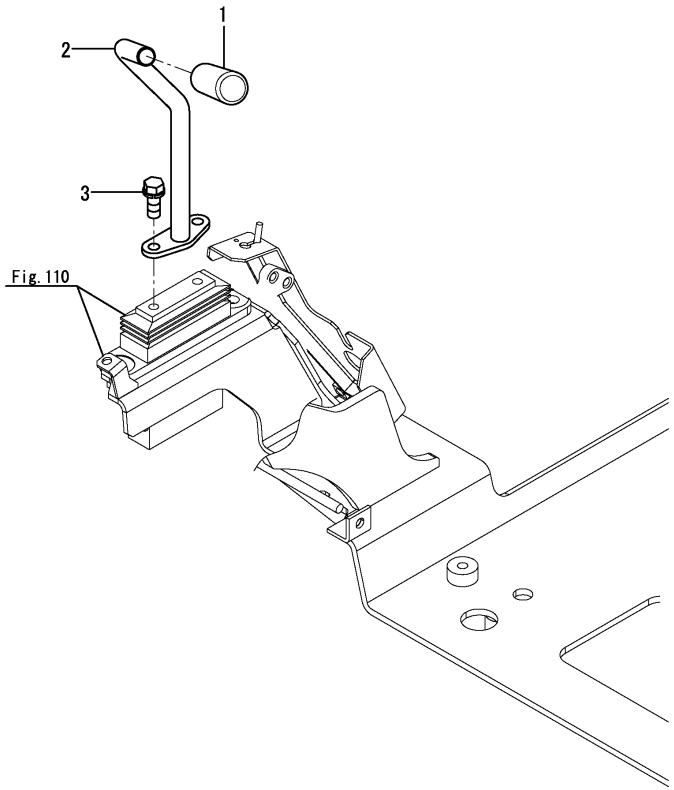

No.	Lev.	Parts No.	Description	Q'ty (A)	(B)	(C)	(D)	(E)	(F)	I	R
1	1	172964-12140	GRIP	1							
2	1	172A69-45851	LEVER ASSY,BLADE	1							
3	1	26013-080162	BOLT, SPRING M8X 16	2							

N:Old ◄Yes/No► New, Q:Old ◄No/Yes► New, R:Old ◄Yes/Yes► New, S:Old ◄No/No► New, W:Add, Z:Discontinued, F:Interchangeable by set, K:Q'ty Change

Copyright (C) 2015 YANMAR CO., LTD. All RightsReserved.

Fig.43. SWING PEDAL

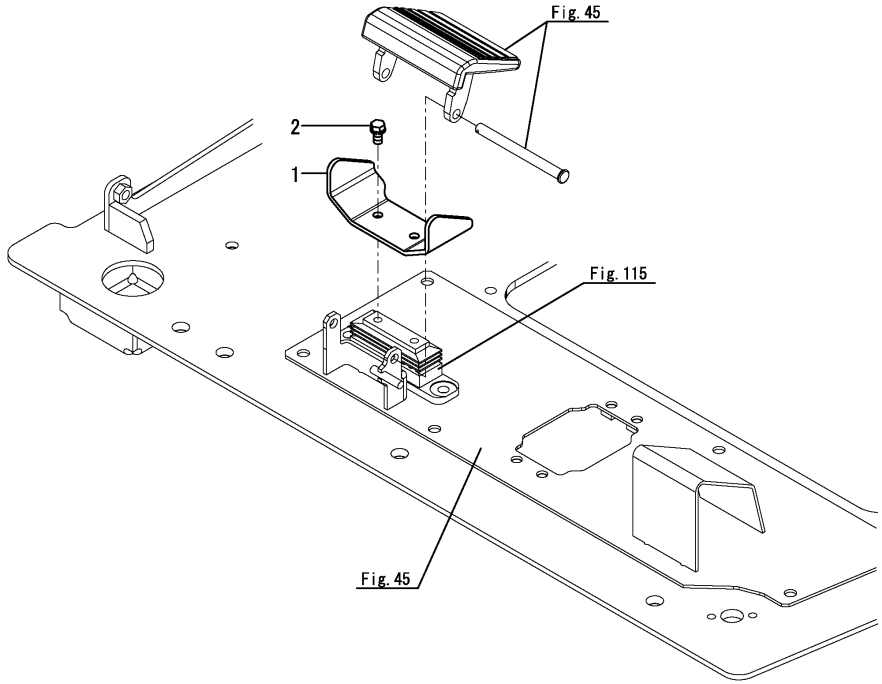

(A)=SV100-2A C(US) (D)=
(B)= (E)=
(C)= (F)=

No.	Lev.	Parts No.	Description	Q'ty (A)	(B)	(C)	(D)	(E)	(F)	I	R
1	1	172A69-45350	PEDAL, SWING	1							
2	1	26013-080162	BOLT, SPRING M8X 16	2							

N:Old $\xleftrightarrow[\text{No}]{\text{Yes}}$ New, Q:Old $\xleftrightarrow[\text{Yes}]{\text{No}}$ New, R:Old $\xleftrightarrow[\text{Yes}]{\text{Yes}}$ New, S:Old $\xleftrightarrow[\text{No}]{\text{No}}$ New, W:Add, Z:Discontinued, F:Interchangeable by set, K:Q'ty Change

Copyright (C) 2015 YANMAR CO., LTD. All RightsReserved.

Fig.44. LOCK LEVER & LEVER STAND

(A)=SV100-2A C(US)
(B)=
(C)=
(D)=
(E)=
(F)=

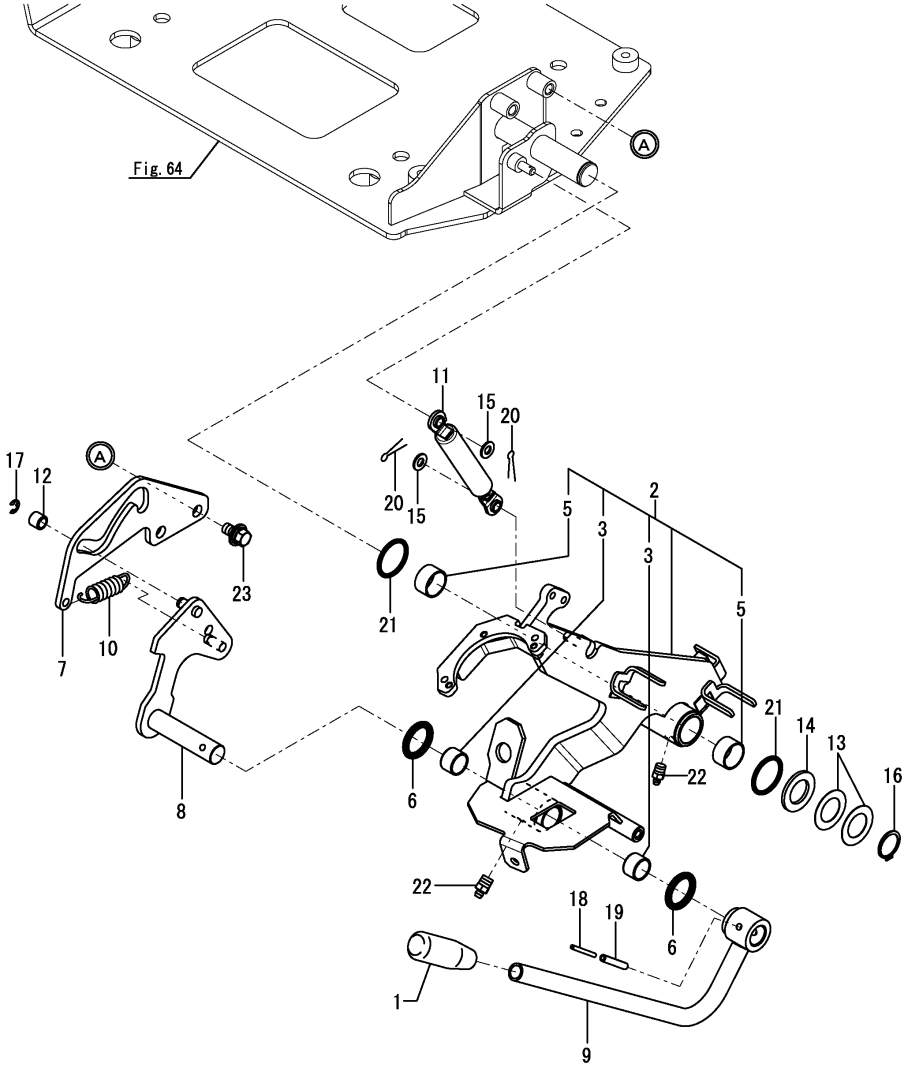

No.	Lev.	Parts No.	Description	Q'ty (A)	(B)	(C)	(D)	(E)	(F)	I	R
1	1	172A77-46050	GRIP	1							
2	1	172A69-46101	STAND ASSY, LEVER	1							
3	2	172141-41370	BUSH	2							
5	2	24550-025150	BUSH, 25X15	2							
6	1	172124-46200	O-RING	2							
7	1	172A69-46210	GUIDE, LOCK	1							
8	1	172A69-46220	ROD ASSY, SPRING	1							
9	1	172A69-46251	LEVER ASSY, LOCK	1							
10	1	172A69-46270	SPRING	1							
11	1	172455-46890	SPRING, GAS	1							
12	1	172165-47550	BUSH	1							
13	1	172165-47980	SHIM	2							
14	1	172165-47990	WASHER	1							
15	1	22137-080000	WASHER, 8	2							
16	1	22242-000250	RING, 25	1							
17	1	22272-000070	RING, E- 7	1							
18	1	22351-035040	PIN, SPRING 3.5X40	1							
19	1	22351-060040	PIN, SPRING 6.0X40	1							
20	1	22417-200200	PIN, COTTER 2.0X20	2							
21	1	24311-000340	O-RING, 1AP34.0	2							
22	1	24761-020000	NIPPLE, GREASE PT1/8	2							
23	1	26014-100202	BOLT, M10X 20	2							

N:Old $\xleftarrow[\text{No}]{\text{Yes}}$ New, Q:Old $\xleftarrow[\text{Yes}]{\text{No}}$ New, R:Old $\xleftrightarrow[\text{Yes}]{\text{Yes}}$ New, S:Old $\xleftrightarrow[\text{No}]{\text{No}}$ New, W:Add, Z:Discontinued, F:Interchangeable by set, K:Q'ty Change

Copyright (C) 2015 YANMAR CO., LTD. All RightsReserved.

Fig.45. PEDAL STAND

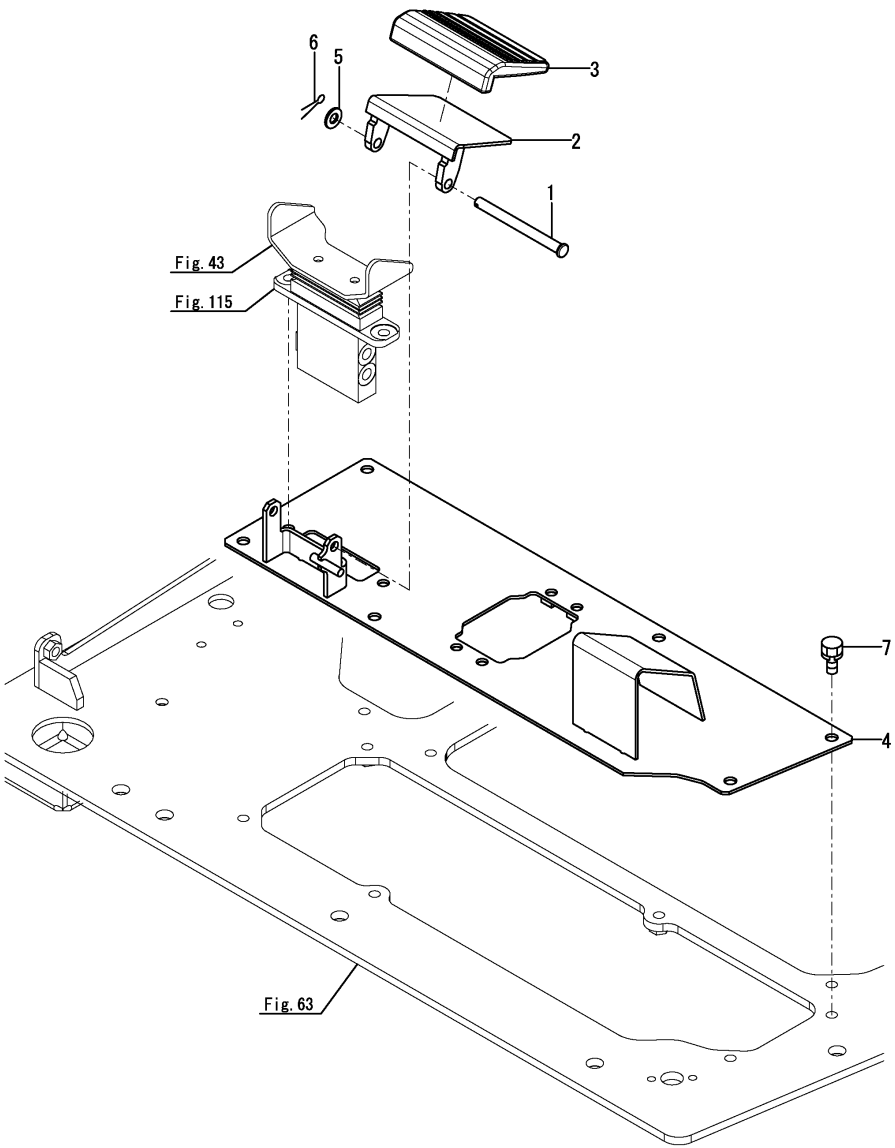

(A)=SV100-2A C(US) (D)=
(B)= (E)=
(C)= (F)=

No.	Lev.	Parts No.	Description	Q'ty (A)	(B)	(C)	(D)	(E)	(F)	I	R
1	1	172187-45651	SHAFT	1							
2	1	172187-45720-2	COVER, PEDAL	1							
3	1	172187-45760	PAD	1							
4	1	172A69-45800	PLATE, PEDAL	1							
5	1	22137-100000	WASHER, 10	1							
6	1	22417-250200	PIN, COTTER 2.5X20	1							
7	1	26013-100252	BOLT, SPRING M10X 25	6							

N:Old $\overset{\text{Yes}}{\underset{\text{No}}{\leftrightarrow}}$ New, Q:Old $\overset{\text{No}}{\underset{\text{Yes}}{\leftrightarrow}}$ New, R:Old $\overset{\text{Yes}}{\underset{\text{Yes}}{\leftrightarrow}}$ New, S:Old $\overset{\text{No}}{\underset{\text{No}}{\leftrightarrow}}$ New, W:Add, Z:Discontinued, F:Interchangeable by set, K:Q'ty Change

Copyright (C) 2015 YANMAR CO., LTD. All RightsReserved.

Fig.46. ARMREST

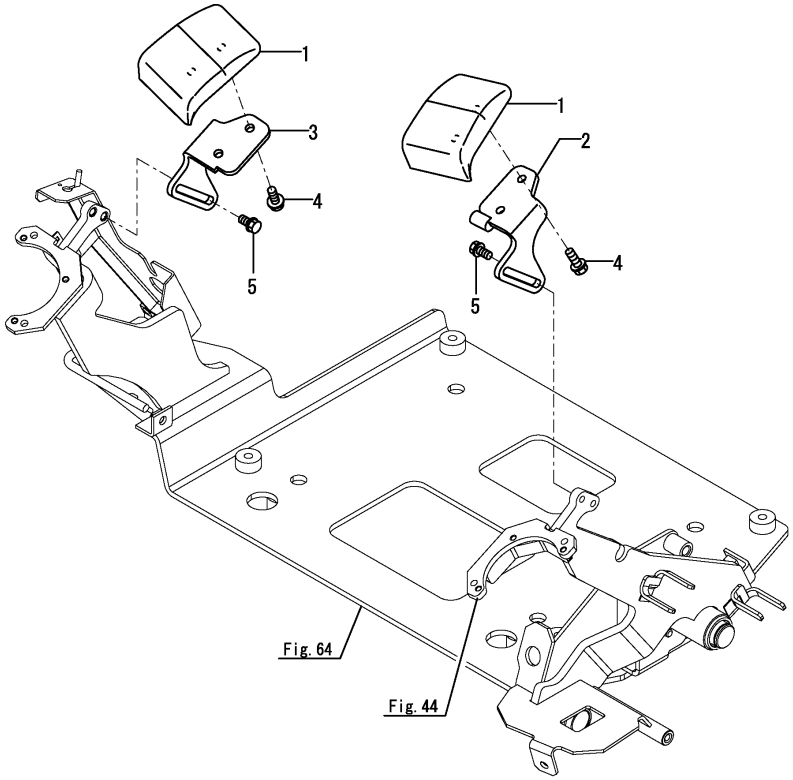

(A)=SV100-2A C(US) (D)=
(B)= (E)=
(C)= (F)=

No.	Lev.	Parts No.	Description	Q'ty (A)	(B)	(C)	(D)	(E)	(F)	I	R
1	1	172441-44320	ARMREST	2							
2	1	172A46-46500	GUIDE ASSY	1							
3	1	172A46-46530	PLATE, GUIDE	1							
4	1	172519-63240	BOLT	4							
5	1	172519-63240	BOLT	4							

N:Old $\xleftrightarrow[\text{No}]{\text{Yes}}$ New, Q:Old $\xleftrightarrow[\text{Yes}]{\text{No}}$ New, R:Old $\xleftrightarrow[\text{Yes}]{\text{Yes}}$ New, S:Old $\xleftrightarrow[\text{No}]{\text{No}}$ New, W:Add, Z:Discontinued, F:Interchangeable by set, K:Q'ty Change

Copyright (C) 2015 YANMAR CO., LTD. All RightsReserved.

Fig.47. TRAVEL FRAME

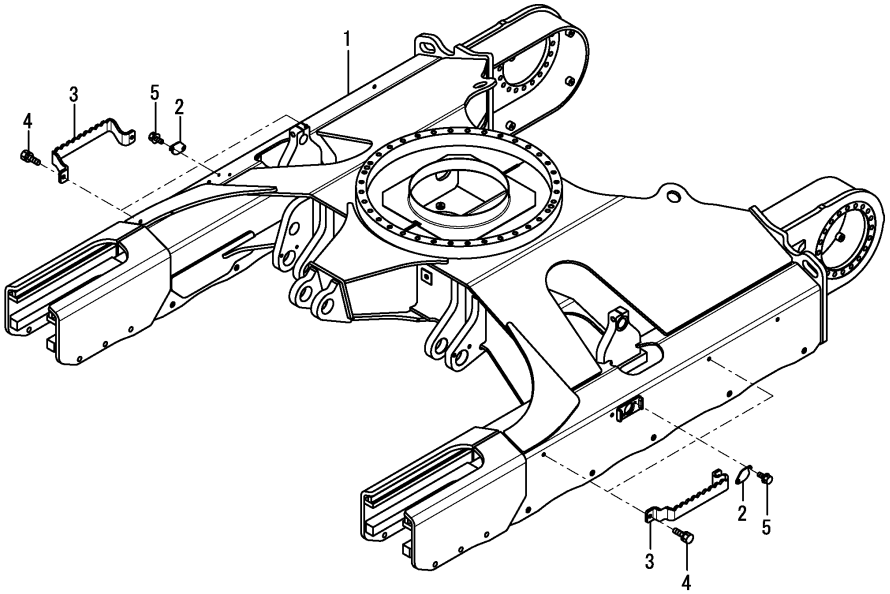

(A)=SV100-2A C(US) (D)=
(B)= (E)=
(C)= (F)=

No.	Lev.	Parts No.	Description	Q'ty (A)	(B)	(C)	(D)	(E)	(F)	I	R
1	1	172A69-50101	FRAME ASSY	1							
2	1	172458-50480-2	COVER, FRAME	2							
3	1	172A69-50670	STEP	4							
4	1	26013-120352	BOLT, SPRING M12X 35	8							
5	1	26106-100122	BOLT, M10X 12 PLATED	4							

N:Old $\xleftrightarrow[\text{No}]{\text{Yes}}$ New, Q:Old $\xleftrightarrow[\text{Yes}]{\text{No}}$ New, R:Old $\xleftrightarrow[\text{Yes}]{\text{Yes}}$ New, S:Old $\xleftrightarrow[\text{No}]{\text{No}}$ New, W:Add, Z:Discontinued, F:Interchangeable by set, K:Q'ty Change

Copyright (C) 2015 YANMAR CO., LTD. All RightsReserved.

Fig.48. CRAWLER GUARD

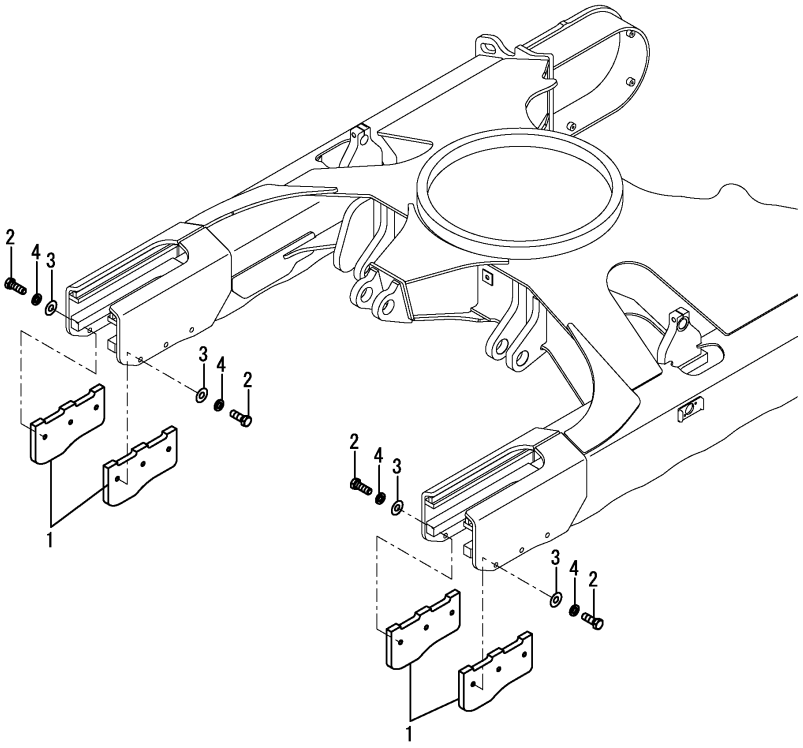

(A)=SV100-2A C(US)
(B)=
(C)=
(D)=
(E)=
(F)=

No.	Lev.	Parts No.	Description	Q'ty (A)	(B)	(C)	(D)	(E)	(F)	I	R
1	1	172499-50800-1	GUARD, CRAWLER	4							
2	1	172460-73320	BOLT	12							
3	1	22137-160000	WASHER, 16	12							
4	1	22217-160000	WASHER, SPRING 16	12							

N:Old $\xleftrightarrow[\text{No}]{\text{Yes}}$ New, Q:Old $\xleftrightarrow[\text{Yes}]{\text{No}}$ New, R:Old $\xleftrightarrow[\text{Yes}]{\text{Yes}}$ New, S:Old $\xleftrightarrow[\text{No}]{\text{No}}$ New, W:Add, Z:Discontinued, F:Interchangeable by set, K:Q'ty Change

Copyright (C) 2015 YANMAR CO., LTD. All RightsReserved.

Fig.49. COUNTER WEIGHT

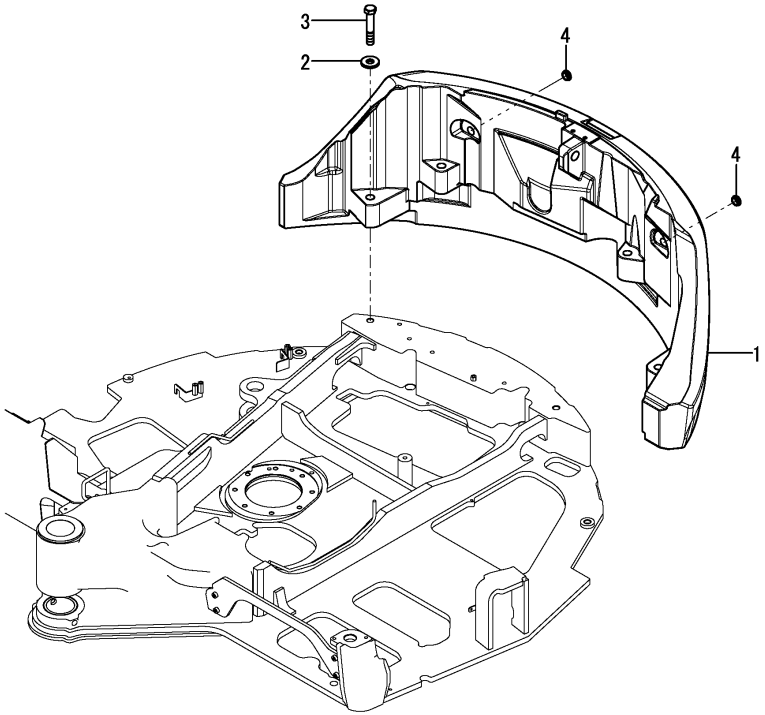

(A)=SV100-2A C(US)
(B)=
(C)=
(D)=
(E)=
(F)=

No.	Lev.	Parts No.	Description	Q'ty (A)	(B)	(C)	(D)	(E)	(F)	I	R
1	1	172B12-53310	WEIGHT, COUNTER	1							
2	1	172187-53321	WASHER	4							
3	1	172455-53331	BOLT	4							
4	1	172456-53700	GROMMET	2							

N:Old $\frac{\text{Yes}}{\text{No}}$ New, Q:Old $\frac{\text{No}}{\text{Yes}}$ New, R:Old $\frac{\text{Yes}}{\text{Yes}}$ New, S:Old $\frac{\text{No}}{\text{No}}$ New, W:Add, Z:Discontinued, F:Interchangeable by set, K:Q'ty Change

Copyright (C) 2015 YANMAR CO., LTD. All RightsReserved.

Fig.50. TURNING FRAME

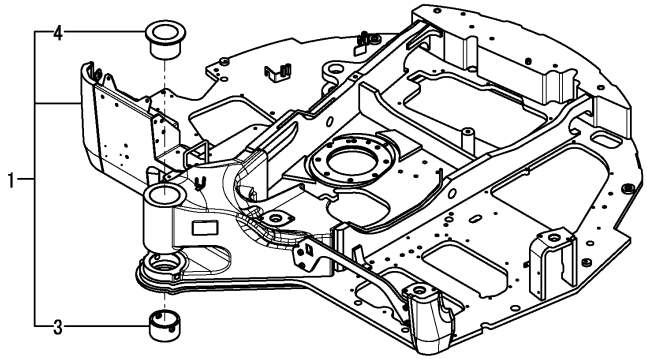

(A)=SV100-2A C(US) (D)=
(B)= (E)=
(C)= (F)=

No.	Lev.	Parts No.	Description	Q'ty (A)	(B)	(C)	(D)	(E)	(F)	I	R
1	1	172B12-54100	FRAME ASSY,TURNING	1							
3	2	172A69-54700	BUSH	1							
4	2	172A69-54710	BUSH	1							

N:Old $\xleftrightarrow[\text{No}]{\text{Yes}}$ New, Q:Old $\xleftrightarrow[\text{Yes}]{\text{No}}$ New, R:Old $\xleftrightarrow[\text{Yes}]{\text{Yes}}$ New, S:Old $\xleftrightarrow[\text{No}]{\text{No}}$ New, W:Add, Z:Discontinued, F:Interchangeable by set, K:Q'ty Change

Copyright (C) 2015 YANMAR CO., LTD. All RightsReserved.

Fig.51. TURNING BEARING

(A)=SV100-2A C(US) (D)=
(B)= (E)=
(C)= (F)=

No.	Lev.	Parts No.	Description	Q'ty (A)	(B)	(C)	(D)	(E)	(F)	I	R
1	1	172A69-57600	BEARING ASSY	1							
3	2	172A69-57620	SEAL	2							
4	1	172A69-57650	BOLT	36							
5	1	172162-57660	PIN, PARALLEL	4							
6	1	172A69-57660	BOLT	34							

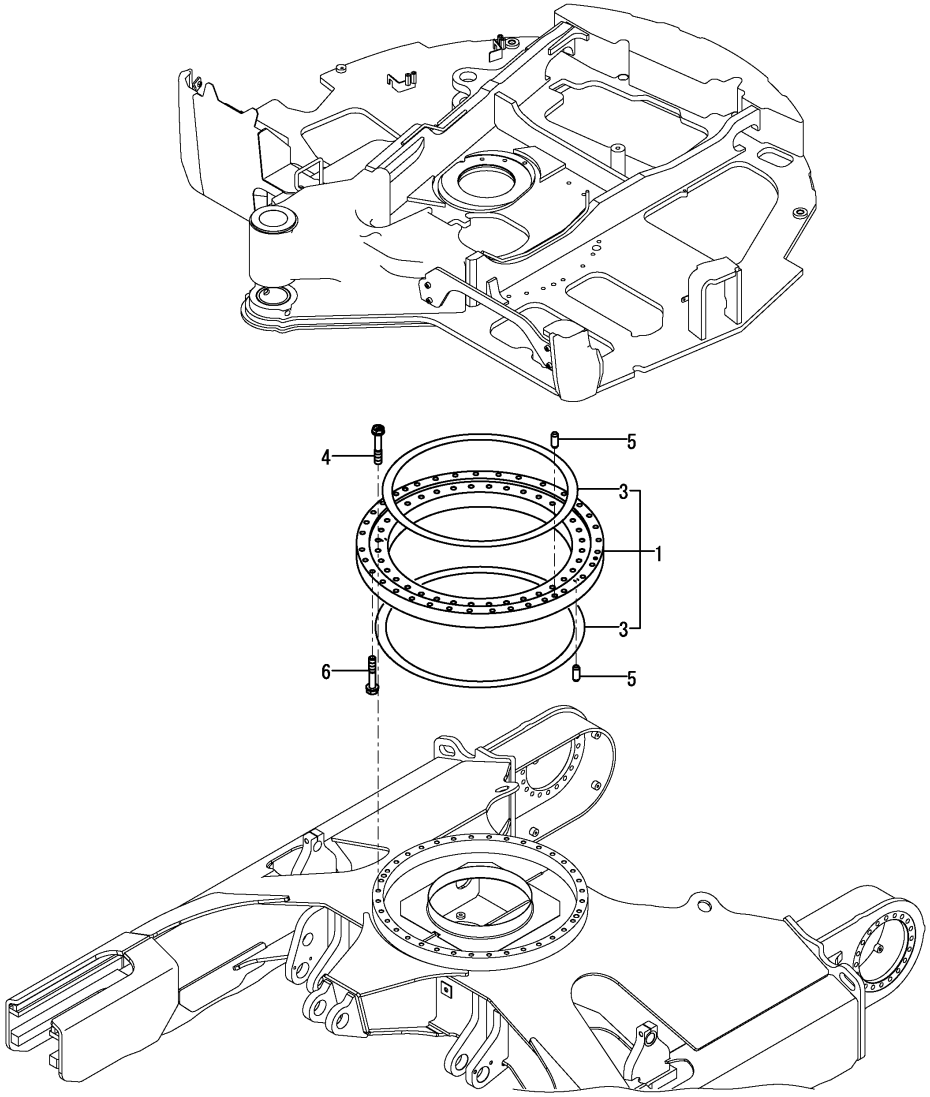

N:Old $\xleftarrow[\text{No}]{\text{Yes}}$ New, Q:Old $\xleftarrow[\text{Yes}]{\text{No}}$ New, R:Old $\xleftarrow[\text{Yes}]{\text{Yes}}$ New, S:Old $\xleftarrow[\text{No}]{\text{No}}$ New, W:Add, Z:Discontinued, F:Interchangeable by set, K:Q'ty Change

Copyright (C) 2015 YANMAR CO., LTD. All RightsReserved.

Fig.52. COVER(FUEL TANK SIDE)

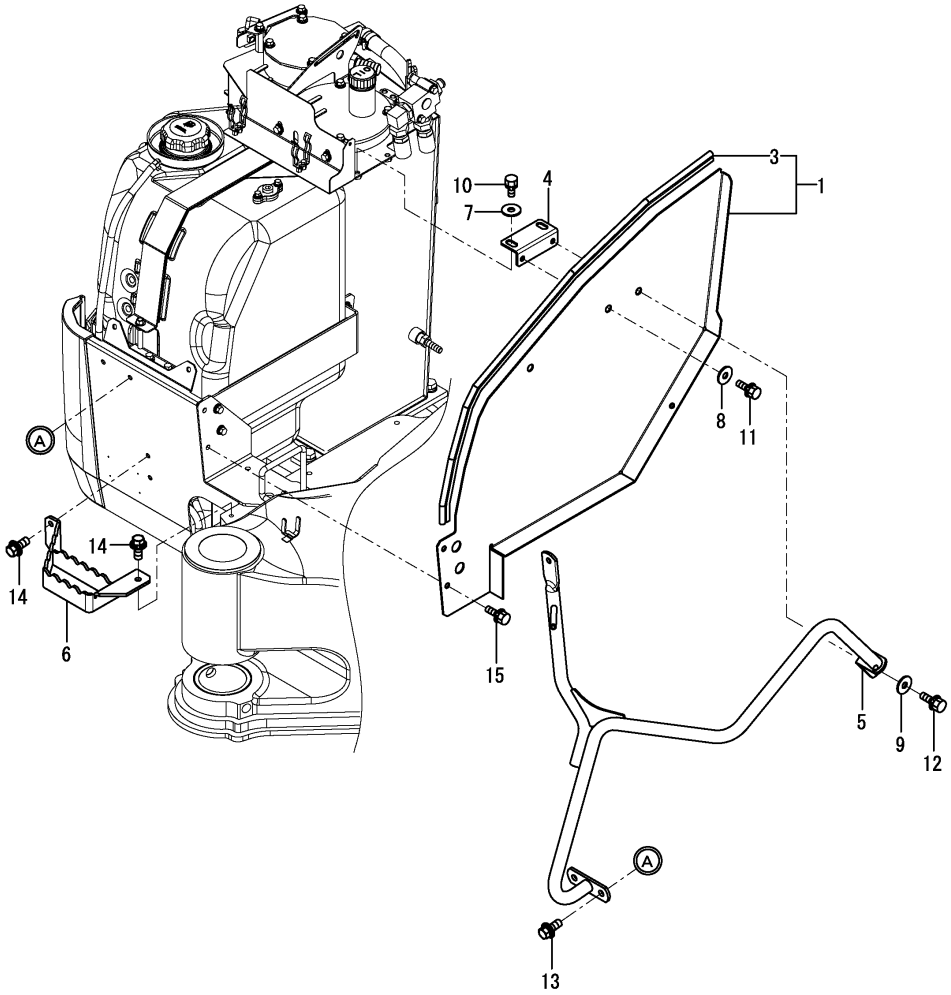

(A)=SV100-2A C(US) (D)=
(B)= (E)=
(C)= (F)=

No.	Lev.	Parts No.	Description	Q'ty (A)	(B)	(C)	(D)	(E)	(F)	I	R
1	1	172B11-61600	COVER ASSY,FO	1							
3	2	172B11-61650	SEAL,1060	1							
4	1	172B11-61660	STAY ASSY,COVER	1							
5	1	172B11-61830	GRIP ASSY, MIRROR	1							
6	1	172A69-62050	STEP ASSY	1							
7	1	22157-100000	WASHER, 10	2							
8	1	22157-100000	WASHER, 10	1							
9	1	22157-100000	WASHER, 10	1							
10	1	26013-100252	BOLT, SPRING M10X 25	2							
11	1	26013-100252	BOLT, SPRING M10X 25	1							
12	1	26013-100252	BOLT, SPRING M10X 25	1							
13	1	26014-100252	BOLT, M10X 25	2							
14	1	26014-100252	BOLT, M10X 25	3							
15	1	26014-100252	BOLT, M10X 25	2							

N:Old $\frac{\text{Yes}}{\text{No}}$ New, Q:Old $\frac{\text{No}}{\text{Yes}}$ New, R:Old $\frac{\text{Yes}}{\text{Yes}}$ New, S:Old $\frac{\text{No}}{\text{No}}$ New, W:Add, Z:Discontinued, F:Interchangeable by set, K:Q'ty Change

Copyright (C) 2015 YANMAR CO., LTD. All RightsReserved.

Fig.53. TAIL COVER

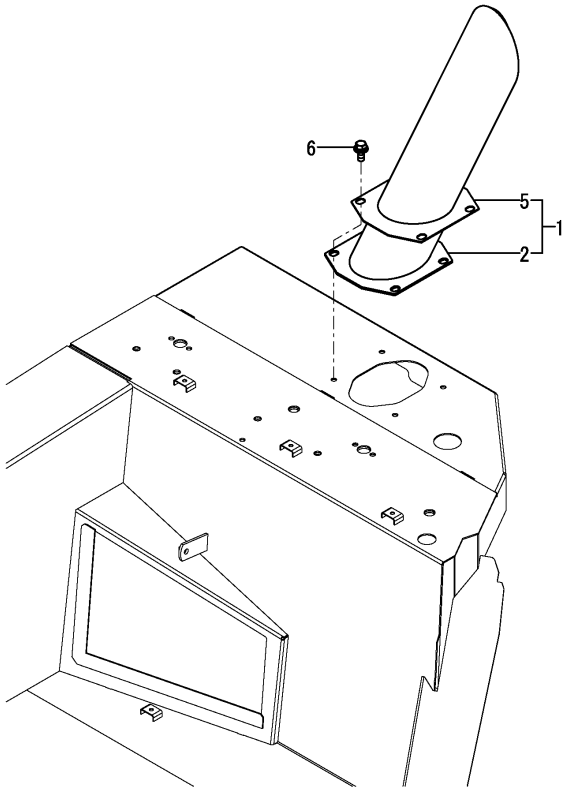

(A)=SV100-2A C(US) (D)=
(B)= (E)=
(C)= (F)=

No.	Lev.	Parts No.	Description	Q'ty (A)	(B)	(C)	(D)	(E)	(F)	I	R
1	1	172B11-61900	COVER ASSY, TAIL	1							
2	2	172B11-61910	COVER ASSY, TAIL A	1							
5	2	172B11-61950	COVER ASSY, TAIL B	1							
6	1	26014-080202	BOLT, M8X 20	4							

N:Old $\xleftrightarrow[\text{No}]{\text{Yes}}$ New, Q:Old $\xleftrightarrow[\text{Yes}]{\text{No}}$ New, R:Old $\xleftrightarrow[\text{Yes}]{\text{Yes}}$ New, S:Old $\xleftrightarrow[\text{No}]{\text{No}}$ New, W:Add, Z:Discontinued, F:Interchangeable by set, K:Q'ty Change

Copyright (C) 2015 YANMAR CO., LTD. All RightsReserved.

Fig.54. CENTER COVER

(A)=SV100-2A C(US)
(B)=
(C)=
(D)=
(E)=
(F)=

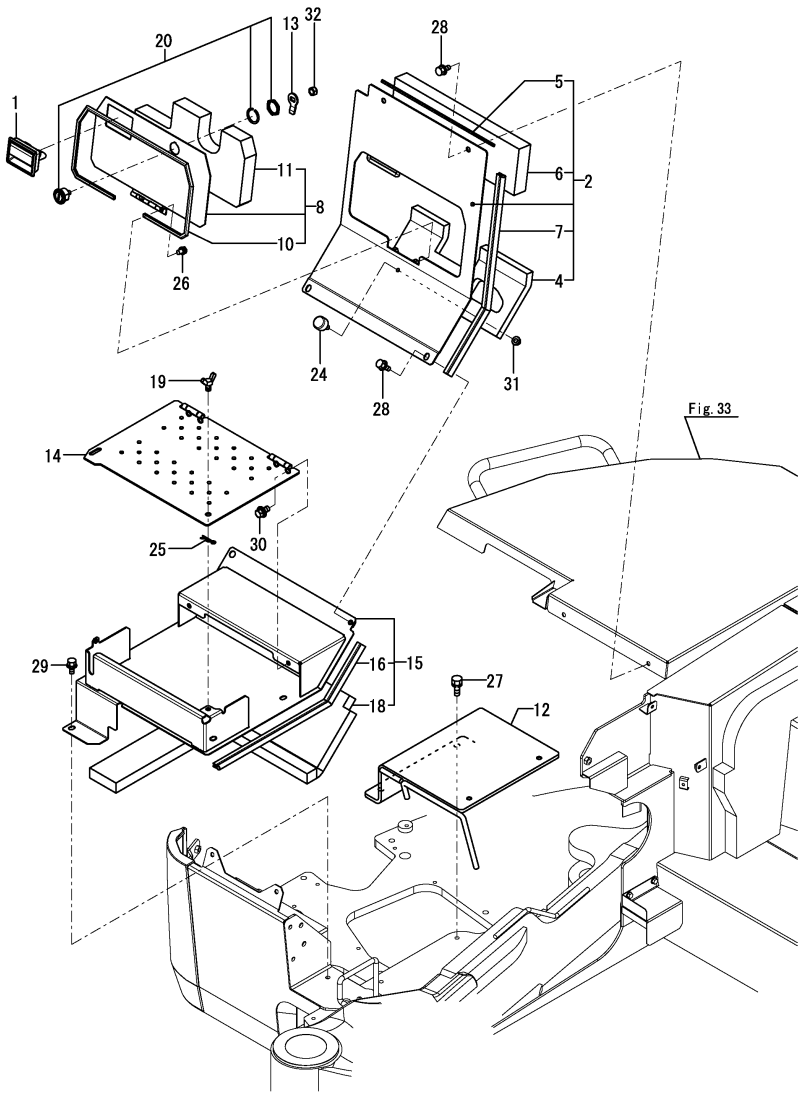

No.	Lev.	Parts No.	Description	Q'ty (A)	(B)	(C)	(D)	(E)	(F)	I	R
1	1	172187-61421	HANDLE, LOCK	1							4
1-1	1	172B02-69040	HANDLE,LOCK BLACK	1						S	5
	(A=MAF001)										
2	1	172B12-61680	COVER ASSY, CENTER	1							1
4	2	172B11-61720	SPONGE, A COVER	1							
5	2	172B11-61730	SEAL, 385	1							
6	2	172B12-61760	SPONGE,B COVER	1							
7	2	172A64-64940	SEAL, 560	1							
7A	1	172B03-03390	LABEL,SILENCER EX	1							3
7B	1	172A36-03411	LABEL, ENGINE ROOM	1							3
8	1	172B12-61750	COVER ASSY,ENG	1							2
10	2	172A69-61780	SEAL	1							
11	2	172B12-61790	SPONGE, ENG COVER	1							
11A	1	172437-03402	LABEL, ENGINE COVER	1							3
12	1	172A69-61801	BRACKET ASSY,COVER	1							
13	1	172B11-61800	PLATE, LOCK	1							
14	1	172A89-61880	COVER ASSY, TOOL BOX	1							
15	1	172B12-61900	BASE ASSY, TOOL BOX	1							
16	2	172A69-13690	SEAL	1							
18	2	172B12-61910	SPONGE, TOOL BOX	1							
19	1	172142-62301	BOLT, WING	1							
20	1	172B03-66170	CYLINDER ASSY, KEY	1							
24	1	172176-67150	RUBBER, STOPPER	1							
25	1	22372-100000	PIN, SNAP 10	1							
26	1	26013-080122	BOLT, SPRING M8X 12	2							
27	1	26013-120302	BOLT, SPRING M12X 30	2							
28	1	26014-100202	BOLT, M10X 20	4							
29	1	26014-100202	BOLT, M10X 20	3							
30	1	26014-100202	BOLT, M10X 20	2							
31	1	26051-080002	NUT, M8	1							
32	1	26347-100002	NUT, M10	1							

Remarks
(1)Attach the No.7A & 7B label to this part.
(2)Attach the No.11A label to this part.
(3)Label is not illustrated.
(4)Color = DARK OLIVE GRAY.
(5)Color = BLACK.

N:Old $\xleftrightarrow[\text{No}]{\text{Yes}}$ New, Q:Old $\xleftrightarrow[\text{Yes}]{\text{No}}$ New, R:Old $\xleftrightarrow[\text{Yes}]{\text{Yes}}$ New, S:Old $\xleftrightarrow[\text{No}]{\text{No}}$ New, W:Add, Z:Discontinued, F:Interchangeable by set, K:Q'ty Change

Copyright (C) 2015 YANMAR CO., LTD. All RightsReserved.

Fig.55. COVER(SEAT MOUNT)

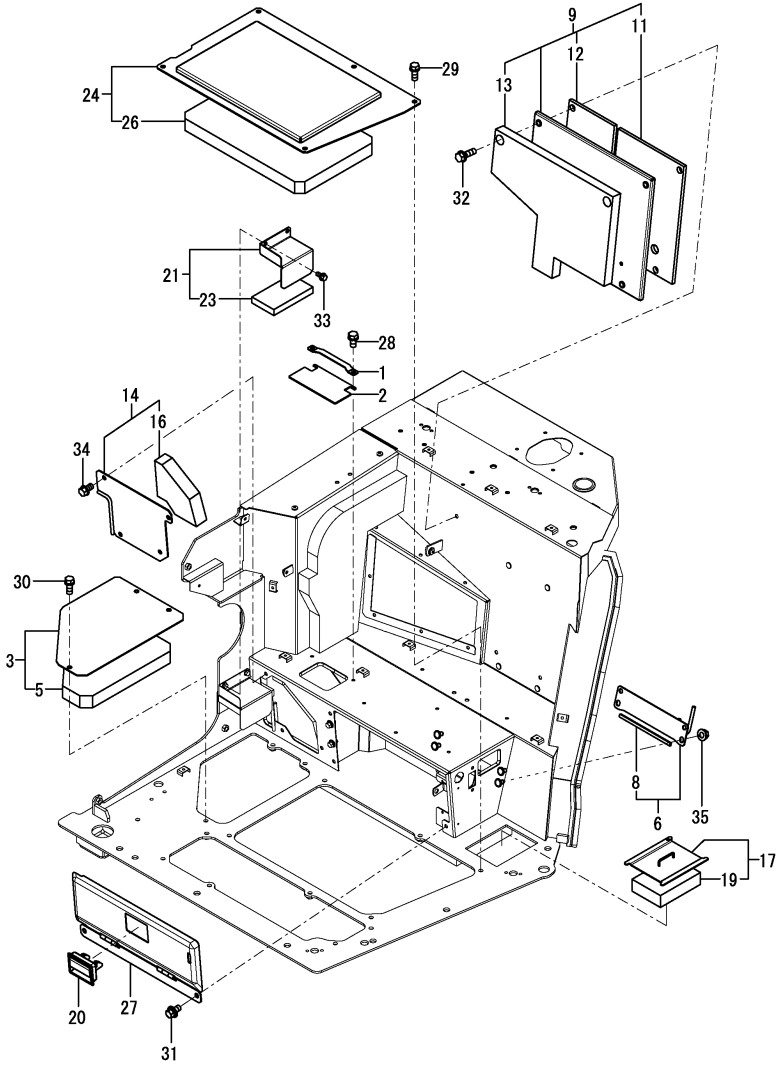

(A)=SV100-2A C(US) (D)=
(B)= (E)=
(C)= (F)=

No.	Lev.	Parts No.	Description	Q'ty (A)	(B)	(C)	(D)	(E)	(F)	I	R
1	1	172A69-61010	BRACKET, PLATE	1							
2	1	172A69-61020	PLATE, RUBBER	1							
3	1	172B11-61050	PLATE ASSY	1							
5	2	172B11-61060	SPONGE, PLATE	1							
6	1	172B11-61150	COVER ASSY,P HOSE	1							
8	2	172A65-64840	SEAL, 190	1							
9	1	172B12-61180	COVER ASSY,SEAT REAR	1							
11	2	172B12-61220	SPONGE,SEAT REAR COV	1							
12	2	172B12-61240	SPONGE,SEAT REAR COV	1							
13	2	172B12-61260	SPONGE,SEAT REAR COV	1							
14	1	172B11-61240	COVER ASSY,AC HOSE	1							
16	2	172B11-61280	SPONGE,AC HOSE COVER	1							
17	1	172B11-61300	COVER ASSY,MULTI	1							
19	2	172B11-61330	SPONGE,MULTI COVER	1							
20	1	172187-61421	HANDLE, LOCK	1							3
20-1	1	172B02-69040	HANDLE,LOCK BLACK	1						S	4
	(A=MAF001)										
21	1	172B11-61420	COVER ASSY, FLOOR MA	1							
23	2	172B11-61470	SPONGE,MAT COVER	1							
24	1	172B11-62200	STEP ASSY	1							
26	2	172B11-62210	SPONGE, STEP	1							
27	1	172A69-64760	COVER ASSY	1							1
27A	1	172437-03601	LABEL, 2-WAY US	1							2
28	1	26013-080162	BOLT, SPRING M8X 16	2							
29	1	26013-100252	BOLT, SPRING M10X 25	5							
30	1	26013-100252	BOLT, SPRING M10X 25	3							
31	1	26014-100202	BOLT, M10X 20	2							
32	1	26014-100302	BOLT, M10X 30	4							
33	1	26106-080162	BOLT, M8X 16 PLATED	2							
34	1	26106-100162	BOLT, M10X 16 PLATED	4							
35	1	26366-100002	NUT, M10	4							

Remarks
(1)Attach the No.27A label to this part.
(2)Label is not illustrated.
(3)Color = DARK OLIVE GRAY.
(4)Color = BLACK.

N:Old $\xleftarrow[\text{No}]{\text{Yes}}$ New, Q:Old $\xleftarrow[\text{Yes}]{\text{No}}$ New, R:Old $\xleftarrow[\text{Yes}]{\text{Yes}}$ New, S:Old $\xleftarrow[\text{No}]{\text{No}}$ New, W:Add, Z:Discontinued, F:Interchangeable by set, K:Q'ty Change

Copyright (C) 2015 YANMAR CO., LTD. All RightsReserved.

Fig.56. COVER(TURNING FRAME)

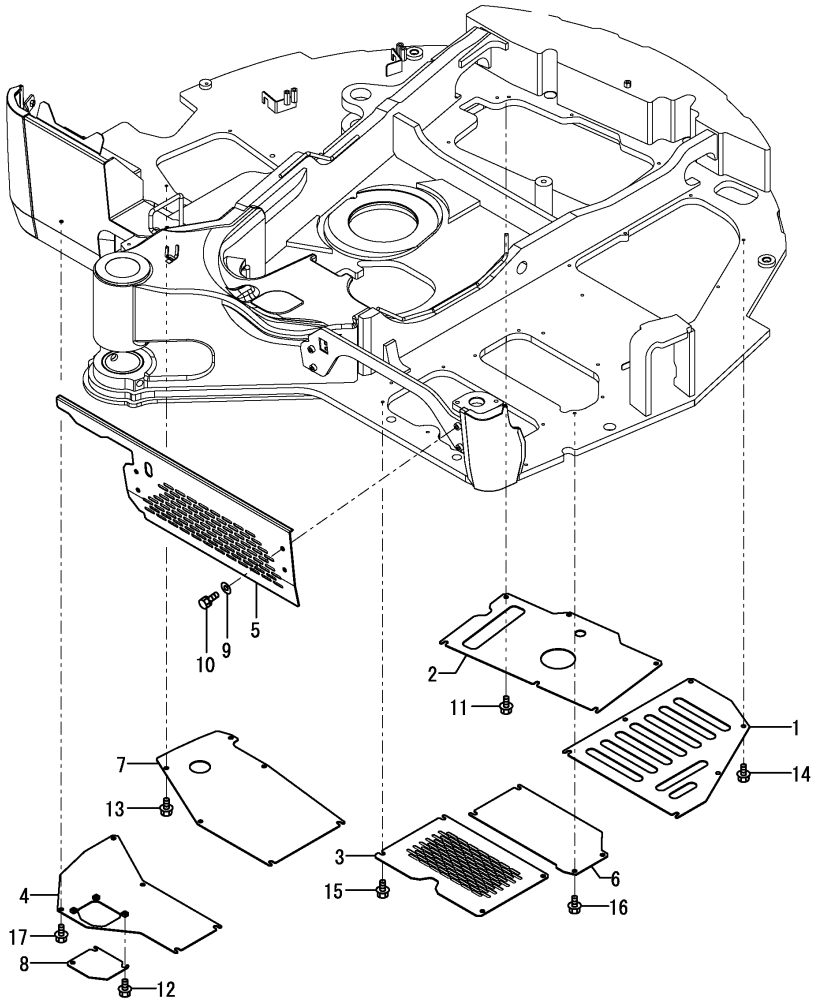

(A)=SV100-2A C(US)
(B)=
(C)=
(D)=
(E)=
(F)=

No.	Lev.	Parts No.	Description	Q'ty (A)	(B)	(C)	(D)	(E)	(F)	I	R
1	1	172A69-61480	COVER, PUMP	1							
2	1	172A69-61500	COVER, OIL SUMP	1							
3	1	172A89-61520-N	COVER, A C/V	1							
4	1	172A69-61530	COVER ASSY, FUEL	1							
5	1	172B12-61550	COVER,FRAME FL	1							
6	1	172B12-61560	COVER, C/V B	1							
7	1	172A69-61570	COVER, RESERVOIR	1							
8	1	172A69-61580	COVER, DRAIN	1							
9	1	22137-100000	WASHER, 10	4							
10	1	26013-100162	BOLT, SPRING M10X 16	4							
11	1	26106-100162	BOLT, M10X 16 PLATED	6							
12	1	26106-100162	BOLT, M10X 16 PLATED	3							
13	1	26106-100162	BOLT, M10X 16 PLATED	6							
14	1	26106-100162	BOLT, M10X 16 PLATED	6							
15	1	26106-100162	BOLT, M10X 16 PLATED	4							
16	1	26106-100162	BOLT, M10X 16 PLATED	4							
17	1	26106-100162	BOLT, M10X 16 PLATED	5							

N:Old $\frac{\text{Yes}}{\text{No}}$ New, Q:Old $\frac{\text{No}}{\text{Yes}}$ New, R:Old $\frac{\text{Yes}}{\text{Yes}}$ New, S:Old $\frac{\text{No}}{\text{No}}$ New, W:Add, Z:Discontinued, F:Interchangeable by set, K:Q'ty Change

Copyright (C) 2015 YANMAR CO., LTD. All RightsReserved.

Fig.57. COVER(TRAVEL FRAME)

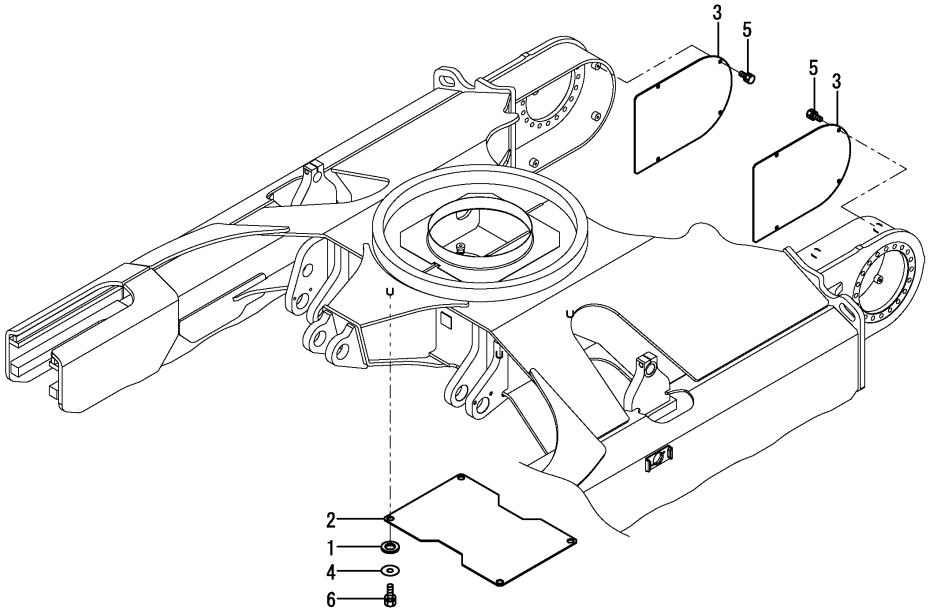

(A)=SV100-2A C(US) (D)=
(B)= (E)=
(C)= (F)=

No.	Lev.	Parts No.	Description	Q'ty (A)	(B)	(C)	(D)	(E)	(F)	I	R
1	1	172162-61500	TRIM	4							
2	1	172187-61500-3	COVER	1							
3	1	172A69-61590	COVER, TRAVEL	2							
4	1	22157-120000	WASHER, 12	4							
5	1	26013-100202	BOLT, SPRING M10X 20	8							
6	1	26013-120302	BOLT, SPRING M12X 30	4							

N:Old $\xleftrightarrow[\text{No}]{\text{Yes}}$ New, Q:Old $\xleftrightarrow[\text{Yes}]{\text{No}}$ New, R:Old $\xleftrightarrow[\text{Yes}]{\text{Yes}}$ New, S:Old $\xleftrightarrow[\text{No}]{\text{No}}$ New, W:Add, Z:Discontinued, F:Interchangeable by set, K:Q'ty Change

Copyright (C) 2015 YANMAR CO., LTD. All RightsReserved.

Fig.58. FRAME GUARD(LEFT)

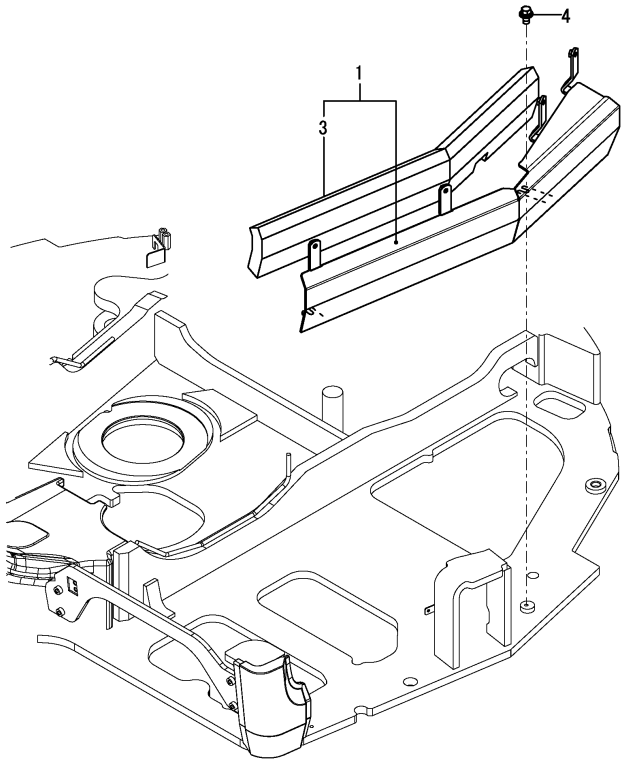

(A)=SV100-2A C(US) (D)=
(B)= (E)=
(C)= (F)=

No.	Lev.	Parts No.	Description	Q'ty (A)	(B)	(C)	(D)	(E)	(F)	I	R
1	1	172B12-61340	GUARD ASSY,FRAME L	1							1
3	2	172B12-61380	SPONGE,GUARD L	1							
3A	1	172472-03141	LABEL, SUPPORT	1							2
3B	1	172437-03352	LABEL, CYLINDER	1							2
4	1	26106-100202	BOLT, M10X 20 PLATED	2							

Remarks
(1)Attach the No.3A & 3B label to this part.
(2)Label is not illustrated.

N:Old $\xleftrightarrow[\text{No}]{\text{Yes}}$ New, Q:Old $\xleftrightarrow[\text{Yes}]{\text{No}}$ New, R:Old $\xleftrightarrow[\text{Yes}]{\text{Yes}}$ New, S:Old $\xleftrightarrow[\text{No}]{\text{No}}$ New, W:Add, Z:Discontinued, F:Interchangeable by set, K:Q'ty Change

Copyright (C) 2015 YANMAR CO., LTD. All RightsReserved.

Fig.59. FRAME GUARD(RIGHT)

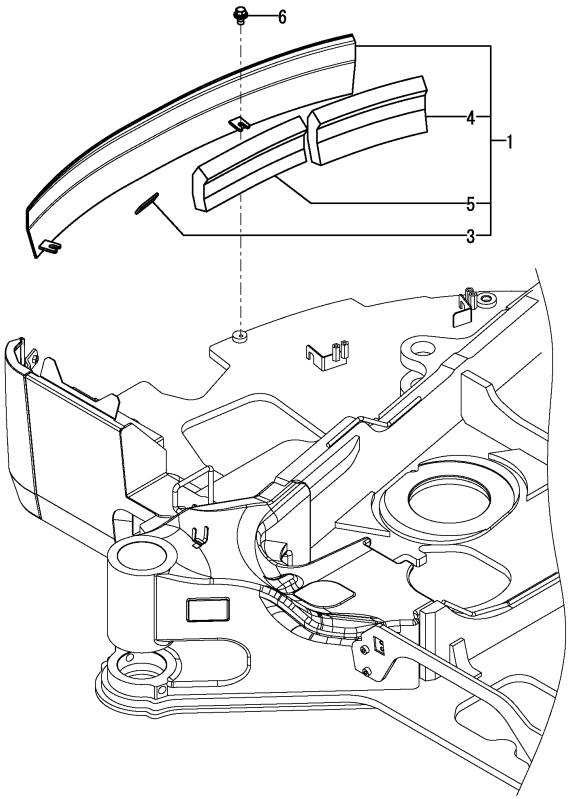

(A)=SV100-2A C(US)
(B)=
(C)=
(D)=
(E)=
(F)=

No.	Lev.	Parts No.	Description	Q'ty (A)	(B)	(C)	(D)	(E)	(F)	I	R
1	1	172B12-61440	GUARD ASSY,FRAME R	1							1
3	2	172A89-61470	RUBBER, PLATE	1							
4	2	172B12-61470	SPONGE,GUARD R A	1							
5	2	172B11-62020	SPONGE, GUARD R B	1							
5A	1	172437-03352	LABEL, CYLINDER	1							2
6	1	26106-100202	BOLT, M10X 20 PLATED	2							

Remarks
(1)Attach the No.5A label to this part.
(2)Label is not illustrated.

N:Old $\xleftarrow[\text{No}]{\text{Yes}}$ New, Q:Old $\xleftarrow[\text{Yes}]{\text{No}}$ New, R:Old $\xleftarrow[\text{Yes}]{\text{Yes}}$ New, S:Old $\xleftarrow[\text{No}]{\text{No}}$ New, W:Add, Z:Discontinued, F:Interchangeable by set, K:Q'ty Change

Copyright (C) 2015 YANMAR CO., LTD. All RightsReserved.

Fig.60. FLOOR MAT

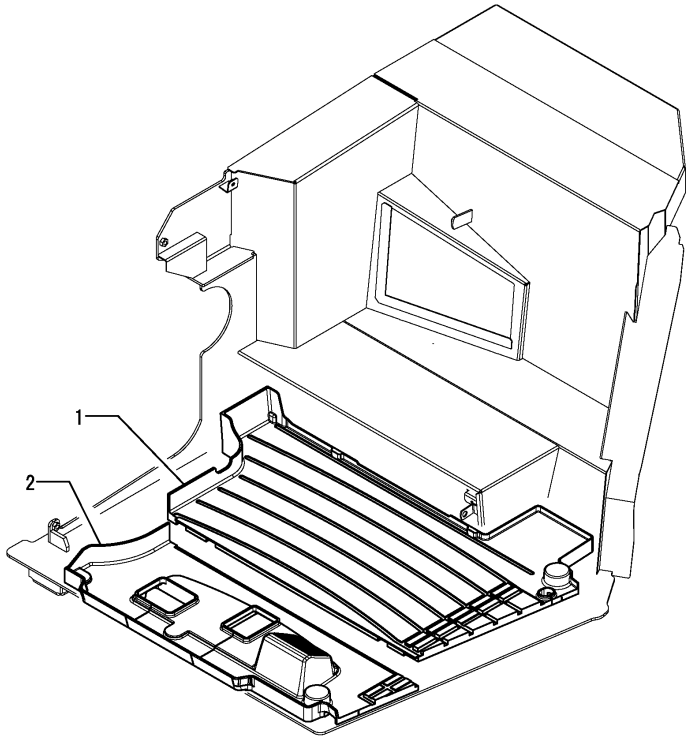

(A)=SV100-2A C(US)
(B)=
(C)=
(D)=
(E)=
(F)=

No.	Lev.	Parts No.	Description	Q'ty (A)	(B)	(C)	(D)	(E)	(F)	I	R
1	1	172A69-62150	FLOOR MAT A	1							
2	1	172A69-62160	MAT, FLOOR	1							

N:Old $\xleftarrow[\text{No}]{\text{Yes}}$ New, Q:Old $\xleftarrow[\text{Yes}]{\text{No}}$ New, R:Old $\xleftarrow[\text{Yes}]{\text{Yes}}$ New, S:Old $\xleftarrow[\text{No}]{\text{No}}$ New, W:Add, Z:Discontinued, F:Interchangeable by set, K:Q'ty Change

Copyright (C) 2015 YANMAR CO., LTD. All RightsReserved.

Fig.61. LEVER BOX

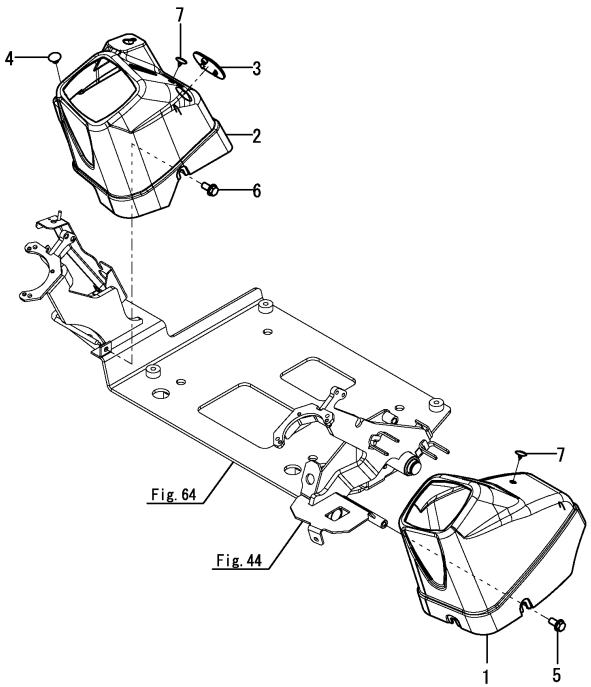

(A)=SV100-2A C(US) (D)=
(B)= (E)=
(C)= (F)=

No.	Lev.	Parts No.	Description	Q'ty (A)	(B)	(C)	(D)	(E)	(F)	I	R
1	1	172B11-63110	BOX, CONTROL L	1							1
1-1	1	172B11-63210	BOX, CONTROL L D	1						S	2
	(A=MAF001)										
2	1	172B11-63120	BOX, CONTROL R	1							1
2-1	1	172B11-63220	BOX, CONTROL R D	1						S	2
	(A=MAF001)										
3	1	172B11-63130	COVER, CONTROL R	1							1
3-1	1	172B11-63230	COVER, CONTROL R D	1						S	2
	(A=MAF001)										
4	1	172187-63160	CLIP	1							
5	1	172519-63240	BOLT	3							
6	1	172519-63240	BOLT	2							
7	1	172176-68210	CLIP, TREE	2							

Remarks
(1)Color = DARK OLIVE GRAY.
(2)Color = PANTONE 425C.

N:Old $\xleftrightarrow[\text{No}]{\text{Yes}}$ New, Q:Old $\xleftrightarrow[\text{Yes}]{\text{No}}$ New, R:Old $\xleftrightarrow[\text{Yes}]{\text{Yes}}$ New, S:Old $\xleftrightarrow[\text{No}]{\text{No}}$ New, W:Add, Z:Discontinued, F:Interchangeable by set, K:Q'ty Change

Copyright (C) 2015 YANMAR CO., LTD. All RightsReserved.

Fig.62. SIDE COVER

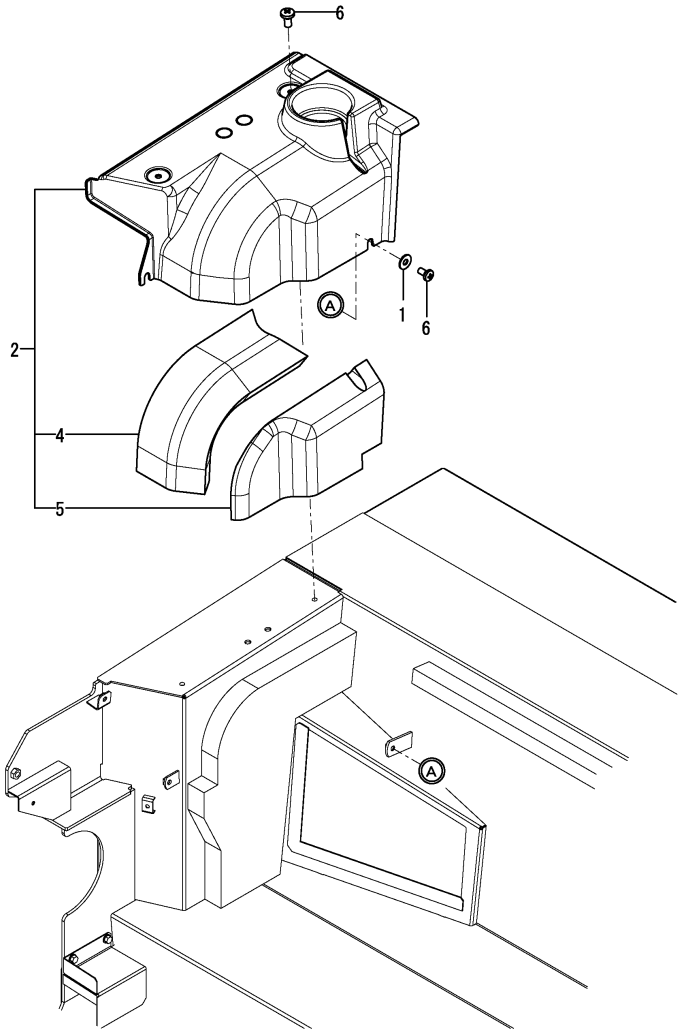

(A)=SV100-2A C(US) (D)=
(B)= (E)=
(C)= (F)=

No.	Lev.	Parts No.	Description	Q'ty (A)	(B)	(C)	(D)	(E)	(F)	I	R
1	1	172458-62430	WASHER	1							
2	1	172B12-63150	COVER ASSY,SIDE	1							1
2-1	1	172B12-63250	COVER ASSY,SIDE D	1						S	2
	(A=MAF001)										
4	2	172B12-63170	SPONGE,SIDE COVER A	1							
5	2	172B12-63180	SPONGE,SIDE COVER B	1							
6	1	172137-69850	SCREW	3							

Remarks
(1)Color = WARM IVORY.
(2)Color = PANTONE 425C.

N:Old $\xleftrightarrow[\text{No}]{\text{Yes}}$ New, Q:Old $\xleftrightarrow[\text{Yes}]{\text{No}}$ New, R:Old $\xleftrightarrow[\text{Yes}]{\text{Yes}}$ New, S:Old $\xleftrightarrow[\text{No}]{\text{No}}$ New, W:Add, Z:Discontinued, F:Interchangeable by set, K:Q'ty Change

Copyright (C) 2015 YANMAR CO., LTD. All RightsReserved.

Fig.63. SEAT MOUNT

(A)=SV100-2A C(US) (D)=
(B)= (E)=
(C)= (F)=

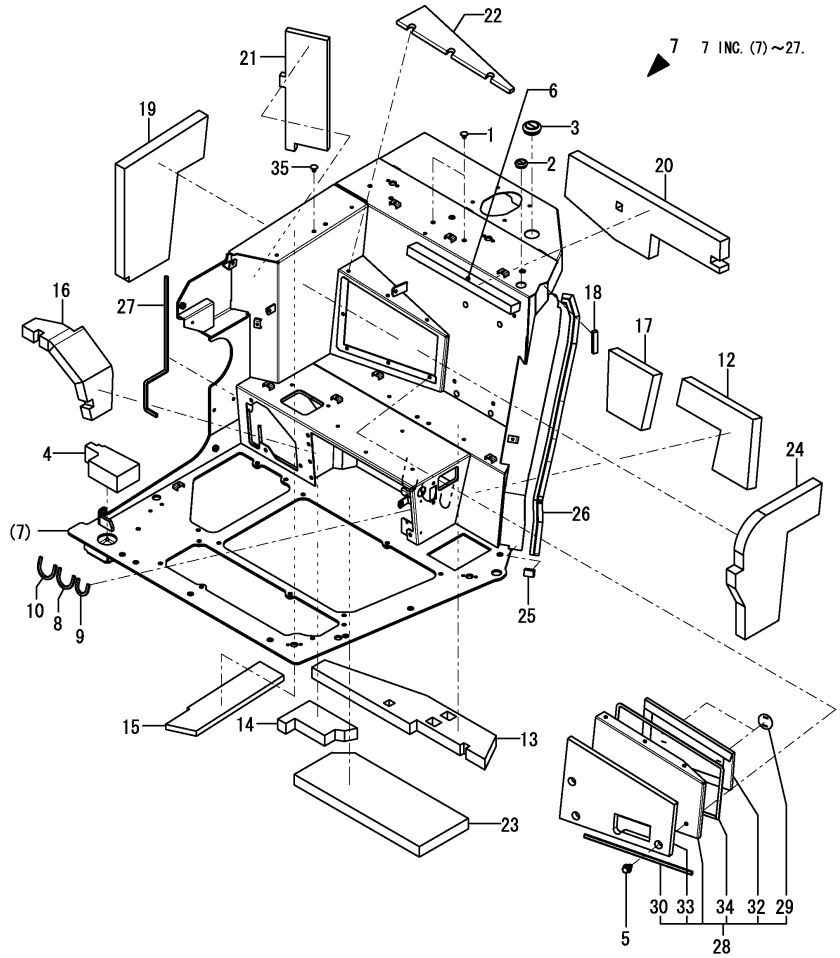

No.	Lev.	Parts No.	Description	Q'ty (A)	(B)	(C)	(D)	(E)	(F)	I	R
1	1	172122-17190	CLIP, TREE	2							
2	1	172B11-18880	GROMMET,30	1							
3	1	172141-50890	GROMMET	1							
4	1	172B11-62250	SPONGE,T60	1							
5	1	172519-63240	BOLT	7							
6	1	172B11-64170	CUSHION,SEAT	1							
7	1	172B12-64200	MOUNT ASSY, SEAT	1							
8	2	172444-17620	SEAL	1							
9	2	172458-18850	TRIM	1							
10	2	172538-19700	SEAL,135	1							
12	2	172B11-64610	SPONGE, SEAT MT	1							
13	2	172B12-64620	SPONGE,SEAT MT	1							
14	2	172B12-64630	SPONGE,SEAT MT	1							
15	2	172B12-64640	SPONGE,SEAT MT	1							
16	2	172B11-64670	SPONGE, SEAT MT	1							
17	2	172B11-64680	SPONGE, SEAT MT	1							
18	2	172A69-64710	SEAL, SEAT MOUNT	1							
19	2	172B12-64740	SPONGE, SEAT MT R	1							
20	2	172B12-64760	SPONGE,SEAT MT	1							
21	2	172B12-64770	SPONGE,SEAT MT	1							
22	2	172B12-64790	INSULATOR,DPF	1							
23	2	172B11-64820	SPONGE, SEAT MT	1							
24	2	172B12-64830	SPONGE,DPF	1							
25	2	172B11-64860	SEAL,SEAT MT	1							
26	2	172A69-65850	RUBBER, SEAL	1							
27	2	172187-66140	RUBBER 580	1							
28	1	172B12-64690	COVER ASSY, DPF	1							
29	2	172B11-18570	PLATE, INSURETOR	2							
30	2	172146-61360	RUBBER, SEAL	1							
32	2	172B12-64750	INSULATOR, DPF	1							
33	2	172B12-64810	SPONGE,DPF	1							
34	2	172B12-64820	SEAL, 1200	1							
35	1	172122-17190	CLIP, TREE	2							

Remarks
* DPF: DPF stands for DIESEL PARTICULATE FILTER.

N:Old $\xleftarrow[\text{No}]{\text{Yes}}$ New, Q:Old $\xleftarrow[\text{Yes}]{\text{No}}$ New, R:Old $\xleftarrow[\text{Yes}]{\text{Yes}}$ New, S:Old $\xleftarrow[\text{No}]{\text{No}}$ New, W:Add, Z:Discontinued, F:Interchangeable by set, K:Q'ty Change

Copyright (C) 2015 YANMAR CO., LTD. All RightsReserved.

Fig.64. SEAT SLIDE

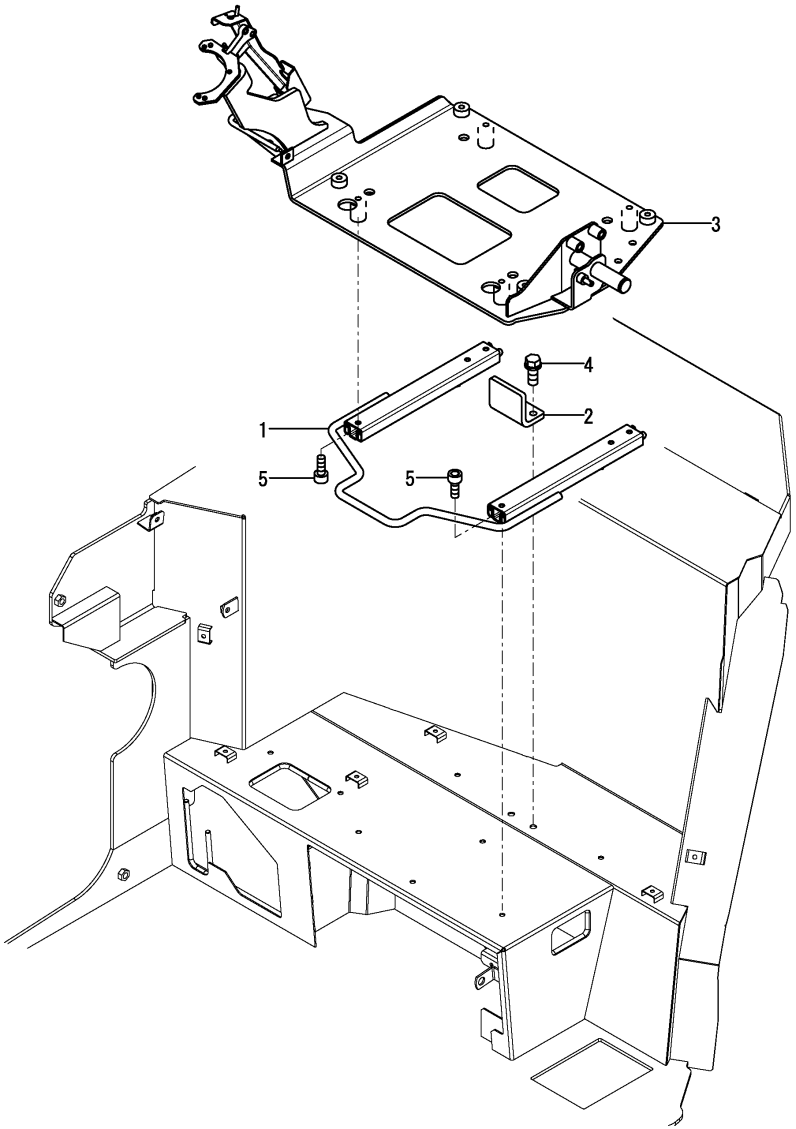

(A)=SV100-2A C(US)
(B)=
(C)=
(D)=
(E)=
(F)=

No.	Lev.	Parts No.	Description	Q'ty (A)	(B)	(C)	(D)	(E)	(F)	I	R
1	1	172A69-64100	SLIDE ASSY, SEAT	1							
2	1	172A69-64740	PLATE, STOPPER	1							
3	1	172B11-64950	FRAME ASSY, SLIDE	1							
4	1	26013-100252	BOLT, SPRING M10X 25	2							
5	1	26450-080162	BOLT, M8X 16	8							

N:Old $\xleftrightarrow[\text{No}]{\text{Yes}}$ New, Q:Old $\xleftrightarrow[\text{Yes}]{\text{No}}$ New, R:Old $\xleftrightarrow[\text{Yes}]{\text{Yes}}$ New, S:Old $\xleftrightarrow[\text{No}]{\text{No}}$ New, W:Add, Z:Discontinued, F:Interchangeable by set, K:Q'ty Change

Copyright (C) 2015 YANMAR CO., LTD. All RightsReserved.

Fig.65. SEAT

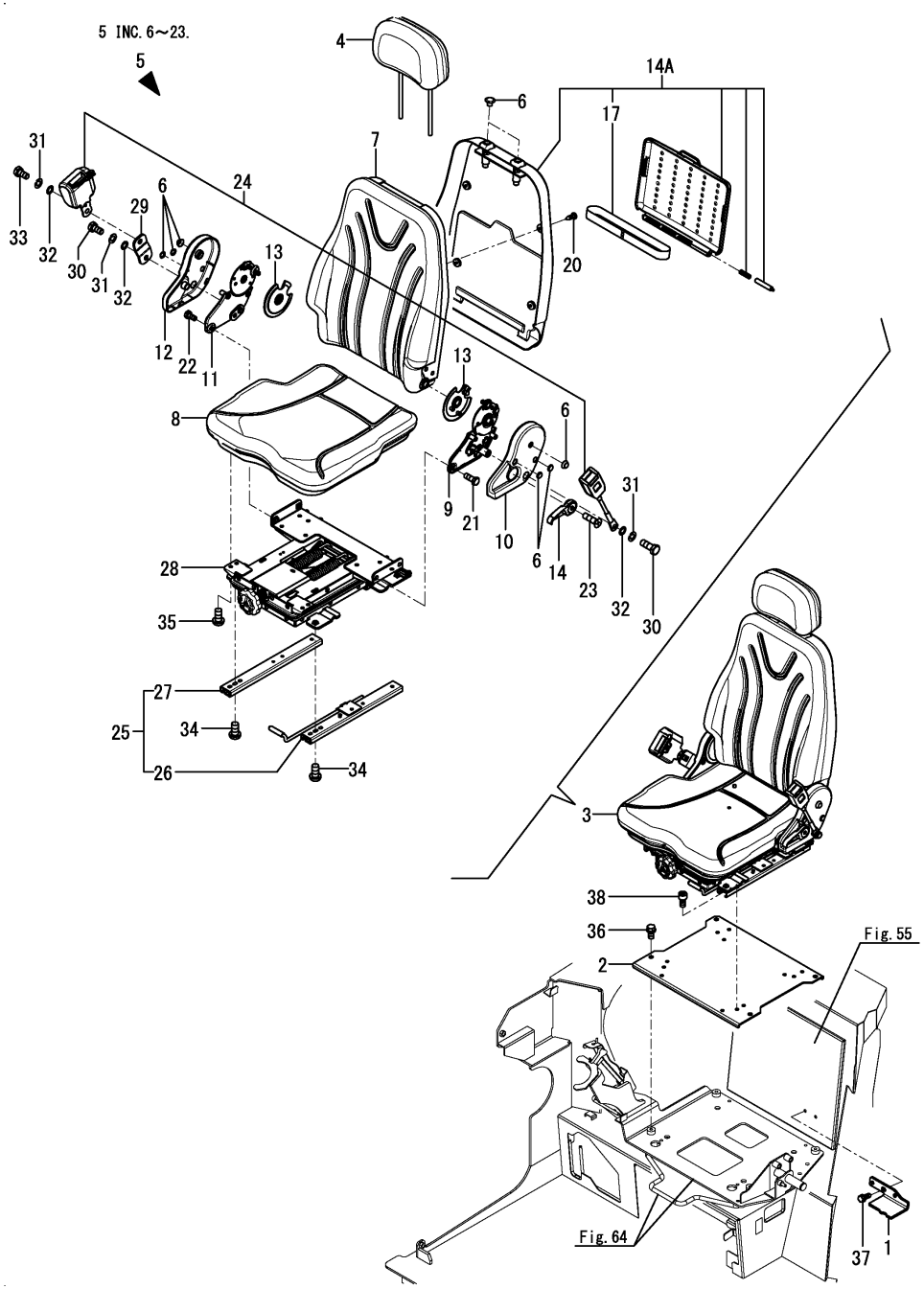

(A)=SV100-2A C(US) (D)=
(B)= (E)=
(C)= (F)=

No.	Lev.	Parts No.	Description	Q'ty (A)	(B)	(C)	(D)	(E)	(F)	I	R
1	1	172B11-61080	STOPPER,SEAT	1							
2	1	172A69-64120	PLATE ASSY	1							
3	1	172A69-64800	SEAT ASSY	1							
4	2	172A89-64720	HEADREST	1							
5	2	172A89-64730	SEAT ASSY, OPERATOR	1							
6	3	172A89-64760	CAP ASSY	1							
7	3	172A89-64770	SEAT, OPERATOR	1							
8	3	172A89-64780	SEAT, CUSHION	1							
9	3	172A89-64820	HINGE ASSY	1							
10	3	172A89-64830	COVER	1							
11	3	172A89-64840	HINGE ASSY	1							
12	3	172A89-64850	COVER	1							
13	3	172A89-64870	COVER	2							
14	3	172A89-64880	LEVER	1							
14A	3	172A89-64980	BOX ASSY,MANUAL	1							
17	4	172A89-64950	BAND	1							
20	3	22859-500160	SCREW, 5X16	4							
21	3	26106-100162	BOLT, M10X 16 PLATED	4							
22	3	26106-100162	BOLT, M10X 16 PLATED	4							
23	3	26559-050202	SCREW, M5X20	1							
24	2	172A89-64740	SEAT BELT ASSY	1							
25	2	172A89-64750	RAIL ASSY	1							
26	3	172A89-64800	RAIL ASSY, TL	1							
27	3	172A89-64810	RAIL ASSY, TR	1							
28	2	172A89-64790	SEAT, SPRING	1							
29	2	172A89-64860	BRACKET ASSY	1							
30	2	172A89-64890	BOLT	2							
31	2	172A89-64900	SPRING	3							
32	2	172A89-64910	WASHER	3							
33	2	172A89-64920	BOLT	1							
34	2	26106-080162	BOLT, M8X 16 PLATED	4							
35	2	26106-080162	BOLT, M8X 16 PLATED	4							
36	1	26013-100162	BOLT, SPRING M10X 16	4							
37	1	26014-080162	BOLT, M8X 16	2							
38	1	26450-080162	BOLT, M8X 16	4							

N:Old $\frac{\text{Yes}}{\text{No}}$ New, Q:Old $\frac{\text{No}}{\text{Yes}}$ New, R:Old $\frac{\text{Yes}}{\text{Yes}}$ New, S:Old $\frac{\text{No}}{\text{No}}$ New, W:Add, Z:Discontinued, F:Interchangeable by set, K:Q'ty Change

Copyright (C) 2015 YANMAR CO., LTD. All RightsReserved.

Fig.66. BONNET(FRONT)

(A)=SV100-2A C(US)
(B)=
(C)=
(D)=
(E)=
(F)=

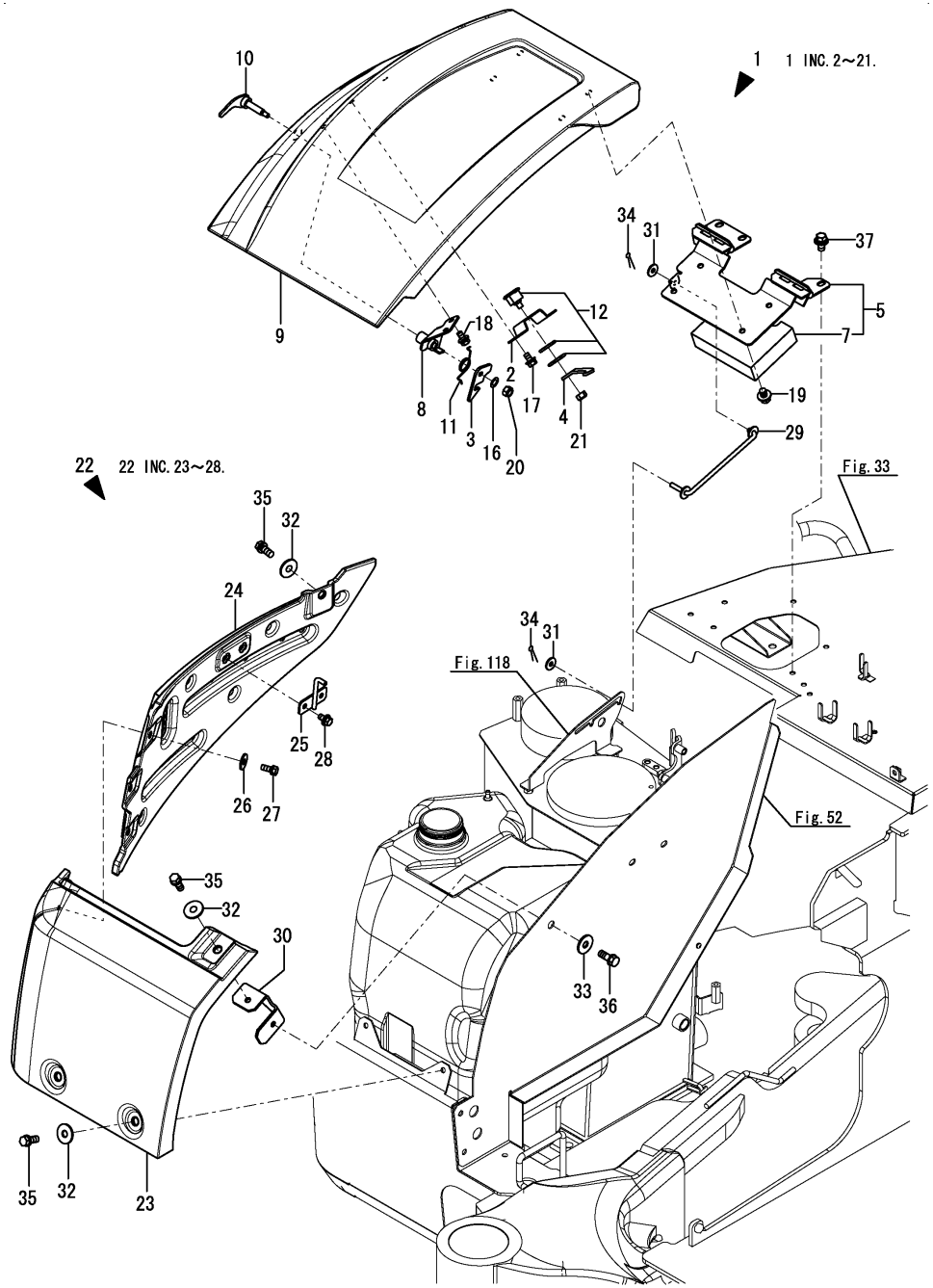

No.	Lev.	Parts No.	Description	Q'ty (A)	(B)	(C)	(D)	(E)	(F)	I	R
1	1	172B11-62410	BONNET ASSY,U BLACK	1							
2	2	172B03-61960	LOCK,PLATE	1							
3	2	172A69-62280	PLATE, LOCK	1							
4	2	172B11-62290	STAY, KEY	1							
5	2	172B11-62300	PLATE ASSY,HINGE	1							
7	3	172B11-62900	SPONGE,BONNET B	1							
8	2	172A69-62310	HOOK ASSY	1							
9	2	172A69-62420	BONNET	1							
10	2	172A69-62510	LEVER ASSY	1							
11	2	172156-65690	SPRING, STOPPER	1							
12	2	172B03-66170	CYLINDER ASSY, KEY	1							
16	2	22137-080000	WASHER, 8	1							
17	2	26014-080162	BOLT, M8X 16	2							
18	2	26014-080162	BOLT, M8X 16	2							
19	2	26014-100162	BOLT, M10X 16	4							
20	2	26347-080002	NUT, M8	1							
21	2	26347-100002	NUT, M10	1							
22	1	172A69-62430	BONNET ASSY	1							
23	2	172A69-62440	BONNET	1							
24	2	172A69-62450	BONNET	1							
25	2	172A69-62470	BAR ASSY, CATCH	1							
26	2	22157-080000	WASHER, 8	3							
27	2	26013-080202	BOLT, SPRING M8X 20	3							
28	2	26014-080162	BOLT, M8X 16	2							
29	1	172A69-62650	ROD ASSY, STOPPER	1							
30	1	172A69-65530	STAY ASSY, BONNET	1							
31	1	22157-080000	WASHER, 8	2							
32	1	22157-100000	WASHER, 10	4							
33	1	22157-100000	WASHER, 10	1							
34	1	22417-200200	PIN, COTTER 2.0X20	2							
35	1	26013-100252	BOLT, SPRING M10X 25	4							
36	1	26013-100252	BOLT, SPRING M10X 25	1							
37	1	26014-100202	BOLT, M10X 20	3							

N:Old $\overset{\text{Yes}}{\underset{\text{No}}{\leftrightarrow}}$ New, Q:Old $\overset{\text{No}}{\underset{\text{Yes}}{\leftrightarrow}}$ New, R:Old $\overset{\text{Yes}}{\underset{\text{Yes}}{\leftrightarrow}}$ New, S:Old $\overset{\text{No}}{\underset{\text{No}}{\leftrightarrow}}$ New, W:Add, Z:Discontinued, F:Interchangeable by set, K:Q'ty Change

Copyright (C) 2015 YANMAR CO., LTD. All RightsReserved.

Fig.67. BONNET(REAR)

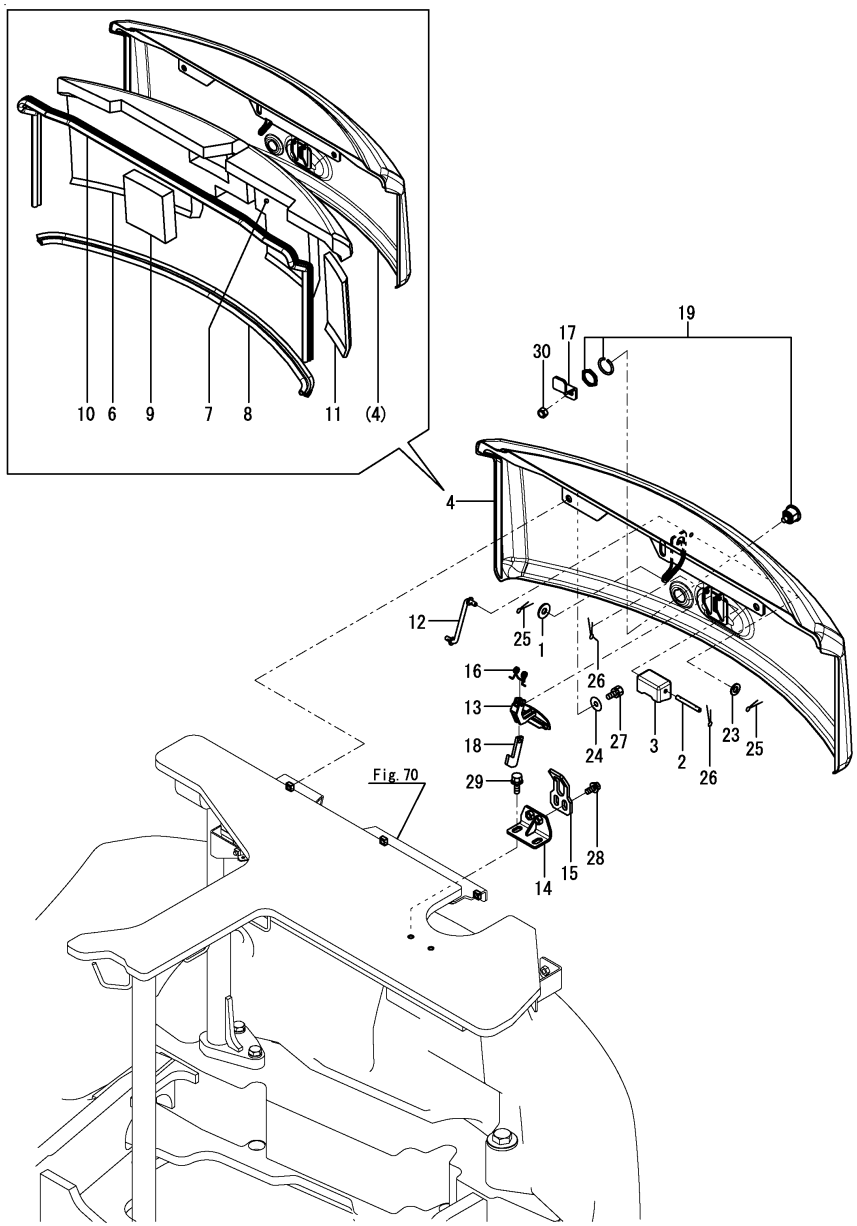

(A)=SV100-2A C(US) (D)=
(B)= (E)=
(C)= (F)=

No.	Lev.	Parts No.	Description	Q'ty (A)	(B)	(C)	(D)	(E)	(F)	I	R
1	1	1A1380-62160	WASHER, BELT COVER	1							
2	1	172458-65050	SHAFT	1							
3	1	172458-65060	COVER, LOCK	1							
4	1	172B12-65120	BONNET ASSY,A	1							1
6	2	172B12-65160	SPONGE,BONNET A R	1							
7	2	172B12-65170	SPONGE,BONNET A L	1							
8	2	172A69-65180	RUBBER, SEAL	1							
9	2	172B12-65180	SPONGE,BONNET A	1							
10	2	172A69-65190	RUBBER, SEAL	1							
11	2	172B12-65190	SPONGE,BONNET A	1							
11A	1	172437-03381	LABEL, SWING AREA	1							2
11B	1	172B03-03390	LABEL,SILENCER EX	1							2
11C	1	172437-03402	LABEL, ENGINE COVER	1							2
11D	1	172A36-03411	LABEL, ENGINE ROOM	1							2
11E	1	172125-03951	LABEL, AIR CLEANER	1							2
12	1	172444-65190	ROD ASSY, STOPPER	1							
13	1	172187-65210	LEVER ASSY, LOCK	1							
14	1	172B11-65220	BRACKET ASSY, LOCK	1							
15	1	172187-65270	PLATE, CATCH	1							
16	1	172734-65270	SPRING, CATCH	1							
17	1	172B11-65270	PLATE, LOCK	1							
18	1	172124-65480	CATCHER	1							
19	1	172B03-66170	CYLINDER ASSY, KEY	1							
23	1	22137-080000	WASHER, 8	1							
24	1	22157-100000	WASHER, 10	3							
25	1	22417-200200	PIN, COTTER 2.0X20	2							
26	1	22417-200200	PIN, COTTER 2.0X20	2							
27	1	26013-100252	BOLT, SPRING M10X 25	3							
28	1	26014-100252	BOLT, M10X 25	2							
29	1	26014-100252	BOLT, M10X 25	2							
30	1	26347-100002	NUT, M10	1							

Remarks
(1)Attach the No.11A, 11B, 11C, 11D & 11E label to this part.
(2)Label is not illustrated.

N:Old $\xleftarrow[\text{No}]{\text{Yes}}$ New, Q:Old $\xleftarrow[\text{Yes}]{\text{No}}$ New, R:Old $\xleftarrow[\text{Yes}]{\text{Yes}}$ New, S:Old $\xleftarrow[\text{No}]{\text{No}}$ New, W:Add, Z:Discontinued, F:Interchangeable by set, K:Q'ty Change

Copyright (C) 2015 YANMAR CO., LTD. All RightsReserved.

Fig.68. BONNET(LEFT)

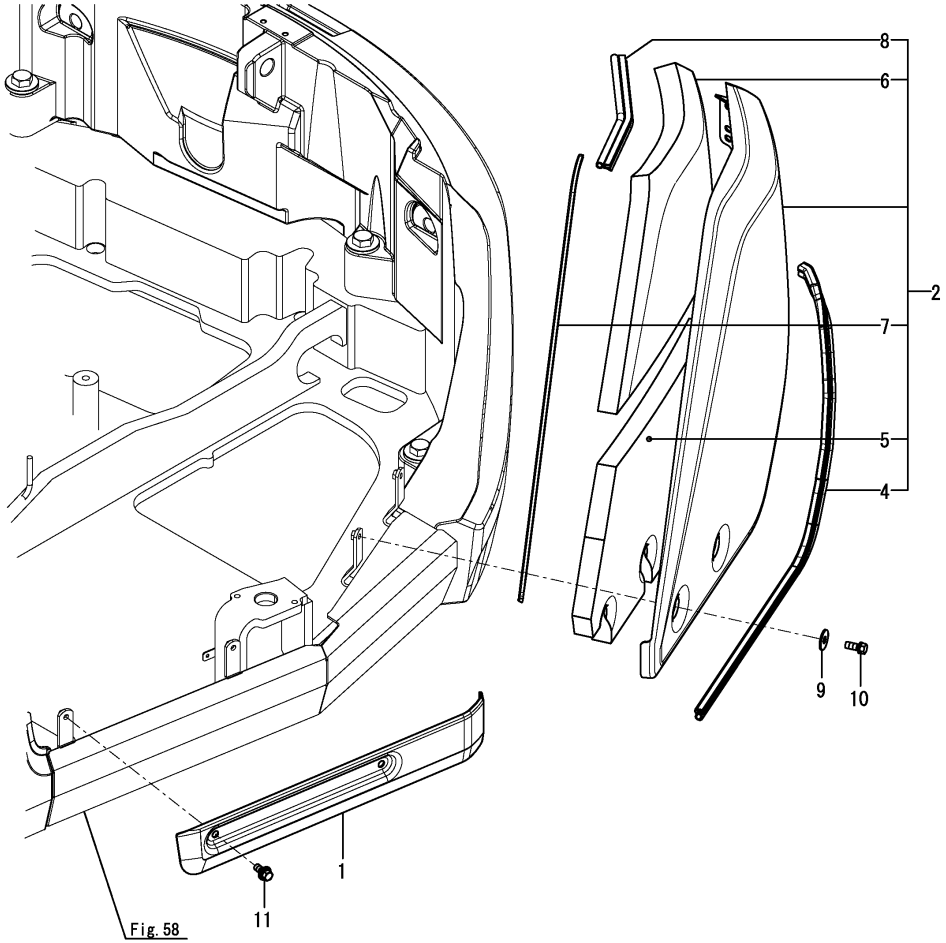

(A)=SV100-2A C(US) (D)=
(B)= (E)=
(C)= (F)=

No.	Lev.	Parts No.	Description	Q'ty (A)	(B)	(C)	(D)	(E)	(F)	I	R
1	1	172B11-61490	COVER,L FRAME	1							
2	1	172B12-65600	BONNET ASSY, L	1							
4	2	172A69-65640	RUBBER, SEAL	1							
5	2	172B12-65641	SPONGE, BONNET LA	1							
6	2	172B12-65650	SPONGE, BONNET LB	1							
7	2	172A69-65670	TRIM	1							
8	2	172164-66640	RUBBER, SEAL	1							
9	1	22157-100000	WASHER, 10	4							
10	1	26013-100252	BOLT, SPRING M10X 25	4							
11	1	26014-100252	BOLT, M10X 25	2							

N:Old $\xleftarrow[\text{No}]{\text{Yes}}$ New, Q:Old $\xleftarrow[\text{Yes}]{\text{No}}$ New, R:Old $\xleftarrow[\text{Yes}]{\text{Yes}}$ New, S:Old $\xleftarrow[\text{No}]{\text{No}}$ New, W:Add, Z:Discontinued, F:Interchangeable by set, K:Q'ty Change

Copyright (C) 2015 YANMAR CO., LTD. All RightsReserved.

Fig.69. BONNET(RIGHT)

(A)=SV100-2A C(US)
(B)=
(C)=
(D)=
(E)=
(F)=

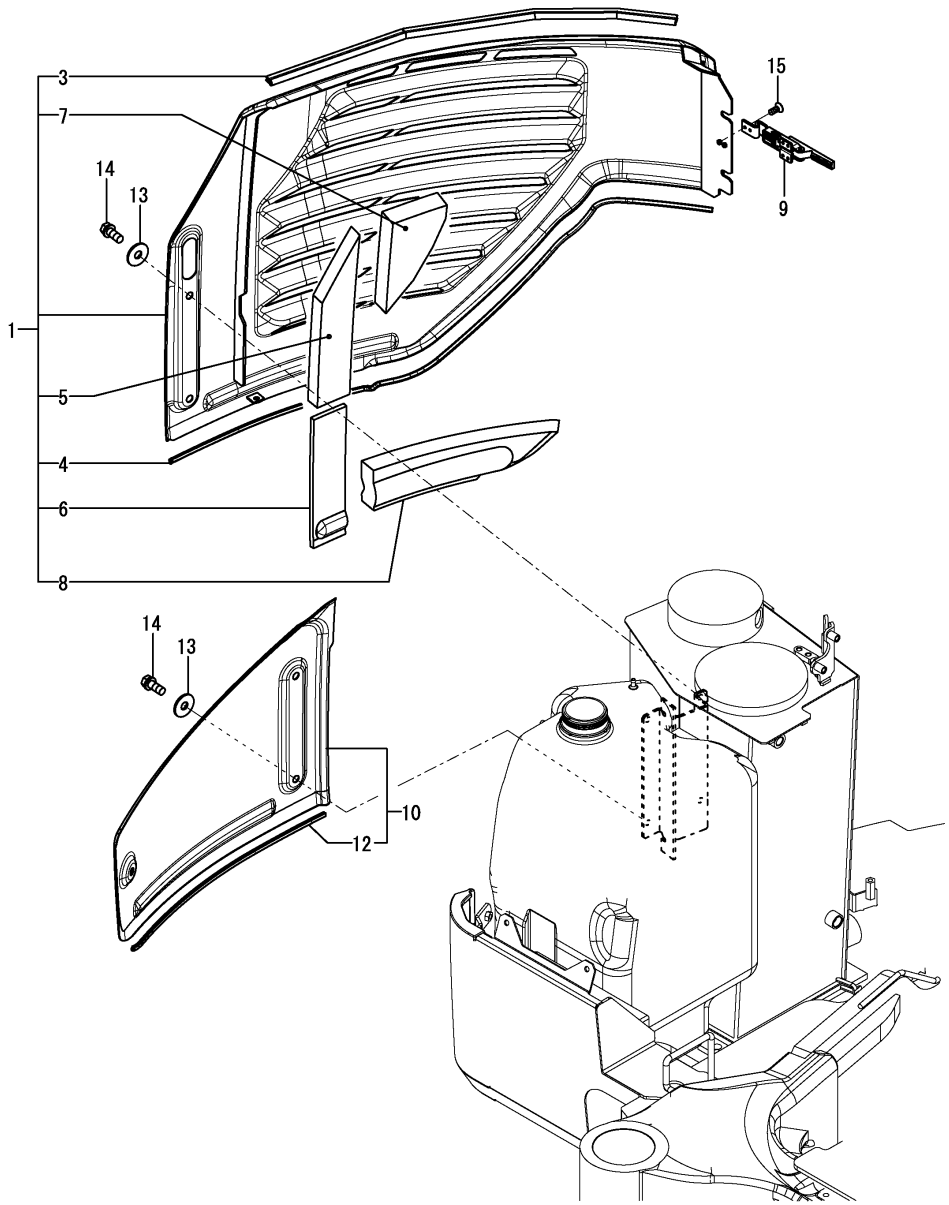

No.	Lev.	Parts No.	Description	Q'ty (A)	(B)	(C)	(D)	(E)	(F)	I	R
1	1	172B12-65800	BONNET ASSY,R	1							
3	2	172A69-65850	RUBBER, SEAL	1							
4	2	172A69-65860	TRIM	1							
5	2	172B12-65910	SPONGE,BONNET R A	1							
6	2	172B12-65920	SPONGE,BONNET R B	1							
7	2	172B12-65930	SPONGE,BONNET R C	1							
8	2	172B12-65940	SPONGE,BONNET R D	1							
9	1	172A69-65872	HANDLE, BONNET LOCK	1							
10	1	172A69-65900-Y	BONNET ASSY	1							
12	2	172A69-65920	TRIM	1							
13	1	22157-100000	WASHER, 10	5							
14	1	26013-100252	BOLT, SPRING M10X 25	5							
15	1	26577-050122	SCREW, M5X12	6							

N:Old $\xleftarrow[\text{No}]{\text{Yes}}$ New, Q:Old $\xleftarrow[\text{Yes}]{\text{No}}$ New, R:Old $\xleftarrow[\text{Yes}]{\text{Yes}}$ New, S:Old $\xleftarrow[\text{No}]{\text{No}}$ New, W:Add, Z:Discontinued, F:Interchangeable by set, K:Q'ty Change

Copyright (C) 2015 YANMAR CO., LTD. All RightsReserved.

Fig.70. CABIN MOUNT(BRACKET)

(A)=SV100-2A C(US)
(B)=
(C)=
(D)=
(E)=
(F)=

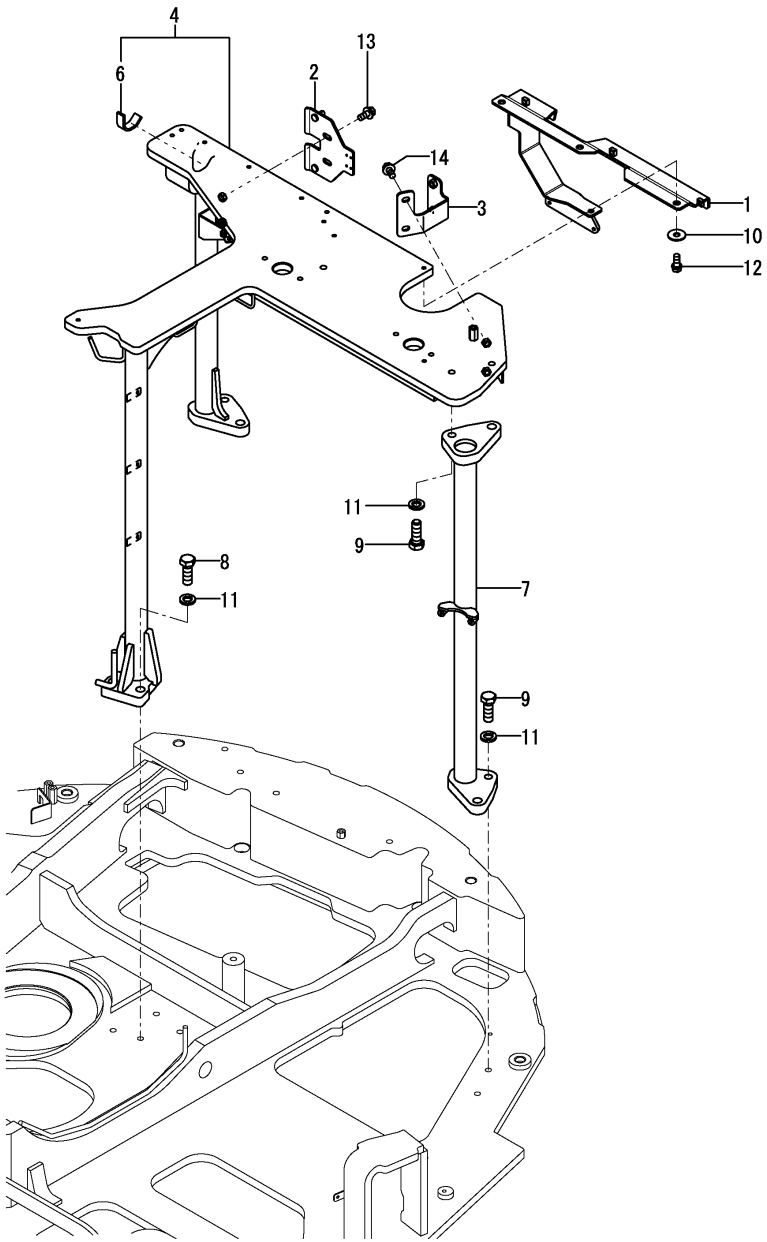

No.	Lev.	Parts No.	Description	Q'ty (A)	(B)	(C)	(D)	(E)	(F)	I	R
1	1	172B12-65210	BRACKET ASSY,BON A	1							
2	1	172B12-65950	BRACKET ASSY,BR	1							
3	1	172A69-65971	STAY ASSY,BONNET L	1							
4	1	172B12-66500	BRACKET ASSY, CAB M	1							
6	2	172A89-67450	SEAL, SPONGE	1							
7	1	172B12-66800	FULCRUM ASSY,L	1							
8	1	172460-73320	BOLT	4							
9	1	172460-73320	BOLT	4							
10	1	22157-100000	WASHER, 10	3							
11	1	22217-160000	WASHER, SPRING 16	8							
12	1	26013-100252	BOLT, SPRING M10X 25	3							
13	1	26014-100252	BOLT, M10X 25	2							
14	1	26014-100252	BOLT, M10X 25	2							

N:Old $\xleftrightarrow[\text{No}]{\text{Yes}}$ New, Q:Old $\xleftrightarrow[\text{Yes}]{\text{No}}$ New, R:Old $\xleftrightarrow[\text{Yes}]{\text{Yes}}$ New, S:Old $\xleftrightarrow[\text{No}]{\text{No}}$ New, W:Add, Z:Discontinued, F:Interchangeable by set, K:Q'ty Change

Copyright (C) 2015 YANMAR CO., LTD. All RightsReserved.

Fig.71. CABIN MOUNT(ANTIVIBRATION MOUNT)

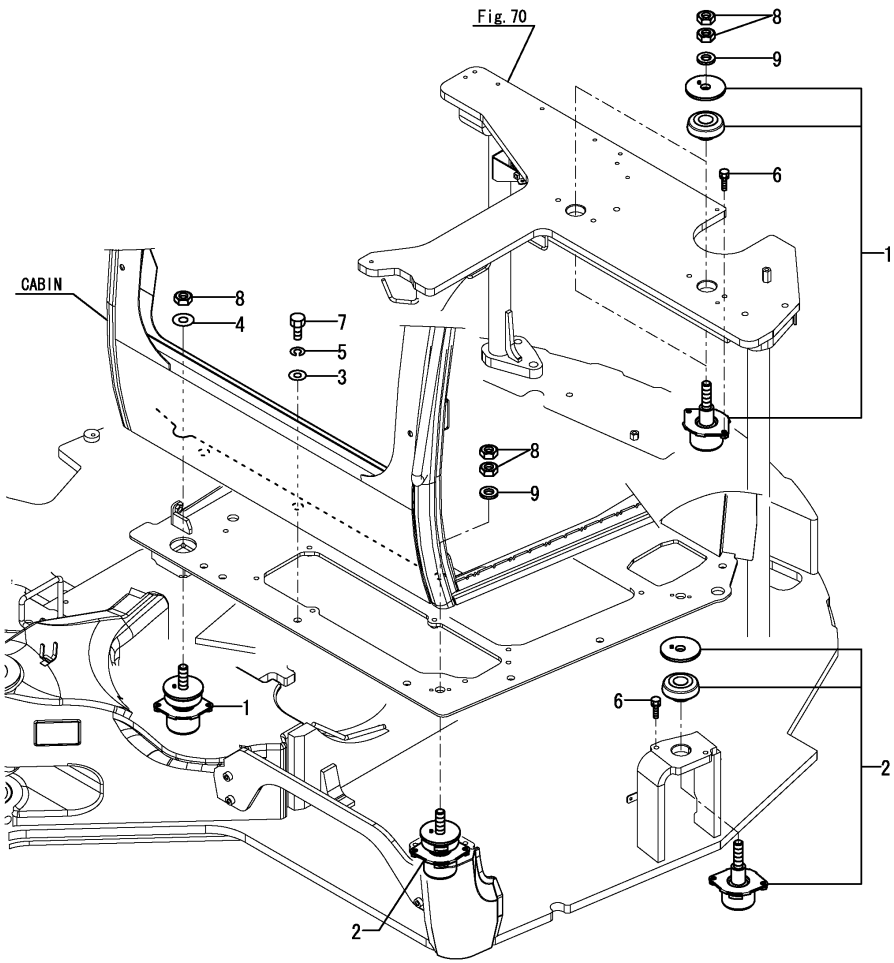

(A)=SV100-2A C(US)
(B)=
(C)=
(D)=
(E)=
(F)=

No.	Lev.	Parts No.	Description	Q'ty (A)	(B)	(C)	(D)	(E)	(F)	I	R
1	1	172A69-64160	MOUNT ASSY, 60HS	3							
2	1	172A69-64170	MOUNT ASSY, 70HS	2							
3	1	22137-160000	WASHER, 16	6							
4	1	22137-200000	WASHER, 20	1							
5	1	22217-160000	WASHER, SPRING 16	6							
6	1	26013-100352	BOLT, SPRING M10X 35	10							
7	1	26076-160402	BOLT, 10.916X 40	6							
8	1	26716-200002	NUT, M20	9							
9	1	933172-14120	WASHER	4							

N:Old $\xleftrightarrow[\text{No}]{\text{Yes}}$ New, Q:Old $\xleftrightarrow[\text{Yes}]{\text{No}}$ New, R:Old $\xleftrightarrow[\text{Yes}]{\text{Yes}}$ New, S:Old $\xleftrightarrow[\text{No}]{\text{No}}$ New, W:Add, Z:Discontinued, F:Interchangeable by set, K:Q'ty Change

Copyright (C) 2015 YANMAR CO., LTD. All RightsReserved.

Fig.72. CABIN(ASSEMBLY)

(A)=SV100-2A C(US)
(B)=
(C)=
(D)=
(E)=
(F)=

CABIN ASSY
Fig.72 Ref.No.1
INC. Fig.73～82.

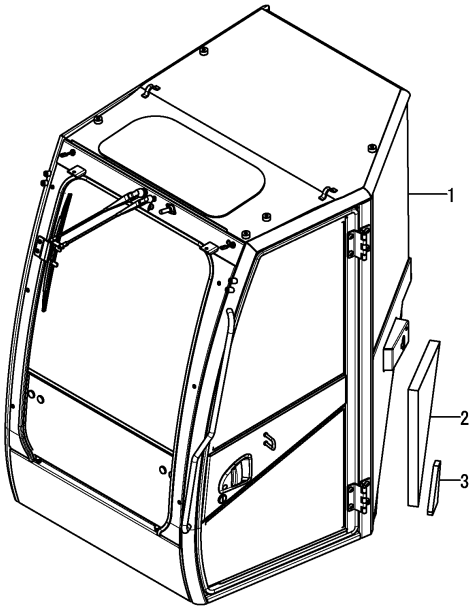

No.	Lev.	Parts No.	Description	Q'ty (A)	(B)	(C)	(D)	(E)	(F)	I	R
1	1	172B11-68000	CABIN ASSY	1							1
2	1	172B11-68910	SPONGE,CAB A	1							
3	1	172B11-68920	SPONGE,CAB B	1							
4A	1	172437-03302	LABEL, MANUAL	1							2
4B	1	172437-03441	LABEL, ROPS	1							2
4C	1	172437-03451	LABEL, SEAT BELT	1							2
4D	1	172437-03471	LABEL, LEVER LOCK	1							2

Remarks
(1)Attach the No.4A, 4B, 4C & 4D label to this part.
(2)Label is not illustrated.

N:Old $\xleftrightarrow[\text{No}]{\text{Yes}}$ New, Q:Old $\xleftrightarrow[\text{Yes}]{\text{No}}$ New, R:Old $\xleftrightarrow[\text{Yes}]{\text{Yes}}$ New, S:Old $\xleftrightarrow[\text{No}]{\text{No}}$ New, W:Add, Z:Discontinued, F:Interchangeable by set, K:Q'ty Change

Copyright (C) 2015 YANMAR CO., LTD. All RightsReserved.

Fig.73. CABIN(ACCESSORY)(1)

(A)=SV100-2A C(US) (D)=
(B)= (E)=
(C)= (F)=

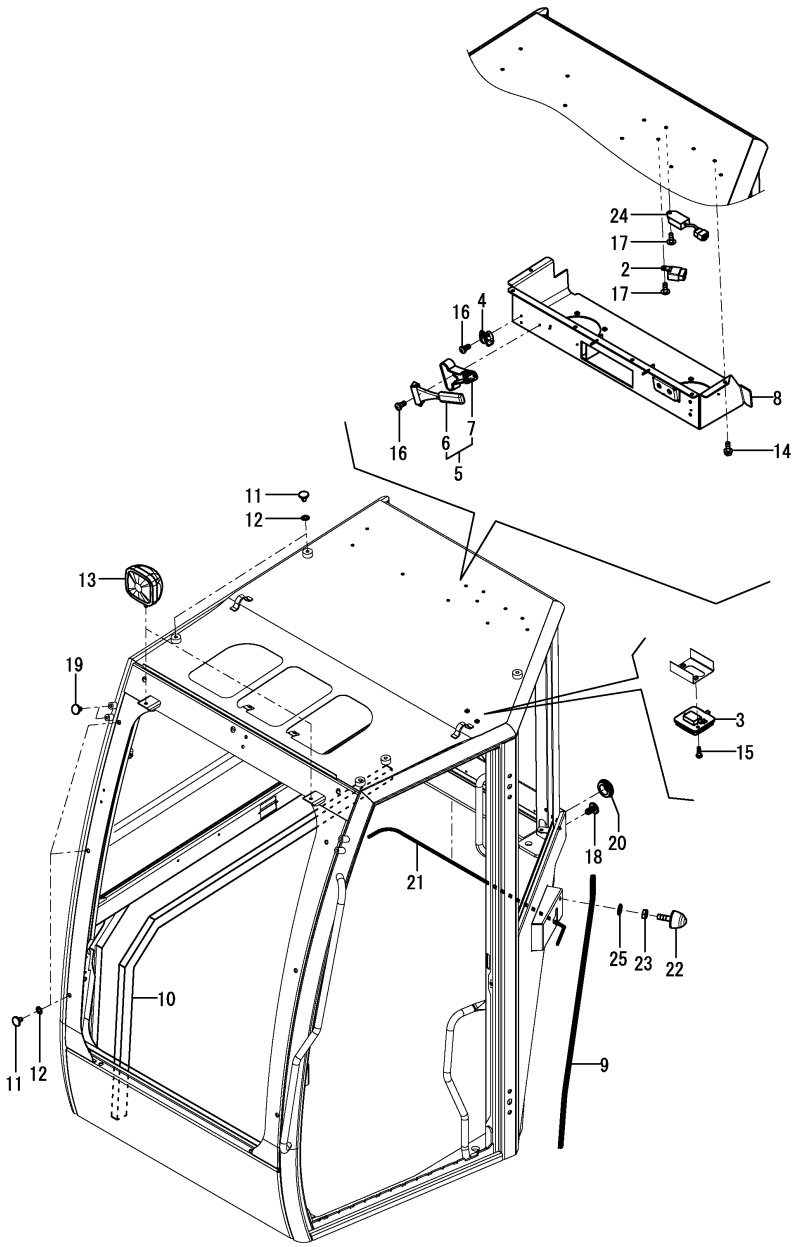

No.	Lev.	Parts No.	Description	Q'ty (A)	(B)	(C)	(D)	(E)	(F)	I	R
2	3	172B02-17150	RELAY,CA C TYPE	1							
3	3	172B06-68040	LAMP,ROOM	1							
4	3	172B06-68070	HOOK, COAT	1							
5	3	172B06-68101	HAMMER,EMERGENCY	1							
6	4	172B06-68110	HAMMER	1							
7	4	172B06-68120	HOLDER, HAMMER	1							
8	3	172B11-68240	COVER ASSY,HEADER	1							
9	3	172B11-68270	SEAL,865	1							
10	3	172B11-68290	SEAL,1780	1							
11	3	172B11-68310	PLUG,HOLE	11							
11-1	3 (A=M20905)	172B11-68310	PLUG,HOLE	10						K	
12	3	172B11-68320	RUBBER,PACKING	11							
12-1	3 (A=M20905)	172B11-68320	RUBBER,PACKING	10						K	
13	3	172B06-68350	LAMP, WORK	2							
14	3	172B06-68360	BOLT, M6X16	6							
15	3	172B06-68370	BOLT, M5X16	2							
16	3	172B06-68380	BOLT, M4X12	4							
17	3	172B11-68800	SCREW,M6X16	2							
18	3	172B11-69030	CAP,BOLT M8	2							
19	3	172B11-69040	CAP,BOLT M10	4							
20	3	172B11-69060	GROMMET,22	1							
21	3	172B11-69080	SEAL,DAM 935	1							
22	3	172463-69270	STOPPER,DOOR	1							
23	3	172455-69560	NUT	1							
24	3	128300-77920	TIMER	1							
25	3	22217-100000	WASHER, SPRING 10	1							

Remarks
* Cabin assy is shown in Fig.72.

N:Old $\frac{\text{Yes}}{\text{No}}$ New, Q:Old $\frac{\text{No}}{\text{Yes}}$ New, R:Old $\frac{\text{Yes}}{\text{Yes}}$ New, S:Old $\frac{\text{No}}{\text{No}}$ New, W:Add, Z:Discontinued, F:Interchangeable by set, K:Q'ty Change

Copyright (C) 2015 YANMAR CO., LTD. All RightsReserved.

Fig.74. CABIN(ACCESSORY)(2)

(A)=SV100-2A C(US)
(B)=
(C)=
(D)=
(E)=
(F)=

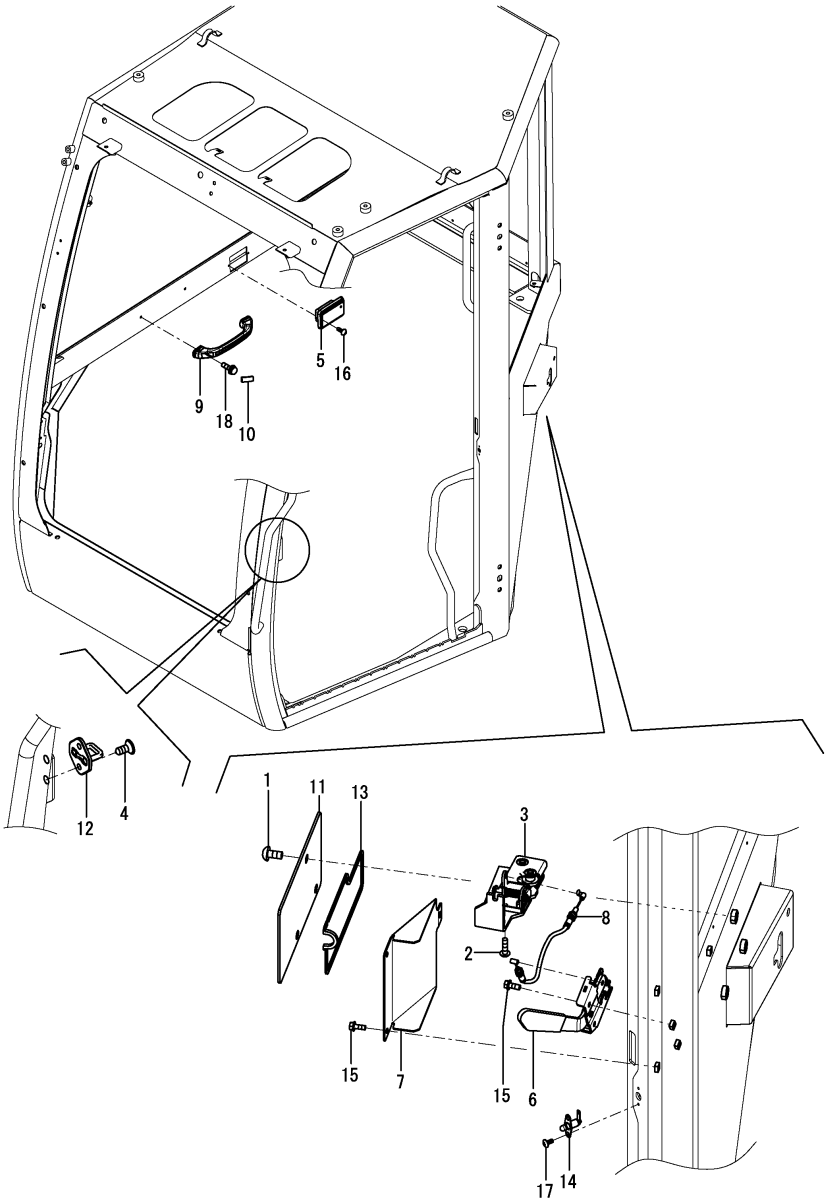

No.	Lev.	Parts No.	Description	Q'ty (A)	(B)	(C)	(D)	(E)	(F)	I	R
1	3	172458-63730	SCREW	3							
2	3	172455-67350	SCREW	4							
3	3	172B06-68060	LATCH ASSY	1							
4	3	172B06-68130	SCREW,TORX M8X20	2							
5	3	172B06-68150	TRAY,ASH	1							
6	3	172B11-68160	LEVER ASSY,LOW	1							
7	3	172B11-68170	COVER,DOOR LEVER	1							
8	3	172B11-68180	CABLE ASSY,DOOR	1							
9	3	172B11-68190	GRIP,R	1							1
9-1	3	172B11-68210	GRIP,R D	1						S	2
	(A=MAF001)										
10	3	172B11-68200	CAP,GRIP R	2							1
10-1	3	172B11-68220	CAP,GRIP R D	2						S	2
	(A=MAF001)										
11	3	172B11-68250	BRACKET ASSY,CATCH	1							
12	3	172B06-68260	STRIKER, DOOR	1							
13	3	172B11-68300	SEAL,770	1							
14	3	172B06-68340	SWITCH,DOOR	1							
15	3	172B06-68360	BOLT, M6X16	5							
16	3	172B06-68380	BOLT, M4X12	2							
17	3	172B06-68400	SCREW, TAPPING M4X12	2							
18	3	172B11-68810	SCREW,M6X20	2							

Remarks
* Cabin assy is shown in Fig.72.
(1)Color = GRAY.
(2)Color = BLACK.

N:Old $\xleftrightarrow[\text{No}]{\text{Yes}}$ New, Q:Old $\xleftrightarrow[\text{Yes}]{\text{No}}$ New, R:Old $\xleftrightarrow[\text{Yes}]{\text{Yes}}$ New, S:Old $\xleftrightarrow[\text{No}]{\text{No}}$ New, W:Add, Z:Discontinued, F:Interchangeable by set, K:Q'ty Change

Copyright (C) 2015 YANMAR CO., LTD. All RightsReserved.

Fig.75. CABIN(ACCESSORY)(3)

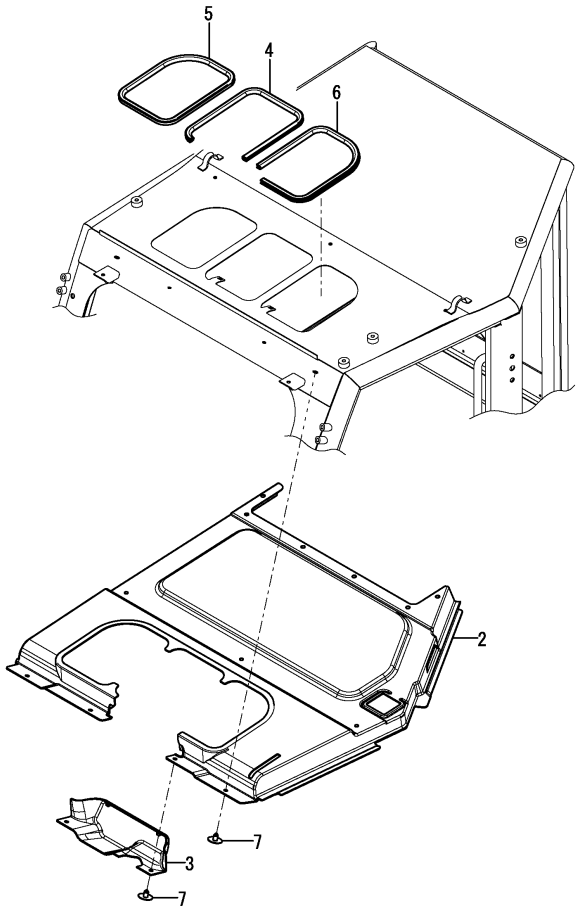

(A)=SV100-2A C(US) (D)=
(B)= (E)=
(C)= (F)=

No.	Lev.	Parts No.	Description	Q'ty (A)	(B)	(C)	(D)	(E)	(F)	I	R
2	3	172B11-68410	PAD,ROOF	1							
3	3	172B11-68420	COVER,HEADER FT	1							
4	3	172B11-68430	SEAL,673	1							
5	3	172B11-68440	SEAL,783	1							
6	3	172B11-68450	SEAL,815	1							
7	3	172B11-68460	RIVET,7	7							

Remarks
* Cabin assy is shown in Fig.72.

N:Old $\xleftrightarrow[\text{No}]{\text{Yes}}$ New, Q:Old $\xleftrightarrow[\text{Yes}]{\text{No}}$ New, R:Old $\xleftrightarrow[\text{Yes}]{\text{Yes}}$ New, S:Old $\xleftrightarrow[\text{No}]{\text{No}}$ New, W:Add, Z:Discontinued, F:Interchangeable by set, K:Q'ty Change

Copyright (C) 2015 YANMAR CO., LTD. All RightsReserved.

Fig.76. CABIN(ELECTRIC PARTS)

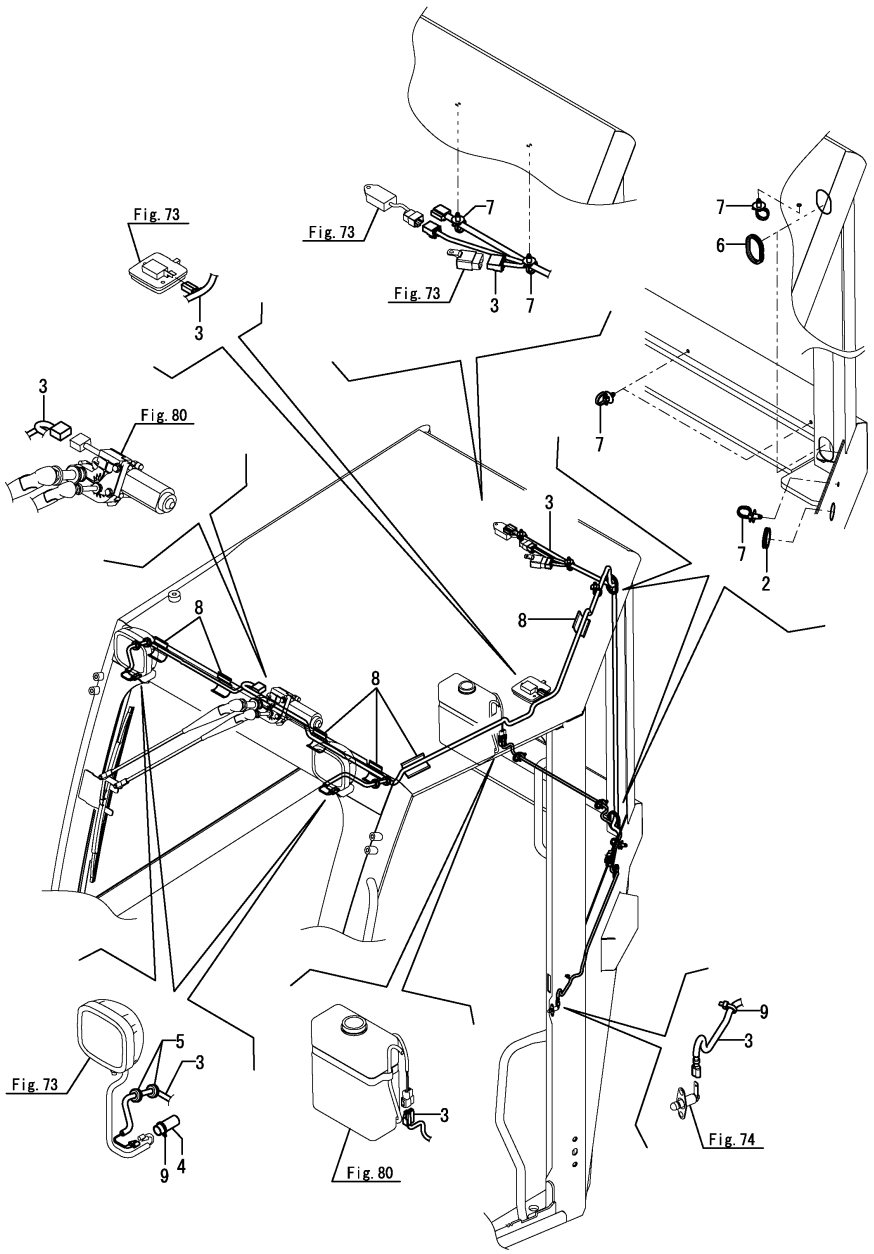

(A)=SV100-2A C(US) (D)=
(B)= (E)=
(C)= (F)=

No.	Lev.	Parts No.	Description	Q'ty (A)	(B)	(C)	(D)	(E)	(F)	I	R
2	3	172455-67940	BUSH	1							
3	3	172B11-68751	HARNESS ASSY,CABIN	1							
3-1	3	172B11-68752	HARNESS ASSY,CABIN	1						N	
	(A=M20905)										
4	3	172B11-68760	TUBE ASSY,PVC	2							
5	3	172B06-68780	GROMMET,9.5X3.2	4							
6	3	172B06-68800	BUSH,90	2							
7	3	172B06-68830	BAND, BINDING	6							
8	3	172B06-68870	TAPE,SOFT	6							
9	3	933168-55770	BAND	3							

Remarks
* Cabin assy is shown in Fig.72.

N:Old $\xleftarrow[\text{No}]{\text{Yes}}$ New, Q:Old $\xleftarrow[\text{Yes}]{\text{No}}$ New, R:Old $\xleftarrow[\text{Yes}]{\text{Yes}}$ New, S:Old $\xleftarrow[\text{No}]{\text{No}}$ New, W:Add, Z:Discontinued, F:Interchangeable by set, K:Q'ty Change

Copyright (C) 2015 YANMAR CO., LTD. All RightsReserved.

Fig.77. CABIN(GLASS)

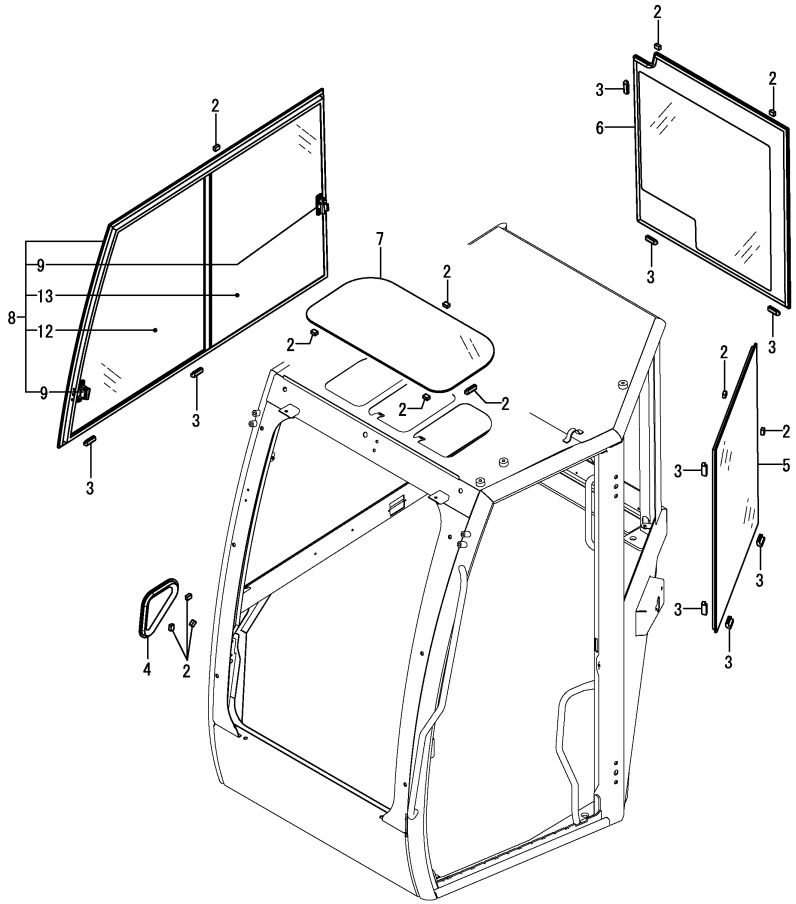

Remarks
* Cabin assy is shown in Fig.72.
(1)Attach the fillowing label to this part.
Standard arm specification : No.14A.
Long arm specification : No.14B.
(2)Attach the No.15A, 15B, 15C, 15D, 15E, 15F & 15G label to this part.
(3)Label is not illustrated.

(A)=SV100-2A C(US) (D)=
(B)= (E)=
(C)= (F)=

No.	Lev.	Parts No.	Description	Q'ty (A)	(B)	(C)	(D)	(E)	(F)	I	R
2	3	172458-63950	SPACER	12							
3	3	172458-63960	SPACER	11							
4	3	172B11-68560	GLASS,RIGHT FRONT	1							
5	3	172B11-68570	GLASS,LEFT	1							
6	3	172B11-68580	GLASS,REAR	1							1
7	3	172B11-68590	GLASS,ROOF	1							
8	3	172B11-68600	SASH ASSY	1							
9	4	172455-67770	LOCK ASSY, SASH	2							
12	4	172B11-68631	GLASS,F SASH	1							
13	4	172B11-68640	GLASS,R SASH	1							2
14A	1	172B12-03360	LABEL, LIFT Q US	1							3
14B	1	172B12-03910	LABEL, LIFT US LONG	1							3
15A	1	172437-03312	LABEL, SLOPE	1							3
15B	1	172437-03343	LABEL, TRANSPORT	1							3
15C	1	172437-03372	LABEL, NEUTRAL	1							3
15D	1	172437-03432	LABEL, STEERING	1							3
15E	1	172472-03241	LABEL, PIN US	1							3
15F	1	172B03-04400	LABEL,WARNING HITCH	1							3
15G	1	172B03-04410	LABEL,SAND US	1							3

N:Old $\overset{\text{Yes}}{\underset{\text{No}}{\leftrightarrows}}$ New, Q:Old $\overset{\text{No}}{\underset{\text{Yes}}{\leftrightarrows}}$ New, R:Old $\overset{\text{Yes}}{\underset{\text{Yes}}{\leftrightarrows}}$ New, S:Old $\overset{\text{No}}{\underset{\text{No}}{\leftrightarrows}}$ New, W:Add, Z:Discontinued, F:Interchangeable by set, K:Q'ty Change

Copyright (C) 2015 YANMAR CO., LTD. All RightsReserved.

Fig.78. CABIN(FRONT WINDOW)(1)

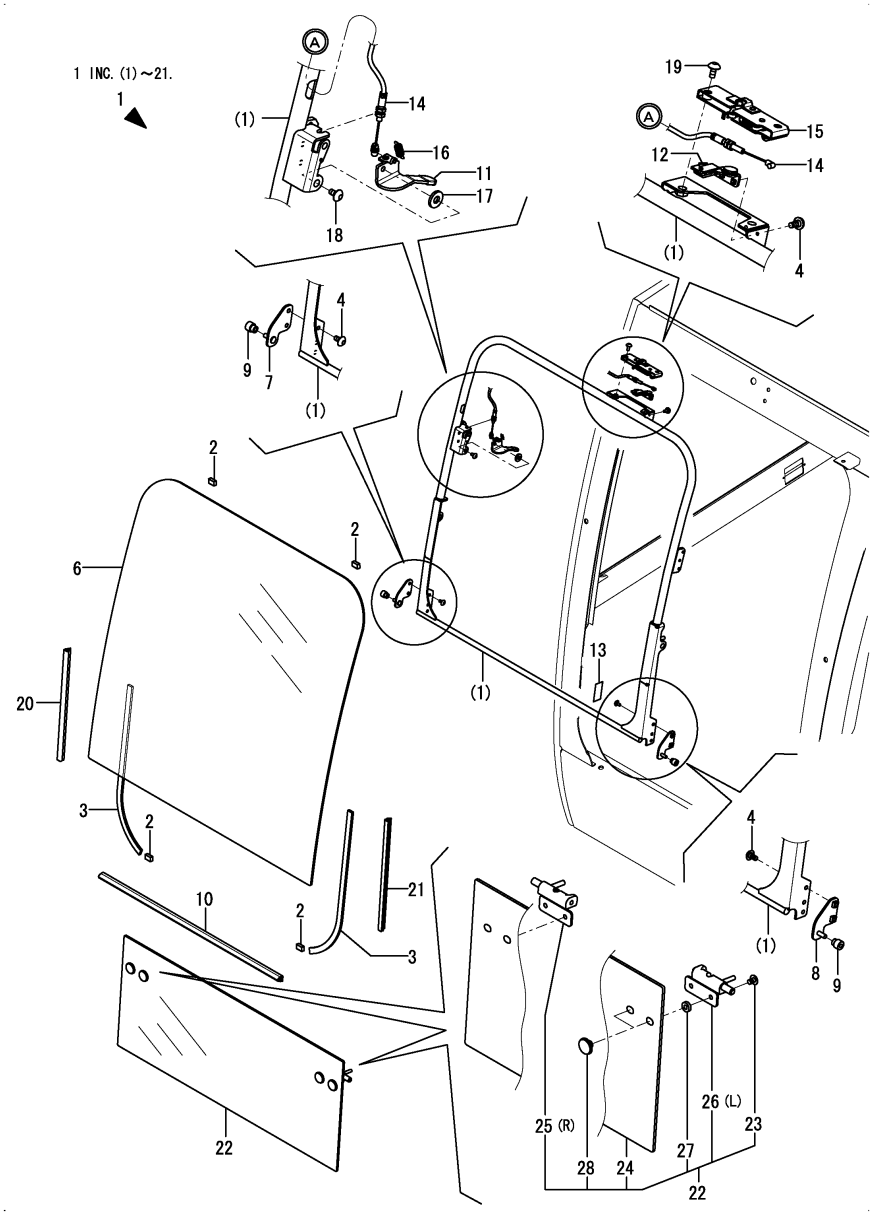

(A)=SV100-2A C(US)
(B)=
(C)=
(D)=
(E)=
(F)=

No.	Lev.	Parts No.	Description	Q'ty (A)	(B)	(C)	(D)	(E)	(F)	I	R
1	3	172B11-69160	WINDOW ASSY,FRONT	1							
2	4	172458-63950	SPACER	4							
3	4	172B11-69090	SEAL,DUM 360	2							
4	4	172463-69150	SCREW	6							
6	4	172B11-69180	GLASS,F/W	1							1
7	4	172B11-69190	STAY ASSY,F/W R	1							
8	4	172B11-69200	STAY ASSY,F/W L	1							
9	4	172B06-69211	ROLLER	2							
10	4	172B11-69260	SEAL,852	1							
11	4	172B11-69270	LEVER ASSY,F/W LOCK	1							
12	4	172B11-69280	LOCK ASSY,F/W	1							
13	4	172B11-69290	RUBBER,PLATE	1							
14	4	172B11-69340	CABLE ASSY,F/W	1							
15	4	172B11-69350	LOCK ASSY,F/W	1							
16	4	172B06-69360	SPRING	1							
17	4	172B06-69380	WASHER	1							
18	4	172B06-69390	BOLT,TORX M6X16	1							
19	4	172B06-69400	BOLT,TORX M6X20	2							
20	4	172B11-69540	GLASSRUN,388	1							
21	4	172B11-69550	GLASSRUN,388	1							
22	3	172B11-69360	GLASS ASSY,FT LOW	1							
23	4	172B11-68820	SCREW,M8X12	4							
24	4	172B11-69370	GLASS,FRONT LOWER	1							
25	4	172B11-69380	LATCH ASSY,R	1							
26	4	172B11-69390	LATCH ASSY,L	1							
27	4	172B11-69400	RUBBER,PACKING	4							
28	4	172B11-69410	RETAINER,M8	4							
29A	1	172437-03351	LABEL,GREASE CYL.	1							2

Remarks
* Cabin assy is shown in Fig.72.
(1)Attach the No.29A label to this part.
(2)Label is not illustrated.

N:Old $\frac{\text{Yes}}{\text{No}}$ New, Q:Old $\frac{\text{No}}{\text{Yes}}$ New, R:Old $\frac{\text{Yes}}{\text{Yes}}$ New, S:Old $\frac{\text{No}}{\text{No}}$ New, W:Add, Z:Discontinued, F:Interchangeable by set, K:Q'ty Change

Copyright (C) 2015 YANMAR CO., LTD. All RightsReserved.

Fig.79. CABIN(FRONT WINDOW)(2)

(A)=SV100-2A C(US)
(B)=
(C)=
(D)=
(E)=
(F)=

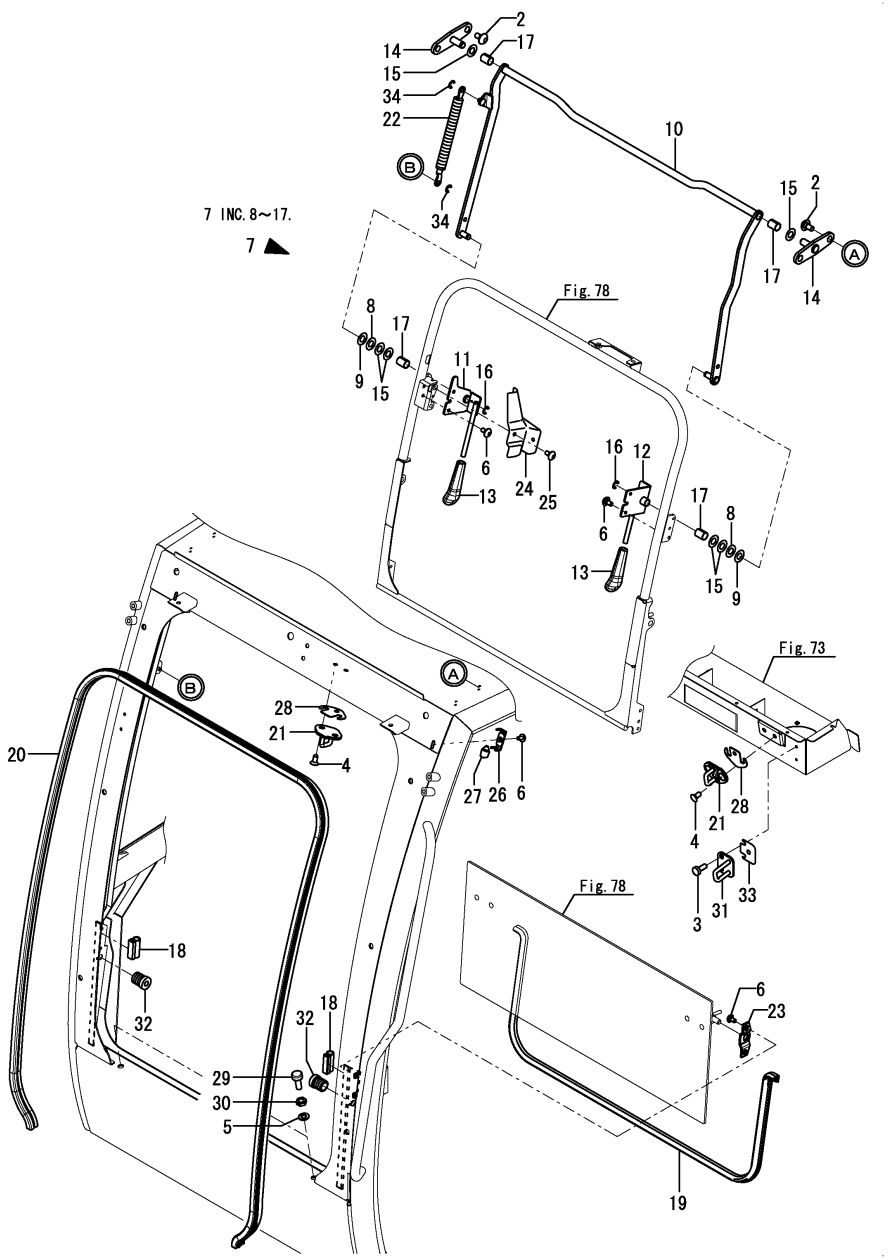

No.	Lev.	Parts No.	Description	Q'ty (A)	(B)	(C)	(D)	(E)	(F)	I	R
2	3	172458-63730	SCREW	4							
3	3	172B06-68360	BOLT, M6X16	2							
4	3	172B11-68830	SCREW,M8X20	4							
5	3	172B11-68860	WASHER,M10	2							
6	3	172463-69150	SCREW	12							
7	3	172B11-69300	LINK ASSY,F/W	1							
8	4	172B11-68870	WASHER,M12	2							
9	4	172463-69240	WASHER, 12.5X26	2							
10	4	172B11-69310	LINK ASSY,F/W	1							
11	4	172B11-69320	BRACKET ASSY,LINK R	1							
12	4	172B11-69330	BRACKET ASSY,LINK L	1							
13	4	172B06-69370	KNOB	2							
14	4	172B11-69440	BRACKET ASSY,LINK	2							
15	4	172B06-69450	WASHER	6							
16	4	22272-000080	RING, E- 8	2							
17	4	24550-012200	BUSH, 12X20	4							
18	3	172B11-69430	SEAL,40	2							
19	3	172B11-69450	SEAL,1410	1							
20	3	172B11-69460	SEAL,GLASS FRONT	1							
21	3	172B11-69470	STRIKER	2							
22	3	172B11-69480	SPRING,GASS	1							
23	3	172B11-69490	HOLDER,LATCH	2							
24	3	172B11-69500	COVER,LOCK HANDLE R	1							
25	3	172B06-69510	CLIP,TREE	2							
26	3	172B11-69510	BRACKET ASSY,STOPPER	2							
27	3	172B11-69520	RUBBER,STOPPER	2							
28	3	172B11-69530	SHIM	2							
29	3	172455-69550	STOPPER B	2							
30	3	172455-69560	NUT	2							
31	3	172B11-69560	STRIKER ASSY,2NDLOCK	1							
32	3	172B11-69570	RUBBER,STOPPER	2							
33	3	172B11-69580	SHIM	1							
34	3	22272-000060	RING, E- 6	2							

Remarks
* Cabin assy is shown in Fig.72.

N:Old $\xleftarrow[\text{No}]{\text{Yes}}$ New, Q:Old $\xleftarrow[\text{Yes}]{\text{No}}$ New, R:Old $\xleftarrow[\text{Yes}]{\text{Yes}}$ New, S:Old $\xleftarrow[\text{No}]{\text{No}}$ New, W:Add, Z:Discontinued, F:Interchangeable by set, K:Q'ty Change

Copyright (C) 2015 YANMAR CO., LTD. All RightsReserved.

Fig.80. CABIN(WIPER & WINDOW WASHER)

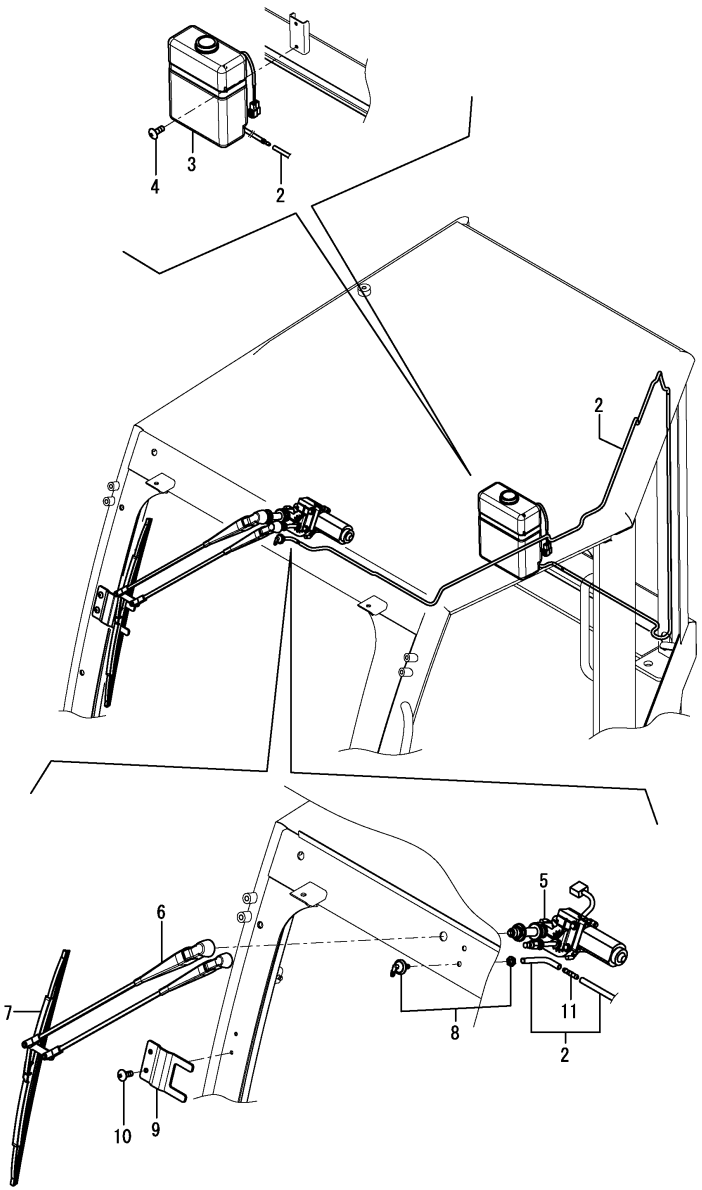

(A)=SV100-2A C(US)
(B)=
(C)=
(D)=
(E)=
(F)=

No.	Lev.	Parts No.	Description	Q'ty (A)	(B)	(C)	(D)	(E)	(F)	I	R
2	3	172B11-68030	HOSE,2710	1							
3	3	172B11-68340	TANK, WASHER	1							
4	3	172B11-68800	SCREW,M6X16	2							
5	3	172B11-69220	MOTOR, WIPER	1							
6	3	172B11-69230	ARM,WIPER	1							
7	3	172B06-69240	BLADE ASSY,500	1							
8	3	172B11-69240	CONNECTOR,90 ELBOW	1							
9	3	172B11-69250	BRACKET ASSY,WIPER	1							
10	3	172B11-69420	SCREW,TR-HD	2							
11	3	172B11-69700	VALVE ASSY	1							

Remarks
* Cabin assy is shown in Fig.72.

N:Old $\overset{\text{Yes}}{\underset{\text{No}}{\leftrightarrows}}$ New, Q:Old $\overset{\text{No}}{\underset{\text{Yes}}{\leftrightarrows}}$ New, R:Old $\overset{\text{Yes}}{\underset{\text{Yes}}{\leftrightarrows}}$ New, S:Old $\overset{\text{No}}{\underset{\text{No}}{\leftrightarrows}}$ New, W:Add, Z:Discontinued, F:Interchangeable by set, K:Q'ty Change

Copyright (C) 2015 YANMAR CO., LTD. All RightsReserved.

Fig.81. CABIN(RADIO)

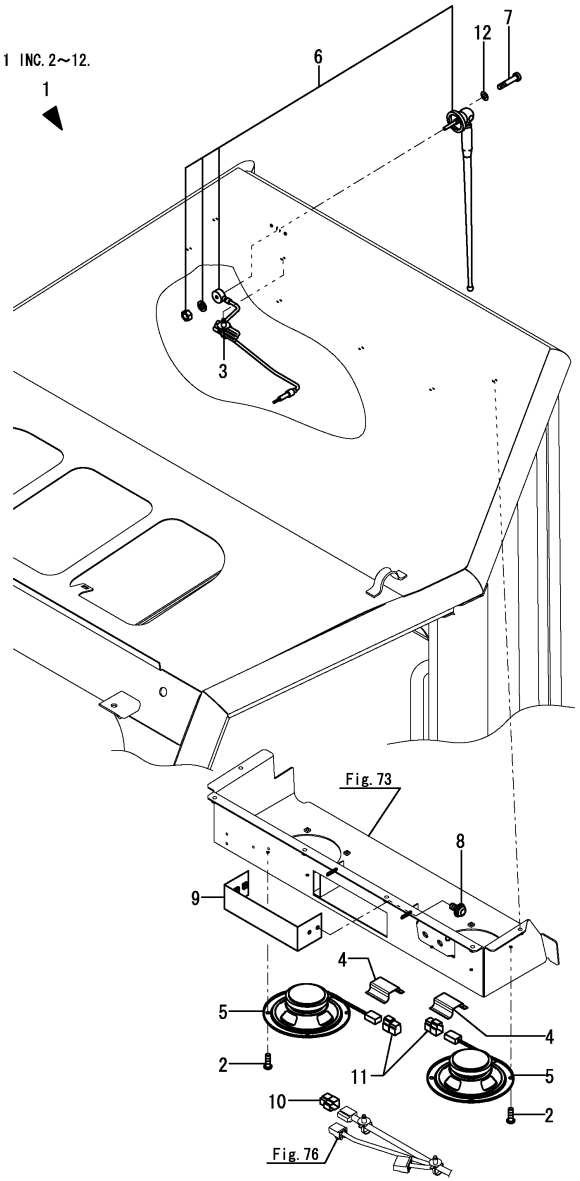

(A)=SV100-2A C(US) (D)=
(B)= (E)=
(C)= (F)=

No.	Lev.	Parts No.	Description	Q'ty (A)	(B)	(C)	(D)	(E)	(F)	I	R
1	2	172B11-69610	ELECTRIC ASSY,NO RAD	1							
2	3	172B06-68390	BOLT, M4X12	8							
3	3	172B06-68830	BAND, BINDING	1							
4	3	172B06-68870	TAPE,SOFT	3							
5	3	172B06-69571	SPEAKER	2							
6	3	172B06-69581	ANTENNA, RADIO	1							
7	3	172B06-69600	BOLT, M4X20	2							
8	3	172B11-69630	SCREW,M4X12 TREAT	4							
9	3	172B11-69640	COVER,RADIO	1							
10	3	172B11-69650	CONNECTOR	1							
11	3	172B11-69660	CONNECTOR	2							
12	3	22137-040000	WASHER, 4	2							

Remarks
* Cabin assy is shown in Fig.72.

N:Old $\xleftarrow[\text{No}]{\text{Yes}}$ New, Q:Old $\xleftarrow[\text{Yes}]{\text{No}}$ New, R:Old $\xleftrightarrow[\text{Yes}]{\text{Yes}}$ New, S:Old $\xleftrightarrow[\text{No}]{\text{No}}$ New, W:Add, Z:Discontinued, F:Interchangeable by set, K:Q'ty Change

Copyright (C) 2015 YANMAR CO., LTD. All RightsReserved.

Fig.82. CABIN DOOR

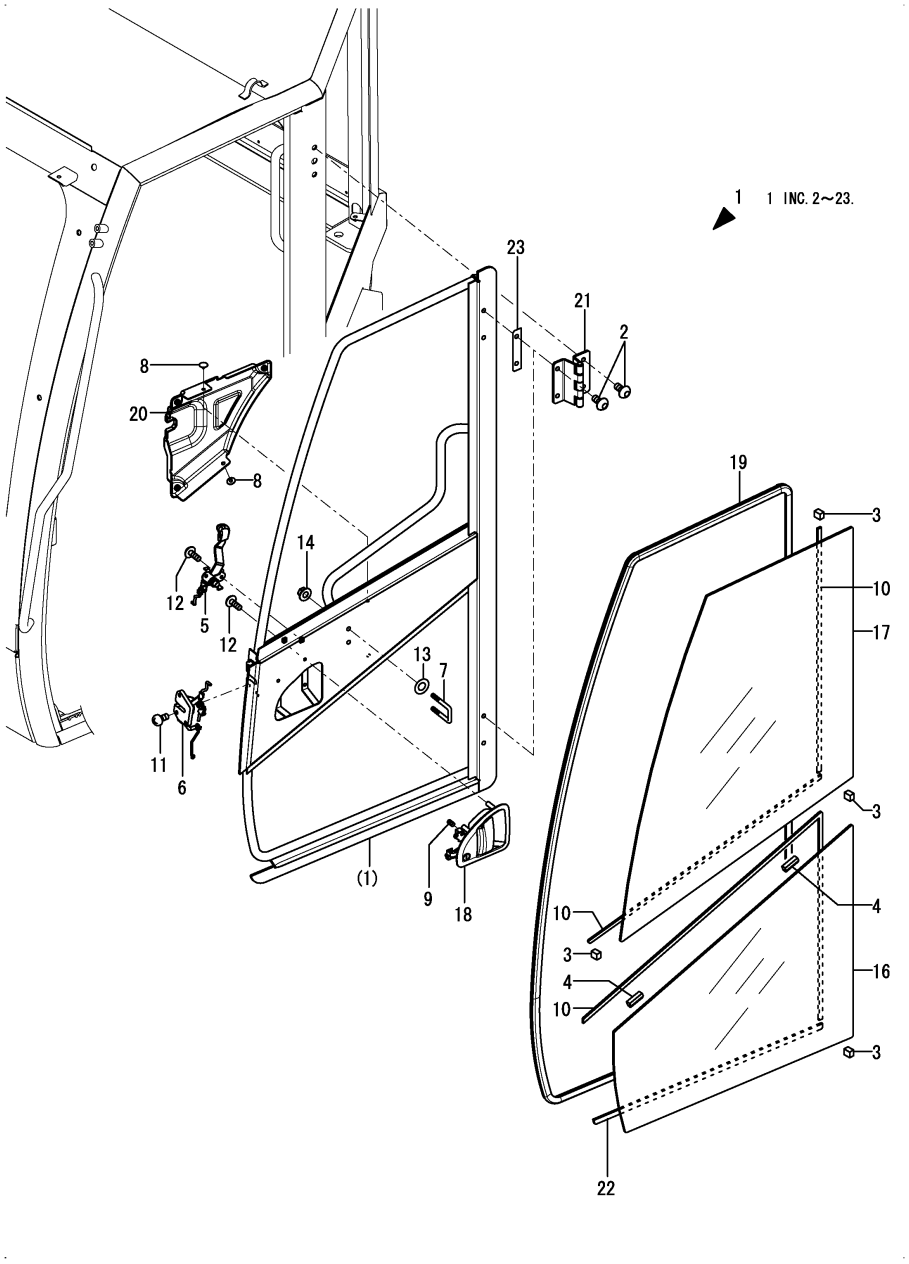

(A)=SV100-2A C(US) (D)=
(B)= (E)=
(C)= (F)=

No.	Lev.	Parts No.	Description	Q'ty (A)	(B)	(C)	(D)	(E)	(F)	I	R
1	2	172B11-69801	DOOR ASSY, CABIN	1							
2	3	172458-63730	SCREW	8							
3	3	172458-63950	SPACER	4							
4	3	172458-63960	SPACER	2							
5	3	172B06-68940	HANDLE ASSY	1							
6	3	172B06-68950	LOCK ASSY,DOOR	1							
7	3	172B06-69010	HOOK, DOOR	1							
8	3	172B11-69020	CLIP,TREE	5							
9	3	172B06-69040	LOCK,SCREW	1							
10	3	172B11-69070	SEAL,DUM 2500	1							
11	3	172B06-69080	SCREW, M6X20	3							
12	3	172B06-69090	SCREW	5							
13	3	172455-69270	WASHER	2							
14	3	172455-69710	NUT	2							
16	3	172B11-69820	GLASS, DOOR LOW	1							
17	3	172B11-69830	GLASS, DOOR UP	1							
18	3	172B11-69861	HANDLE ASSY,OUTER	1							
19	3	172B11-69870	SEAL, DOOR	1							
20	3	172B11-69880	COVER,DOOR INNER	1							
21	3	172B11-69890	HINGE ASSY,DOOR	2							
22	3	172B11-69920	SEAL,DUM 600	1							
23	3	172B11-69930	SHIM	1							

Remarks
* Cabin assy is shown in Fig.72.

N:Old $\overset{\text{Yes}}{\underset{\text{No}}{\leftrightarrows}}$ New, Q:Old $\overset{\text{No}}{\underset{\text{Yes}}{\leftrightarrows}}$ New, R:Old $\overset{\text{Yes}}{\underset{\text{Yes}}{\leftrightarrows}}$ New, S:Old $\overset{\text{No}}{\underset{\text{No}}{\leftrightarrows}}$ New, W:Add, Z:Discontinued, F:Interchangeable by set, K:Q'ty Change

Copyright (C) 2015 YANMAR CO., LTD. All RightsReserved.

Fig.83. REARVIEW MIRROR

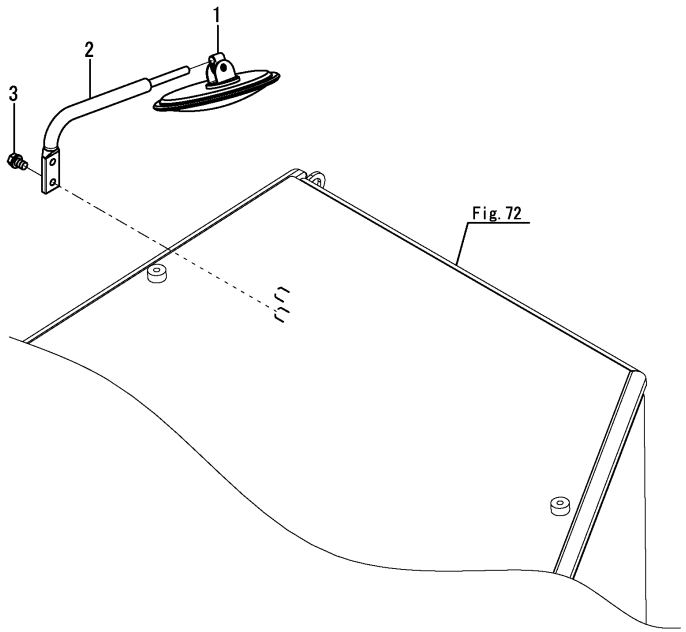

(A)=SV100-2A C(US) (D)=
(B)= (E)=
(C)= (F)=

No.	Lev.	Parts No.	Description	Q'ty (A)	(B)	(C)	(D)	(E)	(F)	I	R
1	1	172A25-68500	MIRROR, REARVIEW	1							
2	1	172A69-68850	BRACKET ASSY, MIRROR	1							
3	1	26013-100252	BOLT, SPRING M10X 25	2							

N:Old $\xleftrightarrow[\text{No}]{\text{Yes}}$ New, Q:Old $\xleftrightarrow[\text{Yes}]{\text{No}}$ New, R:Old $\xleftrightarrow[\text{Yes}]{\text{Yes}}$ New, S:Old $\xleftrightarrow[\text{No}]{\text{No}}$ New, W:Add, Z:Discontinued, F:Interchangeable by set, K:Q'ty Change

Copyright (C) 2015 YANMAR CO., LTD. All RightsReserved.

Fig.84. CABIN(COVER)

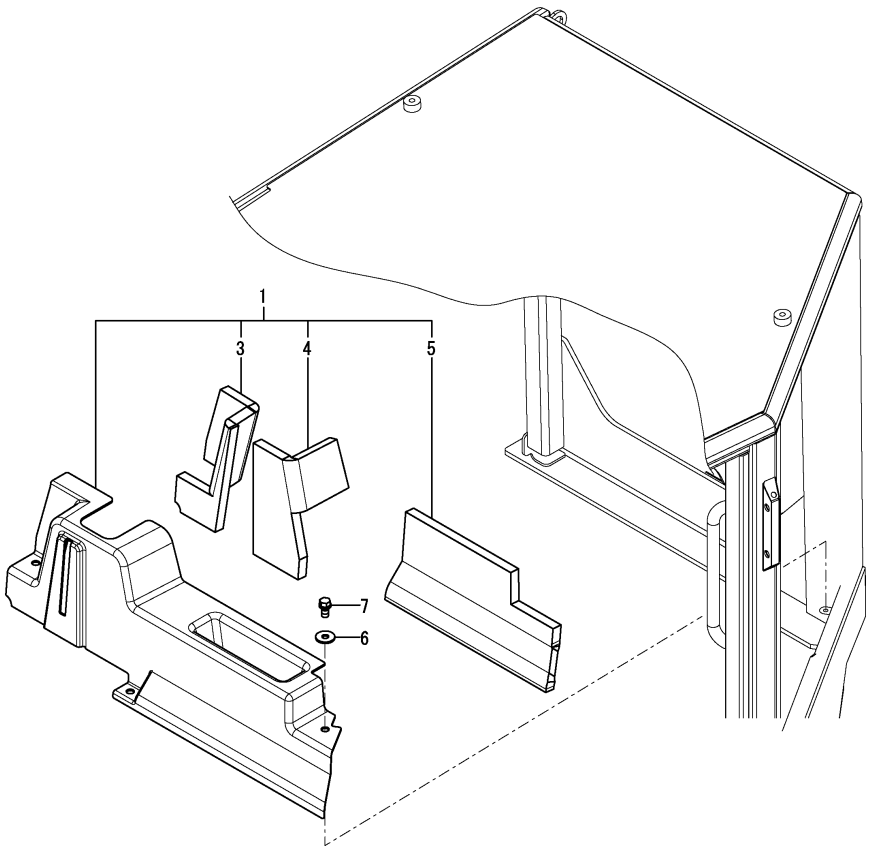

(A)=SV100-2A C(US)
(B)=
(C)=
(D)=
(E)=
(F)=

No.	Lev.	Parts No.	Description	Q'ty (A)	(B)	(C)	(D)	(E)	(F)	I	R
1	1	172B11-68940	COVER ASSY,WASHER TA	1							1
1-1	1	172B11-68840	COVER ASSY,WASHER TD	1						S	2
	(A=MAF001)										
3	2	172B11-68960	SPONGE,WT COVER A	1							
4	2	172B11-68970	SPONGE,WT COVER B	1							
5	2	172B11-68980	SPONGE,WT COVER C	1							
6	1	22157-080000	WASHER, 8	3							
6-1	1	172458-62430	WASHER	3						S	
	(A=MAF001)										
7	1	26013-080162	BOLT, SPRING M8X 16	3							
7-1	1	172137-69850	SCREW	3						S	
	(A=MAF001)										

Remarks
(1)Color = WARM IVORY.
(2)Color = PANTONE 425C.

N:Old $\xleftrightarrow[\text{No}]{\text{Yes}}$ New, Q:Old $\xleftrightarrow[\text{Yes}]{\text{No}}$ New, R:Old $\xleftrightarrow[\text{Yes}]{\text{Yes}}$ New, S:Old $\xleftrightarrow[\text{No}]{\text{No}}$ New, W:Add, Z:Discontinued, F:Interchangeable by set, K:Q'ty Change

Copyright (C) 2015 YANMAR CO., LTD. All RightsReserved.

Fig.85. SIDE MIRROR

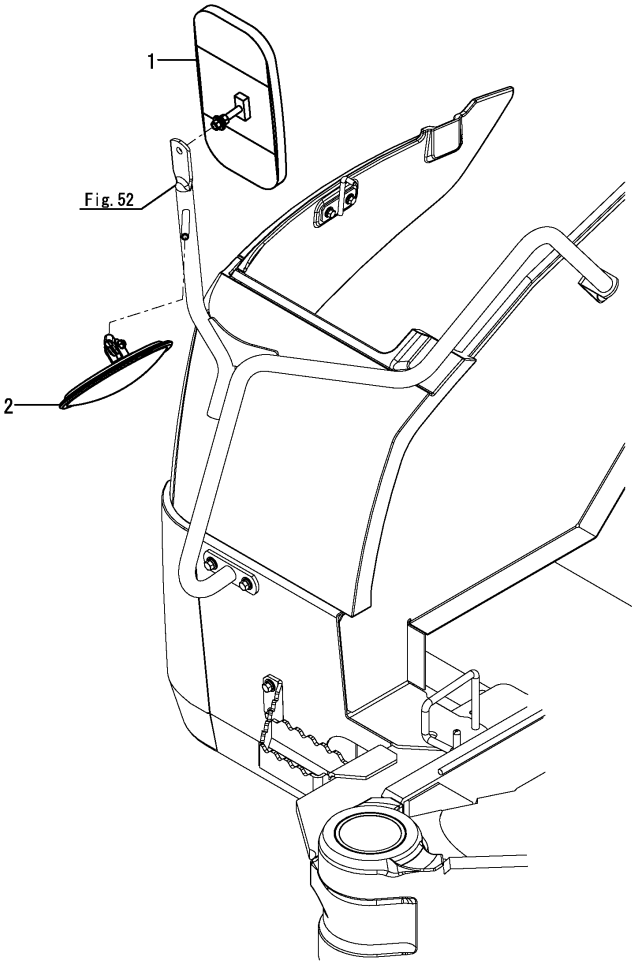

(A)=SV100-2A C(US) (D)=
(B)= (E)=
(C)= (F)=

No.	Lev.	Parts No.	Description	Q'ty (A)	(B)	(C)	(D)	(E)	(F)	I	R
1	1	1W3855-50160	MIRROR ASSY, BACK	1							
2	1	172A25-68500	MIRROR, REARVIEW	1							

N:Old $\xleftrightarrow[\text{No}]{\text{Yes}}$ New, Q:Old $\xleftrightarrow[\text{Yes}]{\text{No}}$ New, R:Old $\xleftrightarrow[\text{Yes}]{\text{Yes}}$ New, S:Old $\xleftrightarrow[\text{No}]{\text{No}}$ New, W:Add, Z:Discontinued, F:Interchangeable by set, K:Q'ty Change

Copyright (C) 2015 YANMAR CO., LTD. All RightsReserved.

Fig.86. HYDRAULIC PUMP MOUNT & JOINT

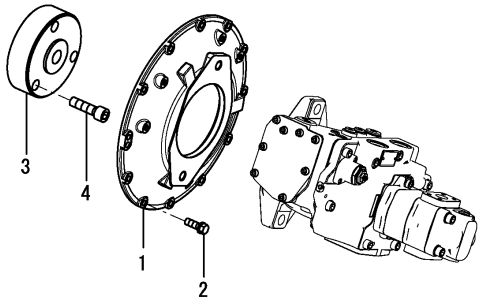

(A)=SV100-2A C(US) (D)=
(B)= (E)=
(C)= (F)=

No.	Lev.	Parts No.	Description	Q'ty (A)	(B)	(C)	(D)	(E)	(F)	I	R
1	1	172B12-71100	MOUNT, PUMP	1							
2	1	26013-100302	BOLT, SPRING M10X 30	12							
3	1	172499-71200	COUPLING	1							
4	1	172187-71210	BOLT	3							

N:Old $\xleftrightarrow[\text{No}]{\text{Yes}}$ New, Q:Old $\xleftrightarrow[\text{Yes}]{\text{No}}$ New, R:Old $\xleftrightarrow[\text{Yes}]{\text{Yes}}$ New, S:Old $\xleftrightarrow[\text{No}]{\text{No}}$ New, W:Add, Z:Discontinued, F:Interchangeable by set, K:Q'ty Change

Copyright (C) 2015 YANMAR CO., LTD. All RightsReserved.

Fig.87. HYDRAULIC PUMP

(A)=SV100-2A C(US) (D)=
(B)= (E)=
(C)= (F)=

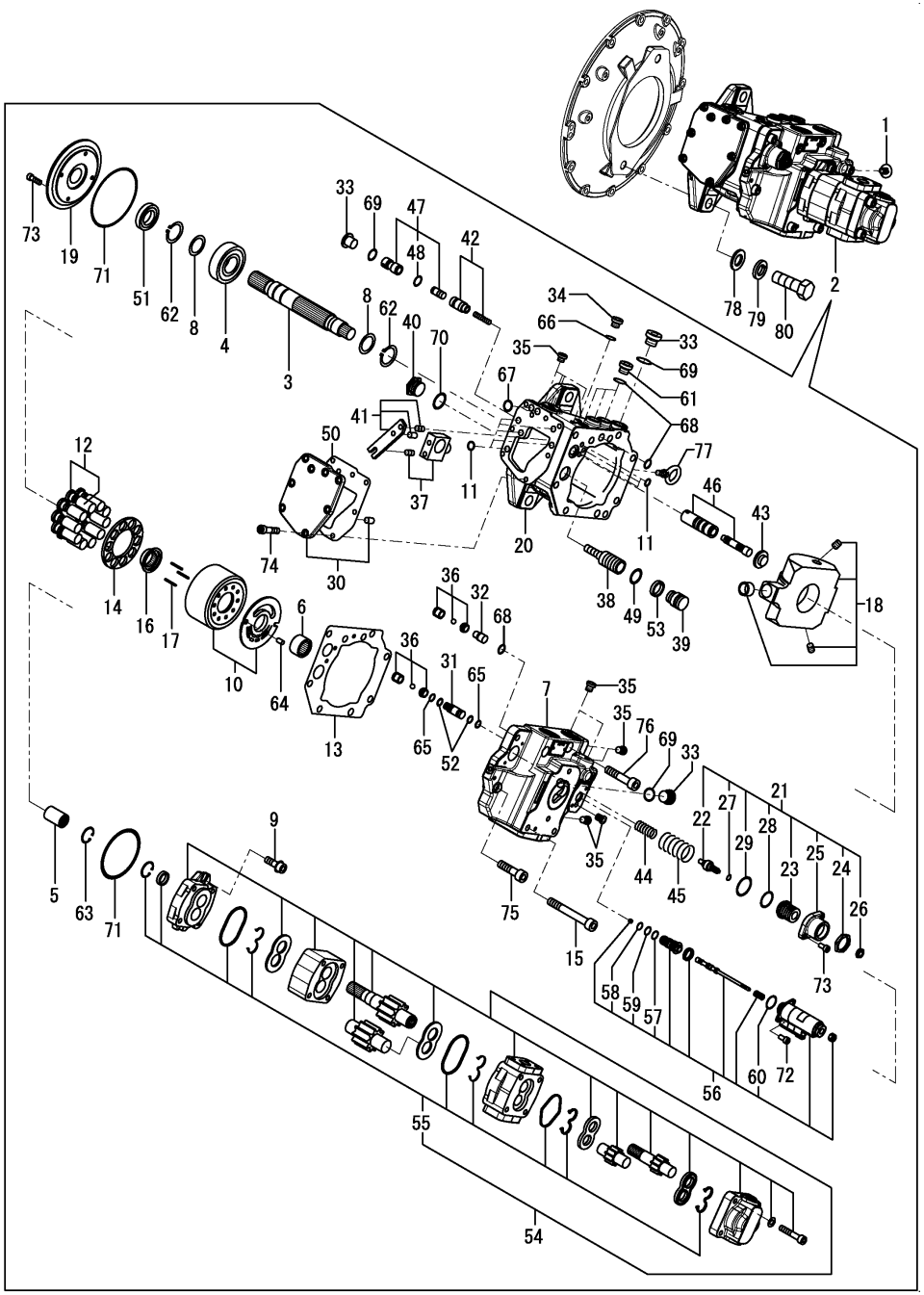

No.	Lev.	Parts No.	Description	Q'ty (A)	(B)	(C)	(D)	(E)	(F)	I	R
1	1	172122-17190	CLIP, TREE	1							
2	1	172B12-73100	PUMP ASSY	1							
3	2	172B12-70010	SHAFT	1							
4	2	172B11-70020	BEARING, BALL	1							
5	2	172B12-70020	COUPLING	1							
6	2	172B11-70030	BEARING, NEEDLE	1							
7	2	172B12-70030	COVER, VALVE	1							
8	2	172B11-70040	SPACER	2							
9	2	172B12-70040	SOCKET, FLANGE	2							
10	2	172B11-70050	CYLINDER ASSY	1							
11	2	172B12-70050	RING, SQUARE	10							
12	2	172B11-70060	PISTON ASSY	1							
13	2	172B12-70060	SEAT, PACKING	1							
14	2	172B11-70070	PLATE	1							
15	2	172B12-70070	BOLT, M12X110	3							
16	2	172B11-70080	BUSH	1							
17	2	172B11-70090	SPRING	10							
18	2	172B11-70100	PLATE ASSY	1							
19	2	172B11-70110	COVER	1							
20	2	172B11-70120	CASE	1							
21	2	172B11-70130	COVER ASSY	1							
22	3	172B11-70350	ROD, AJUST	1							
23	3	172B11-70360	NUT, ADJUST	1							
24	3	172B11-70370	NUT, LOCK	1							
25	3	172B11-70380	COVER, SPRING	1							
26	3	172B11-70520	NUT	1							
27	3	24315-000090	O-RING, 1BP9.0	1							
28	3	24315-000260	O-RING, 1BP26.0	1							
29	3	24325-000350	O-RING, 1BG35.0	1							
30	2	172B11-70140	COVER ASSY	1							
31	2	172B11-70160	PIPE, SEAL	1							
32	2	172B11-70170	SPACER	1							
33	2	172B11-70190	PLUG, G1/2	3							
34	2	172B11-70200	PLUG, G1/8	1							
35	2	172B11-70210	PLUG, M7X0.75	11							
36	2	172B11-70220	VALVE ASSY, CHECK	2							
37	2	172B11-70240	PIN ASSY	1							
38	2	172B11-70250	PISTON, SERVO	1							
39	2	172B11-70260	STOPPER, L	1							
40	2	172B11-70270	PLUG	1							
41	2	172B11-70300	LEVER ASSY, FEED BAC	1							
42	2	172B11-70310	PISTON ASSY	1							
43	2	172B11-70320	SEAT, SPRING	1							
44	2	172B11-70330	SPRING, INNER	1							
45	2	172B11-70340	SPRING, OUTER	1							
46	2	172B11-70400	SPOOL ASSY	1							
47	2	172B11-70410	PISTON ASSY,PF	1							
48	3	172B11-70450	O-RING, AS568-015	1							
49	2	172B11-70460	O-RING	1							
50	2	172B11-70470	SEAT, PACKING T	1							
51	2	172B11-70490	SEAL, OIL	1							

N:Old $\frac{\text{Yes}}{\text{No}}$ New, Q:Old $\frac{\text{No}}{\text{Yes}}$ New, R:Old $\frac{\text{Yes}}{\text{Yes}}$ New, S:Old $\frac{\text{No}}{\text{No}}$ New, W:Add, Z:Discontinued, F:Interchangeable by set, K:Q'ty Change

++ CONTINUE ++

Copyright (C) 2015 YANMAR CO., LTD. All RightsReserved.

Fig.87. HYDRAULIC PUMP

(A)=SV100-2A C(US) (D)=
(B)= (E)=
(C)= (F)=

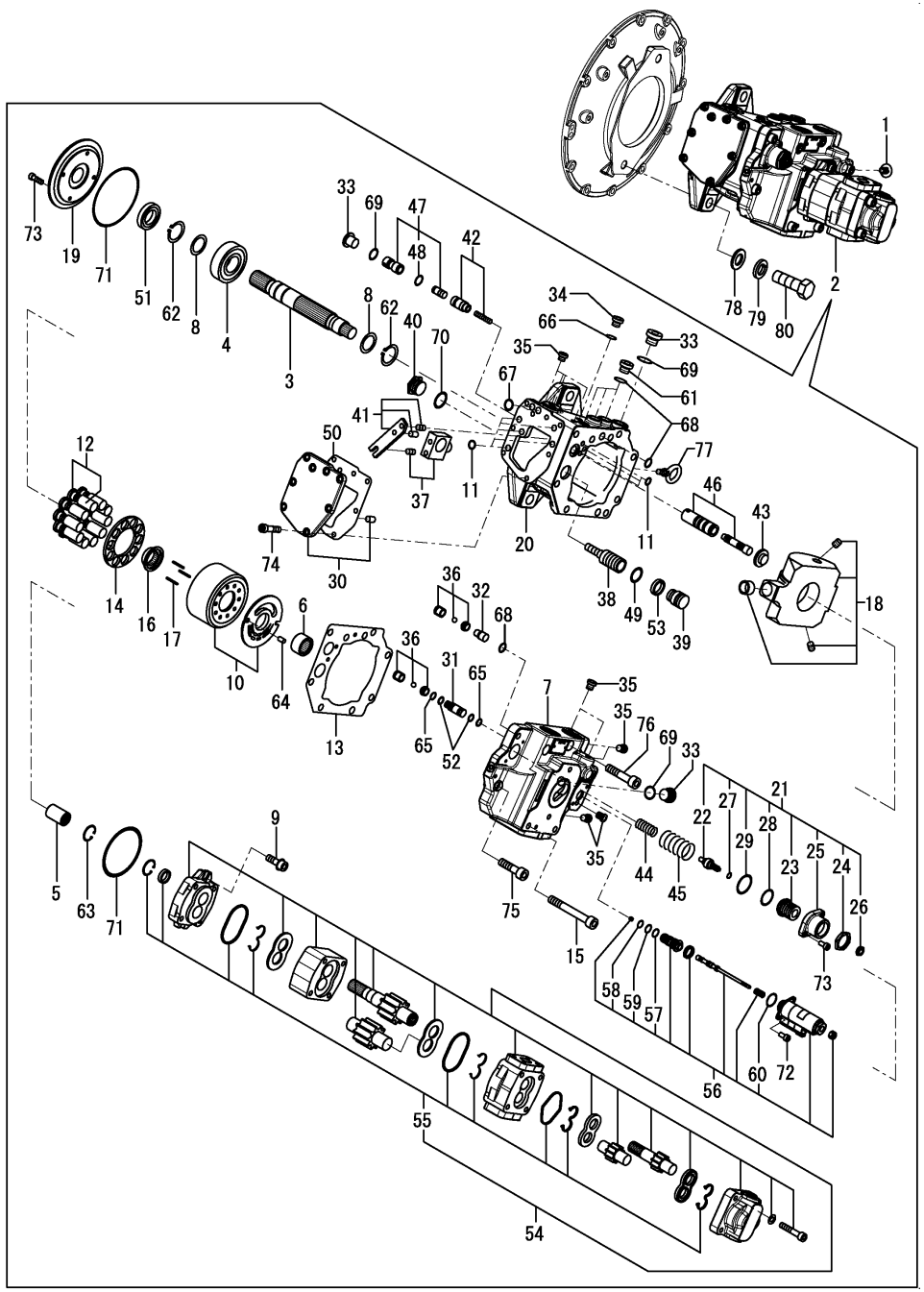

No.	Lev.	Parts No.	Description	Q'ty (A)	(B)	(C)	(D)	(E)	(F)	I	R
52	2	172B11-70500	RING, BACK UP	2							
53	2	172B11-70510	RING, BACK UP	1							
54	2	172B12-73150	PUMP ASSY, GEAR	1							
55	3	172B12-73160	SEAL KIT	1							
56	2	172B12-73200	SOLENOID ASSY	1							
57	3	172B11-70450	O-RING, AS568-015	1							
58	3	172B12-73210	O-RING, AS568-013	1							
59	3	172A25-74430	O-RING	1							
60	3	24315-000200	O-RING, 1BP20.0	1							
61	2	172455-77140	PLUG	3							
62	2	22242-000350	RING, 35	2							
63	2	22252-000190	RING, 19	1							
64	2	22351-060014	PIN, SPRING 6.0X14	1							
65	2	24315-000070	O-RING, 1BP7.0	2							
66	2	24315-000080	O-RING, 1BP8.0	1							
67	2	24315-000100	O-RING, 1BP10.0	2							
68	2	24315-000110	O-RING, 1BP11.0	5							
69	2	24315-000180	O-RING, 1BP18.0	3							
70	2	24315-000240	O-RING, 1BP24.0	1							
71	2	24325-000850	O-RING, 1BG85.0	2							
72	2	26450-050122	BOLT, M5X 12	2							
73	2	26450-060202	BOLT, M6X 20	6							
74	2	26450-080252	BOLT, M8X 25	8							
75	2	26450-120402	BOLT, M12X 40	3							
76	2	26450-120702	BOLT, M12X 70	2							
77	2	26617-100002	BOLT, EYE M10	1							
78	1	22137-180000	WASHER, 18	2							
79	1	22217-180000	WASHER, SPRING 18	2							
80	1	26116-180552	BOLT, M18X 55 PLATED	2							

N:Old $\frac{\text{Yes}}{\text{No}}$ New, Q:Old $\frac{\text{No}}{\text{Yes}}$ New, R:Old $\frac{\text{Yes}}{\text{Yes}}$ New, S:Old $\frac{\text{No}}{\text{No}}$ New, W:Add, Z:Discontinued, F:Interchangeable by set, K:Q'ty Change

Copyright (C) 2015 YANMAR CO., LTD. All RightsReserved.

Fig.88. CONTROL VALVE PLATE

(A)=SV100-2A C(US)
(B)=
(C)=
(D)=
(E)=
(F)=

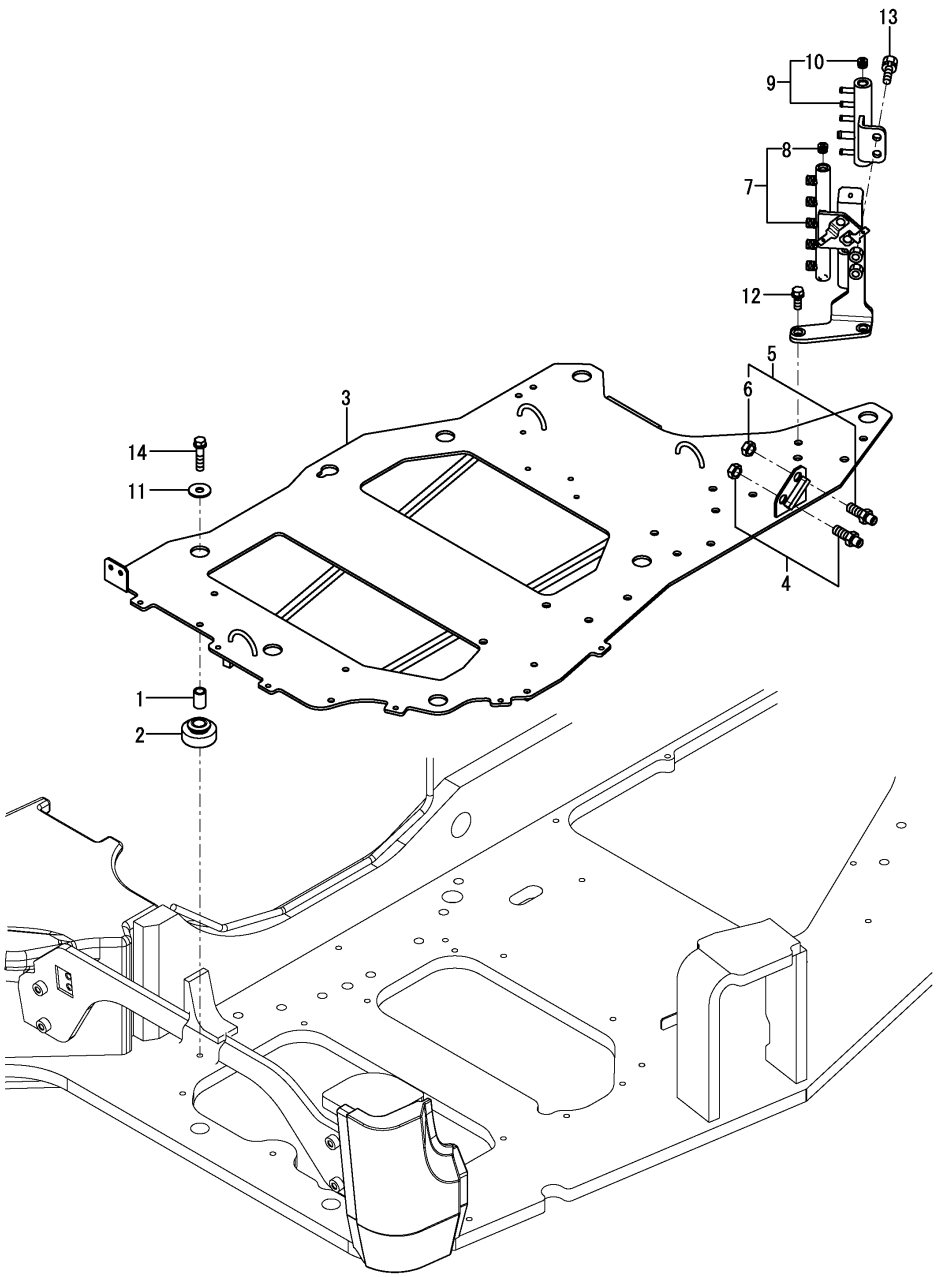

No.	Lev.	Parts No.	Description	Q'ty (A)	(B)	(C)	(D)	(E)	(F)	I	R
1	1	172A69-71550	COLLAR	7							
2	1	172A69-71560	GROMMET	7							
3	1	172B11-71600	PLATE ASSY, VALVE	1							
4	1	172151-76050	JOINT	1							
5	1	172A89-76150	JOINT	1							
6	2	172A89-76160	NUT, LOCK	1							
7	1	172A69-76680	MOUNT ASSY, BLOCK	1							
8	2	23871-020000	PLUG, R02	1							
9	1	172B11-76720	MOUNT ASSY, BLOCK DR	1							
10	2	23871-020000	PLUG, R02	1							
11	1	22157-100000	WASHER, 10	7							
12	1	26013-100252	BOLT, SPRING M10X 25	2							
13	1	26013-100252	BOLT, SPRING M10X 25	2							
14	1	26013-100452	BOLT, SPRING M10X 45	7							

N:Old $\frac{\text{Yes}}{\text{No}}$ New, Q:Old $\frac{\text{No}}{\text{Yes}}$ New, R:Old $\frac{\text{Yes}}{\text{Yes}}$ New, S:Old $\frac{\text{No}}{\text{No}}$ New, W:Add, Z:Discontinued, F:Interchangeable by set, K:Q'ty Change

Copyright (C) 2015 YANMAR CO., LTD. All RightsReserved.

Fig.89. BOOM CYLINDER

(A)=SV100-2A C(US)
(B)=
(C)=
(D)=
(E)=
(F)=

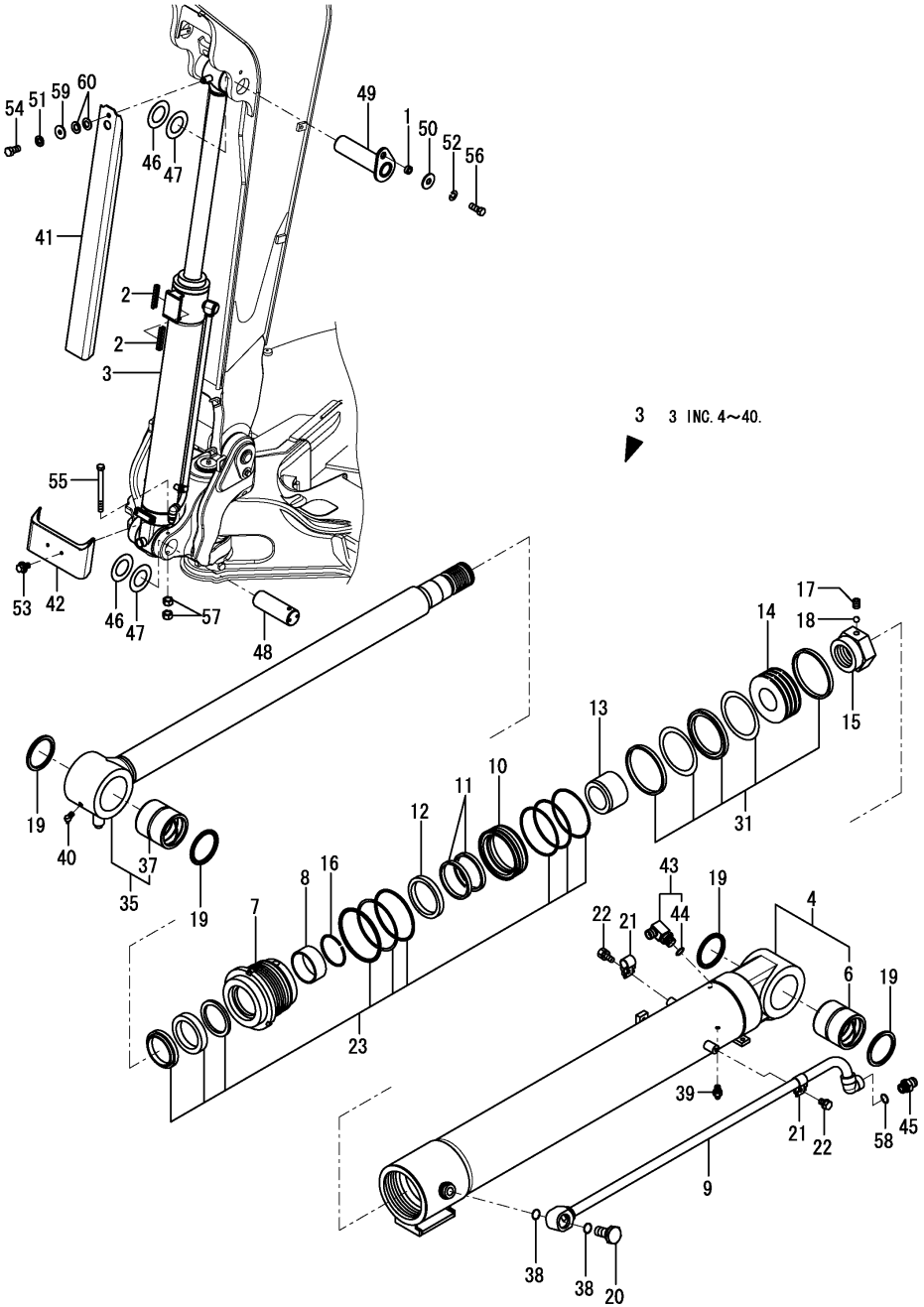

No.	Lev.	Parts No.	Description	Q'ty (A)	(B)	(C)	(D)	(E)	(F)	I	R
1	1	172155-45790	SPACER	1							
2	1	172162-61770	GUIDE, SLIDE	2							
3	1	172A69-72100-N	CYLINDER ASSY, BOOM	1							
4	2	172A69-72110-N	TUBE KIT, CYLINDER	1							
6	3	172A69-72130	BUSH, PIN	1							
7	2	172499-72130	HEAD, CYLINDER	1							
8	2	172499-72140	BUSH	1							
9	2	172A69-72140-N	PIPE ASSY	1							
10	2	172499-72180	HOLDER	1							
11	2	172499-72190	SEAL, CUSHION	2							
12	2	172499-72200	COLLAR	1							
13	2	172499-72220	BEARING, CUSHION	1							
14	2	172499-72230	PISTON	1							
15	2	172499-72260	NUT	1							
16	2	172162-72620	RING, SNAP	1							
17	2	172162-72680	SCREW, SETTING	1							
18	2	172162-72690	BALL, STEEL	1							
19	2	172162-72700	SEAL, DUST	4							
20	2	172499-72860	PLUG	1							
21	2	172499-72870	HOLDER, PIPE	2							
22	2	172499-72880	BOLT ASSY	2							
23	2	172499-72900	SEAL SET, HEAD	1							
31	2	172499-72910	SEAL SET, PISTON	1							
35	2	172499-72930	ROD ASSY, BOOM	1							
37	3	172499-72280	BUSH, PIN	1							
38	2	24315-000260	O-RING, 1BP26.0	2							
39	2	24761-020000	NIPPLE, GREASE PT1/8	1							
40	2	24761-040000	NIPPLE, GREASE B	1							
41	1	172187-72910-N	COVER, SLIDE	1							
42	1	172A69-72950-N	COVER ASSY, BOOM	1							
43	1	172645-76560	CONNECTOR ASSY	1							
44	2	24315-000180	O-RING, 1BP18.0	1							
45	1	172112-77361	CONNECTOR	1							
46	1	172176-81700	SHIM	2							
47	1	172176-81710	SHIM	2							
48	1	172187-81801	PIN, 70X200	1							
49	1	172A89-81810	PIN ASSY	1							
50	1	22157-140000	WASHER, 14	1							
51	1	22217-100000	WASHER, SPRING 10	1							
52	1	22217-140000	WASHER, SPRING 14	1							
53	1	26014-100252	BOLT, M10X 25	2							
54	1	26116-100202	BOLT, M10X 20 PLATED	1							
55	1	26116-121402	BOLT, M12X140 PLATED	1							
56	1	26116-140352	BOLT, M14X 35 PLATED	1							
57	1	26716-120002	NUT, M12	2							
58	1	41851-000180	O-RING	1							
59	1	933147-03400	WASHER, BRAKE ARM	1							
60	1	933168-14170	SPRING	2							

N:Old $\frac{\text{Yes}}{\text{No}}$ New, Q:Old $\frac{\text{No}}{\text{Yes}}$ New, R:Old $\frac{\text{Yes}}{\text{Yes}}$ New, S:Old $\frac{\text{No}}{\text{No}}$ New, W:Add, Z:Discontinued, F:Interchangeable by set, K:Q'ty Change

Copyright (C) 2015 YANMAR CO., LTD. All RightsReserved.

Fig.90. ARM CYLINDER

(A)=SV100-2A C(US)
(B)=
(C)=
(D)=
(E)=
(F)=

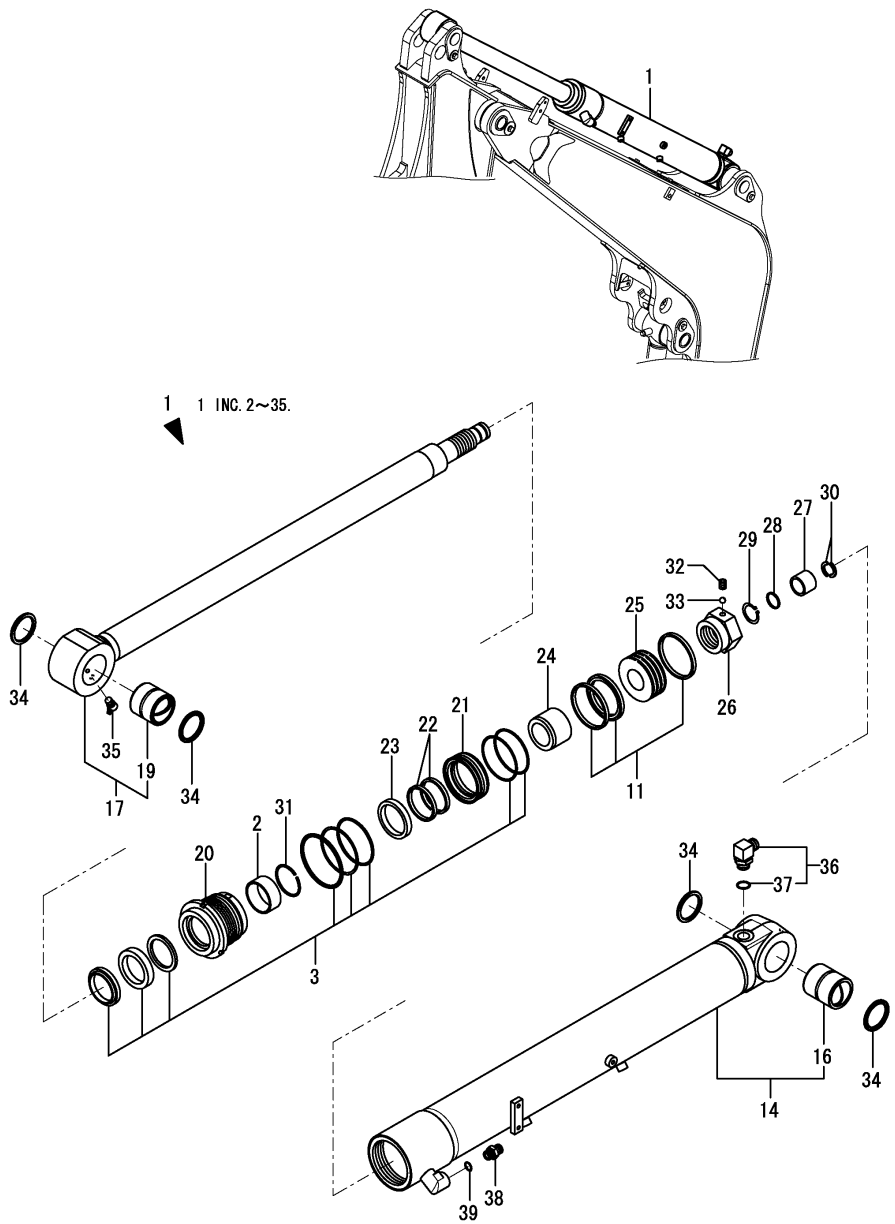

No.	Lev.	Parts No.	Description	Q'ty (A)	(B)	(C)	(D)	(E)	(F)	I	R
1	1	172A69-72300-N	CYLINDER ASSY, ARM	1							
2	2	172499-72140	BUSH	1							
3	2	172A69-72280	REPAIR KIT, CYLINDER	1							
11	2	172A69-72290	REPAIR KIT, CYLINDER	1							
14	2	172A69-72310-N	TUBE KIT, CYLINDER	1							
16	3	172A69-72480	BUSH, PIN	1							
17	2	172A69-72330	ROD KIT, PISTON	1							
19	3	172A69-72490	BUSH, PIN	1							
20	2	172A69-72350	HEAD, CYLINDER	1							
21	2	172A69-72370	HOLDER	1							
22	2	172A69-72380	SEAL, CUSHION	2							
23	2	172A69-72390	COLLOR	1							
24	2	172A69-72400	BEARING, CUSHION	1							
25	2	172A69-72410	PISTON	1							
26	2	172A69-72430	NUT	1							
27	2	172A69-72440	BEARING, CUSHION	1							
28	2	172A69-72450	SEAL, CUSHION	1							
29	2	172A69-72460	RING,SNAP	1							
30	2	172A69-72470	STOPPER	2							
31	2	172162-72620	RING, SNAP	1							
32	2	172162-72680	SCREW, SETTING	1							
33	2	172162-72690	BALL, STEEL	1							
34	2	172162-72950	SEAL, DUST	4							
35	2	24761-050000	NIPPLE, GREASE C	1							
36	1	172165-76380	CONNECTOR ASSY	1							
37	2	24315-000240	O-RING, 1BP24.0	1							
38	1	172112-77361	CONNECTOR	1							
39	1	41851-000180	O-RING	1							

N:Old $\xleftrightarrow[\text{No}]{\text{Yes}}$ New, Q:Old $\xleftrightarrow[\text{Yes}]{\text{No}}$ New, R:Old $\xleftrightarrow[\text{Yes}]{\text{Yes}}$ New, S:Old $\xleftrightarrow[\text{No}]{\text{No}}$ New, W:Add, Z:Discontinued, F:Interchangeable by set, K:Q'ty Change

Copyright (C) 2015 YANMAR CO., LTD. All RightsReserved.

Fig.91. BUCKET CYLINDER

(A)=SV100-2A C(US)
(B)=
(C)=
(D)=
(E)=
(F)=

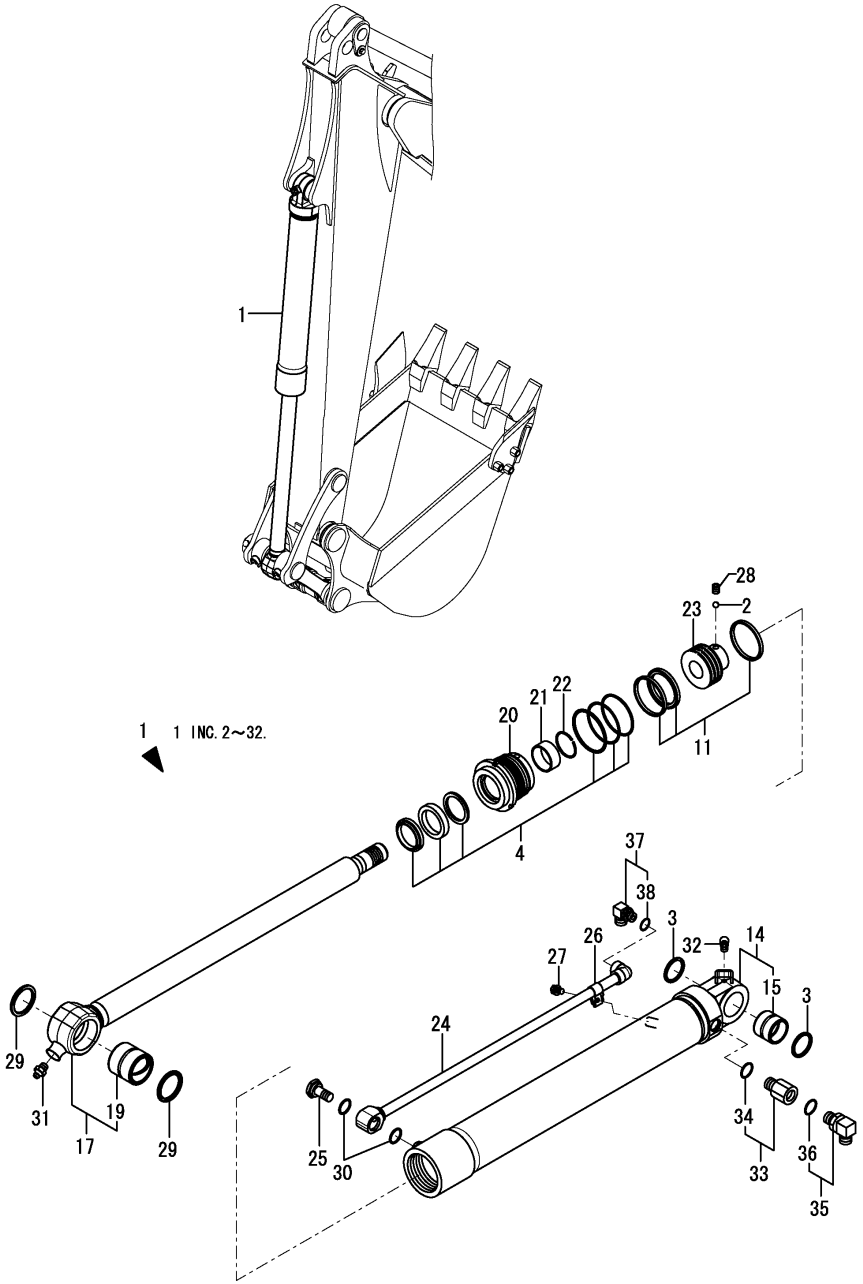

No.	Lev.	Parts No.	Description	Q'ty (A)	(B)	(C)	(D)	(E)	(F)	I	R
1	1	172A69-72500-N	CYLINDER ASSY	1							
2	2	172124-70030	BALL, STEEL	1							
3	2	172162-72040	SEAL, DUST	2							
4	2	172A69-72260	REPAIR KIT, CYLINDER	1							
11	2	172A69-72270	REPAIR KIT, CYLINDER	1							
14	2	172A69-72510-N	TUBE KIT, CYLINDER	1							
15	3	172162-72450	BUSH, PIN	1							
17	2	172A69-72530	ROD KIT, PISTON	1							
19	3	172A69-72650	BUSH, PIN	1							
20	2	172A69-72550	HEAD, CYLINDER	1							
21	2	172A69-72560	BUSH	1							
22	2	172A69-72570	RING,SNAP	1							
23	2	172A69-72620	PISTON	1							
24	2	172A69-72670-N	PIPE ASSY	1							
25	2	172499-72860	PLUG	1							
26	2	172499-72870	HOLDER, PIPE	1							
27	2	172499-72880	BOLT ASSY	1							
28	2	172162-72930	SCREW, SETTING	1							
29	2	172162-72950	SEAL, DUST	2							
30	2	24315-000260	O-RING, 1BP26.0	2							
31	2	24761-020000	NIPPLE, GREASE PT1/8	1							
32	2	24761-050000	NIPPLE, GREASE C	1							
33	1	172A69-72660	CONNECTOR	1							
34	2	41851-000240	O-RING	1							
35	1	172165-76380	CONNECTOR ASSY	1							
36	2	24315-000240	O-RING, 1BP24.0	1							
37	1	172141-76900	CONNECTOR ASSY	1							
38	2	24315-000180	O-RING, 1BP18.0	1							

N:Old $\frac{\text{Yes}}{\text{No}}$ New, Q:Old $\frac{\text{No}}{\text{Yes}}$ New, R:Old $\frac{\text{Yes}}{\text{Yes}}$ New, S:Old $\frac{\text{No}}{\text{No}}$ New, W:Add, Z:Discontinued, F:Interchangeable by set, K:Q'ty Change

Copyright (C) 2015 YANMAR CO., LTD. All RightsReserved.

Fig.92. SWING CYLINDER

(A)=SV100-2A C(US)
(B)=
(C)=
(D)=
(E)=
(F)=

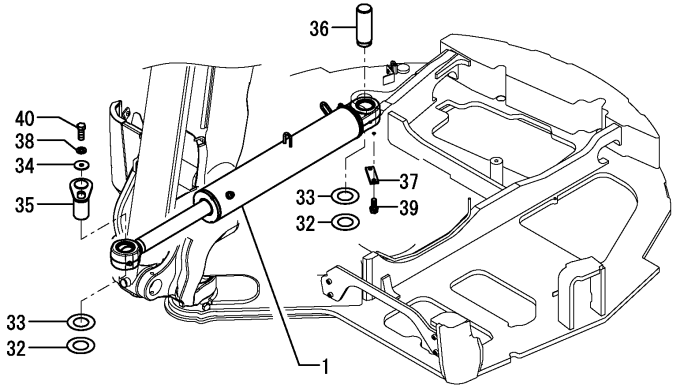

1 1 INC. 2～31.

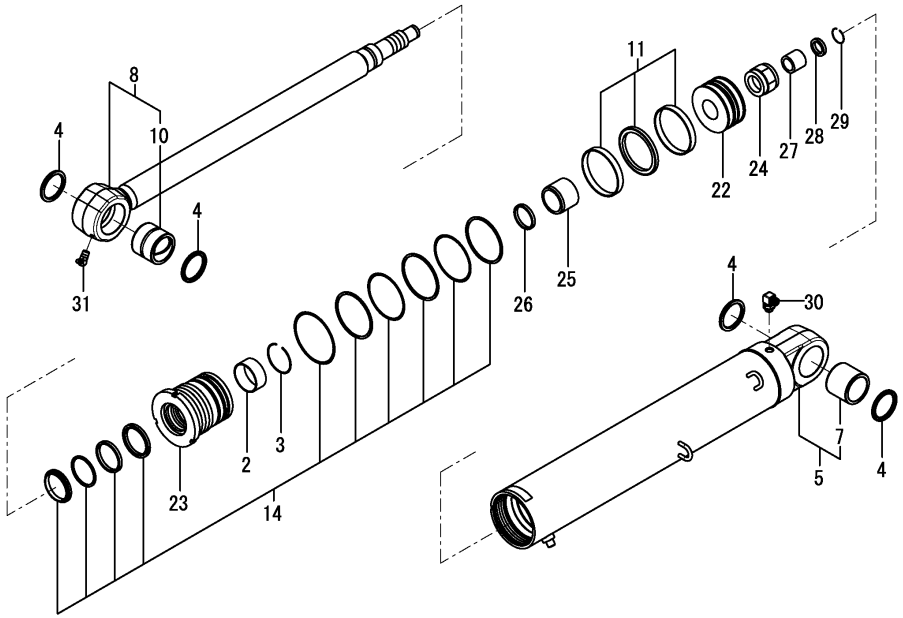

No.	Lev.	Parts No.	Description	Q'ty (A)	(B)	(C)	(D)	(E)	(F)	I	R
1	1	172B11-72700	CYLINDER ASSY, SWING	1							
2	2	172B11-72530	BEARING, SLEEVE	1							
3	2	172B11-72540	RING, RETAINING	1							
4	2	172B11-72550	SEAL, DUST PIN 60	4							
5	2	172B11-72620	REPAIR KIT, TUBE AS	1							
7	3	172B11-71520	BUSH, PIN 60	1							
8	2	172B11-72630	REPAIR KIT, ROD AS	1							
10	3	172B11-71530	BUSH, PIN 60	1							
11	2	172B11-72640	SEAL KIT, PISTON	1							
14	2	172B11-72650	SEAL KIT, HEAD	1							
22	2	172B11-72710	PISTON	1							
23	2	172B11-72720	HEAD	1							
24	2	172B11-72730	NUT, LOCK	1							
25	2	172B11-72740	PLUNGER, CUSHION	1							
26	2	172B11-72750	SEAL, CUSHION	1							
27	2	172B11-72760	PLUNGER, CUSHION	1							
28	2	172B11-72770	RING, PLATE	1							
29	2	172B11-72780	RING, RETAINING	1							
30	2	172B11-72790	ELBOW, G3/8	1							
31	2	24761-050000	NIPPLE, GREASE C	1							
32	1	172175-81700	SHIM	4							
33	1	172175-81710	SHIM	4							
34	1	172187-81970	WASHER	1							
35	1	172187-82370	PIN ASSY	1							
36	1	172A69-82370	PIN	1							
37	1	172162-94280-3	PLATE, LOCK	1							
38	1	22217-140000	WASHER, SPRING 14	1							
39	1	26013-120302	BOLT, SPRING M12X 30	2							
40	1	26116-140352	BOLT, M14X 35 PLATED	1							

N:Old ←Yes/No→ New, Q:Old ←No/Yes→ New, R:Old ←Yes/Yes→ New, S:Old ←No/No→ New, W:Add, Z:Discontinued, F:Interchangeable by set, K:Q'ty Change

Copyright (C) 2015 YANMAR CO., LTD. All RightsReserved.

Fig.93. BLADE CYLINDER(K SPEC.)

(A)=SV100-2A C(US)
(B)=
(C)=
(D)=
(E)=
(F)=

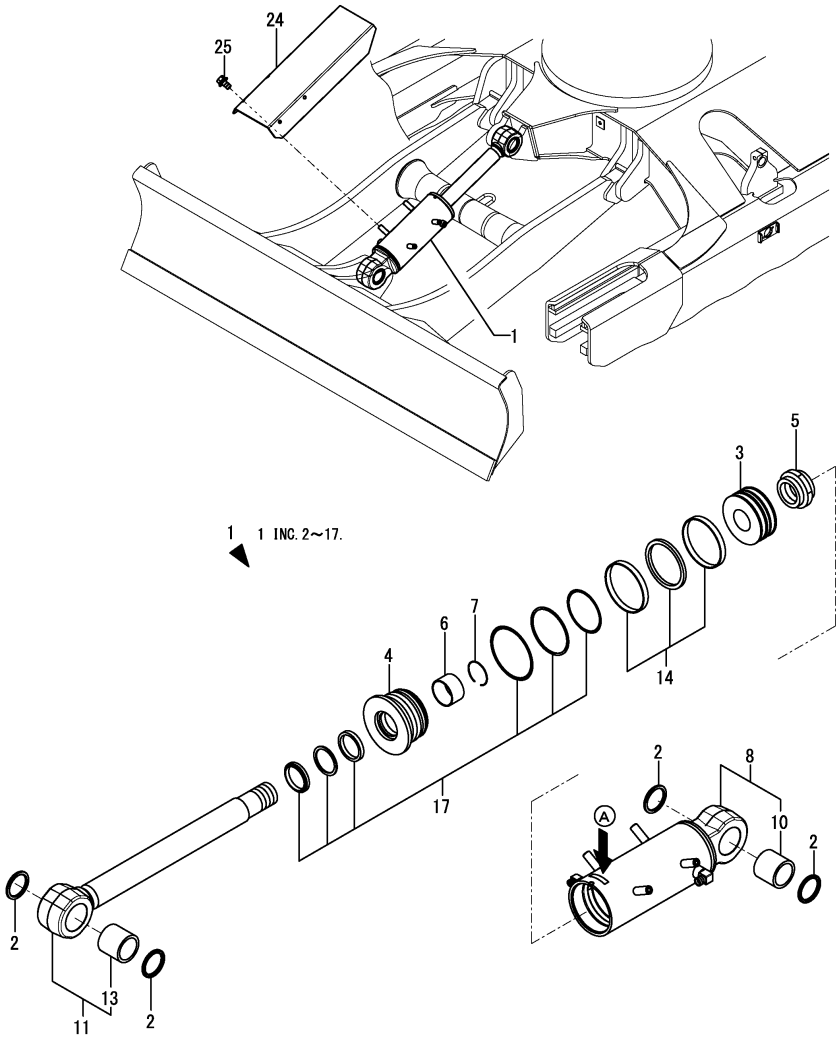

No.	Lev.	Parts No.	Description	Q'ty (A)	(B)	(C)	(D)	(E)	(F)	I	R
1	1	172B11-72800	CYLINDER ASSY, BLADE	1						Z	
	(A=*2016.03)										
2	2	172B11-72550	SEAL, DUST PIN 60	4							
3	2	172B11-72810	PISTON	1							
4	2	172B11-72820	HEAD	1							
5	2	172B11-72830	NUT, LOCK	1							
6	2	172B11-72840	BEARING, SLEEVE	1							
7	2	172B11-72850	RING, RETAINING	1							
8	2	172B11-72860	REPAIR KIT, TUBE AS	1							
10	3	172B11-71720	BUSH, PIN 60	1							
11	2	172B11-72870	REPAIR KIT, ROD AS	1							
13	3	172B11-71720	BUSH, PIN 60	1							
14	2	172B11-72880	SEAL KIT, PISTON	1							
17	2	172B11-72890	SEAL KIT, HEAD	1							
24	1	172A69-72900	COVER ASSY, BLADE	1							
25	1	26014-100202	BOLT, M10X 20	4							

Remarks
* A : There is parts No. & serial No.(K450XXX)
Interchangeable by Fig.180(93A).
The inner parts are not compatible.

N:Old $\xleftrightarrow[\text{No}]{\text{Yes}}$ New, Q:Old $\xleftrightarrow[\text{Yes}]{\text{No}}$ New, R:Old $\xleftrightarrow[\text{Yes}]{\text{Yes}}$ New, S:Old $\xleftrightarrow[\text{No}]{\text{No}}$ New, W:Add, Z:Discontinued, F:Interchangeable by set, K:Q'ty Change

Copyright (C) 2015 YANMAR CO., LTD. All RightsReserved.

Fig.180. (93A)BLADE CYLINDER(J SPEC.)

(A)=SV100-2A C(US) (D)=
(B)= (E)=
(C)= (F)=

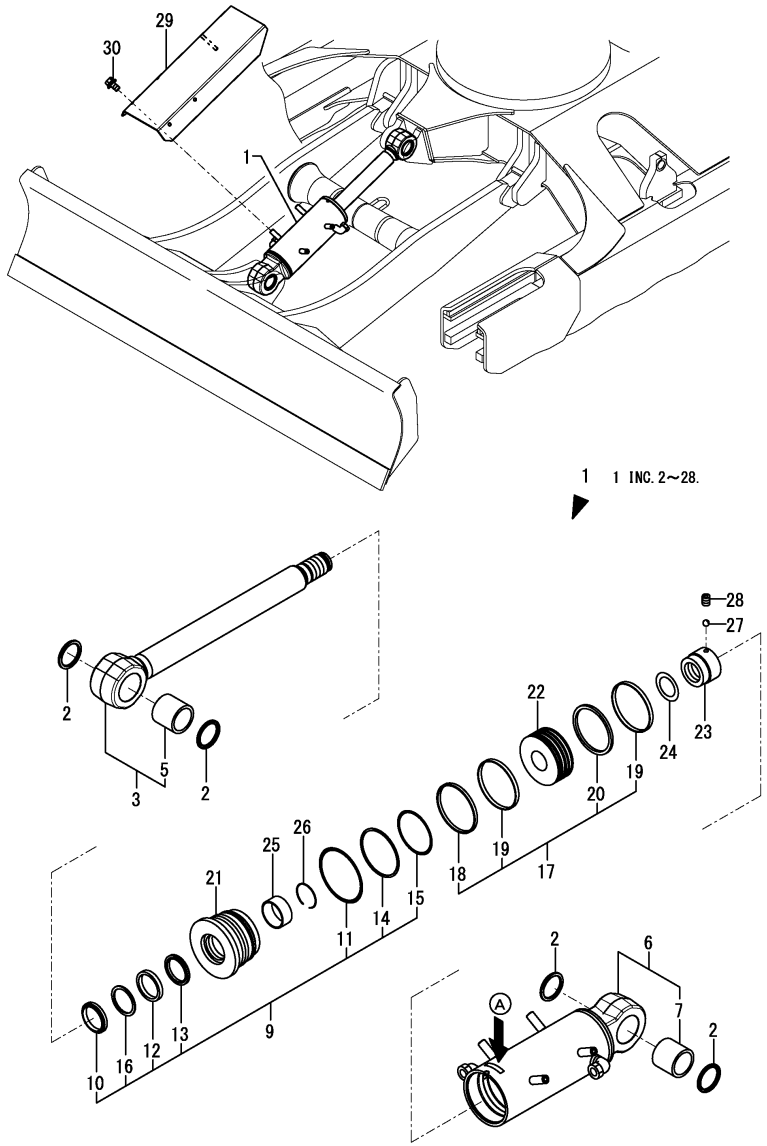

No.	Lev.	Parts No.	Description	Q'ty (A)	(B)	(C)	(D)	(E)	(F)	I	R
1	1	172B11-72801	CYLINDER ASSY, BLADE	1						W	
	(A=*2016.03)										
2	2	172B11-97400	SEAL, DUST PIN 60X75	4							
3	2	172B11-97500	REPAIR KIT, ROD	1							
5	3	172B11-97520	BUSH, PIN 60X75X68	1							
6	2	172B11-97530	REPAIR KIT, TUBE	1							
7	3	172B11-97520	BUSH, PIN 60X75X68	1							
9	2	172B11-97560	SEAL KIT, HEAD130 65	1							
10	3	172B11-97570	SEAL, DUST ROD 65	1							
11	3	172B11-97580	O-RING, NBR HS90	1							
12	3	172B11-97590	SEAL, ROD 65	1							
13	3	172B11-97600	SEAL, BUFFER 65	1							
14	3	172B11-97610	RING, BACK UP	1							
15	3	172B11-97620	O-RING, NBR HS90	1							
16	3	172B11-97630	RING, BACK UP 65	1							
17	2	172B11-97650	SEAL KIT, PISTON 130	1							
18	3	172B11-97660	RING, WEAR 130	1							
19	3	172B11-97670	RING, WEAR 130	2							
20	3	172B11-97680	SEAL, PISTON 130	1							
21	2	172B11-97690	HEAD, CYLINDER130 65	1							
22	2	172B11-97700	PISTON, 130	1							
23	2	172B11-97710	NUT, M52	1							
24	2	172B11-97720	SHIM, 65X52.5X0.5	1							
25	2	172B11-97740	BUSH, 65X70X30	1							
26	2	172B11-97750	RING, RETAINING 65	1							
27	2	24190-080001	BALL, STEEL 1/4	1							
28	2	26979-100122	SCREW, M10X12	1							
29	1	172A69-72900	COVER ASSY, BLADE	1							
30	1	26014-100202	BOLT, M10X 20	4							

Remarks
* A : There is parts No. & serial No.(172B11-72801HXXX)
The inner parts are not compatible.

N:Old ◄Yes/No► New, Q:Old ◄No/Yes► New, R:Old ◄Yes/Yes► New, S:Old ◄No/No► New, W:Add, Z:Discontinued, F:Interchangeable by set, K:Q'ty Change

Copyright (C) 2015 YANMAR CO., LTD. All RightsReserved.

Fig.94. HITCH CYLINDER

(A)=SV100-2A C(US)
(B)=
(C)=
(D)=
(E)=
(F)=

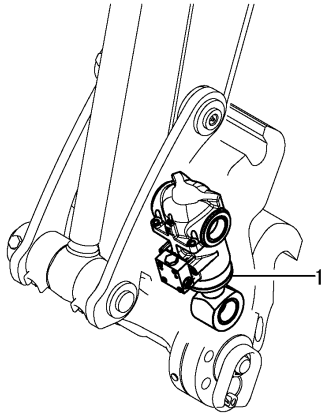

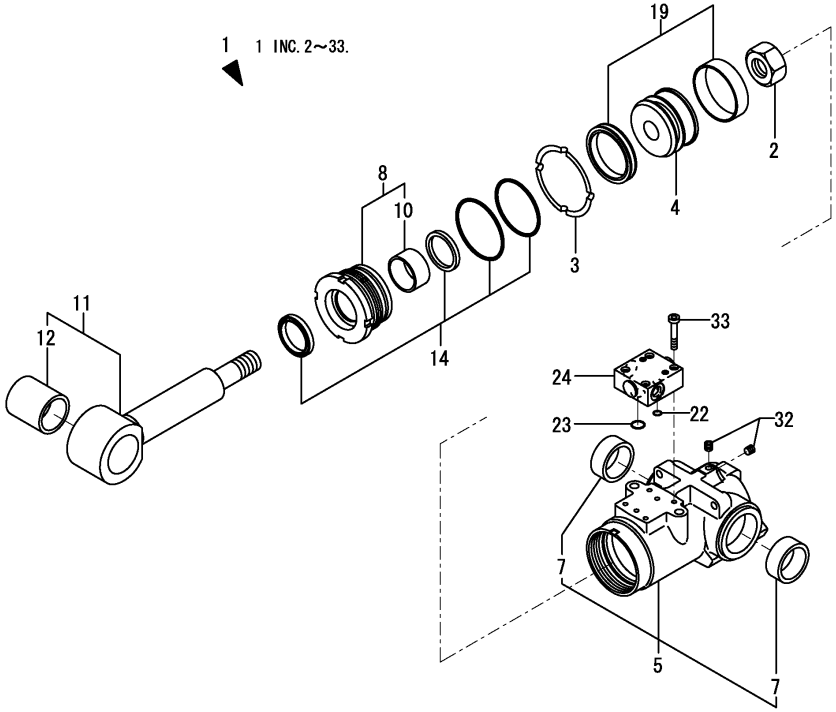

No.	Lev.	Parts No.	Description	Q'ty (A)	(B)	(C)	(D)	(E)	(F)	I	R
1	1	172978-72800-N	CYLINDER, HITCH	1							
2	2	172141-72250	NUT	1							
3	2	172142-72260	WASHER, LOCK	1							
4	2	172175-72480	PISTON 80	1							
5	2	172978-72810-N	TUBE, HITCH	1							
7	3	172978-72890	BUSH 45-55-22	2							
8	2	172978-72860	HEAD 80 45	1							
10	3	24550-045250	BUSH, 45X25	1							
11	2	172978-72880	ROD ASSY,HITCH	1							
12	3	172151-71630	BUSH 45 60	1							
14	2	172978-72920	SEAL SET, HEAD 80X45	1							
19	2	172142-72951	SEAL SET, PISTON	1							
22	2	172958-72950	O-RING	1							
23	2	172958-72960	O-RING	1							
24	2	172958-72983-N	VALVE ASSY,OPERATE	1							
32	2	23871-005000	PLUG, R005	2							
33	2	26450-060302	BOLT, M6X 30	4							

N:Old $\xleftrightarrow[\text{No}]{\text{Yes}}$ New, Q:Old $\xleftrightarrow[\text{Yes}]{\text{No}}$ New, R:Old $\xleftrightarrow[\text{Yes}]{\text{Yes}}$ New, S:Old $\xleftrightarrow[\text{No}]{\text{No}}$ New, W:Add, Z:Discontinued, F:Interchangeable by set, K:Q'ty Change

Copyright (C) 2015 YANMAR CO., LTD. All RightsReserved.

Fig.95. TRAVEL MOTOR

(A)=SV100-2A C(US) (D)=
(B)= (E)=
(C)= (F)=

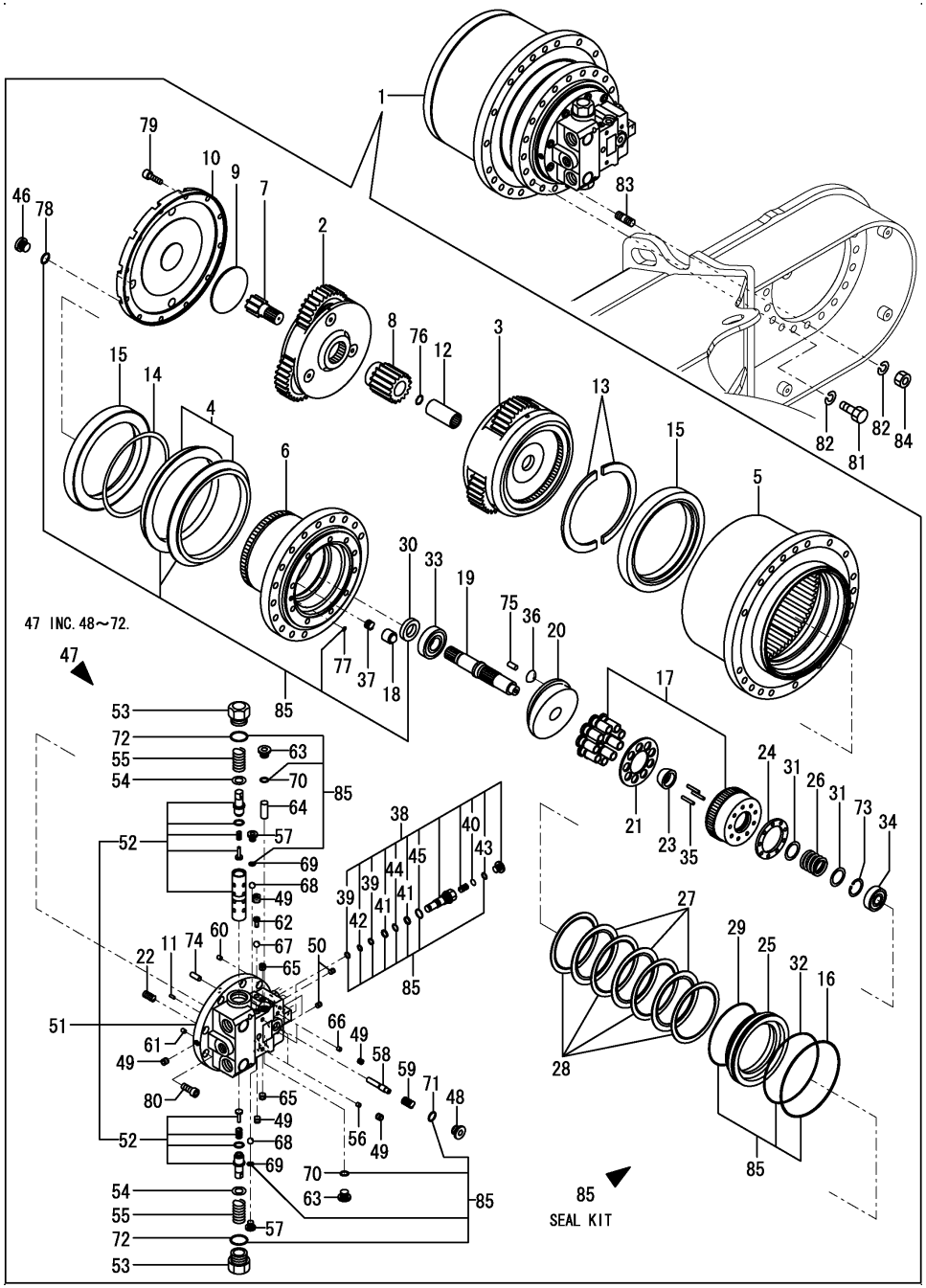

No.	Lev.	Parts No.	Description	Q'ty (A)	(B)	(C)	(D)	(E)	(F)	I	R
1	1	172A69-73300	MOTOR ASSY, TRAVEL	2							
2	2	172A69-73400	CARRIER	2							
3	2	172A69-73410	CARRIER	2							
4	2	172A69-73420	SEAL SET, FLOATING	2							
5	2	172A69-73430	BODY, MOTOR	2							
6	2	172A69-73440	SPINDLE	2							
7	2	172A69-73450	GEAR, SUN	2							
8	2	172A69-73460	GEAR, SUN	2							
9	2	172A69-73470	PLATE, THRUST	2							
10	2	172A69-73480	COVER	2							
11	2	172499-73490	PIN, PARALLEL	2							
12	2	172A69-73490	COUPLING	2							
13	2	172A69-73500	WASHER, LOCK	4							
14	2	172A69-73510	SHIM	2							
15	2	172A69-73520	BEARING, BALL	4							
16	2	172A69-73530	O-RING	2							
17	2	172A69-73540	CYLINDER KIT	2							
18	2	172A69-73550	PISTON ASSY	2							
19	2	172A69-73560	SHAFT	2							
20	2	172A69-73570	PLATE, SWASH	2							
21	2	172A69-73580	PLATE, RETAINER	2							
22	2	172479-73590	SPRING	20							
23	2	172A69-73590	BALL, THRUST	2							
24	2	172A69-73600	PLATE, TIMMING	2							
25	2	172A69-73610	PISTON	2							
26	2	172A69-73620	SPRING	2							
27	2	172A69-73630	PLATE, FRICTION	6							
28	2	172A69-73640	PLATE	8							
29	2	172479-73650	O-RING	2							
30	2	172A69-73650	SEAL, OIL	2							
31	2	172499-73660	WASHER	4							
32	2	172A69-73660	O-RING	2							
33	2	172A69-73670	BEARING	2							
34	2	172A69-73680	BEARING	2							
35	2	172A69-73690	ROLLER	6							
36	2	172A69-73700	PIVOT	4							
37	2	172A69-73710	SPRING	2							
38	2	172A69-73720	VALVE ASSY,RELIEF	4							
39	3	172A69-73730	RING, BUCK UP	8							
40	3	172A69-73740	SHIM	4							
41	3	172479-73930	RING, BUCK UP	8							
42	3	24315-000100	O-RING, 1BP10.0	4							
43	3	24315-000110	O-RING, 1BP11.0	4							
44	3	24315-000140	O-RING, 1BP14.0	4							
45	3	24315-000180	O-RING, 1BP18.0	4							
46	2	172499-73740	PLUG	6							
47	2	172A69-73750	FLANGE ASSY	2							
48	3	172499-73740	PLUG	2							
49	3	172479-73750	PLUG	14							
50	3	172479-73760	PLUG	10							
51	3	172A69-73760	FLANGE KIT	2							

N:Old $\frac{\text{Yes}}{\text{No}}$ New, Q:Old $\frac{\text{No}}{\text{Yes}}$ New, R:Old $\frac{\text{Yes}}{\text{Yes}}$ New, S:Old $\frac{\text{No}}{\text{No}}$ New, W:Add, Z:Discontinued, F:Interchangeable by set, K:Q'ty Change

++ CONTINUE ++

Copyright (C) 2015 YANMAR CO., LTD. All RightsReserved.

Fig.95. TRAVEL MOTOR

(A)=SV100-2A C(US) (D)=
(B)= (E)=
(C)= (F)=

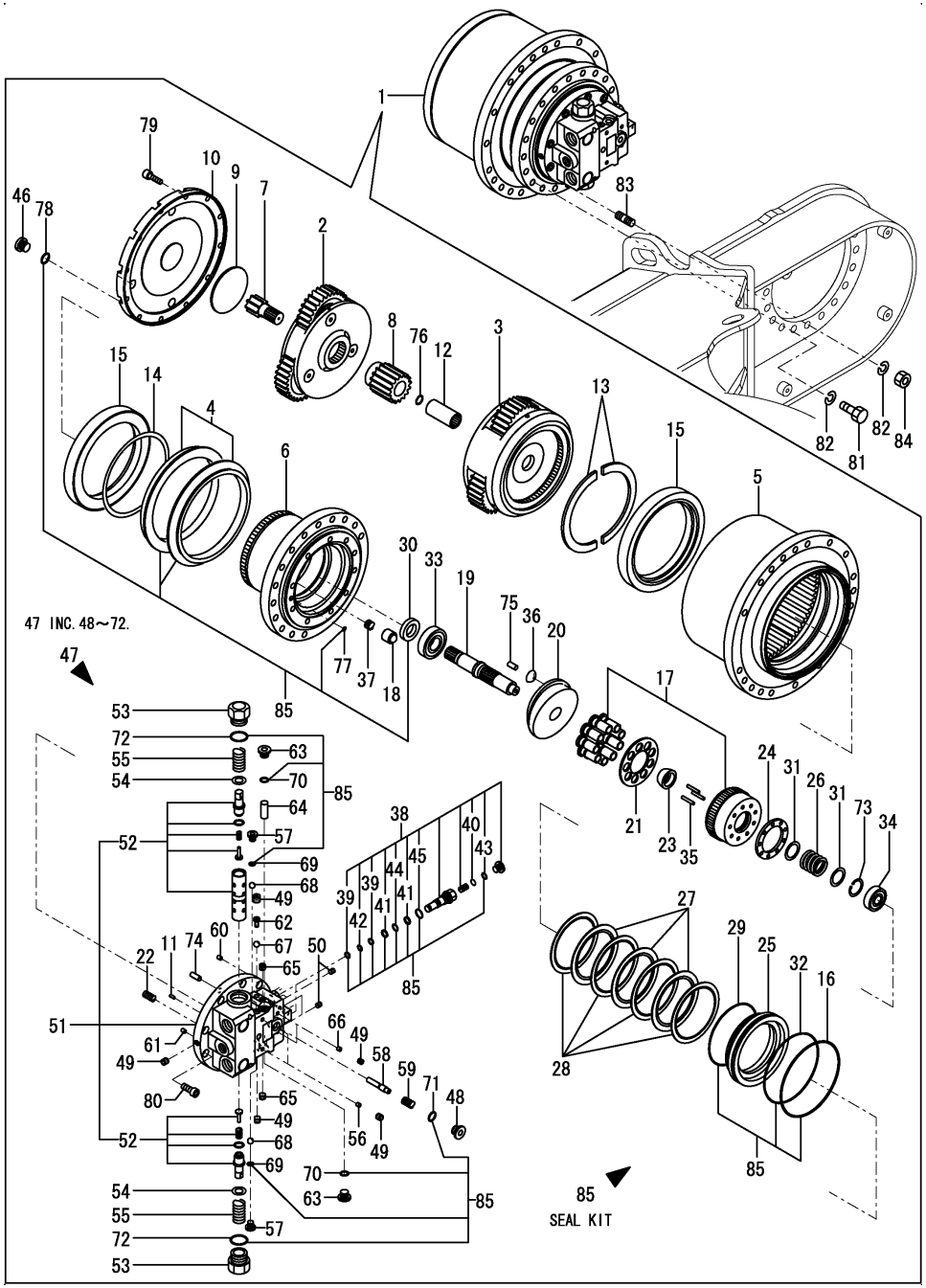

No.	Lev.	Parts No.	Description	Q'ty (A)	(B)	(C)	(D)	(E)	(F)	I	R
52	4	172A69-73770	SPOOL KIT	2							
53	3	172A69-73780	PLUG	4							
54	3	172A69-73790	WASHER	4							
55	3	172A69-73800	SPRING	4							
56	3	172A69-73810	ORIFICE	4							
57	3	172A69-73820	PLUG	4							
58	3	172A69-73830	SPOOL	2							
59	3	172A69-73840	SPRING	2							
60	3	172A69-73850	ORIFICE	2							
61	3	172A69-73860	FILTER	2							
62	3	172A69-73870	PLUG	2							
63	3	172A69-73880	PLUG	4							
64	3	172A69-73890	PISTON	2							
65	3	172A69-73900	PLUG	4							
66	3	172499-73950	ORIFICE	4							
67	3	24190-060001	BALL, STEEL 3/16	2							
68	3	24190-100001	BALL, STEEL 5/16	4							
69	3	24315-000080	O-RING, 1BP8.0	4							
70	3	24315-000140	O-RING, 1BP14.0	4							
71	3	24315-000180	O-RING, 1BP18.0	2							
72	3	24315-000320	O-RING, 1BP32.0	4							
73	2	172499-73780	RING, SNAP	2							
74	2	172499-73850	PIN, PARALLEL	4							
75	2	172499-73850	PIN, PARALLEL	4							
76	2	22252-000220	RING, 22	2							
77	2	24315-000070	O-RING, 1BP7.0	4							
78	2	24315-000180	O-RING, 1BP18.0	6							
79	2	26450-100352	BOLT, M10X 35	24							
80	2	26450-120302	BOLT, M12X 30	20							
81	1	172460-73320	BOLT	38							
82	1	22217-160000	WASHER, SPRING 16	40							
83	1	26216-160452	STUD, M16X 45	2							
84	1	26716-160002	NUT, M16	2							
85	1	172A69-73910	SEAL SET	2							

N:Old $\frac{\text{Yes}}{\text{No}}$ New, Q:Old $\frac{\text{No}}{\text{Yes}}$ New, R:Old $\frac{\text{Yes}}{\text{Yes}}$ New, S:Old $\frac{\text{No}}{\text{No}}$ New, W:Add, Z:Discontinued, F:Interchangeable by set, K:Q'ty Change

Copyright (C) 2015 YANMAR CO., LTD. All RightsReserved.

Fig.96. TURNING MOTOR

(A)=SV100-2A C(US)
(B)=
(C)=
(D)=
(E)=
(F)=

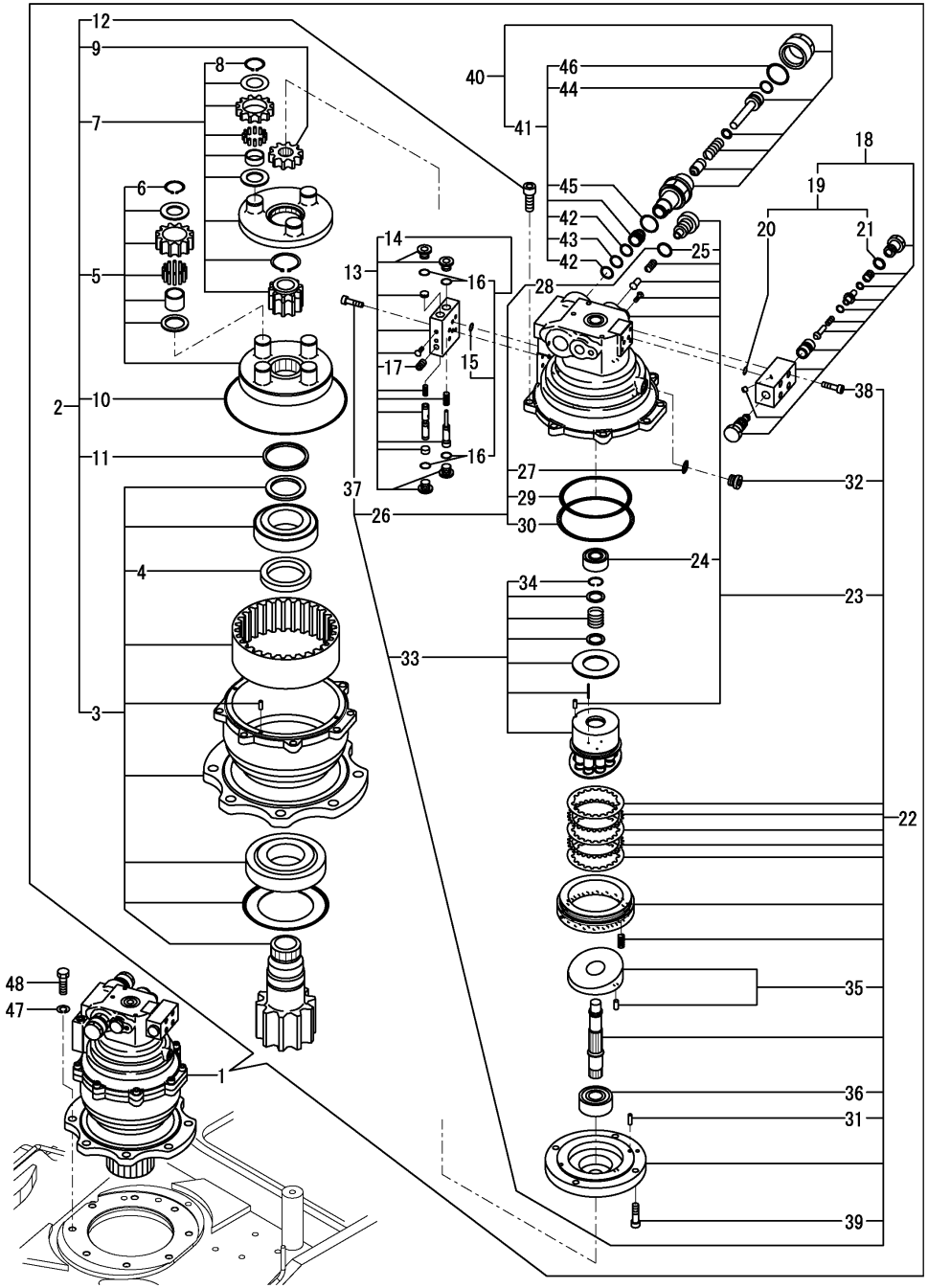

No.	Lev.	Parts No.	Description	Q'ty (A)	(B)	(C)	(D)	(E)	(F)	I	R
1	1	172A69-73031	MOTOR ASSY, SWING	1							
2	2	172A69-73040	GEAR ASSY, REDUCTION	1							
3	3	172A69-70100	PINION KIT	1							
4	4	172A69-71840	SEAL, OIL	1							
5	3	172A69-70110	CARRIER KIT	1							
6	4	172A69-71830	RING, SNAP	4							
7	3	172A69-70120	CARRIER KIT	1							
8	4	172A69-71830	RING, SNAP	3							
9	3	172A69-71800	GEAR	1							
10	3	172A69-71810	O-RING, 270-90	1							
11	3	172A69-71820	RING	1							
12	3	26450-080252	BOLT, M8X 25	8							
13	2	172A69-73070	VALVE ASSY, P/BTIMER	1							
14	3	172A69-70180	SEAL SET, VALVE	1							
15	4	24315-000070	O-RING, 1BP7.0	2							
16	4	24315-000110	O-RING, 1BP11.0	4							
17	3	23871-010000	PLUG, R01	1							
18	2	172A69-73080	VALVE ASSY,	1							
19	3	172A69-70190	SEAL SET, VALVE	1							
20	4	24315-000090	O-RING, 1BP9.0	2							
21	4	24315-000180	O-RING, 1BP18.0	2							
22	2	172A69-73950	MOTOR ASSY	1							
23	3	172A69-70130	BODY KIT,H	1							
24	4	172A69-71850	BEARING, 5204C3	1							
25	4	24315-000180	O-RING, 1BP18.0	2							
26	3	172A69-70160	SEAL SET, MOTOR	1							
27	4	24315-000110	O-RING, 1BP11.0	1							
28	4	24315-000180	O-RING, 1BP18.0	2							
29	4	24325-001300	O-RING, 1BG130.0	1							
30	4	24325-001400	O-RING, 1BG140.0	1							
31	3	172A69-71860	PIN, PARALLEL	3							
32	3	172A69-71870	PLUG, PF1/4	1							
33	3	172A69-73960	BARREL KIT,CYLINDER	1							
34	4	22252-000350	RING, 35	1							
35	3	172A69-73970	PLATE, SWASH	1							
36	3	24512-053054	BEARING, BALL 5305	1							
37	3	26450-060162	BOLT, M6X 16	4							
38	3	26450-060202	BOLT, M6X 20	4							
39	3	26450-100352	BOLT, M10X 35	14							
40	2	172A69-73980	VALVE ASSY, RELIEF	2							
41	3	172A69-70170	SEAL SET, RELIEF	2							
42	4	172A69-71880	RING, BACK UP	4							
43	4	24315-000160	O-RING, 1BP16.0	2							
44	4	24315-000180	O-RING, 1BP18.0	2							
45	4	24315-000250	O-RING, 1BP25.0	2							
46	4	24315-000300	O-RING, 1BP30.0	2							
47	1	22217-160000	WASHER, SPRING 16	8							
48	1	26076-160502	BOLT, 10.916X 50	8							

N:Old $\xleftarrow[\text{No}]{\text{Yes}}$ New, Q:Old $\xleftarrow[\text{Yes}]{\text{No}}$ New, R:Old $\xleftrightarrow[\text{Yes}]{\text{Yes}}$ New, S:Old $\xleftrightarrow[\text{No}]{\text{No}}$ New, W:Add, Z:Discontinued, F:Interchangeable by set, K:Q'ty Change

Copyright (C) 2015 YANMAR CO., LTD. All RightsReserved.

Fig.97. ACCUMULATOR

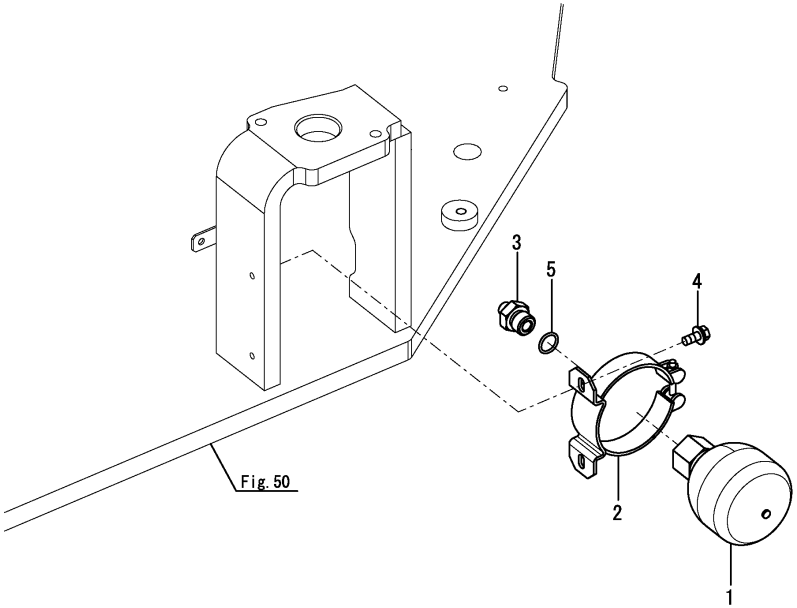

(A)=SV100-2A C(US)
(B)=
(C)=
(D)=
(E)=
(F)=

No.	Lev.	Parts No.	Description	Q'ty (A)	(B)	(C)	(D)	(E)	(F)	I	R
1	1	172B11-73600	ACCUMULATOR	1							
2	1	172B11-73630	CLAMP	1							
3	1	172423-76120	CONNECTOR, PF1/2X1/4	1							
4	1	26014-080202	BOLT, M8X 20	2							
5	1	41851-000180	O-RING	1							

N:Old $\xleftrightarrow[\text{No}]{\text{Yes}}$ New, Q:Old $\xleftrightarrow[\text{Yes}]{\text{No}}$ New, R:Old $\xleftrightarrow[\text{Yes}]{\text{Yes}}$ New, S:Old $\xleftrightarrow[\text{No}]{\text{No}}$ New, W:Add, Z:Discontinued, F:Interchangeable by set, K:Q'ty Change

Copyright (C) 2015 YANMAR CO., LTD. All RightsReserved.

Fig.98. LINE FILTER

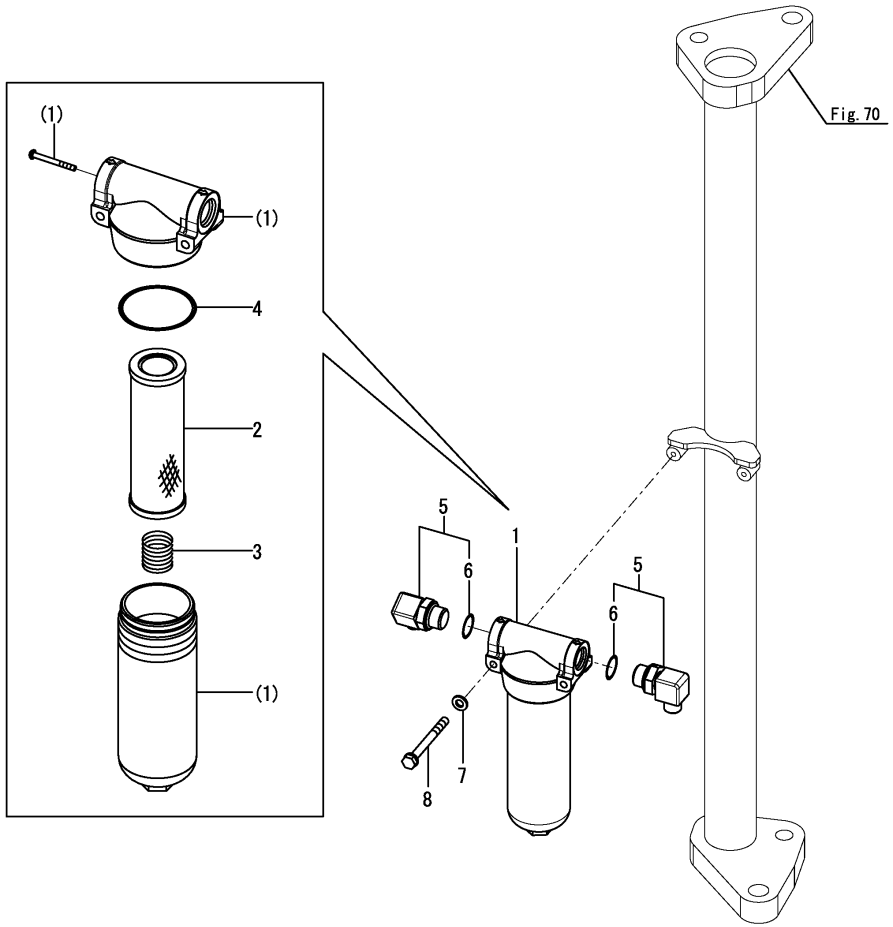

(A)=SV100-2A C(US)
(B)=
(C)=
(D)=
(E)=
(F)=

No.	Lev.	Parts No.	Description	Q'ty (A)	(B)	(C)	(D)	(E)	(F)	I	R
1	1	172B11-73750	FILTER ASSY, LINE	1							
2	2	172B11-73760	ELEMENT	1							
3	2	172B11-73770	SPRING	1							
4	2	172B11-73780	O-RING, JASO 2053 90	1							
5	1	172157-76300	ELBOW ASSY	2							
6	2	24315-000180	O-RING, 1BP18.0	2							
7	1	22137-060000	WASHER, 6	2							
8	1	26013-060602	BOLT, M6X 60	2							

N:Old $\xleftrightarrow[\text{No}]{\text{Yes}}$ New, Q:Old $\xleftrightarrow[\text{Yes}]{\text{No}}$ New, R:Old $\xleftrightarrow[\text{Yes}]{\text{Yes}}$ New, S:Old $\xleftrightarrow[\text{No}]{\text{No}}$ New, W:Add, Z:Discontinued, F:Interchangeable by set, K:Q'ty Change

Copyright (C) 2015 YANMAR CO., LTD. All RightsReserved.

Fig.99. SWIVEL JOINT

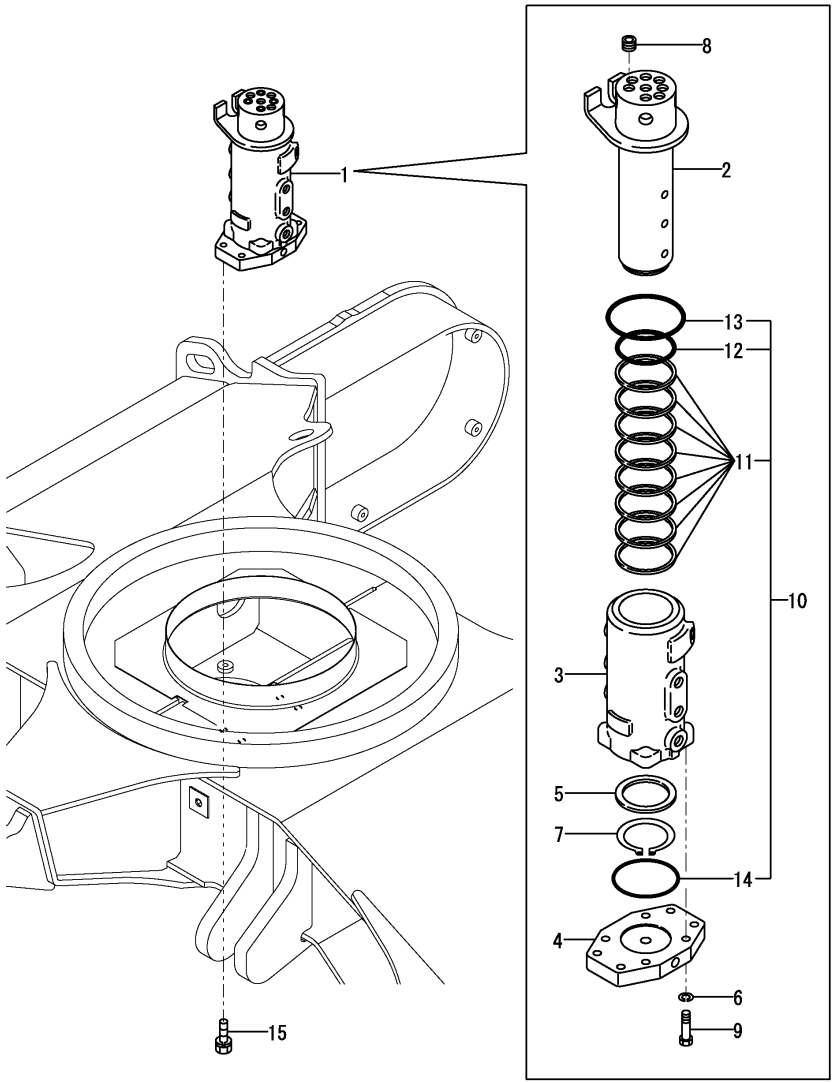

(A)=SV100-2A C(US)
(B)=
(C)=
(D)=
(E)=
(F)=

No.	Lev.	Parts No.	Description	Q'ty (A)	(B)	(C)	(D)	(E)	(F)	I	R
1	1	172A65-73800	JOINT ASSY, SWIVEL	1							
2	2	172A65-73810	SHAFT ASSY	1							
3	2	172A65-73840	ROTOR	1							
4	2	172A65-73850	FLANGE	1							
5	2	172A65-73860	SPACER	1							
6	2	22217-100000	WASHER, SPRING 10	4							
7	2	22242-000720	RING, 72	1							
8	2	23871-030000	PLUG, R03	4							
9	2	26076-100402	BOLT, 10.910X 40	4							
10	2	172A65-73880	SEAL KIT	1							
11	3	172A65-73870	SEAL	8							
12	3	24315-000800	O-RING, 1BP80.0	1							
13	3	24315-001000	O-RING, 1BP100.0	1							
14	3	24325-000950	O-RING, 1BG95.0	1							
15	1	26013-120402	BOLT, SPRING M12X 40	4							

N:Old $\frac{\text{Yes}}{\text{No}}$ New, Q:Old $\frac{\text{No}}{\text{Yes}}$ New, R:Old $\frac{\text{Yes}}{\text{Yes}}$ New, S:Old $\frac{\text{No}}{\text{No}}$ New, W:Add, Z:Discontinued, F:Interchangeable by set, K:Q'ty Change

Copyright (C) 2015 YANMAR CO., LTD. All RightsReserved.

Fig.100. CONTROL VALVE(A-TYPE)(1/9)(TO M20900)

(A)=SV100-2A C(US)
(B)=
(C)=
(D)=
(E)=
(F)=

CONTROL VALVE ASSY
Fig. 100 Ref. No. 1
INC. Fig. 101～108.

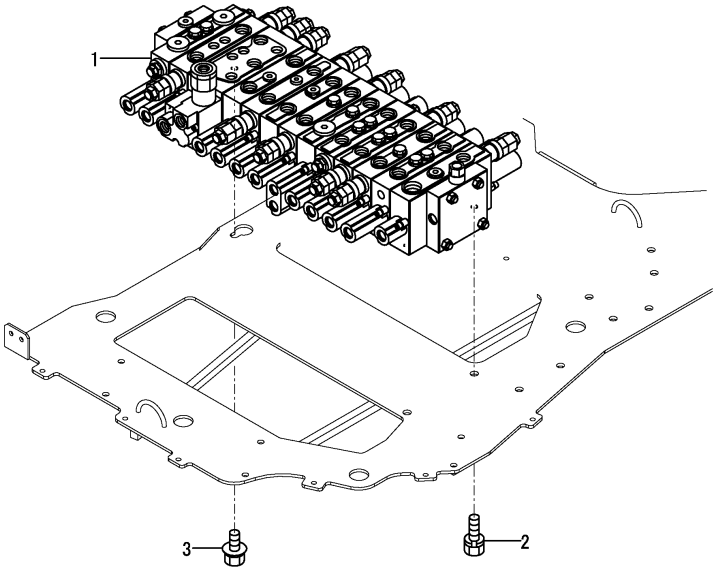

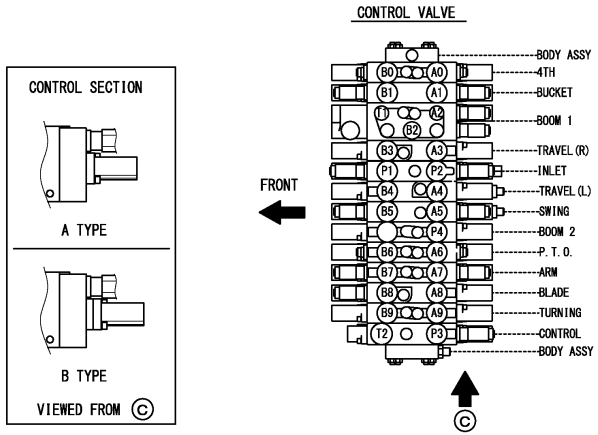

No.	Lev.	Parts No.	Description	Q'ty (A)	(B)	(C)	(D)	(E)	(F)	I	R
1	1	172B12-74100	VALVE ASSY, CONTROL	1							1
2	1	26013-100162	BOLT, SPRING M10X 16	2							
3	1	26106-100122	BOLT, M10X 12 PLATED	1							

Remarks
* B-type is shown in Fig.171(108A).
(1)Inner parts are shown in Fig.108 from Fig.101.

N:Old ←Yes/No→ New, Q:Old ←No/Yes→ New, R:Old ←Yes/Yes→ New, S:Old ←No/No→ New, W:Add, Z:Discontinued, F:Interchangeable by set, K:Q'ty Change

Copyright (C) 2015 YANMAR CO., LTD. All RightsReserved.

Fig.101. CONTROL VALVE(A-TYPE)(2/9)(TO M20900)

(A)=SV100-2A C(US)
(B)=
(C)=
(D)=
(E)=
(F)=

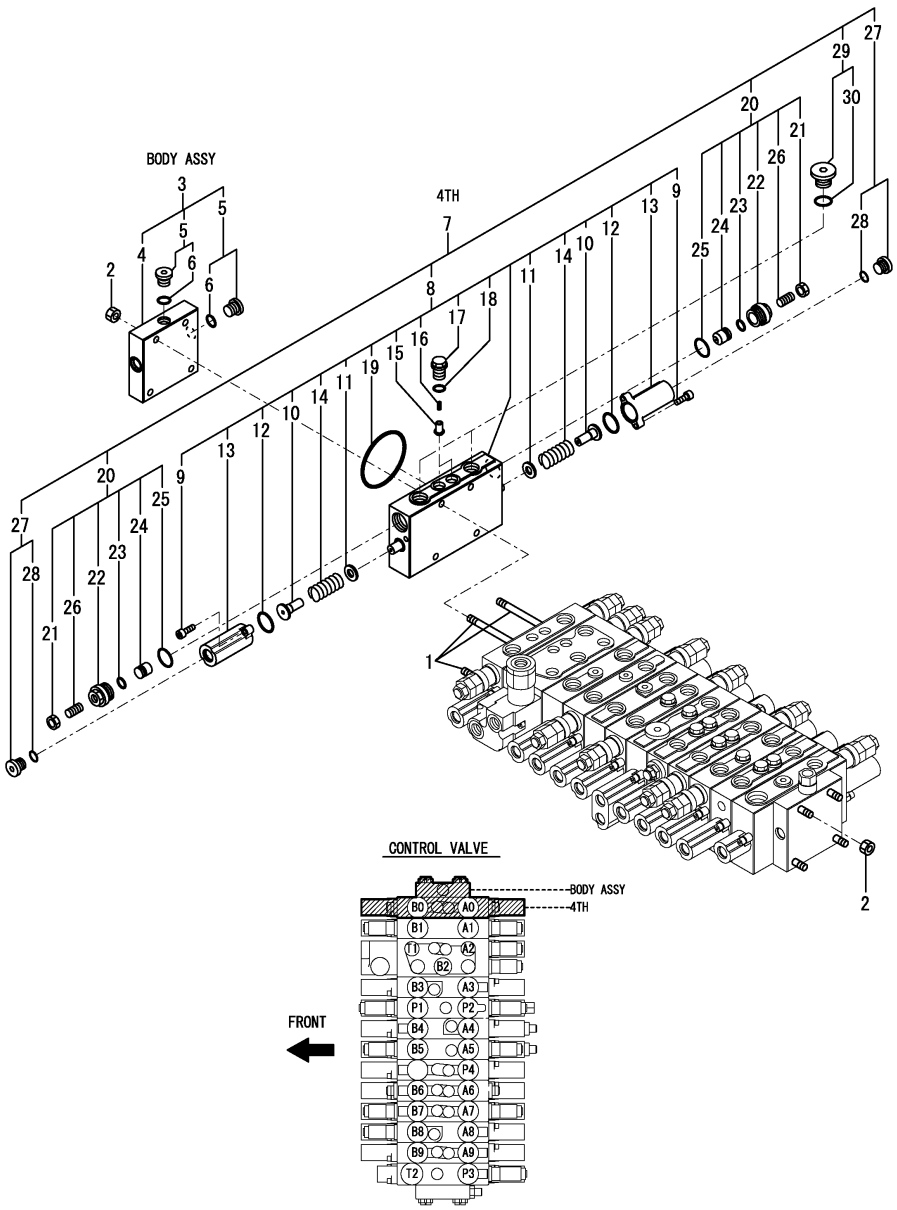

No.	Lev.	Parts No.	Description	Q'ty (A)	(B)	(C)	(D)	(E)	(F)	I	R
1	2	172A69-71260	ROD, TIE	4							
2	2	172422-74110	NUT	8							
3	2	172A69-74110	BODY ASSY	1							
4	3	172478-74360	BODY	1							
5	3	172187-74530	PLUG ASSY	2							
6	4	24315-000110	O-RING, 1BP11.0	2							
7	2	172A69-74170	SECTION ASSY, 4TH	1							
8	3	172A69-74180	SECTION, 4TH	1							
9	4	172151-74060	BOLT, SOCKET HEAD	4							
10	4	172478-74180	SEAT, SPRING	2							
11	4	172175-74220	SEAT, SPRING	2							
12	4	172151-74320	O-RING	2							
13	4	172455-74390	CAP	2							
14	4	172455-74410	SPRING	2							
15	4	172455-74420	POPPET	2							
16	4	172455-74440	SPRING	2							
17	4	172455-74450	PLUG	2							
18	4	172455-74460	O-RING	2							
19	4	24321-000700	O-RING, 1AG70.0	1							
20	3	172455-74320	VALVE ASSY, SHUT-OFF	2							
21	4	172455-74010	NUT, SHOE	2							
22	4	172455-74020	PLUG	2							
23	4	172455-74030	O-RING	2							
24	4	172455-74040	POPPET	2							
25	4	172116-74150	O-RING	2							
26	4	172455-74990	SCREW, SETTING	2							
27	3	172187-74530	PLUG ASSY	2							
28	4	24315-000110	O-RING, 1BP11.0	2							
29	3	172187-74550	PLUG ASSY	2							
30	4	24315-000180	O-RING, 1BP18.0	2							

Remarks
* Control valve assy is shown in Fig.100.

N:Old $\frac{\text{Yes}}{\text{No}}$ New, Q:Old $\frac{\text{No}}{\text{Yes}}$ New, R:Old $\frac{\text{Yes}}{\text{Yes}}$ New, S:Old $\frac{\text{No}}{\text{No}}$ New, W:Add, Z:Discontinued, F:Interchangeable by set, K:Q'ty Change

Copyright (C) 2015 YANMAR CO., LTD. All RightsReserved.

Fig.102. CONTROL VALVE(A-TYPE)(3/9)(TO M20900)

(A)=SV100-2A C(US)
(B)=
(C)=
(D)=
(E)=
(F)=

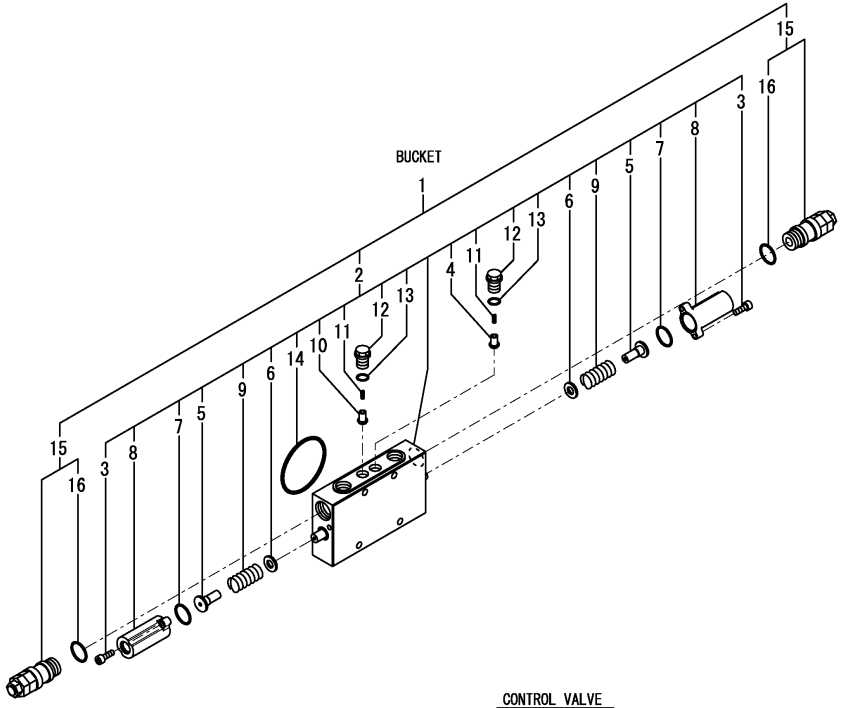

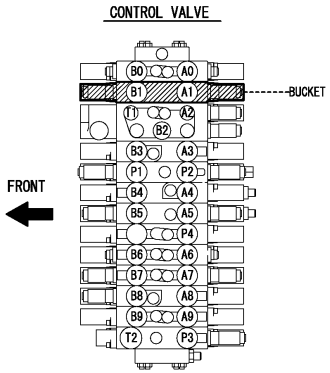

No.	Lev.	Parts No.	Description	Q'ty (A)	(B)	(C)	(D)	(E)	(F)	I	R
1	2	172A69-74191	SECTION ASSY, BACKET	1							
2	3	172A89-74161	SECTION, BUCKET	1							
3	4	172151-74060	BOLT, SOCKET HEAD	4							
4	4	172478-74170	POPPET	1							
5	4	172478-74180	SEAT, SPRING	2							
6	4	172175-74220	SEAT, SPRING	2							
7	4	172151-74320	O-RING	2							
8	4	172455-74390	CAP	2							
9	4	172455-74410	SPRING	2							
10	4	172455-74420	POPPET	1							
11	4	172455-74440	SPRING	2							
12	4	172455-74450	PLUG	2							
13	4	172455-74460	O-RING	2							
14	4	24321-000700	O-RING, 1AG70.0	1							
15	3	172A69-74200	VALVE, RELIEF	2							
16	4	172116-74150	O-RING	2							

Remarks
* Control valve assy is shown in Fig.100.

N:Old $\overset{\text{Yes}}{\underset{\text{No}}{\leftrightarrow}}$ New, Q:Old $\overset{\text{No}}{\underset{\text{Yes}}{\leftrightarrow}}$ New, R:Old $\overset{\text{Yes}}{\underset{\text{Yes}}{\leftrightarrow}}$ New, S:Old $\overset{\text{No}}{\underset{\text{No}}{\leftrightarrow}}$ New, W:Add, Z:Discontinued, F:Interchangeable by set, K:Q'ty Change

Copyright (C) 2015 YANMAR CO., LTD. All RightsReserved.

Fig.103. CONTROL VALVE(A-TYPE)(4/9)(TO M20900)

(A)=SV100-2A C(US)
(B)=
(C)=
(D)=
(E)=
(F)=

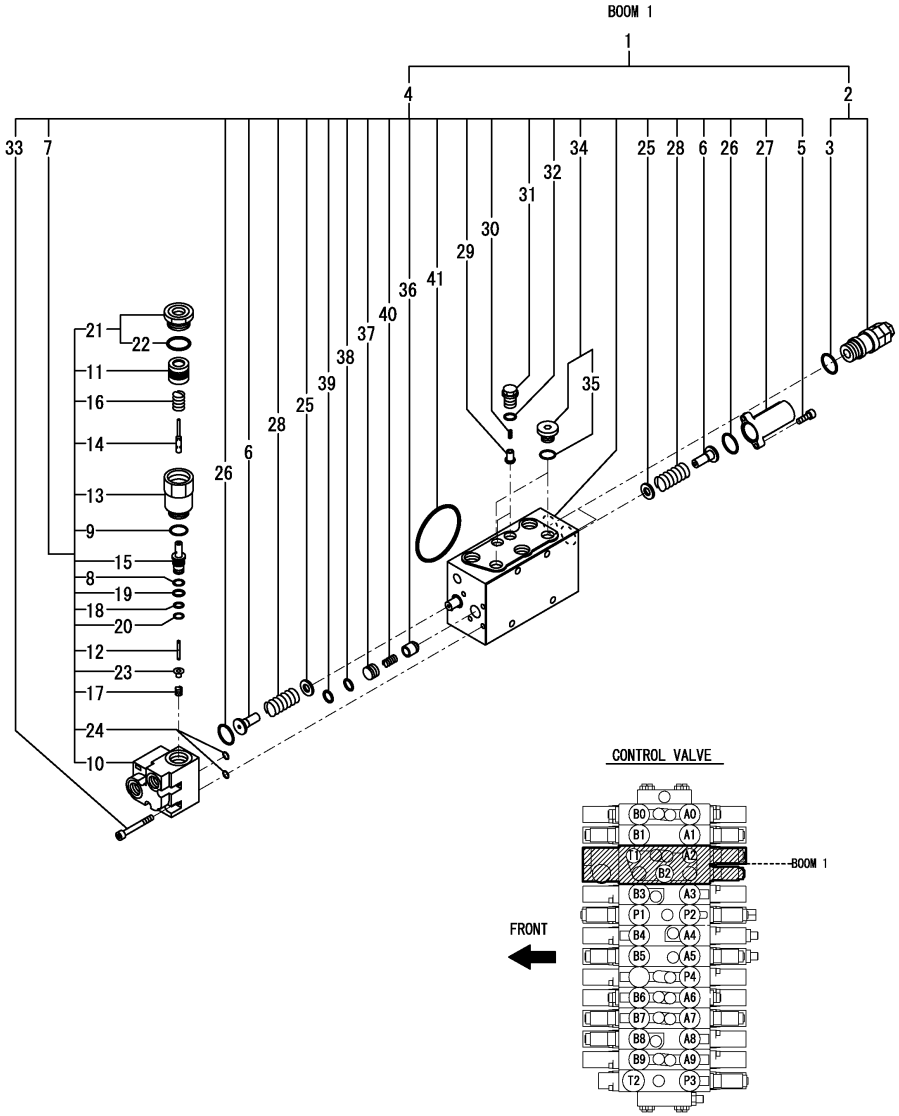

No.	Lev.	Parts No.	Description	Q'ty (A)	(B)	(C)	(D)	(E)	(F)	I	R
1	2	172A69-74220	SECTION ASSY, BOOM	1							
2	3	172A69-74200	VALVE, RELIEF	2							
3	4	172116-74150	O-RING	2							
4	3	172A69-74230	SECTION, BOOM	1							
5	4	172151-74060	BOLT, SOCKET HEAD	2							
6	4	172478-74180	SEAT, SPRING	2							
7	4	172488-74200	VALVE ASSY	1							
8	5	172638-73650	RING, BUCK UP	1							
9	5	172116-74150	O-RING	1							
10	5	172488-74210	BODY	1							
11	5	172488-74220	PISTON	1							
12	5	172455-74590	POPPET	1							
13	5	172455-74600	PLUG	1							
14	5	172455-74620	SPOOL	1							
15	5	172455-74630	SLEEVE	1							
16	5	172455-74640	SPRING	1							
17	5	172455-74650	SPRING	1							
18	5	172455-74660	O-RING	1							
19	5	172455-74670	O-RING	1							
20	5	172455-74680	RING, BUCK UP	1							
21	5	172187-74690	PLUG ASSY	1							
22	6	172312-74770	O-RING	1							
23	5	172455-74720	SEAT, SPRING	1							
24	5	24315-000070	O-RING, 1BP7.0	2							
25	4	172175-74220	SEAT, SPRING	2							
26	4	172151-74320	O-RING	2							
27	4	172455-74390	CAP	1							
28	4	172455-74410	SPRING	2							
29	4	172455-74420	POPPET	2							
30	4	172455-74440	SPRING	2							
31	4	172455-74450	PLUG	2							
32	4	172455-74460	O-RING	2							
33	4	172455-74530	BOLT,SOCKET HEAD	5							
34	4	172187-74540	PLUG ASSY	2							
35	5	24315-000140	O-RING, 1BP14.0	2							
36	4	172455-74550	POPPET	1							
37	4	172455-74560	SPACER	1							
38	4	172455-74570	O-RING	1							
39	4	172455-74580	RING, BUCK UP	1							
40	4	172187-74630	SPRING	1							
41	4	24321-000700	O-RING, 1AG70.0	1							

Remarks
* Control valve assy is shown in Fig.100.

N:Old $\xleftarrow[\text{No}]{\text{Yes}}$ New, Q:Old $\xleftarrow[\text{Yes}]{\text{No}}$ New, R:Old $\xleftrightarrow[\text{Yes}]{\text{Yes}}$ New, S:Old $\xleftrightarrow[\text{No}]{\text{No}}$ New, W:Add, Z:Discontinued, F:Interchangeable by set, K:Q'ty Change

Copyright (C) 2015 YANMAR CO., LTD. All RightsReserved.

Fig.104. CONTROL VALVE(A-TYPE)(5/9)(TO M20900)

(A)=SV100-2A C(US)
(B)=
(C)=
(D)=
(E)=
(F)=

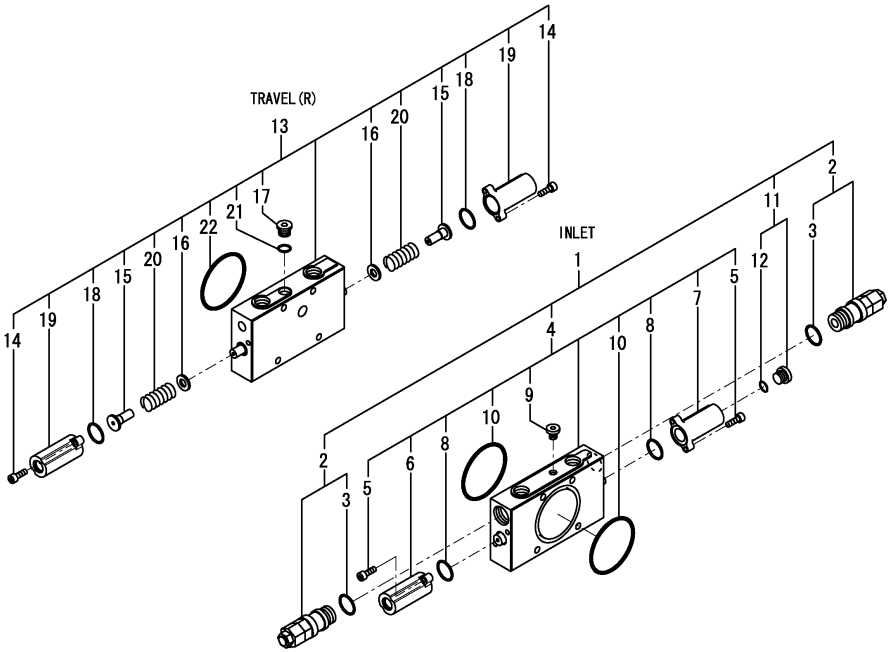

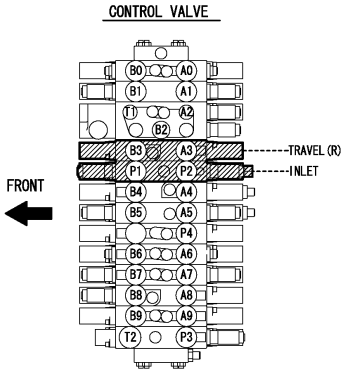

No.	Lev.	Parts No.	Description	Q'ty (A)	(B)	(C)	(D)	(E)	(F)	I	R
1	2	172A69-74120	INLET SECTION ASSY	1							
2	3	172A69-74130	VALVE, RELIEF	2							
3	4	172116-74150	O-RING	2							
4	3	172A69-74140	SECTION, INLET	1							
5	4	172151-74060	BOLT, SOCKET HEAD	4							
6	4	172A69-74150	CAP ASSY	1							
7	4	172A69-74160	CAP	1							
8	4	172151-74320	O-RING	2							
9	4	172422-74330	PLUG ASSY	1							
10	4	24321-000700	O-RING, 1AG70.0	2							
11	3	172187-74530	PLUG ASSY	1							
12	4	24315-000110	O-RING, 1BP11.0	1							
13	2	172A69-74240	SECTION, TRAVEL	1							
14	3	172151-74060	BOLT, SOCKET HEAD	4							
15	3	172478-74180	SEAT, SPRING	2							
16	3	172175-74220	SEAT, SPRING	2							
17	3	172A69-74250	PLUG	1							
18	3	172151-74320	O-RING	2							
19	3	172455-74390	CAP	2							
20	3	172455-74410	SPRING	2							
21	3	172455-74460	O-RING	1							
22	3	24321-000700	O-RING, 1AG70.0	1							

Remarks
* Control valve assy is shown in Fig.100.

N:Old $\overset{\text{Yes}}{\underset{\text{No}}{\leftrightarrow}}$ New, Q:Old $\overset{\text{No}}{\underset{\text{Yes}}{\leftrightarrow}}$ New, R:Old $\overset{\text{Yes}}{\underset{\text{Yes}}{\leftrightarrow}}$ New, S:Old $\overset{\text{No}}{\underset{\text{No}}{\leftrightarrow}}$ New, W:Add, Z:Discontinued, F:Interchangeable by set, K:Q'ty Change

Copyright (C) 2015 YANMAR CO., LTD. All RightsReserved.

Fig.105. CONTROL VALVE(A-TYPE)(6/9)(TO M20900)

(A)=SV100-2A C(US)
(B)=
(C)=
(D)=
(E)=
(F)=

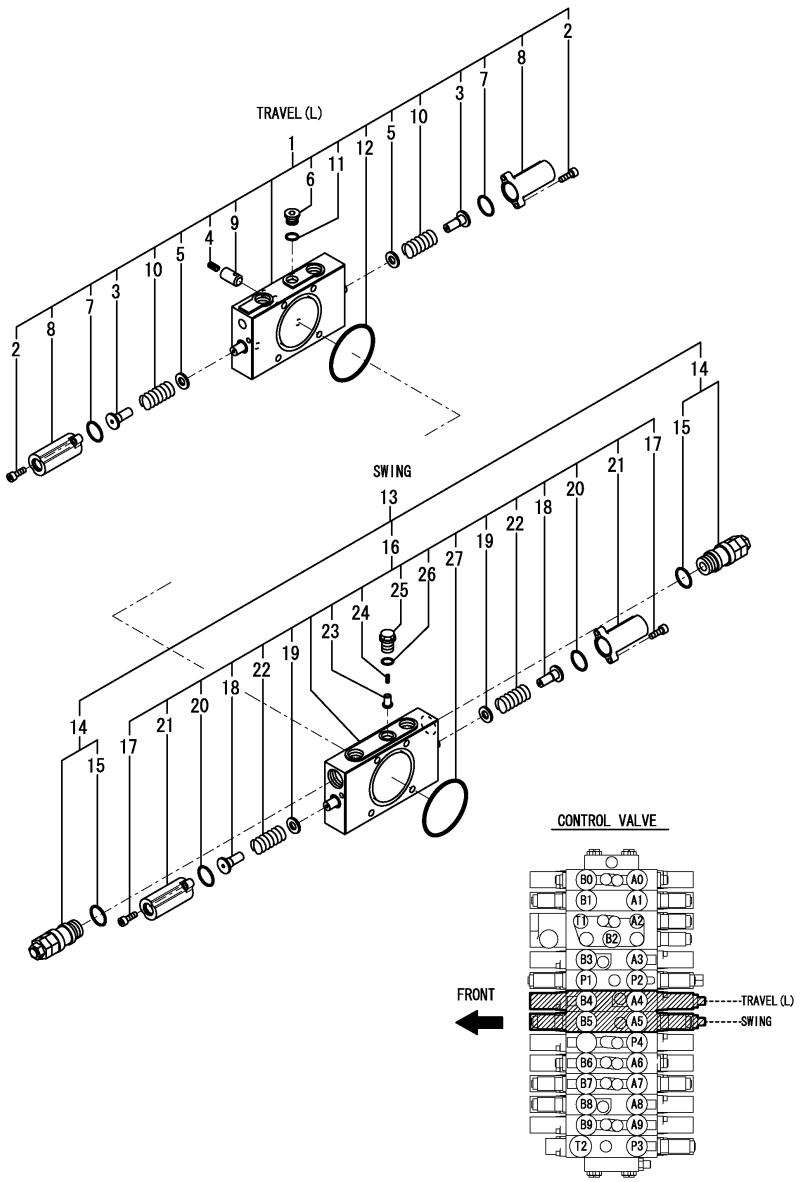

No.	Lev.	Parts No.	Description	Q'ty (A)	(B)	(C)	(D)	(E)	(F)	I	R
1	2	172A69-74260	SECTION, TRAVEL	1							
2	3	172151-74060	BOLT, SOCKET HEAD	4							
3	3	172478-74180	SEAT, SPRING	2							
4	3	172113-74190	SPRING	1							
5	3	172175-74220	SEAT, SPRING	2							
6	3	172A69-74250	PLUG	1							
7	3	172151-74320	O-RING	2							
8	3	172455-74390	CAP	2							
9	3	172187-74410	POPPET	1							
10	3	172455-74410	SPRING	2							
11	3	172455-74460	O-RING	1							
12	3	24321-000700	O-RING, 1AG70.0	1							
13	2	172A69-74270	SECTION ASSY, SWING	1							
14	3	172A69-74200	VALVE, RELIEF	2							
15	4	172116-74150	O-RING	2							
16	3	172A69-74280	SECTION, SWING	1							
17	4	172151-74060	BOLT, SOCKET HEAD	4							
18	4	172478-74180	SEAT, SPRING	2							
19	4	172175-74220	SEAT, SPRING	2							
20	4	172151-74320	O-RING	2							
21	4	172455-74390	CAP	2							
22	4	172455-74410	SPRING	2							
23	4	172455-74420	POPPET	1							
24	4	172455-74440	SPRING	1							
25	4	172455-74450	PLUG	1							
26	4	172455-74460	O-RING	1							
27	4	24321-000700	O-RING, 1AG70.0	1							

Remarks
* Control valve assy is shown in Fig.100.

N:Old $\overset{\text{Yes}}{\underset{\text{No}}{\leftrightarrow}}$ New, Q:Old $\overset{\text{No}}{\underset{\text{Yes}}{\leftrightarrow}}$ New, R:Old $\overset{\text{Yes}}{\underset{\text{Yes}}{\leftrightarrow}}$ New, S:Old $\overset{\text{No}}{\underset{\text{No}}{\leftrightarrow}}$ New, W:Add, Z:Discontinued, F:Interchangeable by set, K:Q'ty Change

Copyright (C) 2015 YANMAR CO., LTD. All RightsReserved.

Fig.106. CONTROL VALVE(A-TYPE)(7/9)(TO M20900)

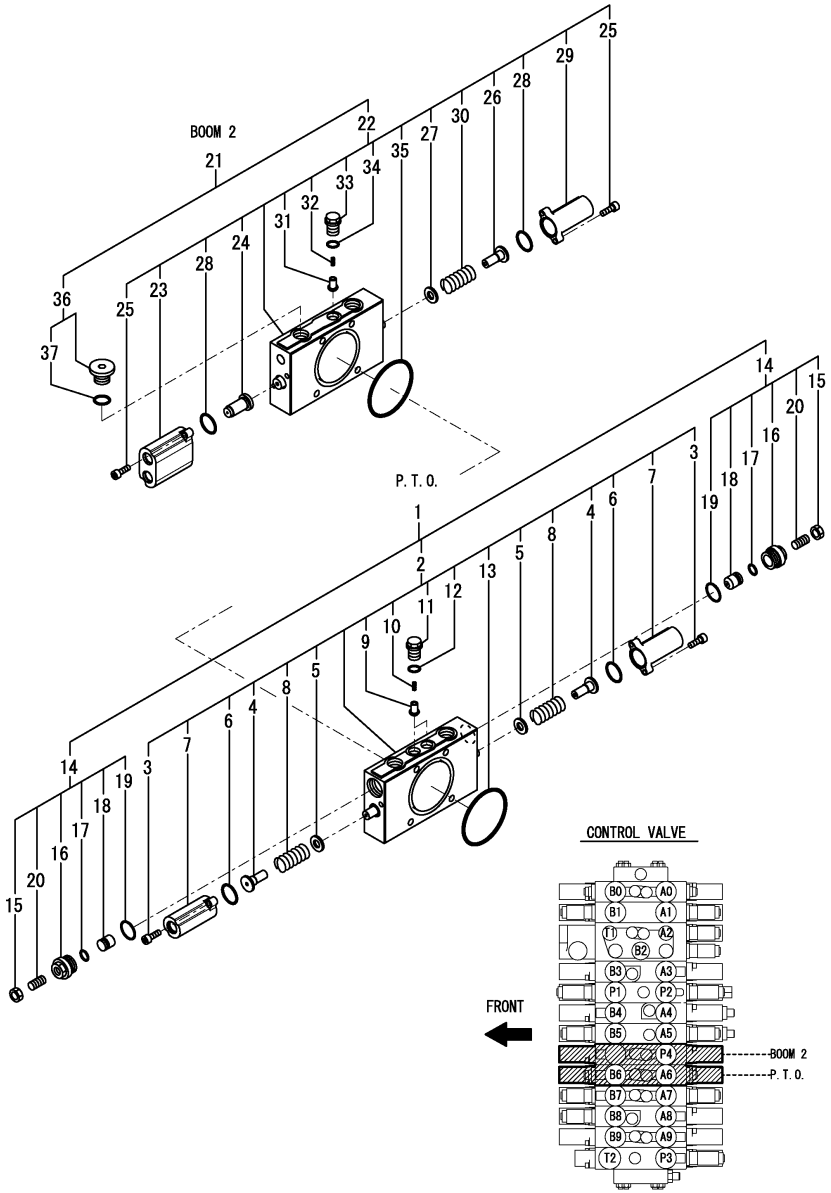

(A)=SV100-2A C(US) (D)=
(B)= (E)=
(C)= (F)=

No.	Lev.	Parts No.	Description	Q'ty (A)	(B)	(C)	(D)	(E)	(F)	I	R
1	2	172A69-71130	SECTION ASSY, PTO	1							
2	3	172A69-71140	SECTION, PTO	1							
3	4	172151-74060	BOLT, SOCKET HEAD	4							
4	4	172478-74180	SEAT, SPRING	2							
5	4	172175-74220	SEAT, SPRING	2							
6	4	172151-74320	O-RING	2							
7	4	172455-74390	CAP	2							
8	4	172455-74410	SPRING	2							
9	4	172455-74420	POPPET	2							
10	4	172455-74440	SPRING	2							
11	4	172455-74450	PLUG	2							
12	4	172455-74460	O-RING	2							
13	4	24321-000700	O-RING, 1AG70.0	1							
14	3	172455-74320	VALVE ASSY, SHUT-OFF	2							
15	4	172455-74010	NUT, SHOE	2							
16	4	172455-74020	PLUG	2							
17	4	172455-74030	O-RING	2							
18	4	172455-74040	POPPET	2							
19	4	172116-74150	O-RING	2							
20	4	172455-74990	SCREW, SETTING	2							
21	2	172A69-74291	SECTION ASSY, BOOM	1							
22	3	172A69-74301	SECTION, BOOM 2	1							
23	4	172A69-71110	CAP	1							
24	4	172A69-71120	PISTON	1							
25	4	172151-74060	BOLT, SOCKET HEAD	4							
26	4	172478-74180	SEAT, SPRING	1							
27	4	172175-74220	SEAT, SPRING	1							
28	4	172151-74320	O-RING	2							
29	4	172455-74390	CAP	1							
30	4	172455-74410	SPRING	1							
31	4	172455-74420	POPPET	1							
32	4	172455-74440	SPRING	1							
33	4	172455-74450	PLUG	1							
34	4	172455-74460	O-RING	1							
35	4	24321-000700	O-RING, 1AG70.0	1							
36	3	172187-74550	PLUG ASSY	1							
37	4	24315-000180	O-RING, 1BP18.0	1							

Remarks
* Control valve assy is shown in Fig.100.

N:Old $\xleftrightarrow[\text{No}]{\text{Yes}}$ New, Q:Old $\xleftrightarrow[\text{Yes}]{\text{No}}$ New, R:Old $\xleftrightarrow[\text{Yes}]{\text{Yes}}$ New, S:Old $\xleftrightarrow[\text{No}]{\text{No}}$ New, W:Add, Z:Discontinued, F:Interchangeable by set, K:Q'ty Change

Copyright (C) 2015 YANMAR CO., LTD. All RightsReserved.

Fig.107. CONTROL VALVE(A-TYPE)(8/9)(TO M20900)

(A)=SV100-2A C(US)
(B)=
(C)=
(D)=
(E)=
(F)=

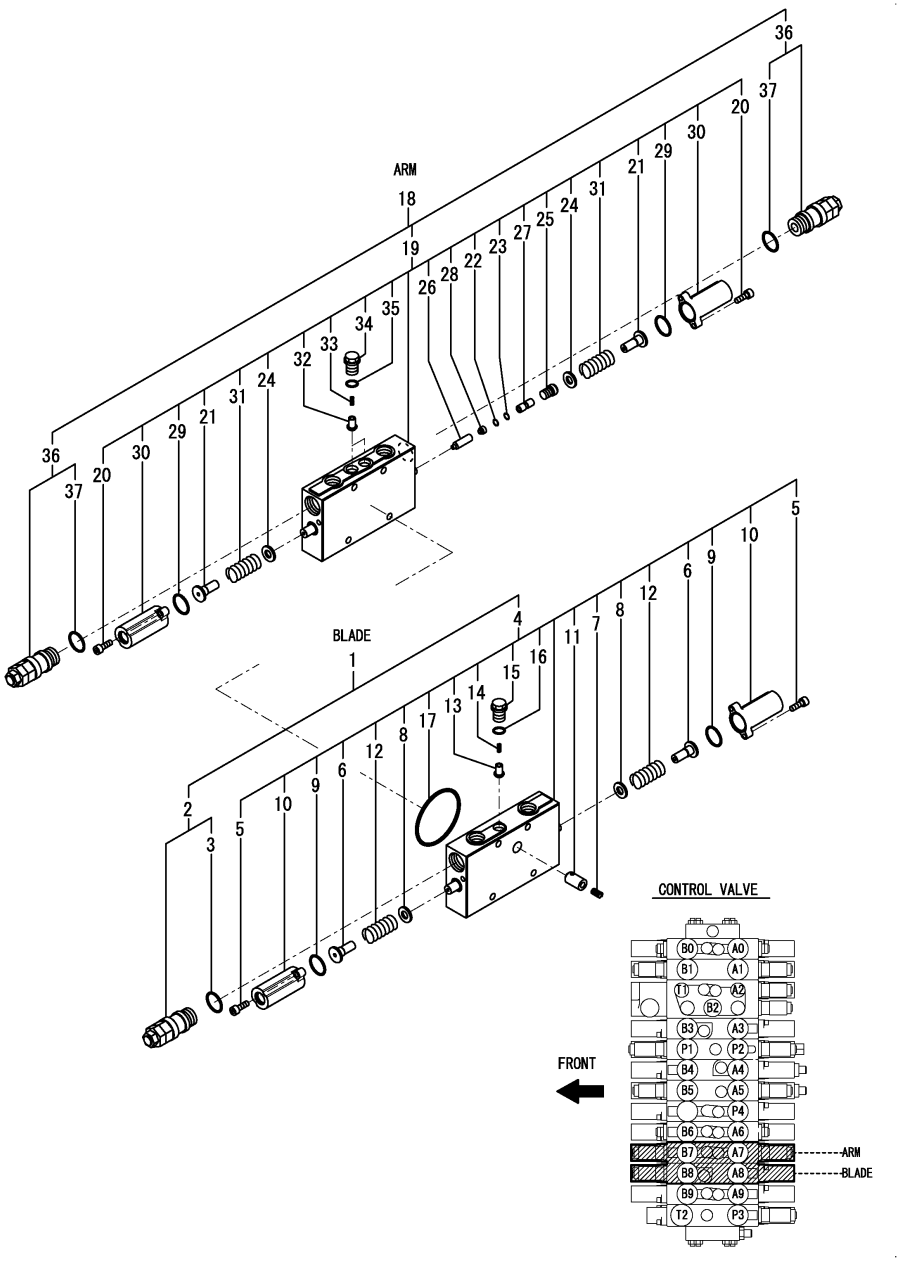

No.	Lev.	Parts No.	Description	Q'ty (A)	(B)	(C)	(D)	(E)	(F)	I	R
1	2	172A69-71170	SECTION ASSY, BLADE	1							
2	3	172A69-71180	VALVE, RELIEF	1							
3	4	172116-74150	O-RING	1							
4	3	172A69-71190	SECTION, BLADE	1							
5	4	172151-74060	BOLT, SOCKET HEAD	4							
6	4	172478-74180	SEAT, SPRING	2							
7	4	172113-74190	SPRING	1							
8	4	172175-74220	SEAT, SPRING	2							
9	4	172151-74320	O-RING	2							
10	4	172455-74390	CAP	2							
11	4	172187-74410	POPPET	1							
12	4	172455-74410	SPRING	2							
13	4	172455-74420	POPPET	1							
14	4	172455-74440	SPRING	1							
15	4	172455-74450	PLUG	1							
16	4	172455-74460	O-RING	1							
17	4	24321-000700	O-RING, 1AG70.0	1							
18	2	172B12-74150	SECTION ASSY, ARM	1							
19	3	172B12-74160	SECTION, ARM	1							
20	4	172151-74060	BOLT, SOCKET HEAD	4							
21	4	172478-74180	SEAT, SPRING	2							
22	4	172425-74200	O-RING	1							
23	4	172425-74210	RING	1							
24	4	172175-74220	SEAT, SPRING	2							
25	4	172B11-74230	PLUG	1							
26	4	172B11-74240	SPOOL, POPEET	1							
27	4	172B11-74250	SPACER	1							
28	4	172B11-74260	SPRING	1							
29	4	172151-74320	O-RING	2							
30	4	172455-74390	CAP	2							
31	4	172455-74410	SPRING	2							
32	4	172455-74420	POPPET	2							
33	4	172455-74440	SPRING	2							
34	4	172455-74450	PLUG	2							
35	4	172455-74460	O-RING	2							
36	3	172A69-74200	VALVE, RELIEF	2							
37	4	172116-74150	O-RING	2							

Remarks
* Control valve assy is shown in Fig.100.

N:Old $\xleftrightarrow[\text{No}]{\text{Yes}}$ New, Q:Old $\xleftrightarrow[\text{Yes}]{\text{No}}$ New, R:Old $\xleftrightarrow[\text{Yes}]{\text{Yes}}$ New, S:Old $\xleftrightarrow[\text{No}]{\text{No}}$ New, W:Add, Z:Discontinued, F:Interchangeable by set, K:Q'ty Change

Copyright (C) 2015 YANMAR CO., LTD. All RightsReserved.

Fig.108. CONTROL VALVE(A-TYPE)(9/9)(TO M20900)

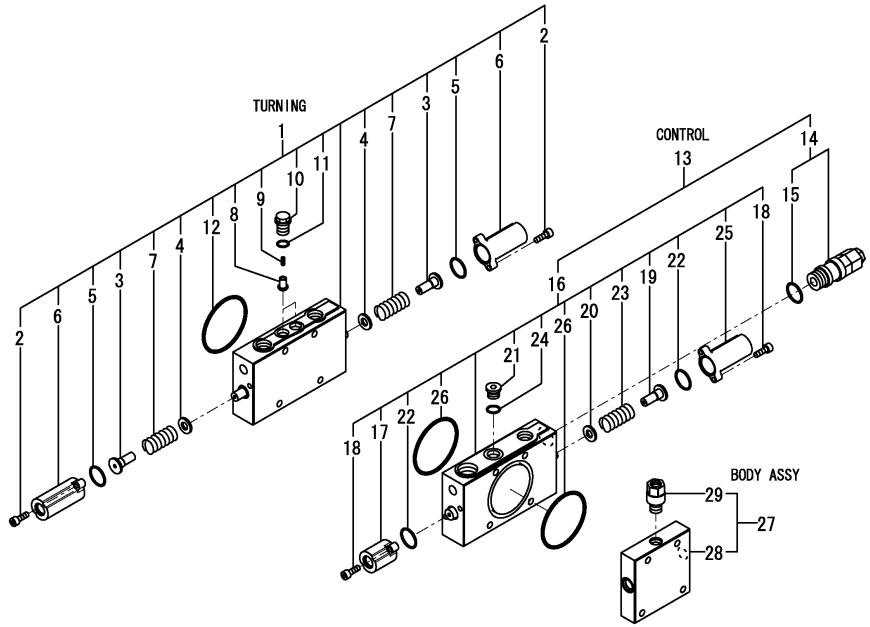

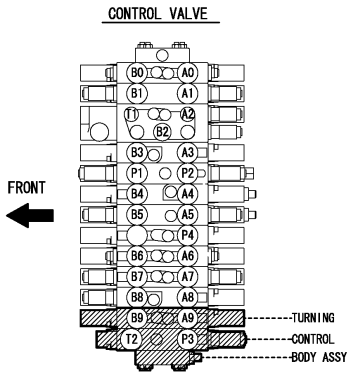

(A)=SV100-2A C(US) (D)=
(B)= (E)=
(C)= (F)=

No.	Lev.	Parts No.	Description	Q'ty (A)	(B)	(C)	(D)	(E)	(F)	I	R
1	2	172A69-71200	SECTION, SWING	1							
2	3	172151-74060	BOLT, SOCKET HEAD	4							
3	3	172478-74180	SEAT, SPRING	2							
4	3	172175-74220	SEAT, SPRING	2							
5	3	172151-74320	O-RING	2							
6	3	172455-74390	CAP	2							
7	3	172455-74410	SPRING	2							
8	3	172455-74420	POPPET	2							
9	3	172455-74440	SPRING	2							
10	3	172455-74450	PLUG	2							
11	3	172455-74460	O-RING	2							
12	3	24321-000700	O-RING, 1AG70.0	1							
13	2	172A69-71211	SECTION ASSY	1							
14	3	172A69-71221	VALVE, RELIEF 24/55	1							
15	4	172116-74150	O-RING	1							
16	3	172A69-71230	SECTION, CONTROL	1							
17	4	172A69-71240	CAP ASSY	1							
18	4	172151-74060	BOLT, SOCKET HEAD	4							
19	4	172478-74180	SEAT, SPRING	1							
20	4	172175-74220	SEAT, SPRING	1							
21	4	172A69-74250	PLUG	1							
22	4	172151-74320	O-RING	2							
23	4	172455-74410	SPRING	1							
24	4	172455-74460	O-RING	1							
25	4	172455-74480	CAP	1							
26	4	24321-000700	O-RING, 1AG70.0	2							
27	2	172A69-71250	BODY ASSY	1							
28	3	172478-74360	BODY	1							
29	3	172478-74370	PLUG ASSY	1							

Remarks
* Control valve assy is shown in Fig.100.

N:Old $\xleftrightarrow[\text{No}]{\text{Yes}}$ New, Q:Old $\xleftrightarrow[\text{Yes}]{\text{No}}$ New, R:Old $\xleftrightarrow[\text{Yes}]{\text{Yes}}$ New, S:Old $\xleftrightarrow[\text{No}]{\text{No}}$ New, W:Add, Z:Discontinued, F:Interchangeable by set, K:Q'ty Change

Copyright (C) 2015 YANMAR CO., LTD. All RightsReserved.

Fig.171. (108A)CONTROL VALVE(B-TYPE)(1/9)(FROM M20901)

(A)=SV100-2A C(US)
(B)=
(C)=
(D)=
(E)=
(F)=

CONTROL VALVE ASSY
Fig. 171 Ref. No. 1
INC. Fig. 172～179.

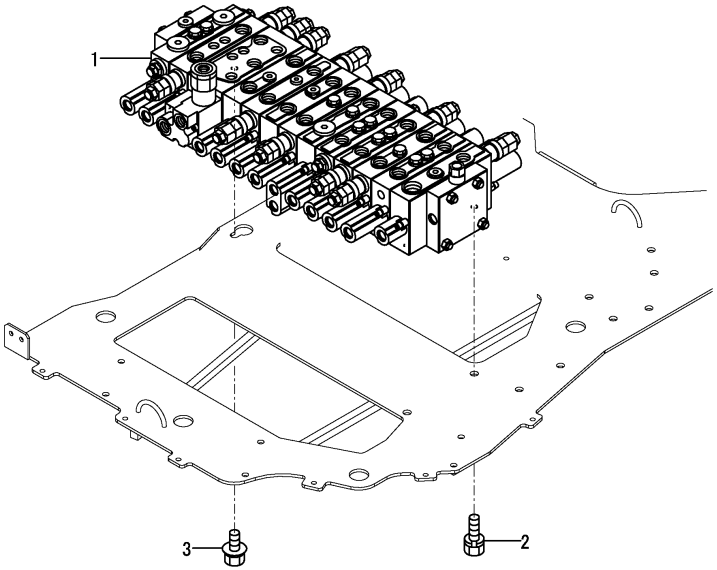

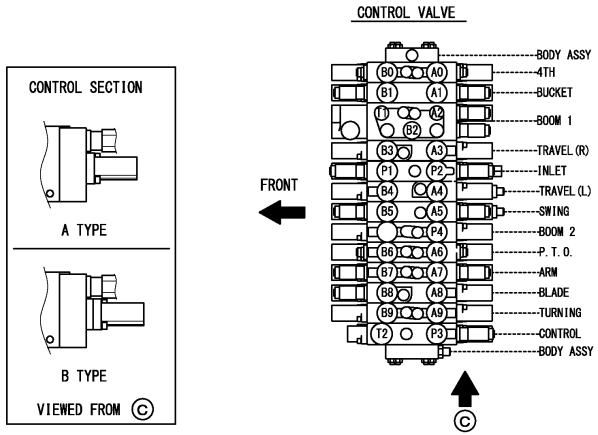

No.	Lev.	Parts No.	Description	Q'ty (A)	(B)	(C)	(D)	(E)	(F)	I	R
1	1	172B12-74101	VALVE ASSY, CONTROL	1							1
2	1	26013-100162	BOLT, M10X 16	2							
3	1	26106-100122	BOLT, M10X 12 PLATED	1							

Remarks
* A-type is shown in Fig.100.
(1)Inner parts are shown in Fig.179(108I) from Fig.172(108B).

N:Old $\xleftarrow[\text{No}]{\text{Yes}}$ New, Q:Old $\xleftarrow[\text{Yes}]{\text{No}}$ New, R:Old $\xleftarrow[\text{Yes}]{\text{Yes}}$ New, S:Old $\xleftarrow[\text{No}]{\text{No}}$ New, W:Add, Z:Discontinued, F:Interchangeable by set, K:Q'ty Change

Copyright (C) 2015 YANMAR CO., LTD. All RightsReserved.

Fig.172. (108B)CONTROL VALVE(B-TYPE)(2/9)(FROM M20901)

(A)=SV100-2A C(US) (D)=
(B)= (E)=
(C)= (F)=

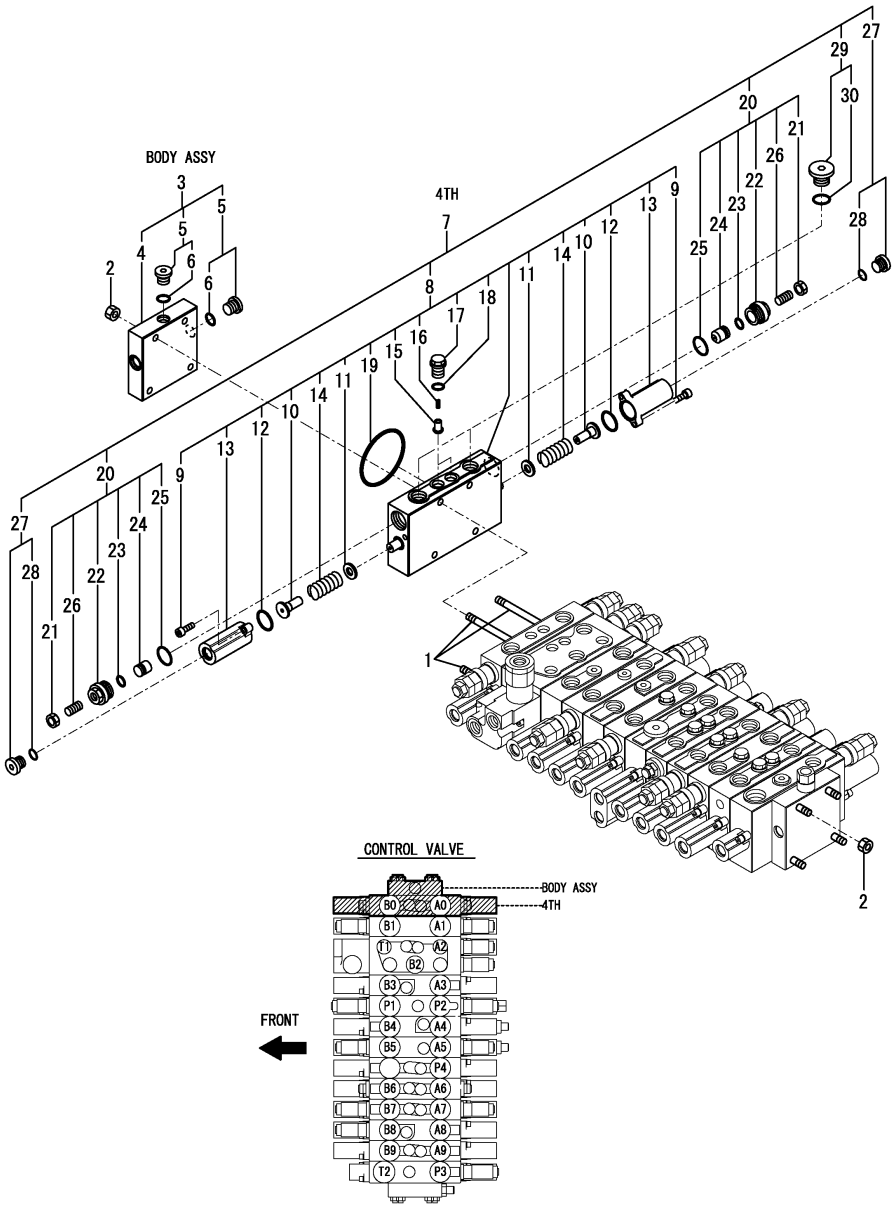

No.	Lev.	Parts No.	Description	Q'ty (A)	(B)	(C)	(D)	(E)	(F)	I	R
1	2	172A69-71260	ROD, TIE	4							
2	2	172422-74110	NUT	8							
3	2	172A69-74110	BODY ASSY	1							
4	3	172478-74360	BODY	1							
5	3	172187-74530	PLUG ASSY	2							
6	4	24315-000110	O-RING, 1BP11.0	2							
7	2	172A69-74170	SECTION ASSY, 4TH	1							
8	3	172A69-74180	SECTION, 4TH	1							
9	4	172151-74060	BOLT, SOCKET HEAD	4							
10	4	172478-74180	SEAT, SPRING	2							
11	4	172175-74220	SEAT, SPRING	2							
12	4	172151-74320	O-RING	2							
13	4	172455-74390	CAP	2							
14	4	172455-74410	SPRING	2							
15	4	172455-74420	POPPET	2							
16	4	172455-74440	SPRING	2							
17	4	172455-74450	PLUG	2							
18	4	172455-74460	O-RING	2							
19	4	24321-000700	O-RING, 1AG70.0	1							
20	3	172455-74320	VALVE ASSY, SHUT-OFF	2							
21	4	172455-74010	NUT, SHOE	2							
22	4	172455-74020	PLUG	2							
23	4	172455-74030	O-RING	2							
24	4	172455-74040	POPPET	2							
25	4	172116-74150	O-RING	2							
26	4	172455-74990	SCREW, SETTING	2							
27	3	172187-74530	PLUG ASSY	2							
28	4	24315-000110	O-RING, 1BP11.0	2							
29	3	172187-74550	PLUG ASSY	2							
30	4	24315-000180	O-RING, 1BP18.0	2							

Remarks
* Control valve assy is shown in Fig.171(108A).

N:Old $\xleftrightarrow[\text{No}]{\text{Yes}}$ New, Q:Old $\xleftrightarrow[\text{Yes}]{\text{No}}$ New, R:Old $\xleftrightarrow[\text{Yes}]{\text{Yes}}$ New, S:Old $\xleftrightarrow[\text{No}]{\text{No}}$ New, W:Add, Z:Discontinued, F:Interchangeable by set, K:Q'ty Change

Copyright (C) 2015 YANMAR CO., LTD. All RightsReserved.

Fig.173. (108C)CONTROL VALVE(B-TYPE)(3/9)(FROM M20901)

(A)=SV100-2A C(US)
(B)=
(C)=
(D)=
(E)=
(F)=

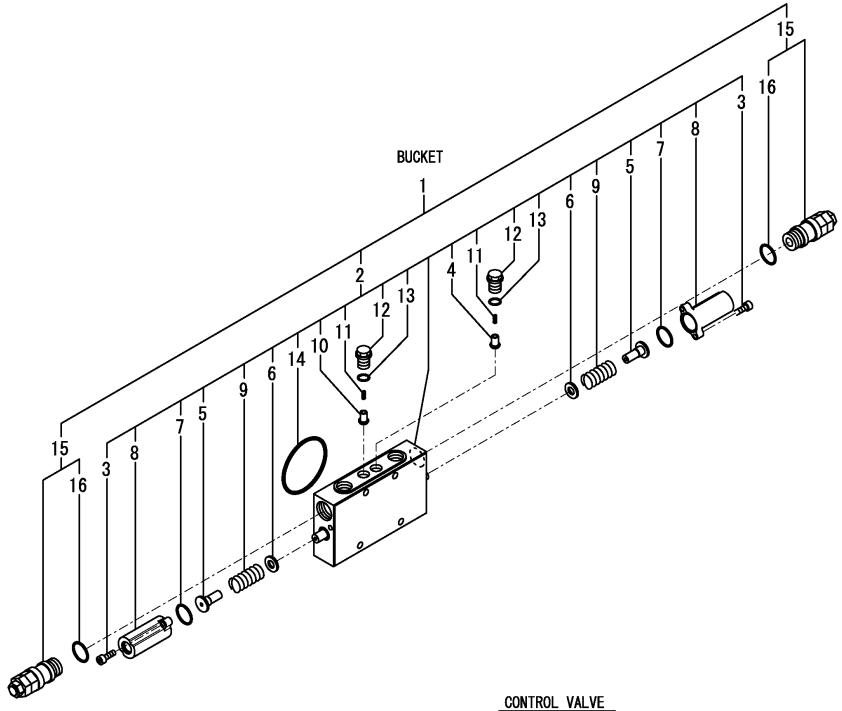

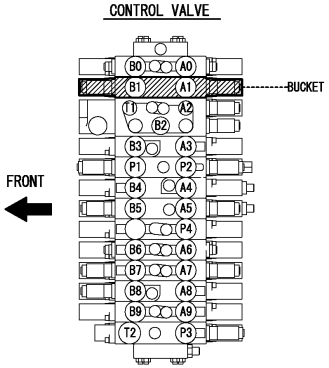

No.	Lev.	Parts No.	Description	Q'ty (A)	(B)	(C)	(D)	(E)	(F)	I	R
1	2	172A69-74191	SECTION ASSY, BACKET	1							
2	3	172A89-74161	SECTION, BUCKET	1							
3	4	172151-74060	BOLT, SOCKET HEAD	4							
4	4	172478-74170	POPPET	1							
5	4	172478-74180	SEAT, SPRING	2							
6	4	172175-74220	SEAT, SPRING	2							
7	4	172151-74320	O-RING	2							
8	4	172455-74390	CAP	2							
9	4	172455-74410	SPRING	2							
10	4	172455-74420	POPPET	1							
11	4	172455-74440	SPRING	2							
12	4	172455-74450	PLUG	2							
13	4	172455-74460	O-RING	2							
14	4	24321-000700	O-RING, 1AG70.0	1							
15	3	172A69-74200	VALVE, RELIEF	2							
16	4	172116-74150	O-RING	2							

Remarks
* Control valve assy is shown in Fig.171(108A).

N:Old $\xleftrightarrow[\text{No}]{\text{Yes}}$ New, Q:Old $\xleftrightarrow[\text{Yes}]{\text{No}}$ New, R:Old $\xleftrightarrow[\text{Yes}]{\text{Yes}}$ New, S:Old $\xleftrightarrow[\text{No}]{\text{No}}$ New, W:Add, Z:Discontinued, F:Interchangeable by set, K:Q'ty Change

Copyright (C) 2015 YANMAR CO., LTD. All RightsReserved.

Fig.174. (108D)CONTROL VALVE(B-TYPE)(4/9)(FROM M20901)

(A)=SV100-2A C(US)
(B)=
(C)=
(D)=
(E)=
(F)=

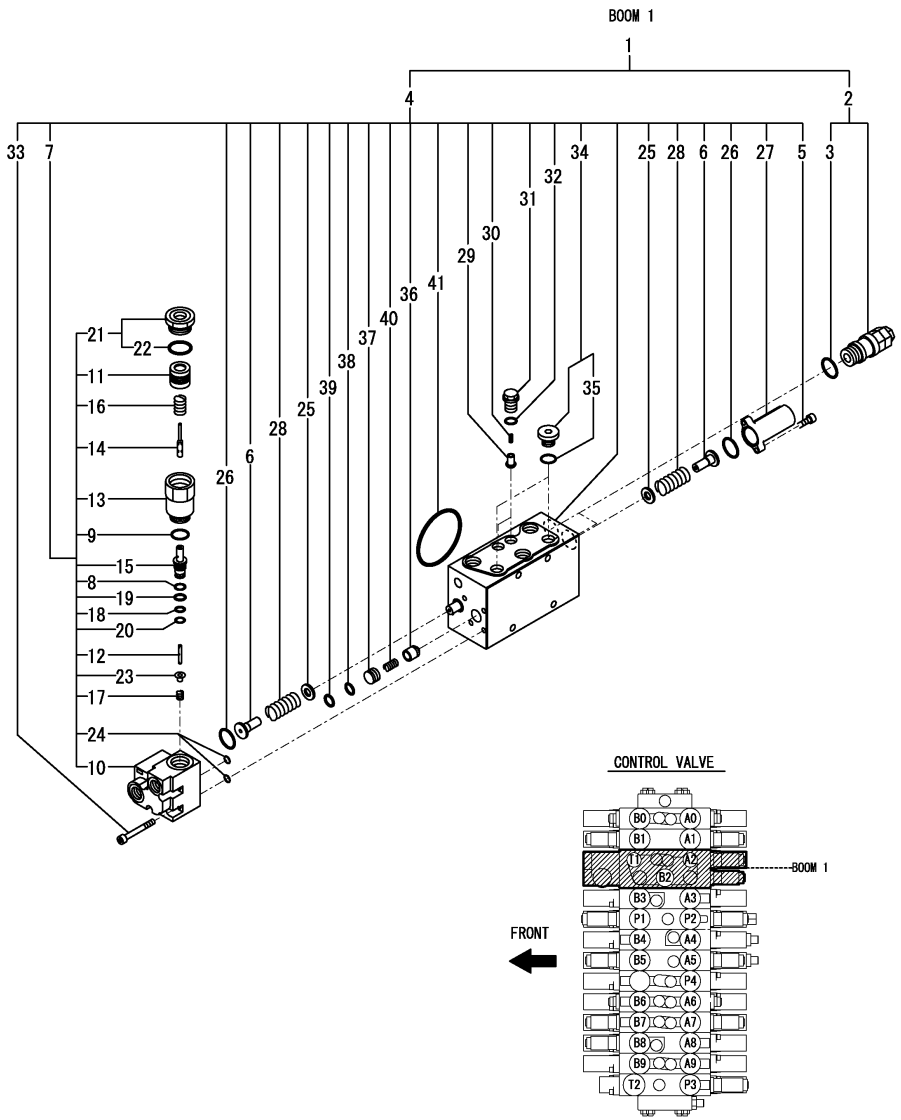

No.	Lev.	Parts No.	Description	Q'ty (A)	(B)	(C)	(D)	(E)	(F)	I	R
1	2	172A69-74220	SECTION ASSY, BOOM	1							
2	3	172A69-74200	VALVE, RELIEF	2							
3	4	172116-74150	O-RING	2							
4	3	172A69-74230	SECTION, BOOM	1							
5	4	172151-74060	BOLT, SOCKET HEAD	2							
6	4	172478-74180	SEAT, SPRING	2							
7	4	172488-74200	VALVE ASSY	1							
8	5	172638-73650	RING, BUCK UP	1							
9	5	172116-74150	O-RING	1							
10	5	172488-74210	BODY	1							
11	5	172488-74220	PISTON	1							
12	5	172455-74590	POPPET	1							
13	5	172455-74600	PLUG	1							
14	5	172455-74620	SPOOL	1							
15	5	172455-74630	SLEEVE	1							
16	5	172455-74640	SPRING	2							
17	5	172455-74650	SPRING	1							
18	5	172455-74660	O-RING	1							
19	5	172455-74670	O-RING	1							
20	5	172455-74680	RING, BUCK UP	1							
21	5	172187-74690	PLUG ASSY	1							
22	6	172312-74770	O-RING	1							
23	5	172455-74720	SEAT, SPRING	1							
24	5	24315-000070	O-RING, 1BP7.0	2							
25	4	172175-74220	SEAT, SPRING	2							
26	4	172151-74320	O-RING	2							
27	4	172455-74390	CAP	1							
28	4	172455-74410	SPRING	2							
29	4	172455-74420	POPPET	2							
30	4	172455-74440	SPRING	2							
31	4	172455-74450	PLUG	2							
32	4	172455-74460	O-RING	2							
33	4	172455-74530	BOLT,SOCKET HEAD	5							
34	4	172187-74540	PLUG ASSY	2							
35	5	24315-000140	O-RING, 1BP14.0	2							
36	4	172455-74550	POPPET	1							
37	4	172455-74560	SPACER	1							
38	4	172455-74570	O-RING	1							
39	4	172455-74580	RING, BUCK UP	1							
40	4	172187-74630	SPRING	1							
41	4	24321-000700	O-RING, 1AG70.0	1							

Remarks
* Control valve assy is shown in Fig.171(108A).

N:Old $\frac{\text{Yes}}{\text{No}}$ New, Q:Old $\frac{\text{No}}{\text{Yes}}$ New, R:Old $\frac{\text{Yes}}{\text{Yes}}$ New, S:Old $\frac{\text{No}}{\text{No}}$ New, W:Add, Z:Discontinued, F:Interchangeable by set, K:Q'ty Change

Copyright (C) 2015 YANMAR CO., LTD. All RightsReserved.

Fig.175. (108E)CONTROL VALVE(B-TYPE)(5/9)(FROM M20901)

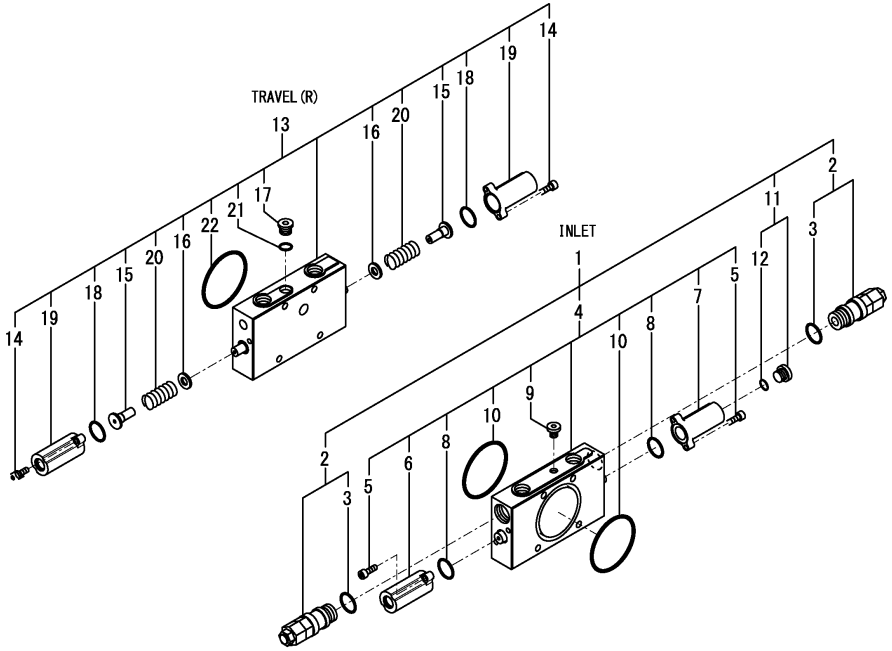

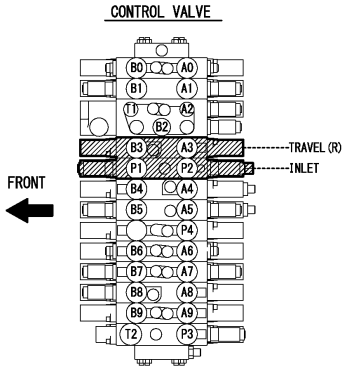

(A)=SV100-2A C(US) (D)=
(B)= (E)=
(C)= (F)=

No.	Lev.	Parts No.	Description	Q'ty (A)	(B)	(C)	(D)	(E)	(F)	I	R
1	2	172A69-74120	INLET SECTION ASSY	1							
2	3	172A69-74130	VALVE, RELIEF	2							
3	4	172116-74150	O-RING	2							
4	3	172A69-74140	SECTION, INLET	1							
5	4	172151-74060	BOLT, SOCKET HEAD	4							
6	4	172A69-74150	CAP ASSY	1							
7	4	172A69-74160	CAP	1							
8	4	172151-74320	O-RING	2							
9	4	172422-74330	PLUG ASSY	1							
10	4	24321-000700	O-RING, 1AG70.0	2							
11	3	172187-74530	PLUG ASSY	1							
12	4	24315-000110	O-RING, 1BP11.0	1							
13	2	172A69-74240	SECTION, TRAVEL	1							
14	3	172151-74060	BOLT, SOCKET HEAD	4							
15	3	172478-74180	SEAT, SPRING	2							
16	3	172175-74220	SEAT, SPRING	2							
17	3	172A69-74250	PLUG	1							
18	3	172151-74320	O-RING	2							
19	3	172455-74390	CAP	2							
20	3	172455-74410	SPRING	2							
21	3	172455-74460	O-RING	1							
22	3	24321-000700	O-RING, 1AG70.0	1							

Remarks
* Control valve assy is shown in Fig.171(108A).

N:Old $\xleftrightarrow[\text{No}]{\text{Yes}}$ New, Q:Old $\xleftrightarrow[\text{Yes}]{\text{No}}$ New, R:Old $\xleftrightarrow[\text{Yes}]{\text{Yes}}$ New, S:Old $\xleftrightarrow[\text{No}]{\text{No}}$ New, W:Add, Z:Discontinued, F:Interchangeable by set, K:Q'ty Change

Copyright (C) 2015 YANMAR CO., LTD. All RightsReserved.

Fig.176. (108F)CONTROL VALVE(B-TYPE)(6/9)(FROM M20901)

(A)=SV100-2A C(US)
(B)=
(C)=
(D)=
(E)=
(F)=

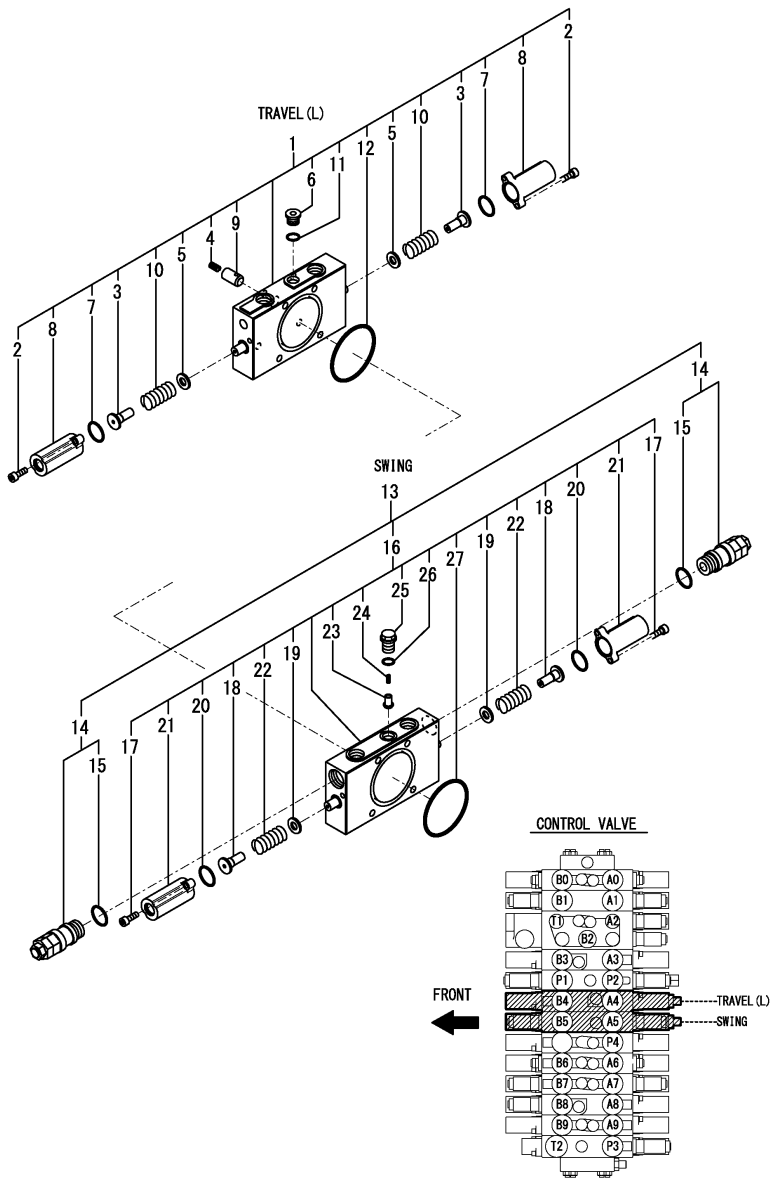

No.	Lev.	Parts No.	Description	Q'ty (A)	(B)	(C)	(D)	(E)	(F)	I	R
1	2	172A69-74260	SECTION, TRAVEL	1							
2	3	172151-74060	BOLT, SOCKET HEAD	4							
3	3	172478-74180	SEAT, SPRING	2							
4	3	172113-74190	SPRING	1							
5	3	172175-74220	SEAT, SPRING	2							
6	3	172A69-74250	PLUG	1							
7	3	172151-74320	O-RING	2							
8	3	172455-74390	CAP	2							
9	3	172187-74410	POPPET	1							
10	3	172455-74410	SPRING	2							
11	3	172455-74460	O-RING	1							
12	3	24321-000700	O-RING, 1AG70.0	1							
13	2	172A69-74270	SECTION ASSY, SWING	1							
14	3	172A69-74200	VALVE, RELIEF	2							
15	4	172116-74150	O-RING	2							
16	3	172A69-74280	SECTION, SWING	1							
17	4	172151-74060	BOLT, SOCKET HEAD	4							
18	4	172478-74180	SEAT, SPRING	2							
19	4	172175-74220	SEAT, SPRING	2							
20	4	172151-74320	O-RING	2							
21	4	172455-74390	CAP	2							
22	4	172455-74410	SPRING	2							
23	4	172455-74420	POPPET	1							
24	4	172455-74440	SPRING	1							
25	4	172455-74450	PLUG	1							
26	4	172455-74460	O-RING	1							
27	4	24321-000700	O-RING, 1AG70.0	1							

Remarks
* Control valve assy is shown in Fig.171(108A).

N:Old $\frac{\text{Yes}}{\text{No}}$ New, Q:Old $\frac{\text{No}}{\text{Yes}}$ New, R:Old $\frac{\text{Yes}}{\text{Yes}}$ New, S:Old $\frac{\text{No}}{\text{No}}$ New, W:Add, Z:Discontinued, F:Interchangeable by set, K:Q'ty Change

Copyright (C) 2015 YANMAR CO., LTD. All RightsReserved.

Fig.177. (108G)CONTROL VALVE(B-TYPE)(7/9)(FROM M20901)

(A)=SV100-2A C(US)
(B)=
(C)=
(D)=
(E)=
(F)=

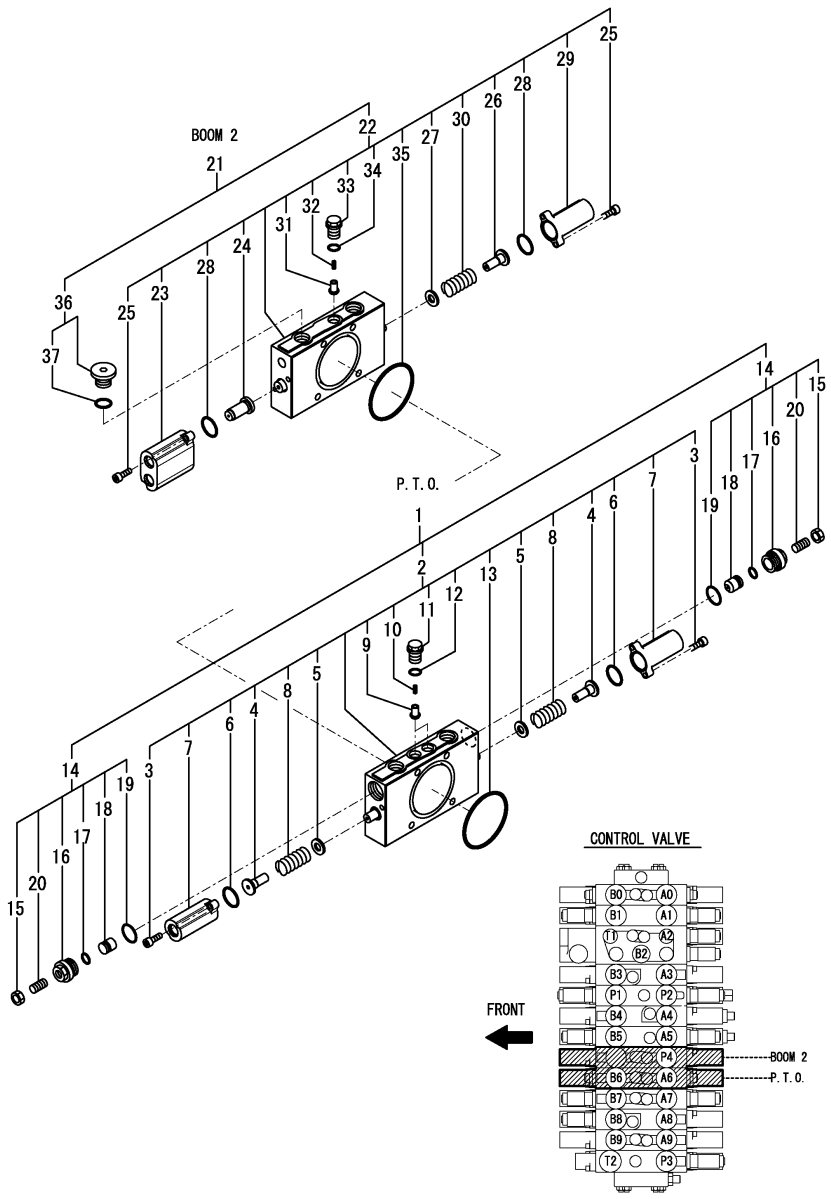

No.	Lev.	Parts No.	Description	Q'ty (A)	(B)	(C)	(D)	(E)	(F)	I	R
1	2	172A69-71130	SECTION ASSY, PTO	1							
2	3	172A69-71140	SECTION, PTO	1							
3	4	172151-74060	BOLT, SOCKET HEAD	4							
4	4	172478-74180	SEAT, SPRING	2							
5	4	172175-74220	SEAT, SPRING	2							
6	4	172151-74320	O-RING	2							
7	4	172455-74390	CAP	2							
8	4	172455-74410	SPRING	2							
9	4	172455-74420	POPPET	2							
10	4	172455-74440	SPRING	2							
11	4	172455-74450	PLUG	2							
12	4	172455-74460	O-RING	2							
13	4	24321-000700	O-RING, 1AG70.0	1							
14	3	172455-74320	VALVE ASSY, SHUT-OFF	2							
15	4	172455-74010	NUT, SHOE	2							
16	4	172455-74020	PLUG	2							
17	4	172455-74030	O-RING	2							
18	4	172455-74040	POPPET	2							
19	4	172116-74150	O-RING	2							
20	4	172455-74990	SCREW, SETTING	2							
21	2	172B11-74290	SECTION ASSY, BOOM2	1							
22	3	172B11-74300	SECTION, BOOM2	1							
23	4	172A69-71110	CAP	1							
24	4	172A69-71120	PISTON	1							
25	4	172151-74060	BOLT, SOCKET HEAD	4							
26	4	172478-74180	SEAT, SPRING	1							
27	4	172175-74220	SEAT, SPRING	1							
28	4	172151-74320	O-RING	2							
29	4	172455-74390	CAP	1							
30	4	172455-74410	SPRING	1							
31	4	172455-74420	POPPET	1							
32	4	172455-74440	SPRING	1							
33	4	172455-74450	PLUG	1							
34	4	172455-74460	O-RING	1							
35	4	24321-000700	O-RING, 1AG70.0	1							
36	3	172187-74550	PLUG ASSY	1							
37	4	24315-000180	O-RING, 1BP18.0	1							

Remarks
* Control valve assy is shown in Fig.171(108A).

N:Old $\xleftarrow[\text{No}]{\text{Yes}}$ New, Q:Old $\xleftarrow[\text{Yes}]{\text{No}}$ New, R:Old $\xleftarrow[\text{Yes}]{\text{Yes}}$ New, S:Old $\xleftarrow[\text{No}]{\text{No}}$ New, W:Add, Z:Discontinued, F:Interchangeable by set, K:Q'ty Change

Copyright (C) 2015 YANMAR CO., LTD. All RightsReserved.

Fig.178. (108H)CONTROL VALVE(B-TYPE)(8/9)(FROM M20901)

(A)=SV100-2A C(US)
(B)=
(C)=
(D)=
(E)=
(F)=

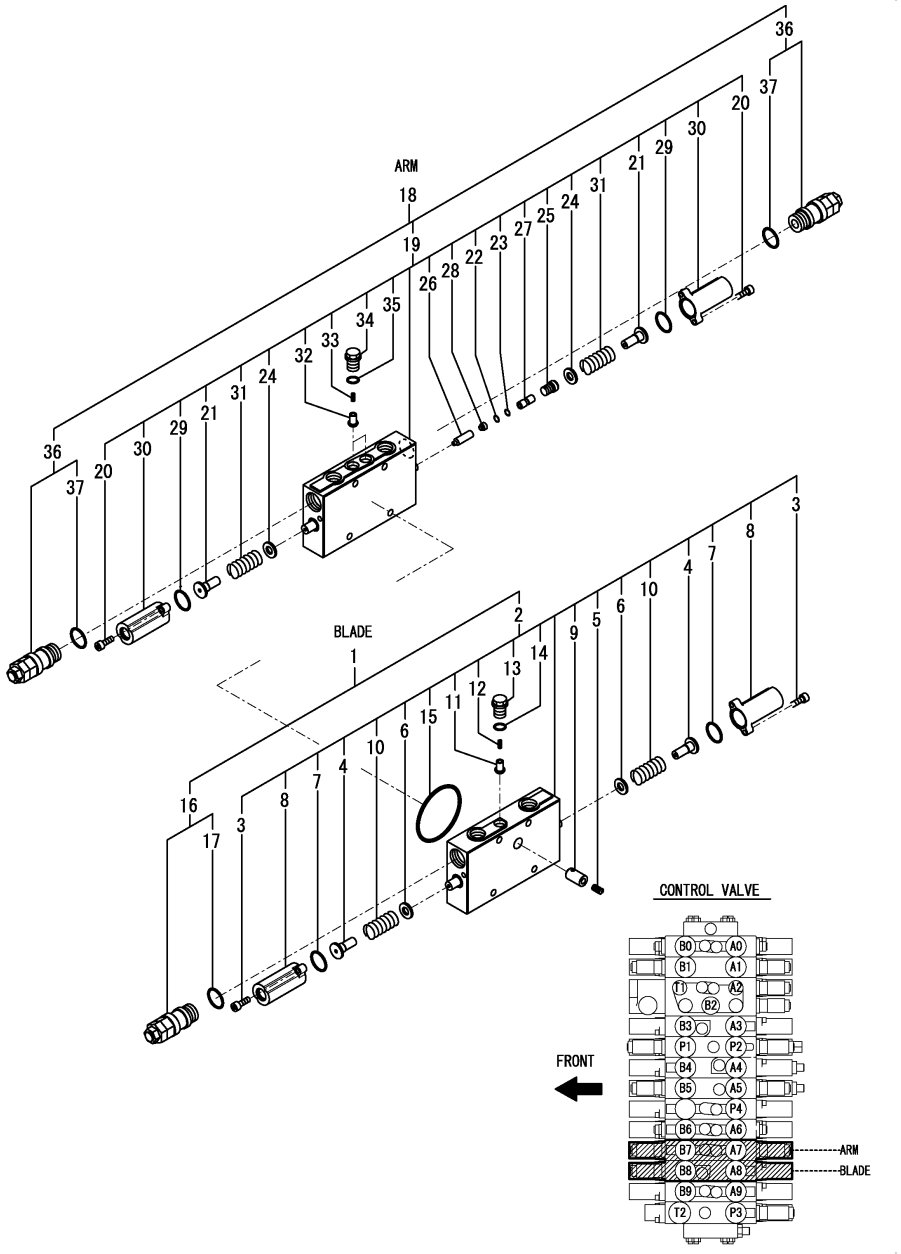

No.	Lev.	Parts No.	Description	Q'ty (A)	(B)	(C)	(D)	(E)	(F)	I	R
1	2	172A69-71170	SECTION ASSY, BLADE	1							
2	3	172A69-71190	SECTION, BLADE	1							
3	4	172151-74060	BOLT, SOCKET HEAD	4							
4	4	172478-74180	SEAT, SPRING	2							
5	4	172113-74190	SPRING	1							
6	4	172175-74220	SEAT, SPRING	2							
7	4	172151-74320	O-RING	2							
8	4	172455-74390	CAP	2							
9	4	172187-74410	POPPET	1							
10	4	172455-74410	SPRING	2							
11	4	172455-74420	POPPET	1							
12	4	172455-74440	SPRING	1							
13	4	172455-74450	PLUG	1							
14	4	172455-74460	O-RING	1							
15	4	24321-000700	O-RING, 1AG70.0	1							
16	3	172B12-74440	RELIEF, 15.0/50	1							
17	4	172116-74150	O-RING	1							
18	2	172B12-74150	SECTION ASSY, ARM	1							
19	3	172B12-74160	SECTION, ARM	1							
20	4	172151-74060	BOLT, SOCKET HEAD	4							
21	4	172478-74180	SEAT, SPRING	2							
22	4	172425-74200	O-RING	1							
23	4	172425-74210	RING	1							
24	4	172175-74220	SEAT, SPRING	2							
25	4	172B11-74230	PLUG	1							
26	4	172B11-74240	SPOOL, POPEET	1							
27	4	172B11-74250	SPACER	1							
28	4	172B11-74260	SPRING	1							
29	4	172151-74320	O-RING	2							
30	4	172455-74390	CAP	2							
31	4	172455-74410	SPRING	2							
32	4	172455-74420	POPPET	2							
33	4	172455-74440	SPRING	2							
34	4	172455-74450	PLUG	2							
35	4	172455-74460	O-RING	2							
36	3	172A69-74200	VALVE, RELIEF	2							
37	4	172116-74150	O-RING	2							

Remarks
* Control valve assy is shown in Fig.171(108A).

N:Old $\xleftarrow[\text{No}]{\text{Yes}}$ New, Q:Old $\xleftarrow[\text{Yes}]{\text{No}}$ New, R:Old $\xleftarrow[\text{Yes}]{\text{Yes}}$ New, S:Old $\xleftarrow[\text{No}]{\text{No}}$ New, W:Add, Z:Discontinued, F:Interchangeable by set, K:Q'ty Change

Copyright (C) 2015 YANMAR CO., LTD. All RightsReserved.

Fig.179. (108I)CONTROL VALVE(B-TYPE)(9/9)(FROM M20901)

(A)=SV100-2A C(US)
(B)=
(C)=
(D)=
(E)=
(F)=

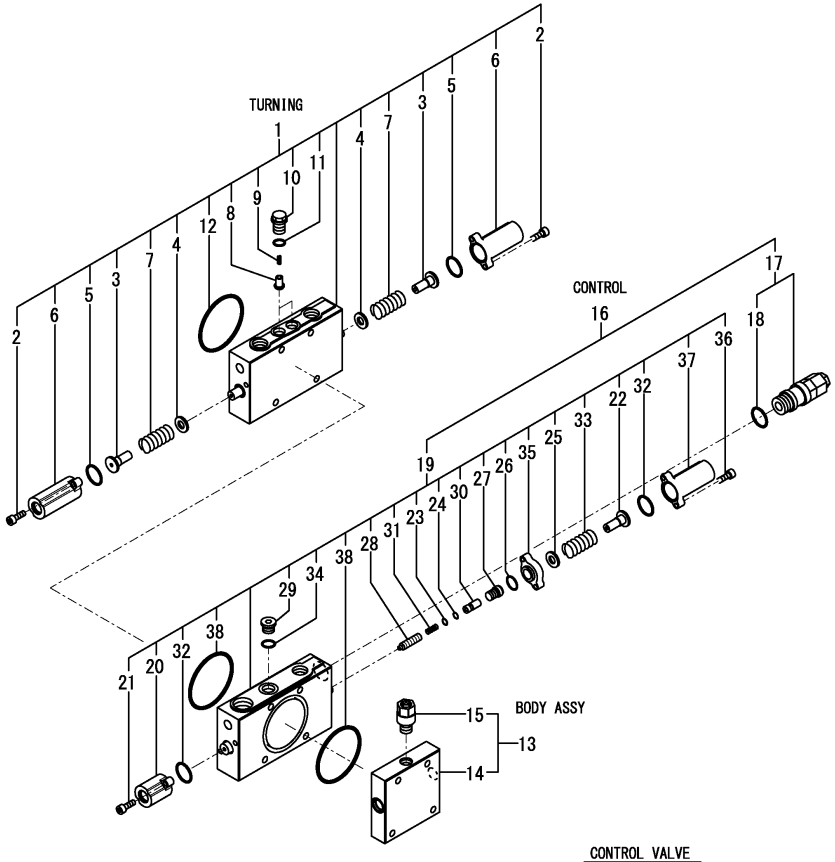

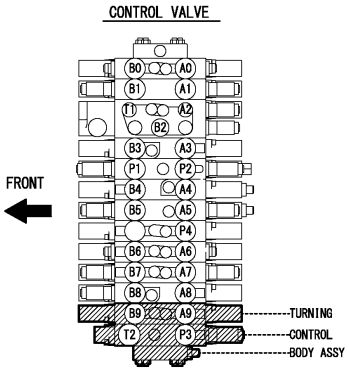

No.	Lev.	Parts No.	Description	Q'ty (A)	(B)	(C)	(D)	(E)	(F)	I	R
1	2	172A69-71200	SECTION, SWING	1							
2	3	172151-74060	BOLT, SOCKET HEAD	4							
3	3	172478-74180	SEAT, SPRING	2							
4	3	172175-74220	SEAT, SPRING	2							
5	3	172151-74320	O-RING	2							
6	3	172455-74390	CAP	2							
7	3	172455-74410	SPRING	2							
8	3	172455-74420	POPPET	2							
9	3	172455-74440	SPRING	2							
10	3	172455-74450	PLUG	2							
11	3	172455-74460	O-RING	2							
12	3	24321-000700	O-RING, 1AG70.0	1							
13	2	172A69-71250	BODY ASSY	1							
14	3	172478-74360	BODY	1							
15	3	172478-74370	PLUG ASSY	1							
16	2	172B12-74350	SECTION ASSY,CONFLUX	1							
17	3	172A69-71221	VALVE, RELIEF 24/55	1							
18	4	172116-74150	O-RING	1							
19	3	172B12-74360	SECTION, CONFLUX	1							
20	4	172A69-71240	CAP ASSY	1							
21	4	172151-74060	BOLT, SOCKET HEAD	2							
22	4	172478-74180	SEAT, SPRING	1							
23	4	172425-74200	O-RING	1							
24	4	172425-74210	RING	1							
25	4	172175-74220	SEAT, SPRING	1							
26	4	172312-74230	O-RING	1							
27	4	172B11-74230	PLUG	1							
28	4	172B11-74240	SPOOL, POPEET	1							
29	4	172A69-74250	PLUG	1							
30	4	172B11-74250	SPACER	1							
31	4	172B11-74260	SPRING	1							
32	4	172151-74320	O-RING	2							
33	4	172455-74410	SPRING	1							
34	4	172455-74460	O-RING	1							
35	4	172B27-74460	SPACER	1							
36	4	172B27-74470	BOLT, HEX SOCKET	2							
37	4	172455-74480	CAP	1							
38	4	24321-000700	O-RING, 1AG70.0	2							

Remarks
* Control valve assy is shown in Fig.171(108A).

N:Old $\xleftrightarrow[\text{No}]{\text{Yes}}$ New, Q:Old $\xleftrightarrow[\text{Yes}]{\text{No}}$ New, R:Old $\xleftrightarrow[\text{Yes}]{\text{Yes}}$ New, S:Old $\xleftrightarrow[\text{No}]{\text{No}}$ New, W:Add, Z:Discontinued, F:Interchangeable by set, K:Q'ty Change

Copyright (C) 2015 YANMAR CO., LTD. All RightsReserved.

Fig.109. 2-WAY VALVE

(A)=SV100-2A C(US)
(B)=
(C)=
(D)=
(E)=
(F)=

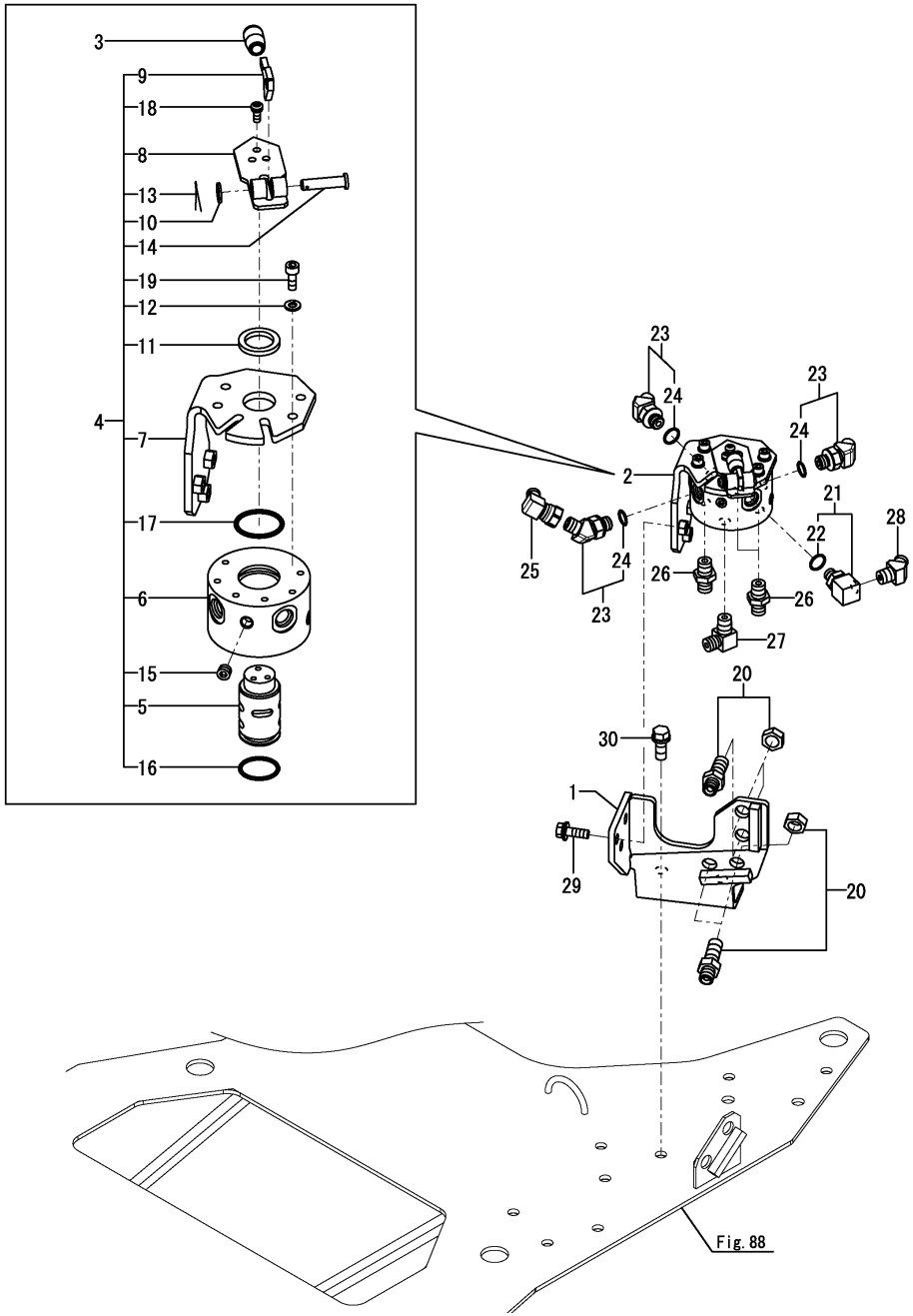

No.	Lev.	Parts No.	Description	Q'ty (A)	(B)	(C)	(D)	(E)	(F)	I	R
1	1	172A69-71750	BRACKET ASSY,2WAY	1							
2	1	172A36-74690	VALVE ASSY, 2-WAY	1							
3	2	172157-58830	KNOB, 6.5X18X35	1							
4	2	172A36-74700	VALVE ASSY, 2-WAY	1							
5	3	172437-74711	SHAFT	1							
6	3	172437-74720	BLOCK,VALVE	1							
7	3	172437-74732	STAY ASSY	1							
8	3	172A36-74750	LEVER	1							
9	3	172A36-74780	PLATE,LOCK	1							
10	3	22117-080000	WASHER, 8	1							
11	3	22137-240000	WASHER, 24	1							
12	3	22217-060000	WASHER, SPRING 6	4							
13	3	22417-200160	PIN, COTTER 2.0X16	1							
14	3	22487-080300	PIN, H 8X 30	1							
15	3	23871-010000	PLUG, R01	4							
16	3	24311-000250	O-RING, 1AP25.0	1							
17	3	24311-000320	O-RING, 1AP32.0	1							
18	3	26022-050122	SCREW, M5X12	3							
19	3	26450-060162	BOLT, M6X 16	4							
20	1	172151-76050	JOINT	4							
21	1	172137-76100	ELBOW	1							
22	2	24315-000110	O-RING, 1BP11.0	1							
23	1	172173-76102	CONNECTOR ASSY	3							
24	2	41851-000110	O-RING	3							
25	1	172828-76330	CONNECTOR, 1/4X1/4	1							
26	1	23391-020000	JOINT, RGI-1/4	3							
27	1	23393-020000	JOINT, 90RGI-1/4	1							
28	1	23394-020000	JOINT, 45RGI-1/4	1							
29	1	26013-080252	BOLT, SPRING M8X 25	3							
30	1	26013-100252	BOLT, SPRING M10X 25	2							

N:Old $\overset{\text{Yes}}{\underset{\text{No}}{\leftrightarrows}}$ New, Q:Old $\overset{\text{No}}{\underset{\text{Yes}}{\leftrightarrows}}$ New, R:Old $\overset{\text{Yes}}{\underset{\text{Yes}}{\leftrightarrows}}$ New, S:Old $\overset{\text{No}}{\underset{\text{No}}{\leftrightarrows}}$ New, W:Add, Z:Discontinued, F:Interchangeable by set, K:Q'ty Change

Copyright (C) 2015 YANMAR CO., LTD. All RightsReserved.

Fig.110. BLADE VALVE

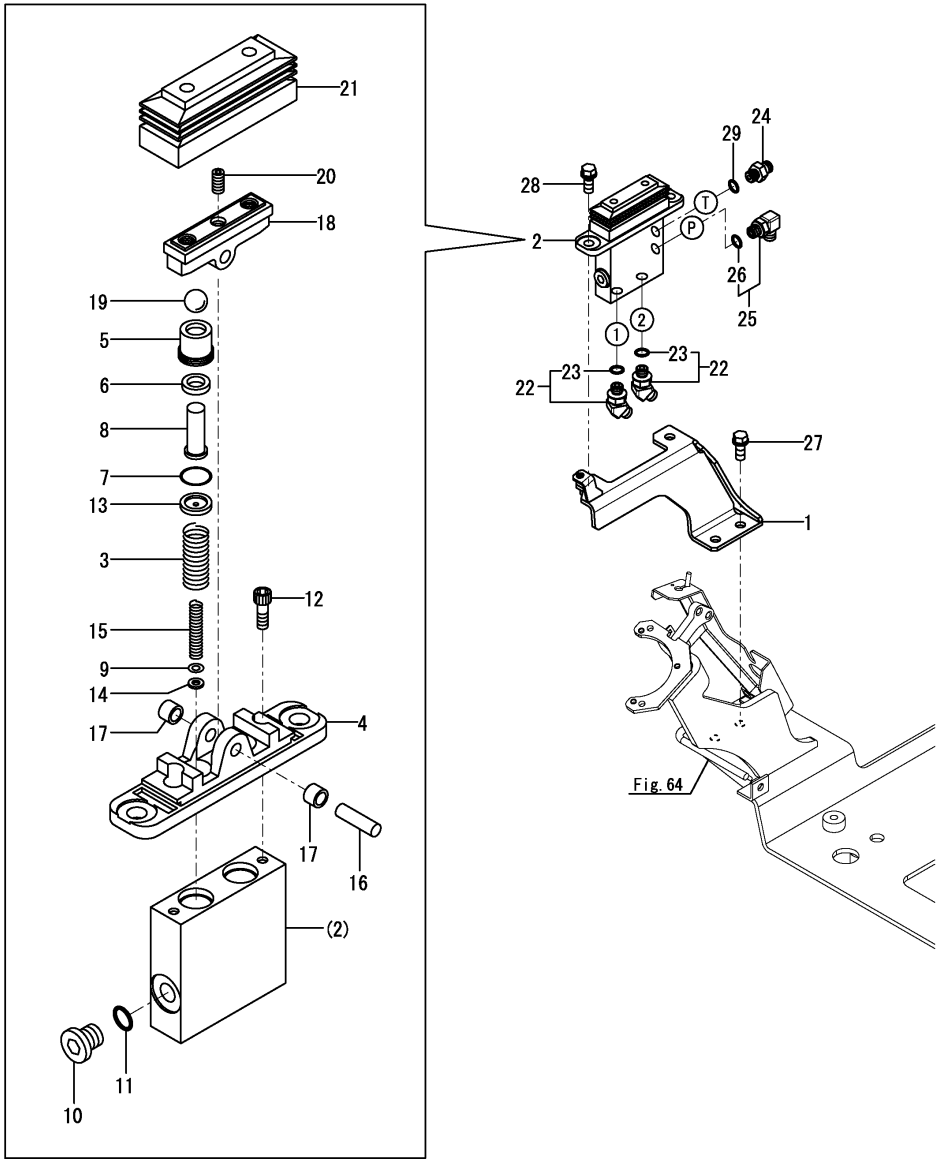

(A)=SV100-2A C(US)
(B)=
(C)=
(D)=
(E)=
(F)=

No.	Lev.	Parts No.	Description	Q'ty (A)	(B)	(C)	(D)	(E)	(F)	I	R
1	1	172A69-74310	STAY ASSY, VALVE	1							
2	1	172A69-74670	VALVE ASSY	1							
3	2	172A69-74680	SPRING	2							
4	2	172A47-74710	COVER	1							
5	2	172A47-74720	PLUG	2							
6	2	172A47-74730	PACKING	2							
7	2	172A47-74740	O-RING	2							
8	2	172A47-74750	ROD, PUSH	2							
9	2	172A47-74760	SHIM	2							
10	2	172A47-74770	PLUG	1							
11	2	172A47-74780	O-RING	1							
12	2	172A47-74790	BOLT	2							
13	2	172A47-74800	SEAT, SPRING	2							
14	2	172A47-74810	WASHER	2							
15	2	172A47-74820	SPRING	2							
16	2	172A47-74840	SHAFT, CAM	1							
17	2	172A47-74850	BUSH	2							
18	2	172A47-74860	CAM	1							
19	2	172A47-74870	BALL, STEEL	2							
20	2	172A47-74880	SCREW, SETTING	1							
21	2	172A47-74890	BELLOWS	1							
22	1	172173-76102	CONNECTOR ASSY	2							
23	2	41851-000110	O-RING	2							
24	1	172123-76121	ADAPTER	1							
25	1	172141-76181	CONNECTOR ASSY, 02FF	1							
26	2	41851-000110	O-RING	1							
27	1	26013-100252	BOLT, SPRING M10X 25	2							
28	1	26013-100252	BOLT, SPRING M10X 25	2							
29	1	41851-000110	O-RING	1							

N:Old $\overset{\text{Yes}}{\underset{\text{No}}{\leftrightarrows}}$ New, Q:Old $\overset{\text{No}}{\underset{\text{Yes}}{\leftrightarrows}}$ New, R:Old $\overset{\text{Yes}}{\underset{\text{Yes}}{\leftrightarrows}}$ New, S:Old $\overset{\text{No}}{\underset{\text{No}}{\leftrightarrows}}$ New, W:Add, Z:Discontinued, F:Interchangeable by set, K:Q'ty Change

Copyright (C) 2015 YANMAR CO., LTD. All RightsReserved.

Fig.111. SOLENOID VALVE(PILOT)

(A)=SV100-2A C(US)
(B)=
(C)=
(D)=
(E)=
(F)=

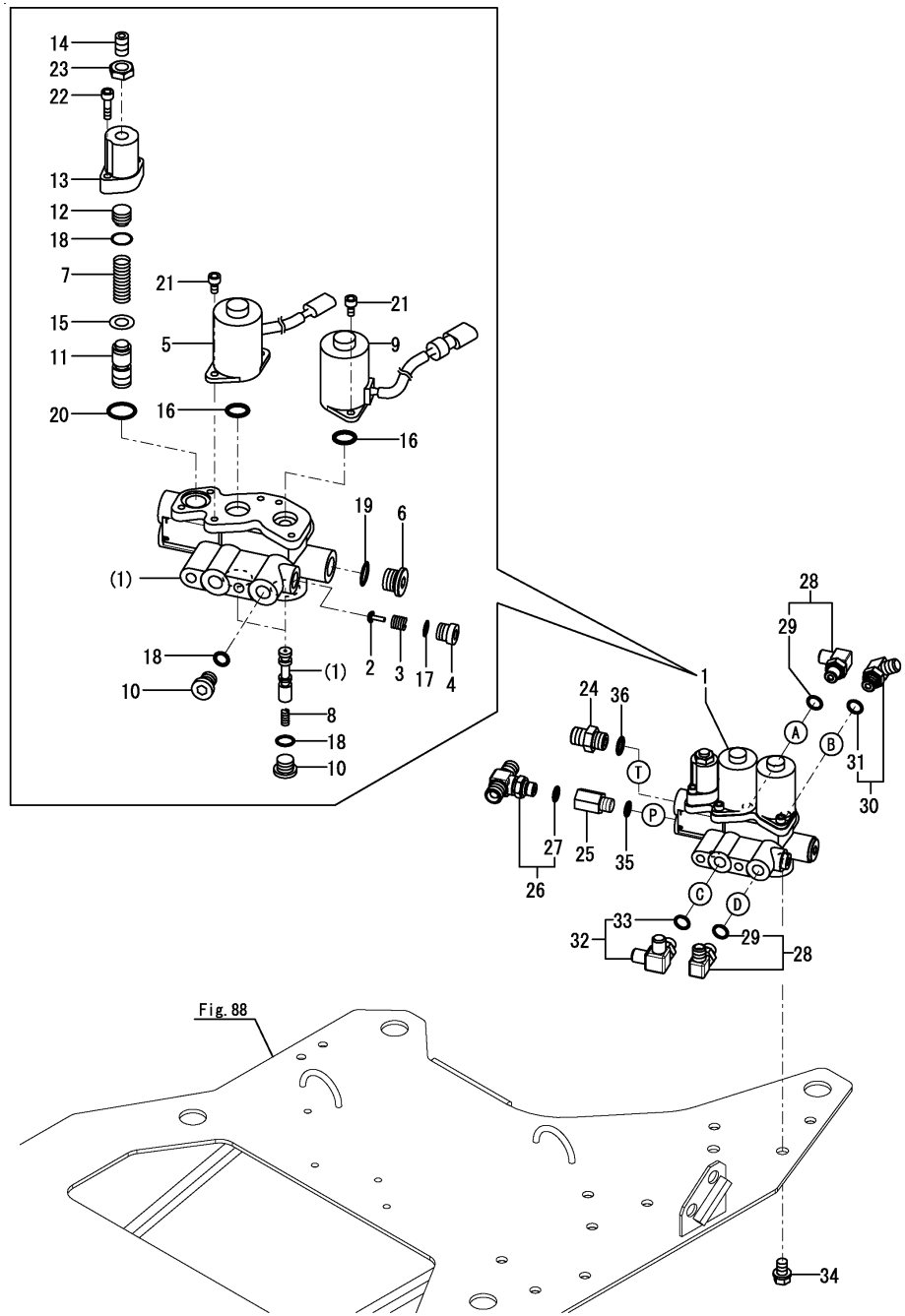

No.	Lev.	Parts No.	Description	Q'ty (A)	(B)	(C)	(D)	(E)	(F)	I	R
1	1	172A69-74411	VALVE ASSY,SOL	1							
2	2	172A69-74440	PLUNGER	1							
3	2	172A69-74450	SPRING	1							
4	2	172A69-74460	PLUG	1							
5	2	172A69-74470	VALVE, SOLENOID	1							
6	2	172A69-74520	PLUG, PF1/2	1							
7	2	172A69-74540	SPRING	1							
8	2	172A46-74710	SPRING	2							
9	2	172A46-74720	VALVE, SOLENOID	1							
10	2	172A46-74730	PLUG,G1/4	3							
11	2	172A69-74960	PLUNGER	1							
12	2	172A69-74970	PLUG	1							
13	2	172A69-74980	COVER	1							
14	2	172A69-74990	SCREW, ADJUSTING	1							
15	2	22117-080000	WASHER, 8	1							
16	2	24311-000160	O-RING, 1AP16.0	2							
17	2	24315-000100	O-RING, 1BP10.0	1							
18	2	24315-000110	O-RING, 1BP11.0	4							
19	2	24315-000180	O-RING, 1BP18.0	1							
20	2	24315-000200	O-RING, 1BP20.0	1							
21	2	26450-050122	BOLT, M5X 12	4							
22	2	26450-050202	BOLT, M5X 20	2							
23	2	26736-100002	NUT, M10	1							
24	1	172730-75141	ADAPTER	1							
25	1	172422-76140	CONNECTOR	1							
26	1	172B11-76150	CONNECTOR, TEE	1							
27	2	41851-000110	O-RING	1							
28	1	172141-76181	CONNECTOR ASSY, 02FF	2							
29	2	41851-000110	O-RING	2							
30	1	172141-76181	CONNECTOR ASSY, 02FF	1							
31	2	41851-000110	O-RING	1							
32	1	172491-76330	ELBOW, ADJUSTABLE	1							
33	2	24315-000110	O-RING, 1BP11.0	1							
34	1	26013-100162	BOLT, SPRING M10X 16	2							
35	1	41851-000110	O-RING	1							
36	1	41851-000140	O-RING	1							

N:Old $\overset{\text{Yes}}{\underset{\text{No}}{\leftrightarrow}}$ New, Q:Old $\overset{\text{No}}{\underset{\text{Yes}}{\leftrightarrow}}$ New, R:Old $\overset{\text{Yes}}{\underset{\text{Yes}}{\leftrightarrow}}$ New, S:Old $\overset{\text{No}}{\underset{\text{No}}{\leftrightarrow}}$ New, W:Add, Z:Discontinued, F:Interchangeable by set, K:Q'ty Change

Copyright (C) 2015 YANMAR CO., LTD. All RightsReserved.

Fig.112. SOLENOID VALVE(P.T.O.)

(A)=SV100-2A C(US)
(B)=
(C)=
(D)=
(E)=
(F)=

No.	Lev.	Parts No.	Description	Q'ty (A)	(B)	(C)	(D)	(E)	(F)	I	R
1	1	172123-76121	ADAPTER	1							
2	1	172141-76181	CONNECTOR ASSY, 02FF	2							
3	2	41851-000110	O-RING	2							
4	1	172186-76430	NIPPLE, ELBOW	1							
5	2	24315-000110	O-RING, 1BP11.0	1							
6	1	26013-080162	BOLT, SPRING M8X 16	2							
7	1	41851-000110	O-RING	1							
8	1	172B11-74410	VALVE ASSY,PTO	1							

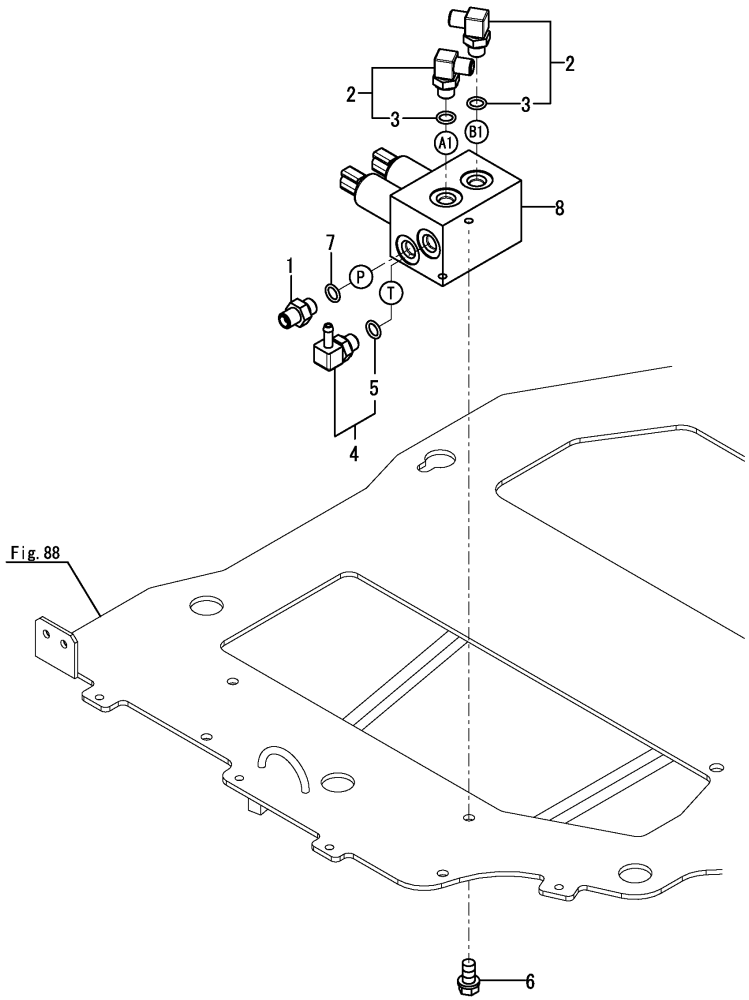

N:Old ⇄(Yes/No) New, Q:Old ⇄(No/Yes) New, R:Old ⇄(Yes/Yes) New, S:Old ⇄(No/No) New, W:Add, Z:Discontinued, F:Interchangeable by set, K:Q'ty Change

Copyright (C) 2015 YANMAR CO., LTD. All RightsReserved.

Fig.113. SOLENOID VALVE(QUICK COUPLER)

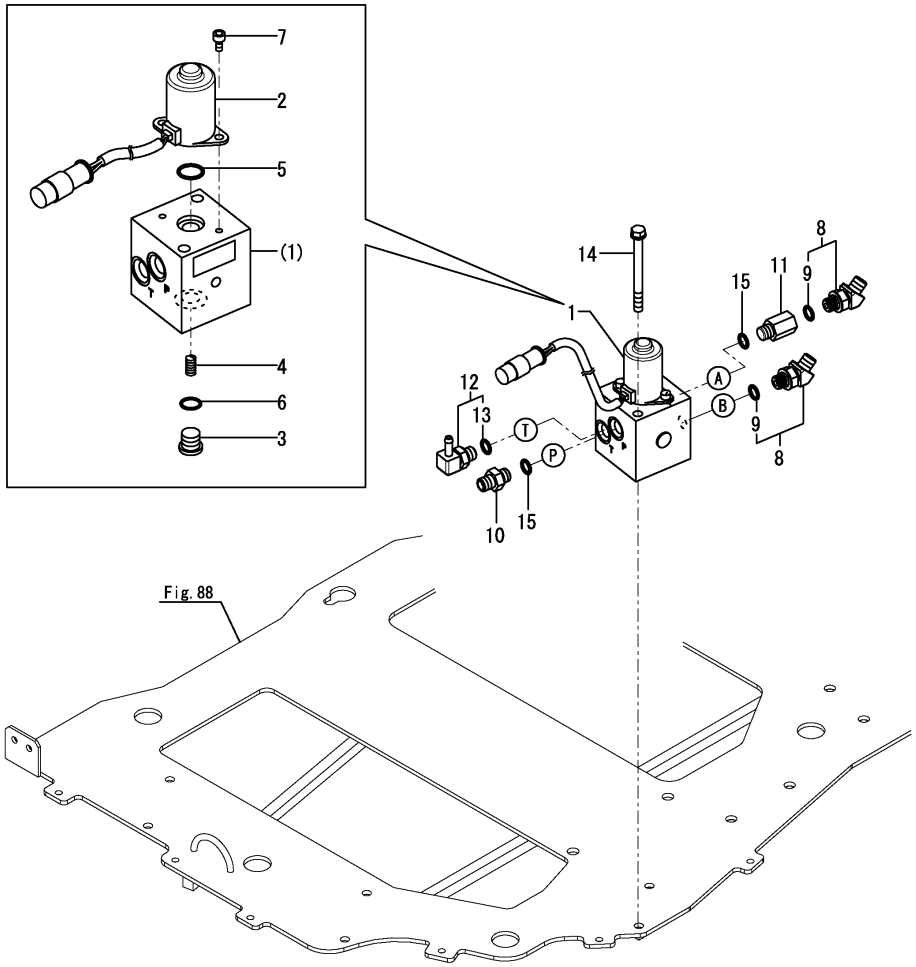

(A)=SV100-2A C(US)
(B)=
(C)=
(D)=
(E)=
(F)=

No.	Lev.	Parts No.	Description	Q'ty (A)	(B)	(C)	(D)	(E)	(F)	I	R
1	1	172A69-74550	VALVE ASSY	1							
2	2	172A69-74560	SOLENOID	1							
3	2	172A69-74590	PLUG G1/4	1							
4	2	172A46-74710	SPRING	1							
5	2	24311-000160	O-RING, 1AP16.0	1							
6	2	24315-000110	O-RING, 1BP11.0	1							
7	2	26450-050102	BOLT, M5X 10	2							
8	1	172173-76102	CONNECTOR ASSY	2							
9	2	41851-000110	O-RING	2							
10	1	172123-76121	ADAPTER	1							
11	1	172422-76140	CONNECTOR	1							
12	1	172186-76430	NIPPLE, ELBOW	1							
13	2	24315-000110	O-RING, 1BP11.0	1							
14	1	26013-080902	BOLT, SPRING M8X 90	2							
15	1	41851-000110	O-RING	2							

N:Old $\xleftrightarrow[\text{No}]{\text{Yes}}$ New, Q:Old $\xleftrightarrow[\text{Yes}]{\text{No}}$ New, R:Old $\xleftrightarrow[\text{Yes}]{\text{Yes}}$ New, S:Old $\xleftrightarrow[\text{No}]{\text{No}}$ New, W:Add, Z:Discontinued, F:Interchangeable by set, K:Q'ty Change

Copyright (C) 2015 YANMAR CO., LTD. All RightsReserved.

Fig.114. REMOTE CONTROL VALVE(TRAVEL)

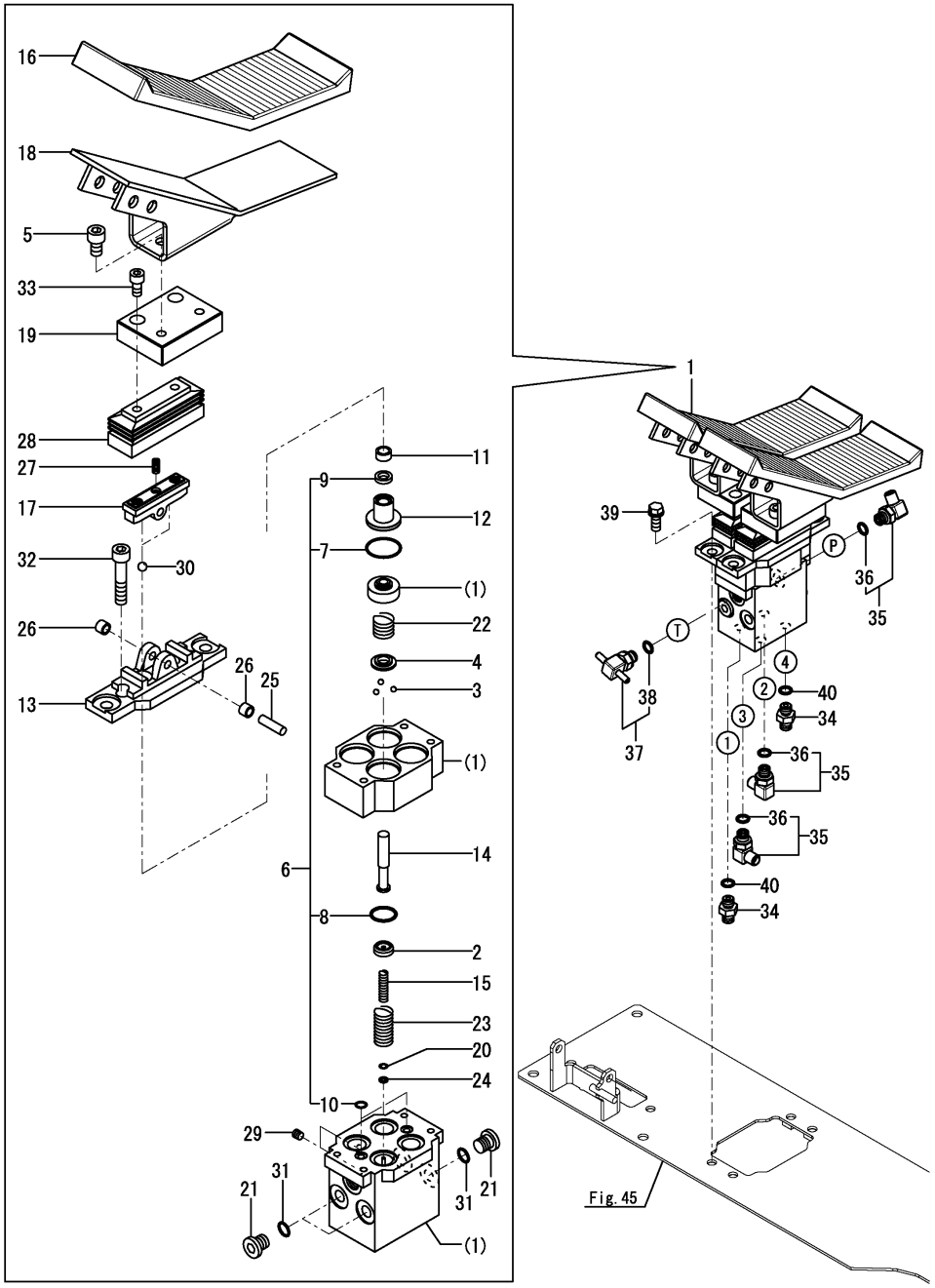

(A)=SV100-2A C(US)
(B)=
(C)=
(D)=
(E)=
(F)=

No.	Lev.	Parts No.	Description	Q'ty (A)	(B)	(C)	(D)	(E)	(F)	I	R
1	1	172A89-74700	VALVE ASSY, TRAVEL	1							
2	2	172A69-71300	SEAT, SPRING	4							
3	2	172A69-71310	BALL,STEEL	12							
4	2	172A69-71320	SEAT, SPRING	4							
5	2	172A69-71340	BOLT 10X16	4							
6	2	172A69-71350	SEAL SET	1							
7	3	172A69-71360	O-RING	4							
8	3	172A69-71370	O-RING	4							
9	3	172A47-74730	PACKING	4							
10	3	24315-000080	O-RING, 1BP8.0	2							
11	2	172A69-71380	CUP, GREASE	4							
12	2	172A69-71390	PLUG	4							
13	2	172A69-71400	COVER	2							
14	2	172A89-74710	ROD,PUSH	4							
15	2	172A89-74720	SPRING	4							
16	2	172A69-74730	COVER, PEDAL	2							
17	2	172A89-74730	CAM	2							
18	2	172A69-74740	PEDAL	2							
19	2	172A69-74750	BLOCK	2							
20	2	172A47-74760	SHIM	4							
21	2	172A47-74770	PLUG	3							
22	2	172A69-74770	SPRING	4							
23	2	172A69-74780	SPRING	4							
24	2	172A47-74810	WASHER	4							
25	2	172A47-74840	SHAFT, CAM	2							
26	2	172A47-74850	BUSH	4							
27	2	172A47-74880	SCREW, SETTING	2							
28	2	172A47-74890	BELLOWS	2							
29	2	172455-77150	PLUG	2							
30	2	24190-100001	BALL, STEEL 5/16	4							
31	2	24315-000110	O-RING, 1BP11.0	3							
32	2	26450-060502	BOLT M 6X 50	4							
33	2	26450-080162	BOLT, M8X 16	4							
34	1	172123-76121	ADAPTER	2							
35	1	172141-76181	CONNECTOR ASSY, 02FF	3							
36	2	41851-000110	O-RING	3							
37	1	172A47-76230	NIPPLE, TEE	1							
38	2	41851-000110	O-RING	1							
39	1	26013-100252	BOLT, SPRING M10X 25	4							
40	1	41851-000110	O-RING	2							

N:Old $\overset{\text{Yes}}{\underset{\text{No}}{\leftrightarrow}}$ New, Q:Old $\overset{\text{No}}{\underset{\text{Yes}}{\leftrightarrow}}$ New, R:Old $\overset{\text{Yes}}{\underset{\text{Yes}}{\leftrightarrow}}$ New, S:Old $\overset{\text{No}}{\underset{\text{No}}{\leftrightarrow}}$ New, W:Add, Z:Discontinued, F:Interchangeable by set, K:Q'ty Change

Copyright (C) 2015 YANMAR CO., LTD. All RightsReserved.

Fig.115. REMOTE CONTROL VALVE(SWING)

(A)=SV100-2A C(US)
(B)=
(C)=
(D)=
(E)=
(F)=

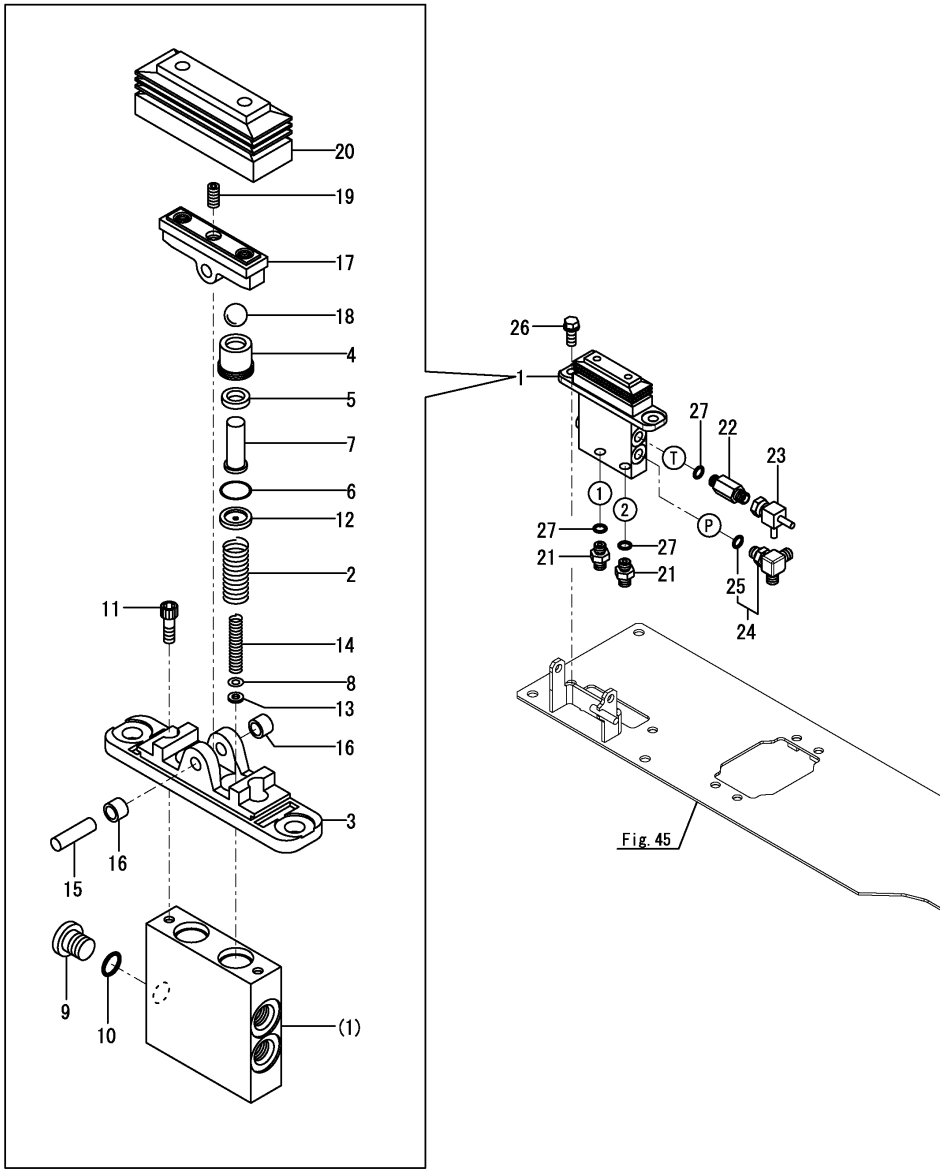

No.	Lev.	Parts No.	Description	Q'ty (A)	(B)	(C)	(D)	(E)	(F)	I	R
1	1	172A69-74670	VALVE ASSY	1							
2	2	172A69-74680	SPRING	2							
3	2	172A47-74710	COVER	1							
4	2	172A47-74720	PLUG	2							
5	2	172A47-74730	PACKING	2							
6	2	172A47-74740	O-RING	2							
7	2	172A47-74750	ROD, PUSH	2							
8	2	172A47-74760	SHIM	2							
9	2	172A47-74770	PLUG	1							
10	2	172A47-74780	O-RING	1							
11	2	172A47-74790	BOLT	2							
12	2	172A47-74800	SEAT, SPRING	2							
13	2	172A47-74810	WASHER	2							
14	2	172A47-74820	SPRING	2							
15	2	172A47-74840	SHAFT, CAM	1							
16	2	172A47-74850	BUSH	2							
17	2	172A47-74860	CAM	1							
18	2	172A47-74870	BALL, STEEL	2							
19	2	172A47-74880	SCREW, SETTING	1							
20	2	172A47-74890	BELLOWS	1							
21	1	172123-76121	ADAPTER	2							
22	1	172183-76200	CONNECTOR	1							
23	1	172A47-76320	NIPPLE	1							
24	1	172491-76330	ELBOW, ADJUSTABLE	1							
25	2	24315-000110	O-RING, 1BP11.0	1							
26	1	26013-100252	BOLT, SPRING M10X 25	2							
27	1	41851-000110	O-RING	3							

N:Old ←Yes/No→ New, Q:Old ←No/Yes→ New, R:Old ←Yes/Yes→ New, S:Old ←No/No→ New, W:Add, Z:Discontinued, F:Interchangeable by set, K:Q'ty Change

Copyright (C) 2015 YANMAR CO., LTD. All RightsReserved.

Fig.116. REMOTE CONTROL VALVE(OPERATION)

(A)=SV100-2A C(US)
(B)=
(C)=
(D)=
(E)=
(F)=

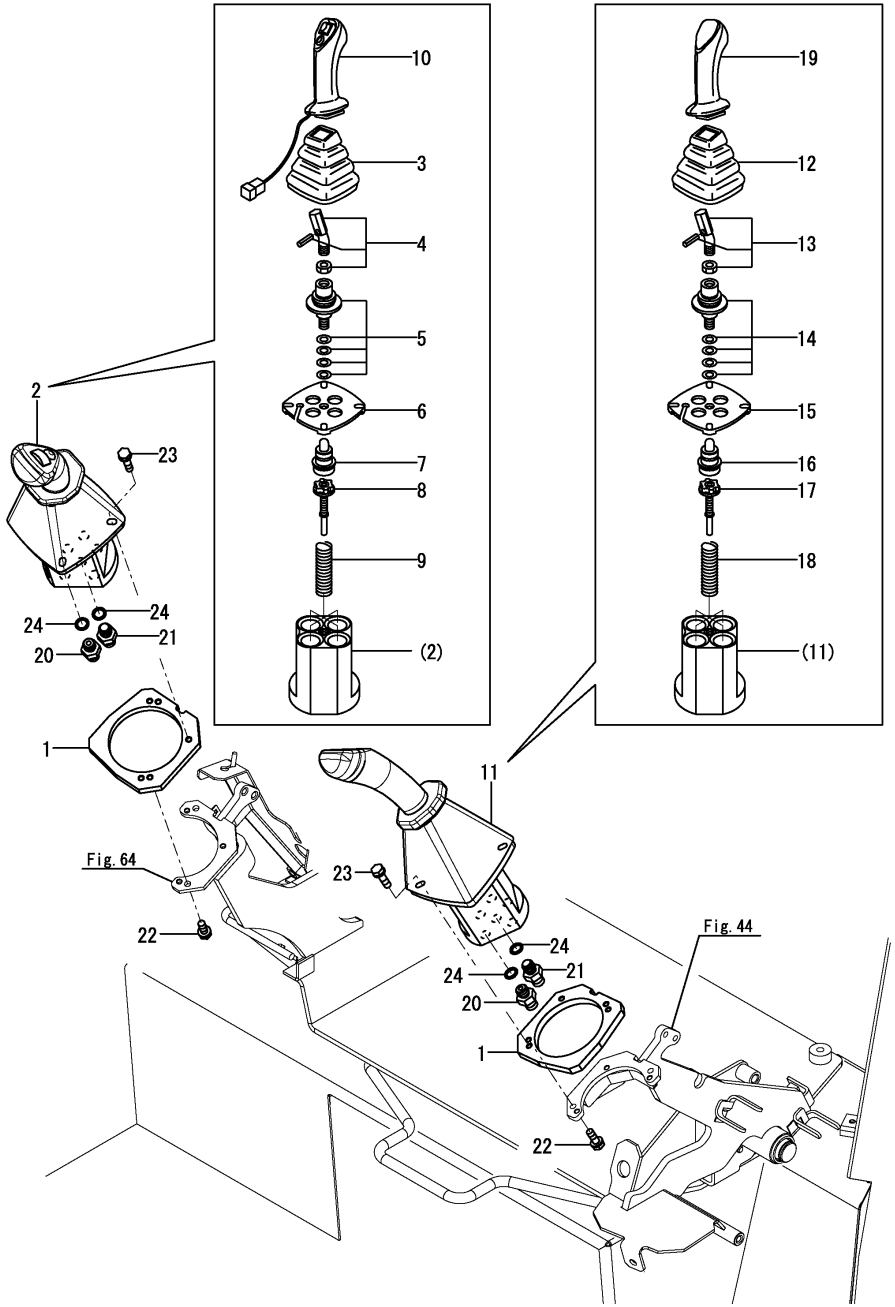

No.	Lev.	Parts No.	Description	Q'ty (A)	(B)	(C)	(D)	(E)	(F)	I	R
1	1	172A78-64510	SPACER, VALVE	2							
2	1	172B11-74850	VALVE ASSY,R	1							
3	2	172441-74030	BOOT	1							
4	2	172441-74040	LEVER KIT	1							
5	2	172463-74530	CARDAN KIT	1							
6	2	172463-74540	PLATE, RETAINING	1							
7	2	172463-74551	PLUNGER KIT	1							
8	2	172463-74561	REGULATION KIT	4							
9	2	172463-74570	SPRING KIT	1							
10	2	172B11-74860	HANDLE ASSY	1							
11	1	172A69-74900	VALVE ASSY,L	1							
12	2	172441-74030	BOOT	1							
13	2	172441-74040	LEVER KIT	1							
14	2	172463-74530	CARDAN KIT	1							
15	2	172463-74540	PLATE, RETAINING	1							
16	2	172463-74551	PLUNGER KIT	1							
17	2	172463-74561	REGULATION KIT	4							
18	2	172463-74570	SPRING KIT	1							
19	2	172A69-74910	HANDLE	1							
20	1	172123-76121	ADAPTER	10							
21	1	172455-76220	CONNECTOR	2							
22	1	26014-060162	BOLT, M6X 16	4							
23	1	26014-060162	BOLT, M6X 16	6							
24	1	41851-000110	O-RING	12							

N:Old $\xleftarrow[\text{No}]{\text{Yes}}$ New, Q:Old $\xleftarrow[\text{Yes}]{\text{No}}$ New, R:Old $\xleftarrow[\text{Yes}]{\text{Yes}}$ New, S:Old $\xleftarrow[\text{No}]{\text{No}}$ New, W:Add, Z:Discontinued, F:Interchangeable by set, K:Q'ty Change

Copyright (C) 2015 YANMAR CO., LTD. All RightsReserved.

Fig.117. OIL COOLER

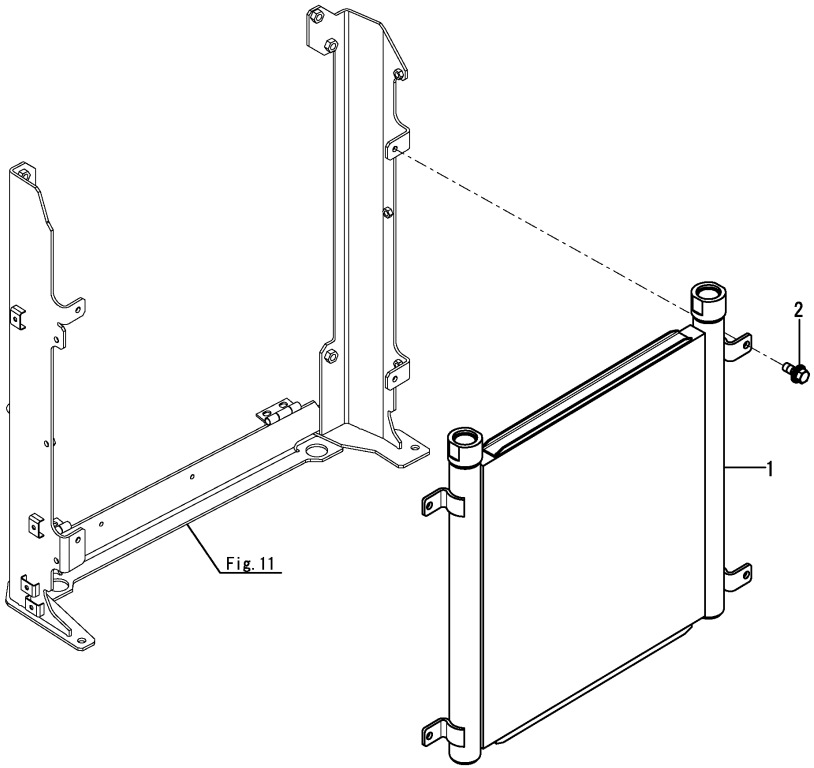

(A)=SV100-2A C(US)
(B)=
(C)=
(D)=
(E)=
(F)=

No.	Lev.	Parts No.	Description	Q'ty (A)	(B)	(C)	(D)	(E)	(F)	I	R
1	1	172B12-74800	COOLER ASSY, OIL	1							
2	1	26014-080202	BOLT, M8X 20	4							

N:Old $\xleftrightarrow[\text{No}]{\text{Yes}}$ New, Q:Old $\xleftrightarrow[\text{Yes}]{\text{No}}$ New, R:Old $\xleftrightarrow[\text{Yes}]{\text{Yes}}$ New, S:Old $\xleftrightarrow[\text{No}]{\text{No}}$ New, W:Add, Z:Discontinued, F:Interchangeable by set, K:Q'ty Change

Copyright (C) 2015 YANMAR CO., LTD. All RightsReserved.

Fig.118. HYD. OIL TANK

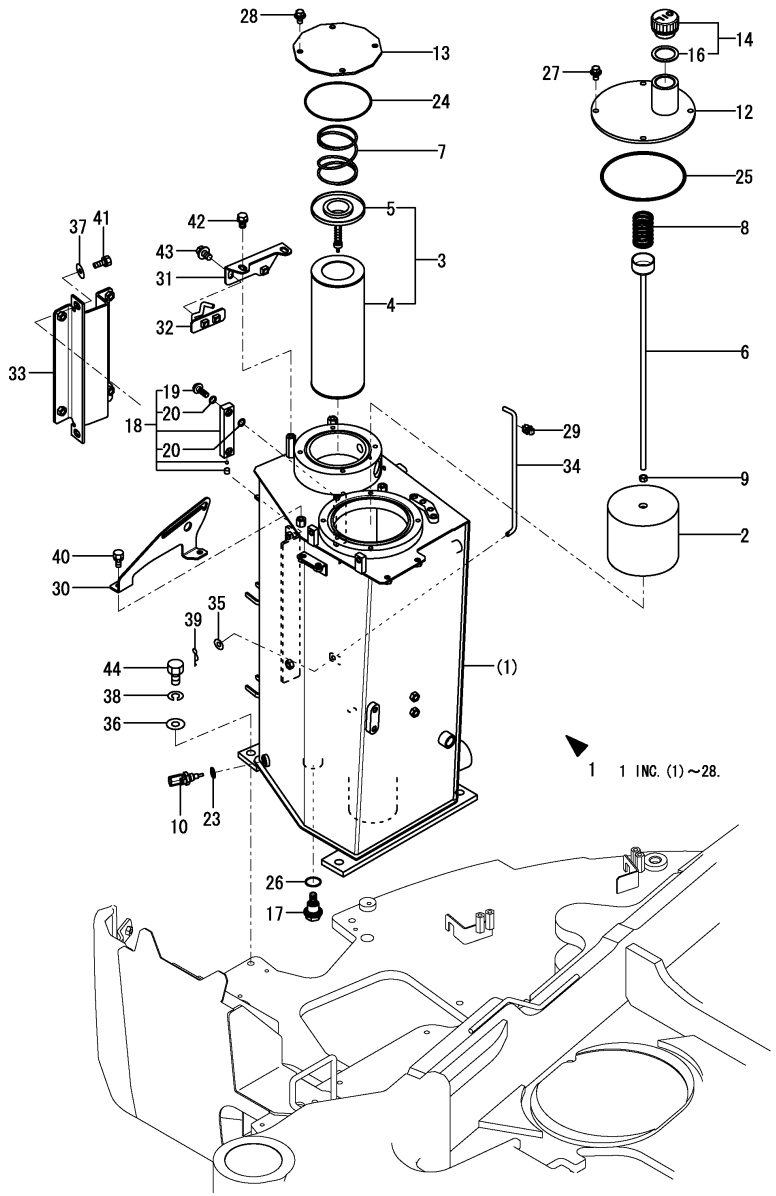

(A)=SV100-2A C(US)
(B)=
(C)=
(D)=
(E)=
(F)=

No.	Lev.	Parts No.	Description	Q'ty (A)	(B)	(C)	(D)	(E)	(F)	I	R
1	1	772B11-75100	RESERVOIR SET	1							
2	2	172162-73700	STRAINER, SUCTION	1							
3	2	172B11-73700	FILTER ASSY, RETURN	1							
4	3	172B11-73710	ELEMENT,RETURN	1							
5	3	172112-74971	VALVE, BY-PASS	1							
6	2	172A69-75710	ROD ASSY, FILTER	1							
7	2	172112-75770	SPRING, FILTER	1							
8	2	172112-75780	SPRING, FILTER	1							
9	2	26716-100002	NUT, M10	1							
10	2	129927-44900	SENSOR, WATER TEMP.	1							
12	2	172A69-75240	COVER ASSY	1							
13	2	172187-75340-2	COVER, TANK	1							1
14	2	172A69-75450	CAP, RESERVER	1							
16	3	172A69-75470	PACKING	1							
17	2	172187-75500	PLUG	1							
18	2	172A69-75600	GAUGE, OIL LEVEL	1							
19	3	172455-75290	BOLT	2							
20	3	172455-75300	O-RING	4							
23	2	22190-120002	WASHER, SEAL 12	1							
24	2	24321-001350	O-RING, 1AG135.0	1							
25	2	24321-001700	O-RING, 1AG170.0	1							
26	2	24341-000300	O-RING, 1AS30.0	1							
27	2	26014-100202	BOLT, M10X 20	4							
28	1	26014-100202	BOLT, M10X 20	4							
28A	1	172437-03322	LABEL, RESEVOIR	1							2
29	1	1A7400-61250	HOLDER, ROD 8	1							
30	1	172A89-62550	GUIDE, STOPPER	1							
31	1	172B11-62570	STAY ASSY	1							
32	1	172A89-62610	CATCH ASSY, LOCK	1							
33	1	172B11-65720	HINGE ASSY	1							
34	1	172B11-65780	HOOK,BONNET R	1							
35	1	22137-080000	WASHER, 8	1							
36	1	22137-160000	WASHER, 16	4							
37	1	22157-100000	WASHER, 10	2							
38	1	22217-160000	WASHER, SPRING 16	4							
39	1	22372-080000	PIN, SNAP 8	1							
40	1	26013-100162	BOLT, SPRING M10X 16	2							
41	1	26013-100252	BOLT, SPRING M10X 25	2							
42	1	26014-100162	BOLT, M10X 16	2							
43	2	26014-100202	BOLT, M10X 20	2							
44	1	26116-160352	BOLT, M16X 35 PLATED	4							

Remarks
(1)Attach the No.28A label to this part.
(2)Label is not illustrated.

N:Old $\xleftarrow[\text{No}]{\text{Yes}}$ New, Q:Old $\xleftarrow[\text{Yes}]{\text{No}}$ New, R:Old $\xleftarrow[\text{Yes}]{\text{Yes}}$ New, S:Old $\xleftarrow[\text{No}]{\text{No}}$ New, W:Add, Z:Discontinued, F:Interchangeable by set, K:Q'ty Change

Copyright (C) 2015 YANMAR CO., LTD. All RightsReserved.

Fig.119. PUMP & OIL COOLER(FITTING)

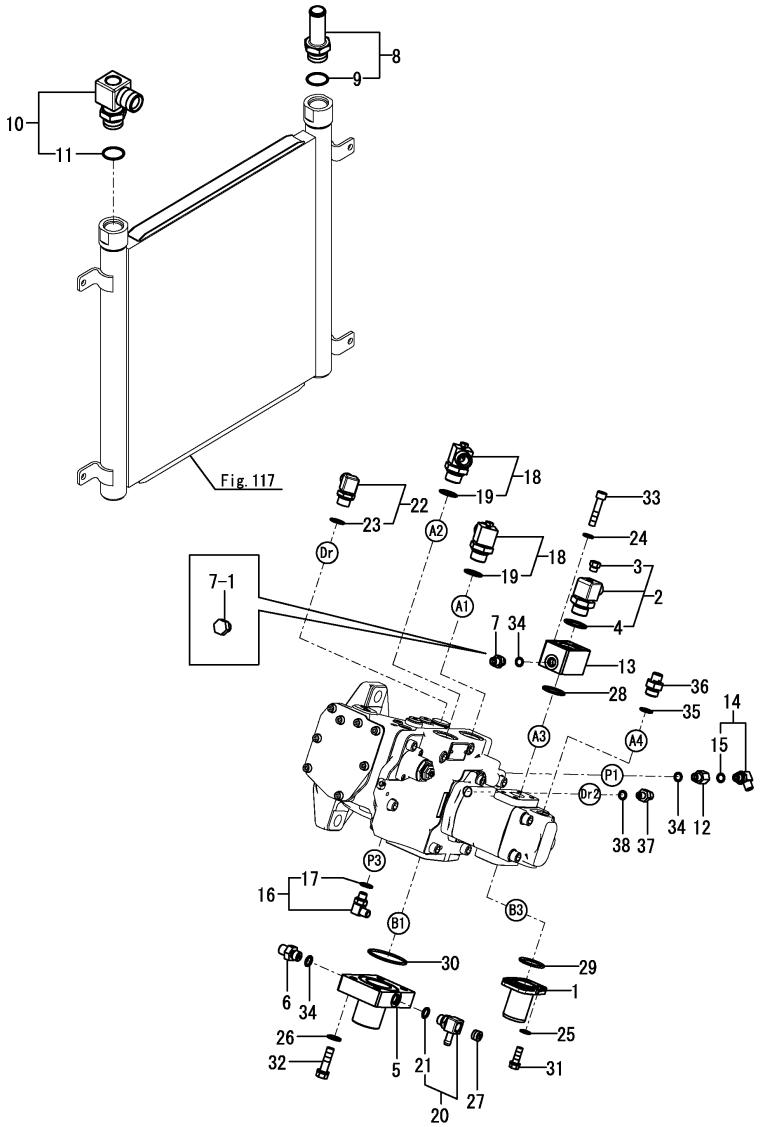

(A)=SV100-2A C(US)
(B)=
(C)=
(D)=
(E)=
(F)=

No.	Lev.	Parts No.	Description	Q'ty (A)	(B)	(C)	(D)	(E)	(F)	I	R
1	1	172422-76100	FLANGE	1							
2	1	172A89-76110	ELBOW	1							
3	2	172A89-76120	PLUG, SCREW PT1/8	1							
4	2	41851-000240	O-RING	1							
5	1	172B12-76110	FLANGE ASSY	1							
6	1	172123-76121	ADAPTER	1							
7	1	172123-76121	ADAPTER	1							
7-1	1	172165-76590	PLUG	1						S	
	(A=M20901)										
8	1	172A69-76120	NIPPLE	1							
9	2	172A65-76790	O-RING	1							
10	1	172A69-76130	ELBOW	1							
11	2	172A65-76790	O-RING	1							
12	1	172422-76140	CONNECTOR	1							
13	1	172B12-76150	FLANGE, 3/4	1							
14	1	172141-76181	CONNECTOR ASSY, 02FF	1							
15	2	41851-000110	O-RING	1							
16	1	172141-76181	CONNECTOR ASSY, 02FF	1							
17	2	41851-000110	O-RING	1							
18	1	172187-76191	ELBOW, ADJUST	2							
19	2	41851-000240	O-RING	2							
20	1	172A69-76190	ELBOW	1							
21	2	41851-000140	O-RING	1							
22	1	172141-76900	CONNECTOR ASSY	1							
23	2	24315-000180	O-RING, 1BP18.0	1							
24	1	22117-100000	WASHER, 10	4							
25	1	22117-100000	WASHER, 10	4							
26	1	22137-120000	WASHER, 12	4							
27	1	23871-030000	PLUG, R03	1							
28	1	24325-000350	O-RING, 1BG35.0	1							
29	1	24325-000400	O-RING, 1BG40.0	1							
30	1	24325-000650	O-RING, 1BG65.0	1							
31	1	26013-100302	BOLT, SPRING M10X 30	4							
32	1	26013-120452	BOLT, SPRING M12X 45	4							
33	1	26450-100502	BOLT, M10X 50	4							
34	1	41851-000110	O-RING	3							
35	1	41851-000180	O-RING	1							
36	1	933160-01370	CONNECTOR,PF1/2PF3/8	1							
37	1	172423-76120	CONNECTOR, PF1/2X1/4	1						W	
	(A=M20901)										
38	1	41851-000180	O-RING	1						W	
	(A=M20901)										

Remarks
* Hose is shown in Fig.120.

N:Old $\overset{\text{Yes}}{\underset{\text{No}}{\leftrightarrow}}$ New, Q:Old $\overset{\text{No}}{\underset{\text{Yes}}{\leftrightarrow}}$ New, R:Old $\overset{\text{Yes}}{\underset{\text{Yes}}{\leftrightarrow}}$ New, S:Old $\overset{\text{No}}{\underset{\text{No}}{\leftrightarrow}}$ New, W:Add, Z:Discontinued, F:Interchangeable by set, K:Q'ty Change

Copyright (C) 2015 YANMAR CO., LTD. All RightsReserved.

Fig.120. PUMP - CONTROL VALVE - OIL COOLER

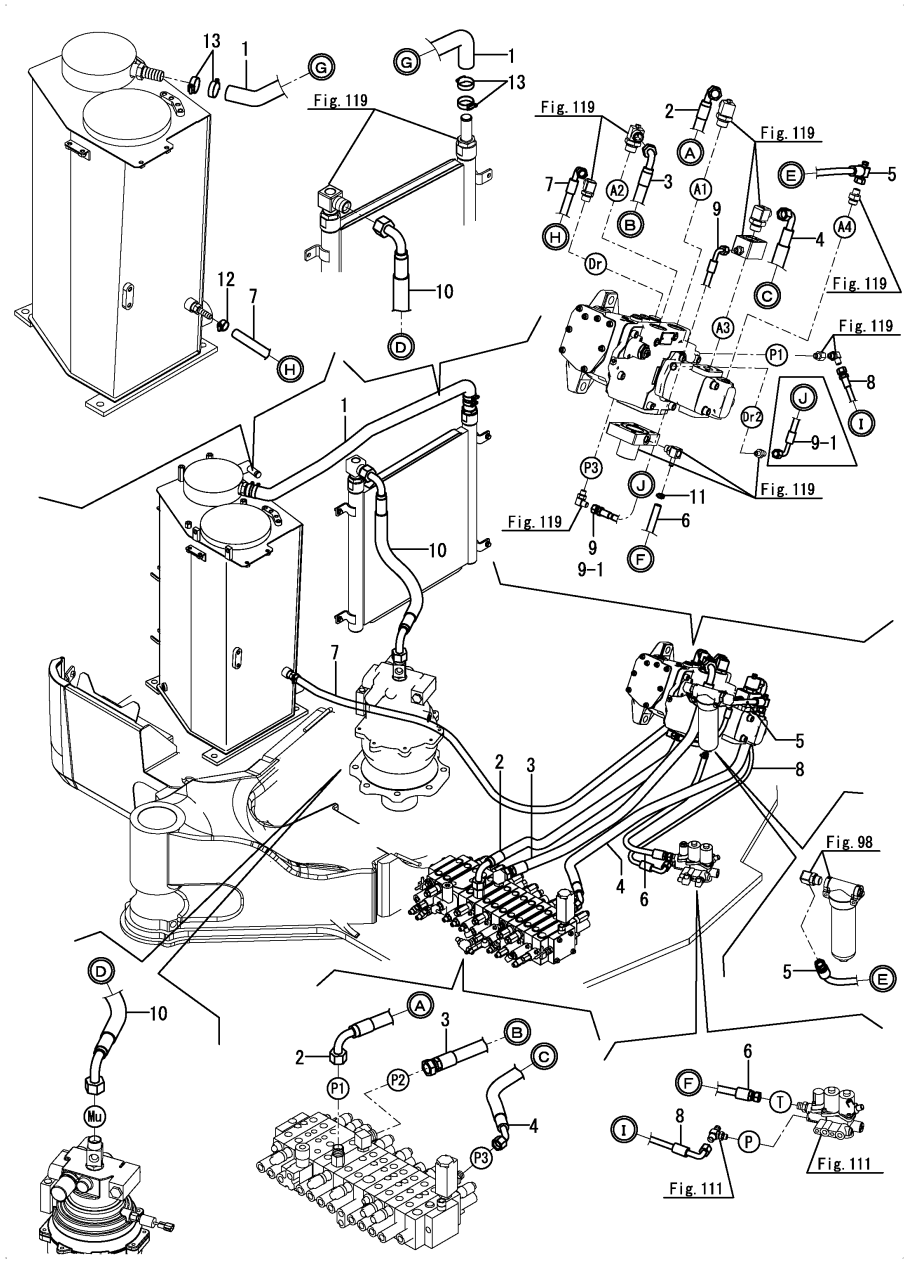

(A)=SV100-2A C(US)
(B)=
(C)=
(D)=
(E)=
(F)=

No.	Lev.	Parts No.	Description	Q'ty (A)	(B)	(C)	(D)	(E)	(F)	I	R
1	1	172B12-78130	HOSE, 25.4	1							
2	1	172B12-78150	HOSE, G112CC140S	1							
3	1	172B12-78160	HOSE, G112BC118S	1							
4	1	172B12-78170	HOSE, H108CE128S	1							
5	1	172B12-78180	HOSE, H606BZ034S	1							
6	1	172B12-78200	HOSE, G806BY067S	1							
7	1	172B12-78210	HOSE, G608CY210S	1							
8	1	172B12-78221	HOSE, H604BC105S	1							
9	1	172B12-78230	HOSE, H804BC034S	1							
9-1	1	172B12-78400	HOSE, G804CC050S	1						S	
	(A=M20901)										
10	1	172A89-78250	HOSE G616CC060	1							
11	1	23001-016000	CLAMP, HOSE 16	1							
12	1	23001-022000	CLAMP, HOSE 22	1							
13	1	23001-041000	CLAMP, HOSE 41	4							

Remarks
* Fitting(control valve) is shown in Fig.123 & 124.

N:Old ←Yes/No→ New, Q:Old ←No/Yes→ New, R:Old ←Yes/Yes→ New, S:Old ←No/No→ New, W:Add, Z:Discontinued, F:Interchangeable by set, K:Q'ty Change

Copyright (C) 2015 YANMAR CO., LTD. All RightsReserved.

Fig.121. TANK - PUMP & SWING CYLINDER

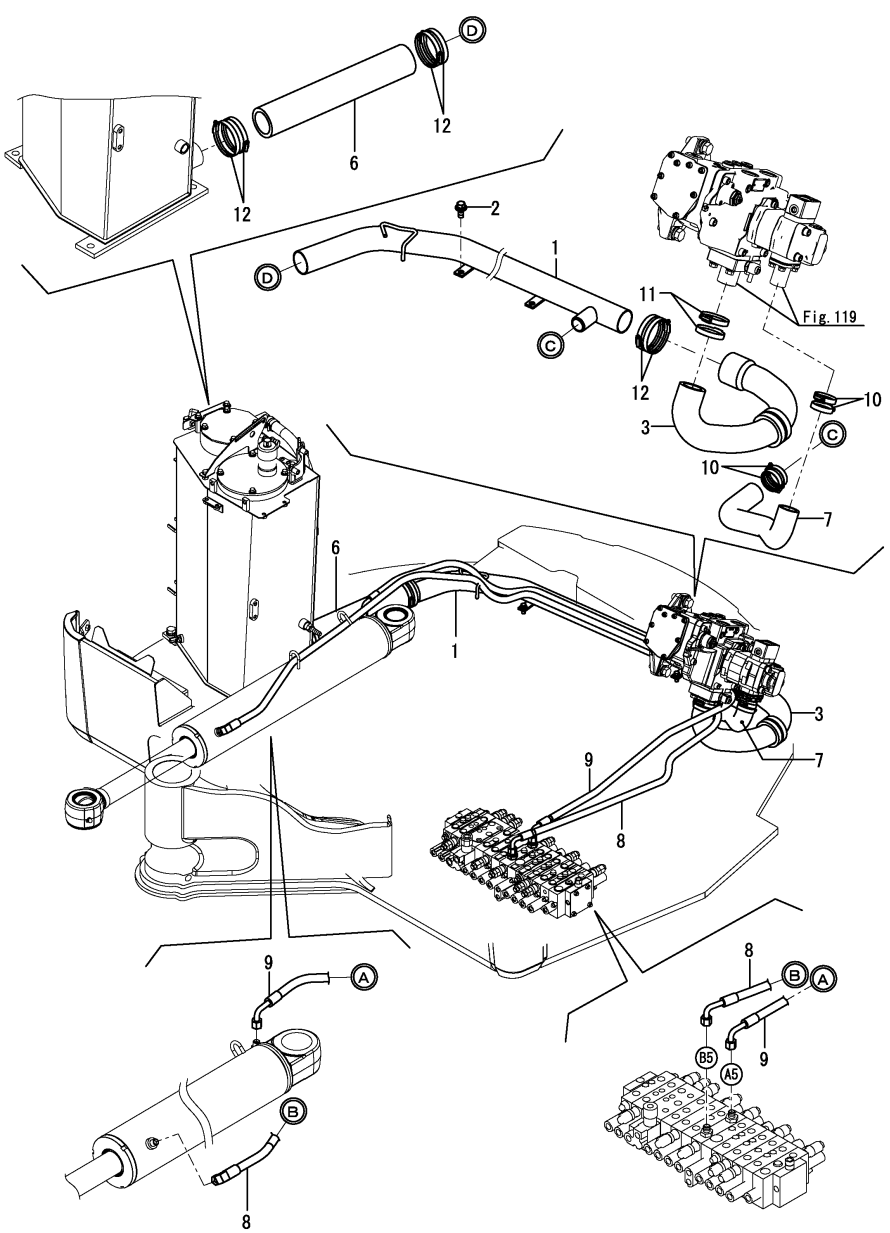

(A)=SV100-2A C(US)
(B)=
(C)=
(D)=
(E)=
(F)=

No.	Lev.	Parts No.	Description	Q'ty (A)	(B)	(C)	(D)	(E)	(F)	I	R
1	1	172B12-76470	TUBE ASSY,SUCTION	1							
2	1	26014-100252	BOLT, M10X 25	2							
3	1	172B12-78080	HOSE ASSY,47	1							
6	1	172B12-78110	HOSE,59	1							
7	1	172B12-78120	HOSE,39.5	1							
8	1	172A69-78380	HOSE	1							
9	1	172A69-78390	HOSE	1							
10	1	23001-054000	CLAMP, HOSE 54	4							
11	1	23001-070000	CLAMP, HOSE 70	2							
12	1	23001-090000	CLAMP, HOSE 90	6							

Remarks
* Fitting(control valve) is shown in Fig.123 & 124.

N:Old $\frac{\text{Yes}}{\text{No}}$ New, Q:Old $\frac{\text{No}}{\text{Yes}}$ New, R:Old $\frac{\text{Yes}}{\text{Yes}}$ New, S:Old $\frac{\text{No}}{\text{No}}$ New, W:Add, Z:Discontinued, F:Interchangeable by set, K:Q'ty Change

Copyright (C) 2015 YANMAR CO., LTD. All RightsReserved.

Fig.122. CONTROL VALVE - TURNING MOTOR

(A)=SV100-2A C(US)
(B)=
(C)=
(D)=
(E)=
(F)=

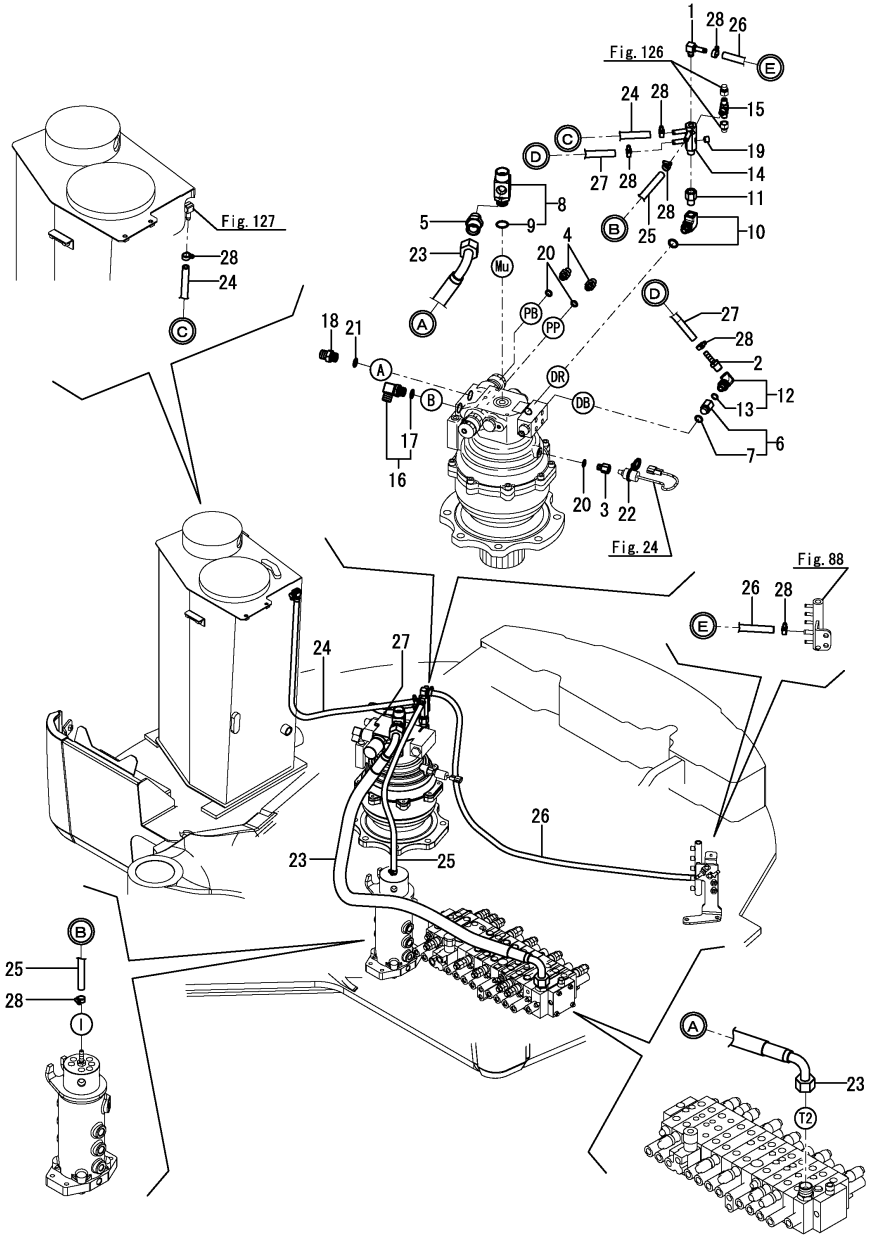

No.	Lev.	Parts No.	Description	Q'ty (A)	(B)	(C)	(D)	(E)	(F)	I	R
1	1	172155-11120	ELBOW	1							
2	1	172137-76110	NIPPLE	1							
3	1	172156-76110	CONNECTOR,PF1/4PT1/8	1							
4	1	172123-76121	ADAPTER	2							
5	1	172187-76131	CONNECTOR, PF3/4	1							
6	1	172A52-76130	ADAPTER	1							
7	2	24315-000140	O-RING, 1BP14.0	1							
8	1	172187-76141	CONNECTOR, PF1XPF3/4	1							
9	2	24315-000240	O-RING, 1BP24.0	1							
10	1	172644-76180	ELBOW, ADJUSTING	1							
11	1	172633-76200	ADAPTER	1							
12	1	172499-76300	ELBOW ASSY	1							
13	2	24315-000140	O-RING, 1BP14.0	1							
14	1	172499-76311	JOINT	1							
15	1	172162-76320	CONNECTOR, 3X1/4	1							
16	1	172141-76900	CONNECTOR ASSY	1							
17	2	24315-000180	O-RING, 1BP18.0	1							
18	1	172112-77361	CONNECTOR	1							
19	1	23871-020000	PLUG, R02	1							
20	1	41851-000110	O-RING	3							
21	1	41851-000180	O-RING	1							
22	1	172137-16560	BAND	1							
23	1	172A69-78230	HOSE	1							
24	1	172A69-78250	HOSE	1							
25	1	172A69-78261	HOSE G806YY060S	1							
26	1	172A69-78270	HOSE	1							
27	1	172A50-78860	HOSE	1							
28	1	23001-016000	CLAMP, HOSE 16	8							

Remarks
* Fitting(control valve) is shown in Fig.123 & 124.

N:Old ←Yes/No→ New, Q:Old ←No/Yes→ New, R:Old ←Yes/Yes→ New, S:Old ←No/No→ New, W:Add, Z:Discontinued, F:Interchangeable by set, K:Q'ty Change

Copyright (C) 2015 YANMAR CO., LTD. All RightsReserved.

Fig.123. CONTROL VALVE(FITTING)(1)

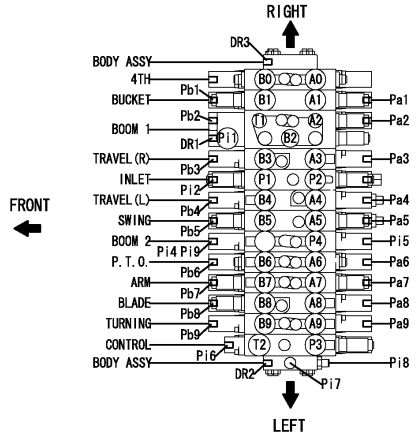

CONTROL VALVE

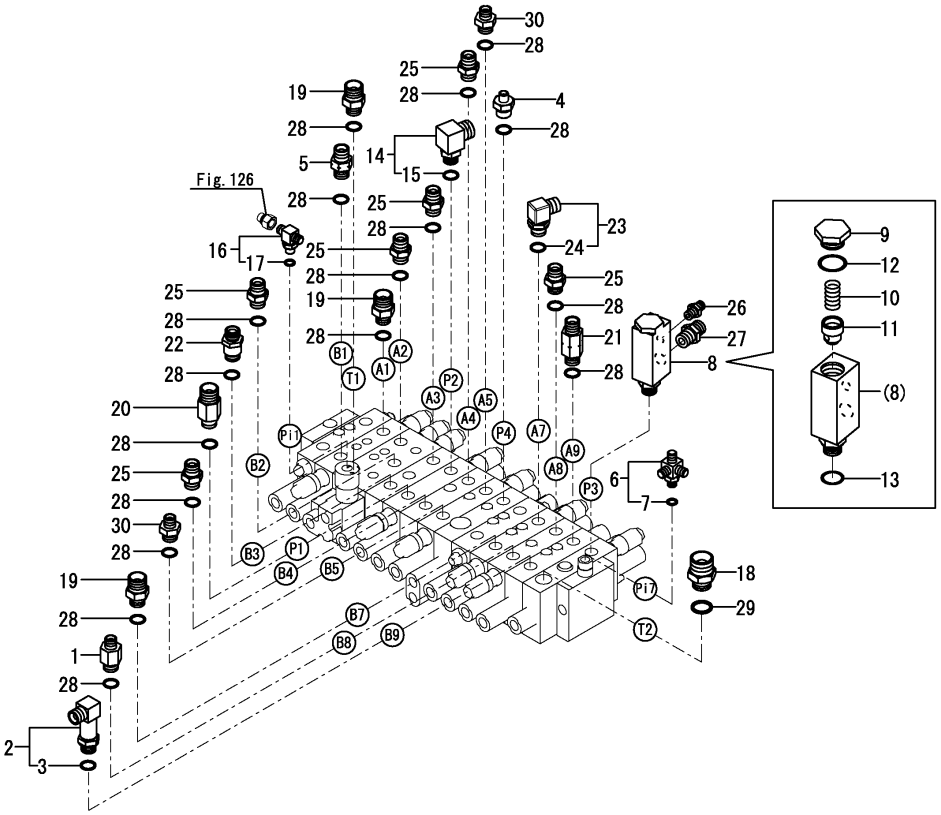

(A)=SV100-2A C(US) (D)=
(B)= (E)=
(C)= (F)=

No.	Lev.	Parts No.	Description	Q'ty (A)	(B)	(C)	(D)	(E)	(F)	I	R
1	1	172423-76100	CONNECTOR,PF1/2PF3/8	1							
2	1	172524-76110	ELBOW	1							
3	2	24315-000180	O-RING, 1BP18.0	1							
4	1	172423-76120	CONNECTOR, PF1/2X1/4	1							
5	1	172423-76140	CONNECTOR, 1/2X1/2	1							
6	1	172491-76140	JOINT	1							
7	2	24315-000110	O-RING, 1BP11.0	1							
8	1	172A69-76150	ELBOW	1							
9	2	172A69-76050	PLUG	1							
10	2	172A69-76060	SPRING	1							
11	2	172A69-76070	VALVE, POPPET	1							
12	2	24315-000240	O-RING, 1BP24.0	1							
13	2	41851-000180	O-RING	1							
14	1	172151-76161	ELBOW ASSY	1							
15	2	24315-000180	O-RING, 1BP18.0	1							
16	1	172187-76170	TEE, ADJUSTABLE	1							
17	2	24315-000110	O-RING, 1BP11.0	1							
18	1	172151-76200	JOINT	1							
19	1	172187-76200	ADAPTER, 1/2-3/4	3							
20	1	172455-76200	CONNECTOR	1							
21	1	172176-76210	JOINT, PF1/2	1							
22	1	172147-76271	CONNECTOR, 1/2X1/2	1							
23	1	172141-76900	CONNECTOR ASSY	1							
24	2	24315-000180	O-RING, 1BP18.0	1							
25	1	172112-77361	CONNECTOR	6							
26	1	23391-020000	JOINT, RGI-1/4	1							
27	1	23391-040000	JOINT, RGI-1/2	1							
28	1	41851-000180	O-RING	17							
29	1	41851-000240	O-RING	1							
30	1	933160-01370	CONNECTOR,PF1/2PF3/8	2							

N:Old $\frac{\text{Yes}}{\text{No}}$ New, Q:Old $\frac{\text{No}}{\text{Yes}}$ New, R:Old $\frac{\text{Yes}}{\text{Yes}}$ New, S:Old $\frac{\text{No}}{\text{No}}$ New, W:Add, Z:Discontinued, F:Interchangeable by set, K:Q'ty Change

Copyright (C) 2015 YANMAR CO., LTD. All RightsReserved.

Fig.124. CONTROL VALVE(FITTING)(2)

(A)=SV100-2A C(US)
(B)=
(C)=
(D)=
(E)=
(F)=

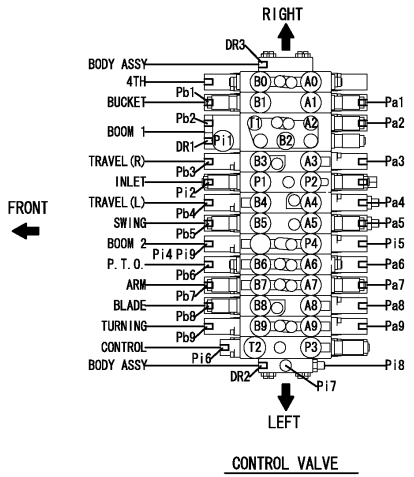

CONTROL VALVE

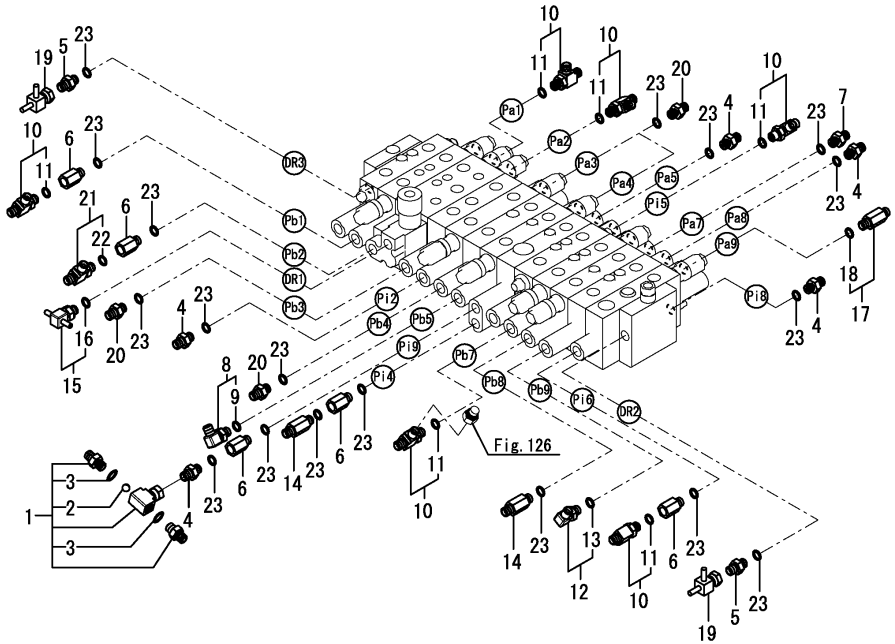

No.	Lev.	Parts No.	Description	Q'ty (A)	(B)	(C)	(D)	(E)	(F)	I	R
1	1	172A86-74500	VALVE, SHUTTLE	1							
2	2	24190-140001	BALL, STEEL 7/16	1							
3	2	41851-000110	O-RING	2							
4	1	172123-76121	ADAPTER	5							
5	1	172123-76121	ADAPTER	2							
6	1	172422-76140	CONNECTOR	5							
7	1	172A47-76171	CONNECTOR, G1/4X0.6	1							
8	1	172141-76181	CONNECTOR ASSY, 02FF	1							
9	2	41851-000110	O-RING	1							
10	1	172162-76181	JOINT ASSY	6							
11	2	41851-000110	O-RING	6							
12	1	172A47-76180	ELBOW	1							
13	2	41851-000110	O-RING	1							
14	1	172183-76200	CONNECTOR	2							
15	1	172A47-76230	NIPPLE, TEE	1							
16	2	41851-000110	O-RING	1							
17	1	172A47-76290	CONNECTOR	1							
18	2	41851-000110	O-RING	1							
19	1	172A47-76320	NIPPLE	2							
20	1	172164-76330	JOINT, PF1/4-0.7	4							
21	1	172164-76700	JOINT ASSY	1							
22	2	24315-000110	O-RING, 1BP11.0	1							
23	1	41851-000110	O-RING	19							

N:Old $\frac{\text{Yes}}{\text{No}}$ New, Q:Old $\frac{\text{No}}{\text{Yes}}$ New, R:Old $\frac{\text{Yes}}{\text{Yes}}$ New, S:Old $\frac{\text{No}}{\text{No}}$ New, W:Add, Z:Discontinued, F:Interchangeable by set, K:Q'ty Change

Copyright (C) 2015 YANMAR CO., LTD. All RightsReserved.

Fig.125. CONTROL VALVE(FITTING)(P.T.O.)

(A)=SV100-2A C(US)
(B)=
(C)=
(D)=
(E)=
(F)=

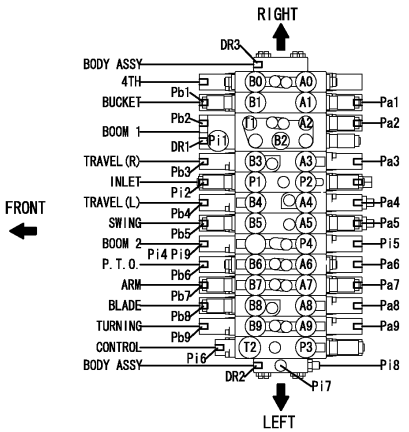

CONTROL VALVE

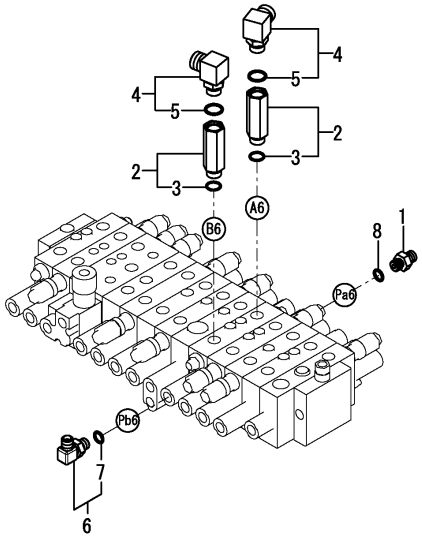

No.	Lev.	Parts No.	Description	Q'ty (A)	(B)	(C)	(D)	(E)	(F)	I	R
1	1	172123-76121	ADAPTER	1							
2	1	172A21-76120	ADAPTER	2							
3	2	41851-000180	O-RING	2							
4	1	172151-76161	ELBOW ASSY	2							
5	2	24315-000180	O-RING, 1BP18.0	2							
6	1	172141-76181	CONNECTOR ASSY, 02FF	1							
7	2	41851-000110	O-RING	1							
8	1	41851-000110	O-RING	1							

N:Old $\xleftrightarrow[\text{No}]{\text{Yes}}$ New, Q:Old $\xleftrightarrow[\text{Yes}]{\text{No}}$ New, R:Old $\xleftrightarrow[\text{Yes}]{\text{Yes}}$ New, S:Old $\xleftrightarrow[\text{No}]{\text{No}}$ New, W:Add, Z:Discontinued, F:Interchangeable by set, K:Q'ty Change

Copyright (C) 2015 YANMAR CO., LTD. All RightsReserved.

Fig.126. SCREW CAP

(A)=SV100-2A C(US) (D)=
(B)= (E)=
(C)= (F)=

No.	Lev.	Parts No.	Description	Q'ty (A)	(B)	(C)	(D)	(E)	(F)	I	R
1	1	1E3030-78370	CAP, SCREW	4							

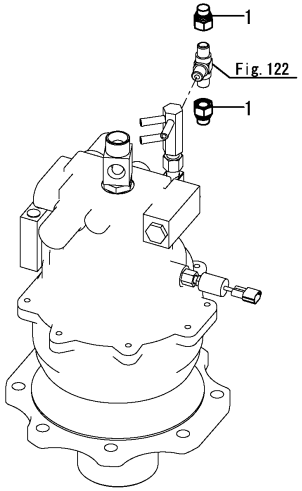

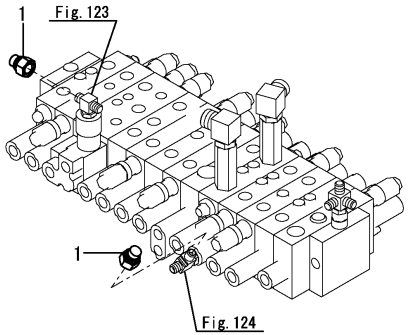

Remarks
* Fitting(control valve) is shown in Fig.123, 124 & 125.

N:Old $\xleftarrow[\text{No}]{\text{Yes}}$ New, Q:Old $\xleftarrow[\text{Yes}]{\text{No}}$ New, R:Old $\xleftarrow[\text{Yes}]{\text{Yes}}$ New, S:Old $\xleftarrow[\text{No}]{\text{No}}$ New, W:Add, Z:Discontinued, F:Interchangeable by set, K:Q'ty Change

Copyright (C) 2015 YANMAR CO., LTD. All RightsReserved.

Fig.127. CONTROL VALVE - BOOM, TURNING MOTOR & TANK

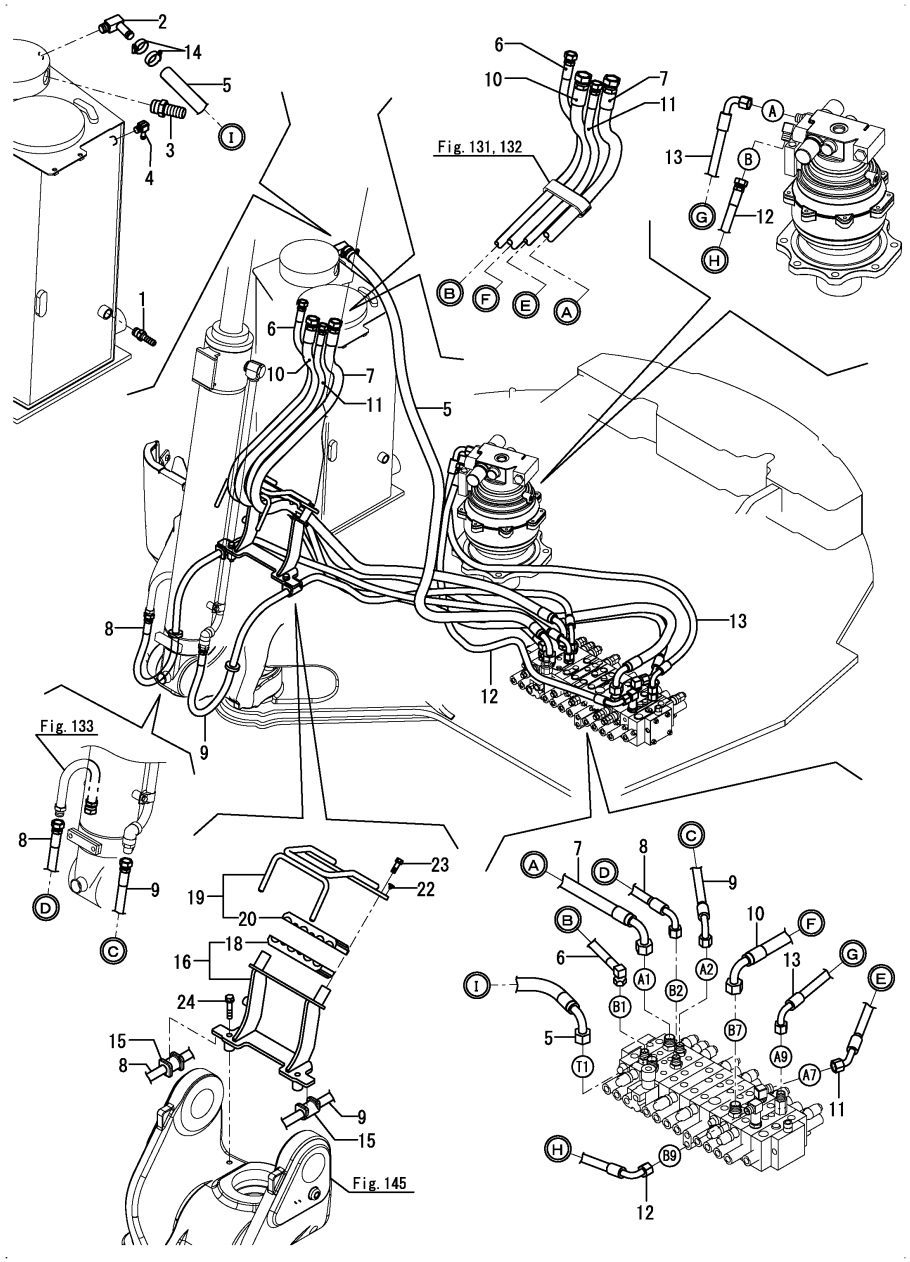

(A)=SV100-2A C(US)
(B)=
(C)=
(D)=
(E)=
(F)=

No.	Lev.	Parts No.	Description	Q'ty (A)	(B)	(C)	(D)	(E)	(F)	I	R
1	1	172168-76170	CONNECTOR	1							
2	1	172A89-76170	ELBOW, 90 1/2	1							
3	1	172187-76180	NIPPLE, HOSE	1							
4	1	172168-76370	ELBOW	1							
5	1	172A69-78220	HOSE	1							
6	1	172A69-78300	HOSE	1							
7	1	172A69-78310	HOSE	1							
8	1	172A69-78320	HOSE	1							
9	1	172A69-78330	HOSE	1							
10	1	172A69-78430	HOSE	1							
11	1	172A69-78440	HOSE	1							
12	1	172A69-78470	HOSE	1							
13	1	172A69-78480	HOSE	1							
14	1	23001-035000	CLAMP, HOSE 35	2							
15	1	172187-78100	RUBBER	2							
16	1	172A69-79100-Y	CLAMP ASSY, HOSE	1							
18	2	172A69-79140	SUPPORT, RUBBER	1							
19	1	172A69-79150-Y	PLATE ASSY, CLAMP	1							
20	2	172A69-79140	SUPPORT, RUBBER	1							
22	1	172183-81160	CLIP, TREE	4							
23	1	26013-100302	BOLT, SPRING M10X 30	2							
24	1	26013-120602	BOLT, SPRING M12X 60	2							

Remarks
* Fitting(control valve) is shown in Fig.123 & 124.

N:Old $\frac{\text{Yes}}{\text{No}}$ New, Q:Old $\frac{\text{No}}{\text{Yes}}$ New, R:Old $\frac{\text{Yes}}{\text{Yes}}$ New, S:Old $\frac{\text{No}}{\text{No}}$ New, W:Add, Z:Discontinued, F:Interchangeable by set, K:Q'ty Change

Copyright (C) 2015 YANMAR CO., LTD. All RightsReserved.

Fig.128. CONTROL VALVE - SWIVEL JOINT

(A)=SV100-2A C(US)
(B)=
(C)=
(D)=
(E)=
(F)=

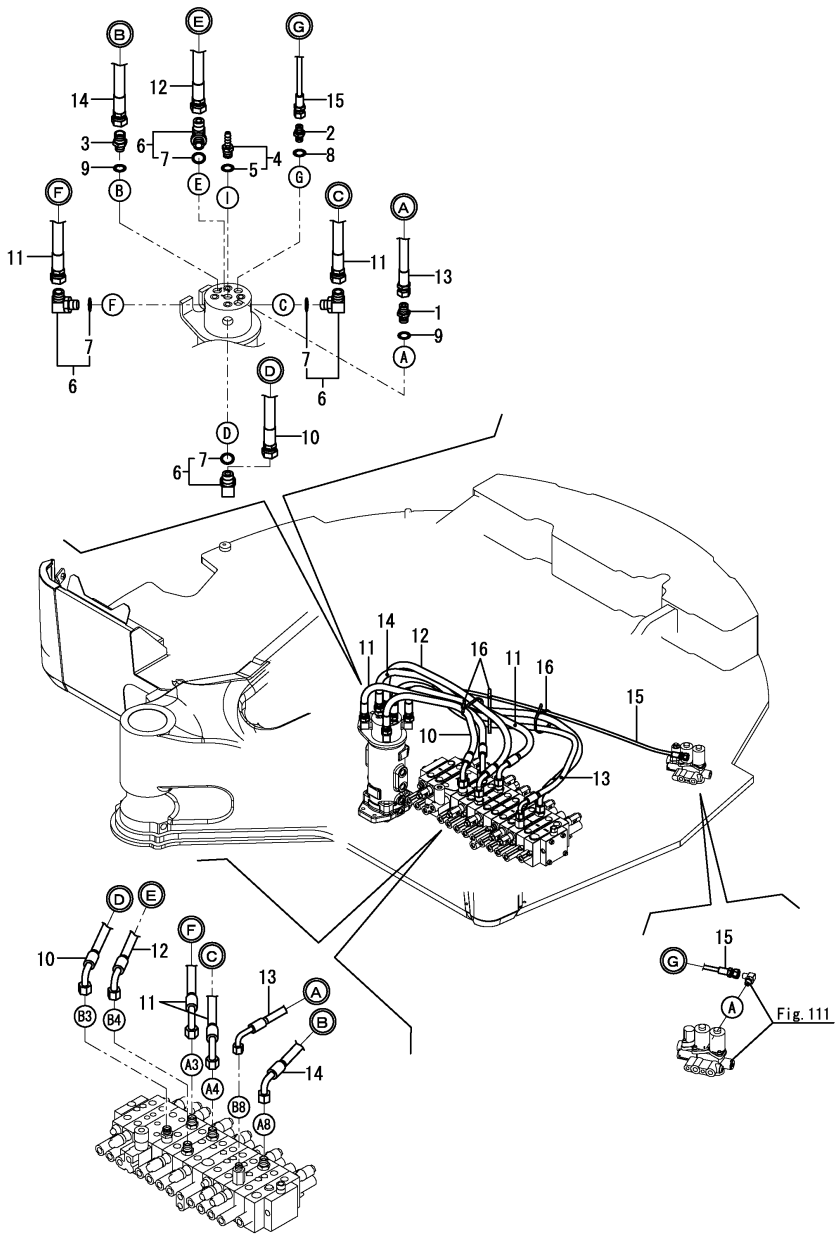

No.	Lev.	Parts No.	Description	Q'ty (A)	(B)	(C)	(D)	(E)	(F)	I	R
1	1	172730-75141	ADAPTER	1							
2	1	172123-76121	ADAPTER	1							
3	1	172168-76162	CONNECTOR, PF1/2X3/8	1							
4	1	172A65-76700	CONNECTOR, G3/8	1							
5	2	41851-000140	O-RING	1							
6	1	172141-76900	CONNECTOR ASSY	4							
7	2	24315-000180	O-RING, 1BP18.0	4							
8	1	41851-000110	O-RING	1							
9	1	41851-000140	O-RING	2							
10	1	172A69-78340	HOSE	1							
11	1	172A69-78350	HOSE	2							
12	1	172A69-78360	HOSE	1							
13	1	172A69-78450	HOSE	1							
14	1	172A69-78460	HOSE	1							
15	1	172A69-78900	HOSE	1							
16	1	172122-79890	CLAMP, HOSE	3							

Remarks
* Fitting(control valve) is shown in Fig.123 & 124.

N:Old $\frac{\text{Yes}}{\text{No}}$ New, Q:Old $\frac{\text{No}}{\text{Yes}}$ New, R:Old $\frac{\text{Yes}}{\text{Yes}}$ New, S:Old $\frac{\text{No}}{\text{No}}$ New, W:Add, Z:Discontinued, F:Interchangeable by set, K:Q'ty Change

Copyright (C) 2015 YANMAR CO., LTD. All RightsReserved.

Fig.129. TRAVEL FRAME

(A)=SV100-2A C(US)
(B)=
(C)=
(D)=
(E)=
(F)=

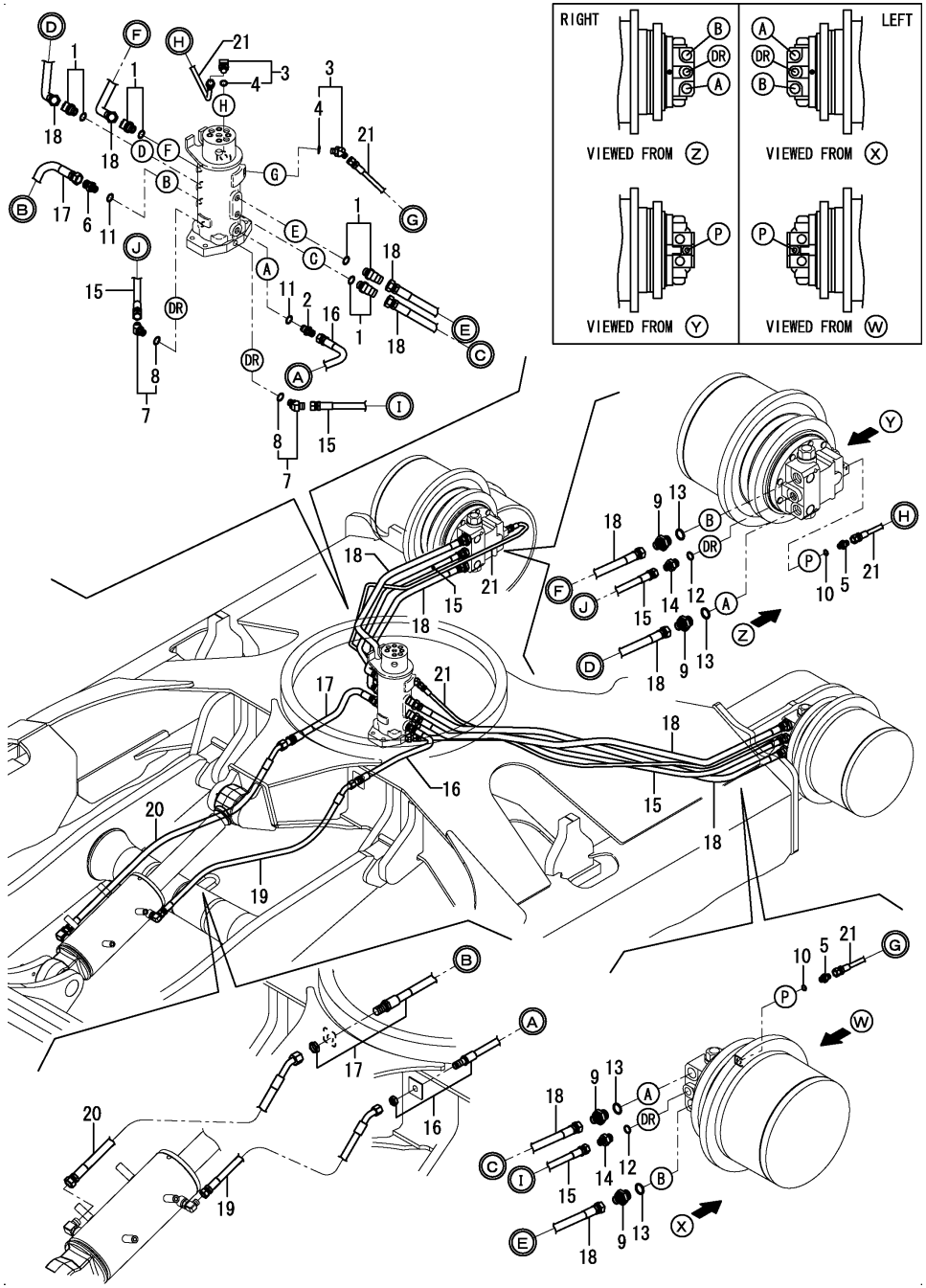

No.	Lev.	Parts No.	Description	Q'ty (A)	(B)	(C)	(D)	(E)	(F)	I	R
1	1	1D4180-22850	ELBOW, 45 PF1/2	4							
2	1	172730-75141	ADAPTER	1							
3	1	172173-76102	CONNECTOR ASSY	2							
4	2	41851-000110	O-RING	2							
5	1	172123-76121	ADAPTER	2							
6	1	172168-76162	CONNECTOR, PF1/2X3/8	1							
7	1	172644-76161	ELBOW, ADJUST	2							
8	2	24315-000140	O-RING, 1BP14.0	2							
9	1	172499-76200	JOINT	4							
10	1	41851-000110	O-RING	2							
11	1	41851-000140	O-RING	2							
12	1	41851-000180	O-RING	2							
13	1	41851-000240	O-RING	4							
14	1	933160-01370	CONNECTOR,PF1/2PF3/8	2							
15	1	172187-78211	HOSE	2							
16	1	172A69-78510	HOSE	1							
17	1	172A69-78520	HOSE	1							
18	1	172499-78530	HOSE	4							
19	1	172A69-78530	HOSE	1							
20	1	172A69-78540	HOSE	1							
21	1	172A69-78560	HOSE	2							

N:Old $\xleftarrow[\text{No}]{\text{Yes}}$ New, Q:Old $\xleftarrow[\text{Yes}]{\text{No}}$ New, R:Old $\xleftarrow[\text{Yes}]{\text{Yes}}$ New, S:Old $\xleftarrow[\text{No}]{\text{No}}$ New, W:Add, Z:Discontinued, F:Interchangeable by set, K:Q'ty Change

Copyright (C) 2015 YANMAR CO., LTD. All RightsReserved.

Fig.130. BOOM (1)

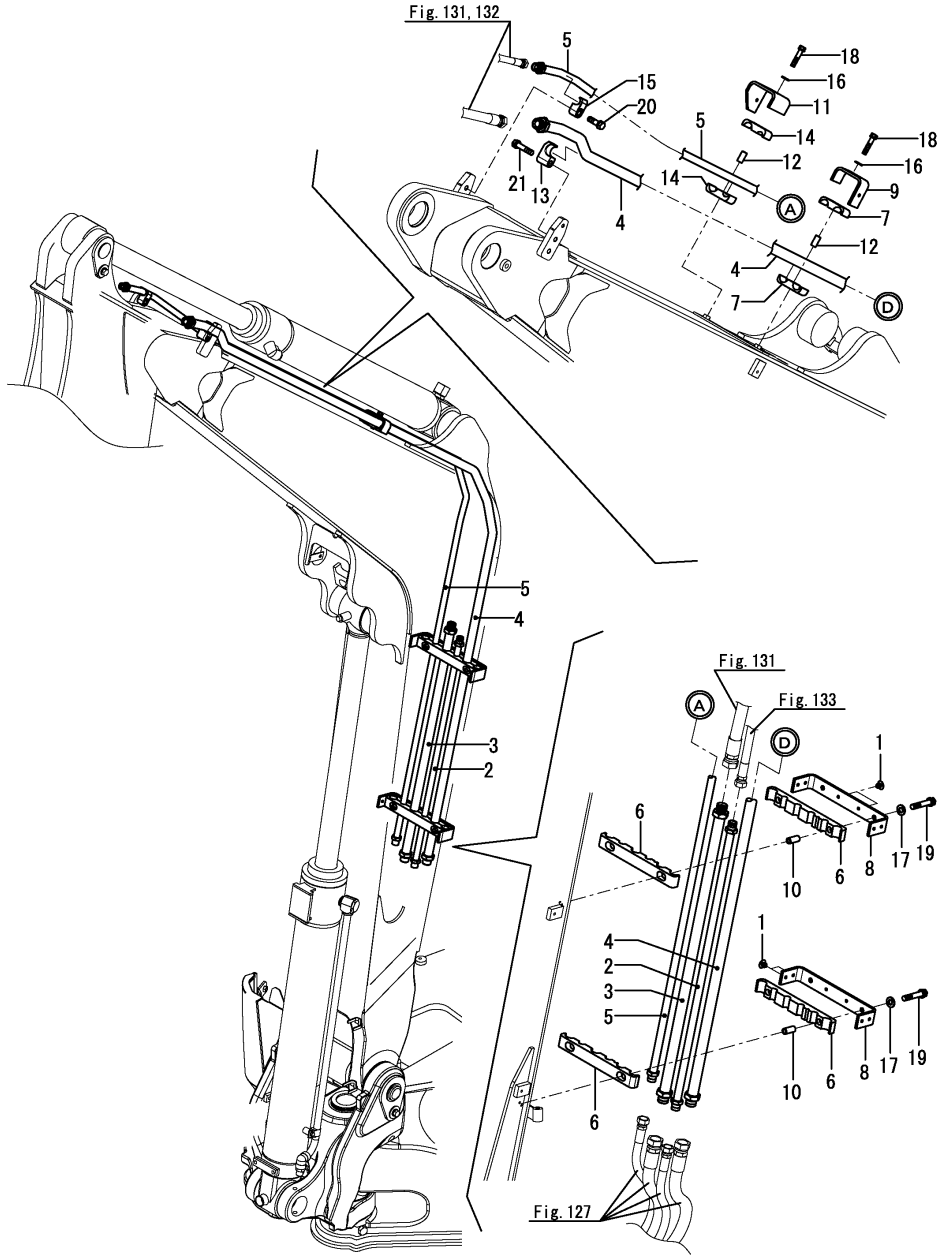

(A)=SV100-2A C(US) (D)=
(B)= (E)=
(C)= (F)=

No.	Lev.	Parts No.	Description	Q'ty (A)	(B)	(C)	(D)	(E)	(F)	I	R
1	1	172444-17660	CLIP, TREE	6							
1-1	1	172B11-76900	CLIP, TREE 8	6						N	
	(A=*2015.07.)										
2	1	172A69-76200-Y	TUBE ASSY, ARM	1							
3	1	172A69-76220-Y	TUBE ASSY, ARM	1							
4	1	172B12-76250	TUBE ASSY, BUCKET L	1							
5	1	172A69-76270-Y	TUBE ASSY, BUCKET	1							
6	1	172A69-76400	CLAMP, RUBBER	4							
7	1	172A69-76410	CLAMP, RUBBER	2							
8	1	172B11-76420	CLAMP,TUBE A	2							
9	1	172B12-76440	CLAMP,TUBE B	1							
10	1	172A69-76450	COLLAR, CLAMP	4							
11	1	172B11-76460	CLAMP, TUBE Q PTO2	1							
12	1	172187-76520	COLLAR, CLAMP	2							
13	1	172142-76940-Y	CLAMP	1							
14	1	172187-76940	RUBBER	2							
15	1	172142-76950-Y	CLAMP, 1/2	1							
16	1	22137-100000	WASHER, 10	2							
17	1	22137-100000	WASHER, 10	4							
18	1	26013-100502	BOLT, SPRING M10X 50	2							
19	1	26013-100552	BOLT, SPRING M10X 55	4							
20	1	26013-120402	BOLT, SPRING M12X 40	1							
21	1	26013-120552	BOLT, SPRING M12X 55	1							

N:Old $\frac{\text{Yes}}{\text{No}}$ New, Q:Old $\frac{\text{No}}{\text{Yes}}$ New, R:Old $\frac{\text{Yes}}{\text{Yes}}$ New, S:Old $\frac{\text{No}}{\text{No}}$ New, W:Add, Z:Discontinued, F:Interchangeable by set, K:Q'ty Change

Copyright (C) 2015 YANMAR CO., LTD. All RightsReserved.

Fig.131. BOOM (2)(STANDARD ARM SPEC.)

(A)=SV100-2A C(US)
(B)=
(C)=
(D)=
(E)=
(F)=

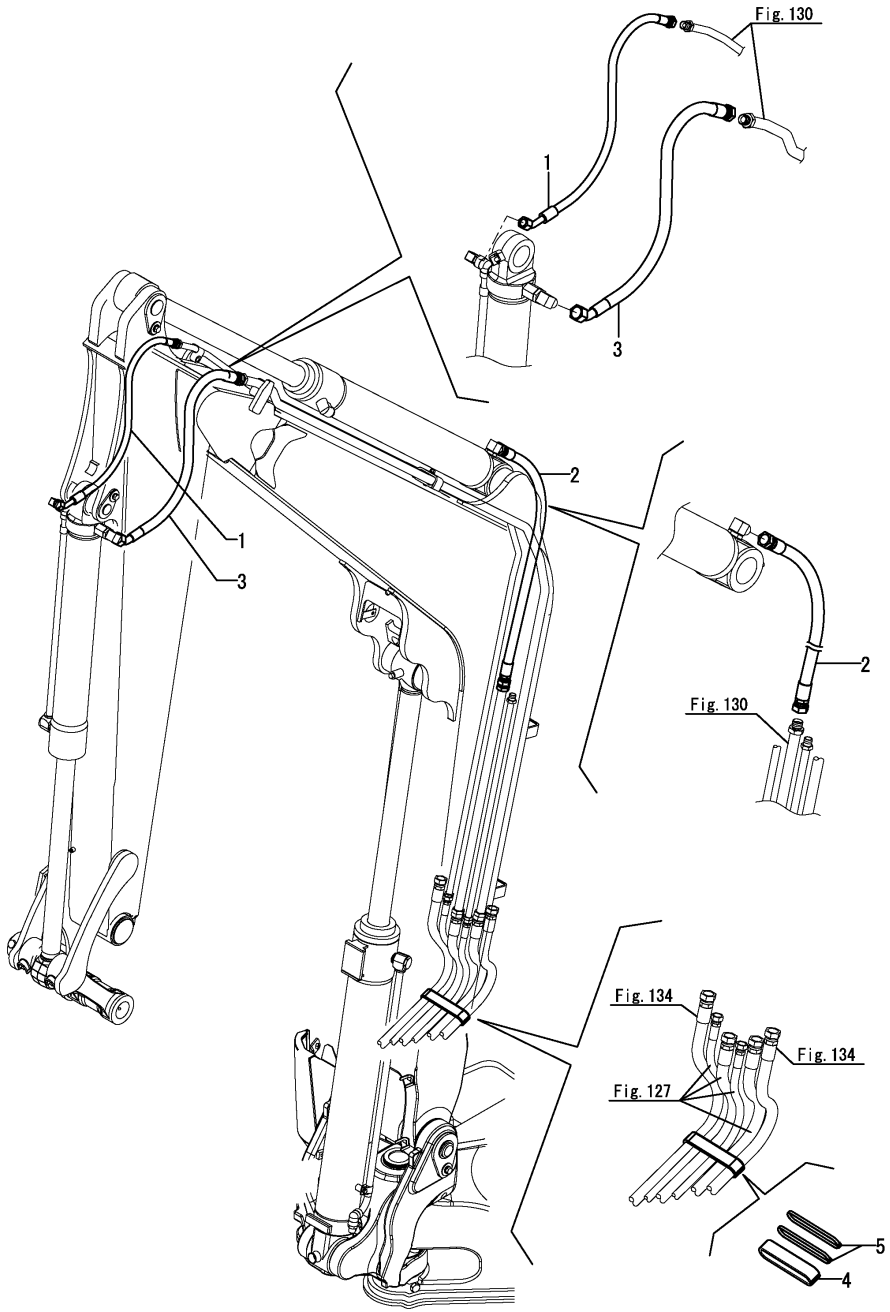

No.	Lev.	Parts No.	Description	Q'ty (A)	(B)	(C)	(D)	(E)	(F)	I	R
1	1	172499-78210	HOSE,H108BE091W	1							
2	1	172A69-78550	HOSE G112BB102K	1							
3	1	172A69-78570	HOSE G112BE091W	1							
4	1	172A69-78680	HOSE COVER 23X330	1							
5	1	172A69-79890	HOSE CLIP 400	2							

N:Old $\frac{\text{Yes}}{\text{No}}$ New, Q:Old $\frac{\text{No}}{\text{Yes}}$ New, R:Old $\frac{\text{Yes}}{\text{Yes}}$ New, S:Old $\frac{\text{No}}{\text{No}}$ New, W:Add, Z:Discontinued, F:Interchangeable by set, K:Q'ty Change

Copyright (C) 2015 YANMAR CO., LTD. All RightsReserved.

Fig.132. BOOM (2)(LONG ARM SPEC.)

(A)=SV100-2A C(US)
(B)=
(C)=
(D)=
(E)=
(F)=

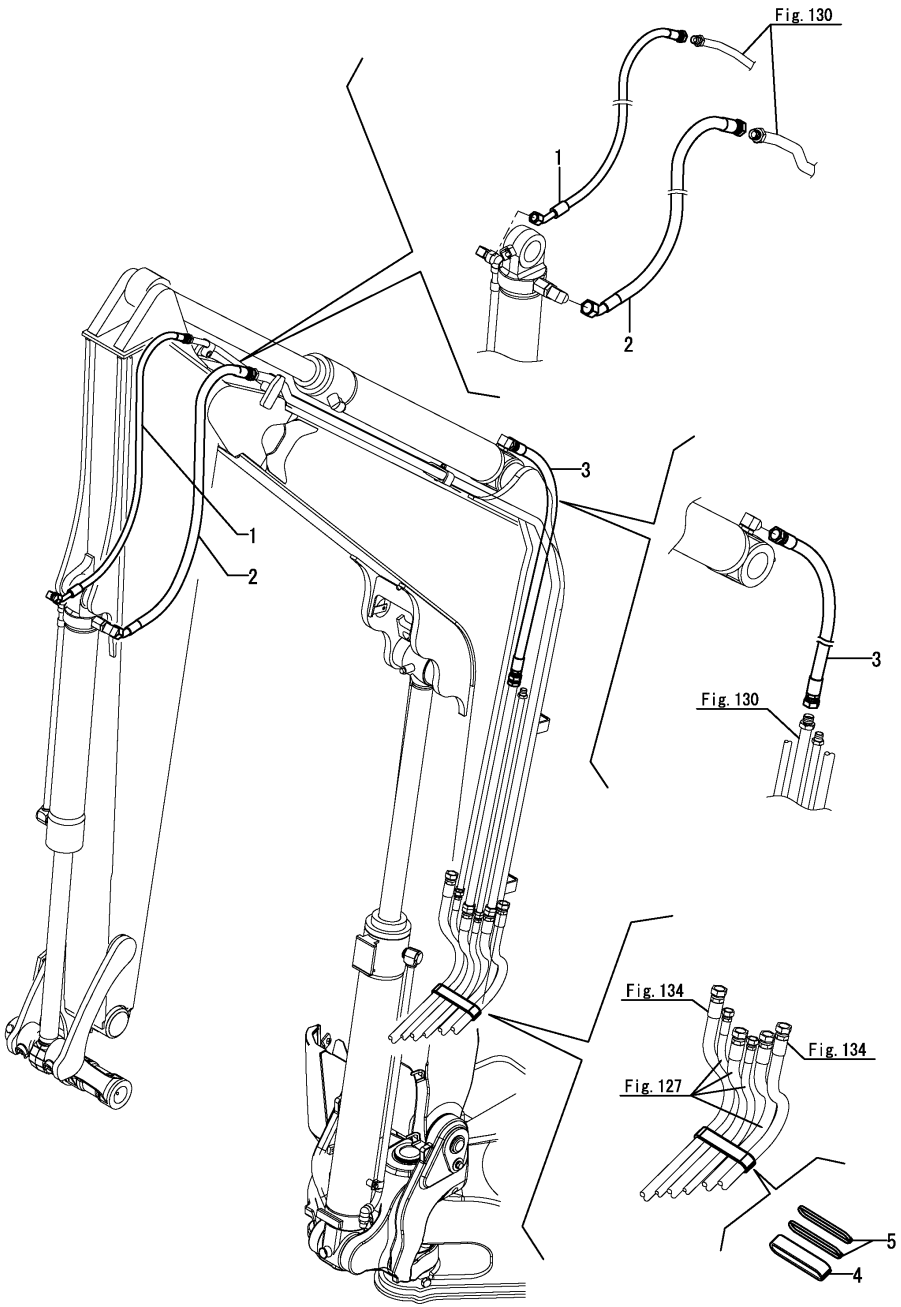

No.	Lev.	Parts No.	Description	Q'ty (A)	(B)	(C)	(D)	(E)	(F)	I	R
1	1	172B12-78300	HOSE, H112BE115W	1							
2	1	172B12-78310	HOSE, H108BE115W	1							
3	1	172A69-78550	HOSE G112BB102K	1							
4	1	172A69-78680	HOSE COVER 23X330	1							
5	1	172A69-79890	HOSE CLIP 400	2							

N:Old $\overset{\text{Yes}}{\underset{\text{No}}{\leftrightarrow}}$ New, Q:Old $\overset{\text{No}}{\underset{\text{Yes}}{\leftrightarrow}}$ New, R:Old $\overset{\text{Yes}}{\underset{\text{Yes}}{\leftrightarrow}}$ New, S:Old $\overset{\text{No}}{\underset{\text{No}}{\leftrightarrow}}$ New, W:Add, Z:Discontinued, F:Interchangeable by set, K:Q'ty Change

Copyright (C) 2015 YANMAR CO., LTD. All RightsReserved.

Fig.133. BOOM (3)

(A)=SV100-2A C(US)
(B)=
(C)=
(D)=
(E)=
(F)=

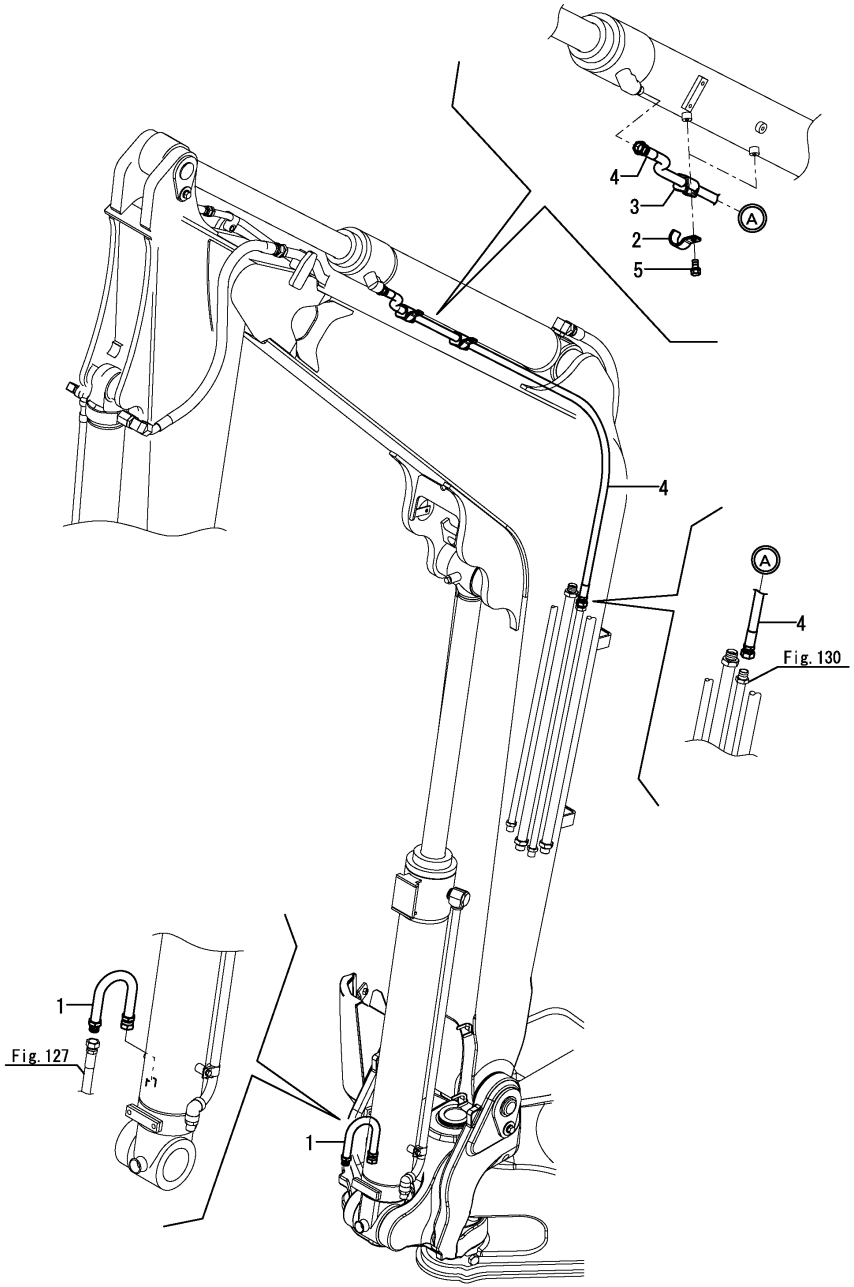

No.	Lev.	Parts No.	Description	Q'ty (A)	(B)	(C)	(D)	(E)	(F)	I	R
1	1	172A69-72070-Y	TUBE ASSY, BOOM	1							
2	1	172A69-72680	CLAMP,HOSE 1/2	2							
3	1	172187-78100	RUBBER A, HOSE CLAMP	2							
4	1	172A69-78280	HOSE H108BB202K	1							
5	1	26013-100162	BOLT, SPRING M10X 16	2							

N:Old $\xleftarrow[\text{No}]{\text{Yes}}$ New, Q:Old $\xleftarrow[\text{Yes}]{\text{No}}$ New, R:Old $\xleftarrow[\text{Yes}]{\text{Yes}}$ New, S:Old $\xleftarrow[\text{No}]{\text{No}}$ New, W:Add, Z:Discontinued, F:Interchangeable by set, K:Q'ty Change

Copyright (C) 2015 YANMAR CO., LTD. All RightsReserved.

Fig.134. P.T.O.(FRAME END)

(A)=SV100-2A C(US)
(B)=
(C)=
(D)=
(E)=
(F)=

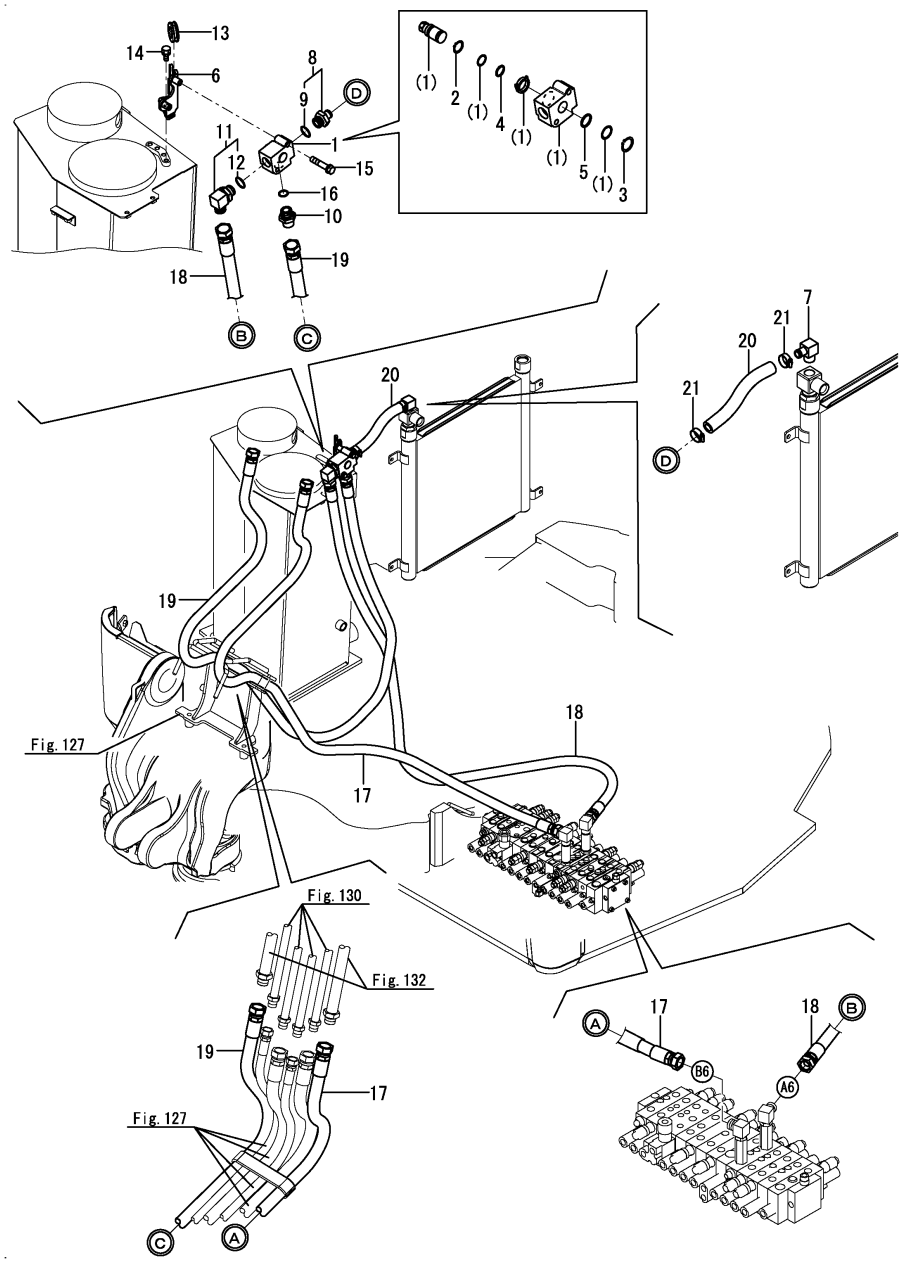

No.	Lev.	Parts No.	Description	Q'ty (A)	(B)	(C)	(D)	(E)	(F)	I	R
1	1	172A69-74050	VALVE ASSY,SELECOR	1							
2	2	22242-000210	RING, 21	1							
3	2	22242-000250	RING, 25	1							
4	2	24315-000210	O-RING, 1BP21.0	1							
5	2	24315-000250	O-RING, 1BP25.0	1							
6	1	172A69-74070	STAY, VALVE	1							
7	1	172467-76120	ELBOW	1							
8	1	172524-76210	NIPPLE, HOSE 3/4	1							
9	2	24315-000240	O-RING, 1BP24.0	1							
10	1	172142-76240	JOINT	1							
11	1	172165-76380	CONNECTOR ASSY	1							
12	2	24315-000240	O-RING, 1BP24.0	1							
13	1	172422-78760	GROMMET	1							
14	1	26013-100162	BOLT, SPRING M10X 16	2							
15	1	26013-100502	BOLT, SPRING M10X 50	2							
16	1	41851-000240	O-RING	1							
17	1	172A69-78401	HOSE G112BB265K	1							
18	1	172A69-78410	HOSE G112BB195K	1							
19	1	172A69-78420	HOSE G112BB296K	1							
20	1	172B12-78490	HOSE, G812YY023	1							
21	1	23001-025000	CLAMP, HOSE 25	2							

Remarks
* Fitting(control valve) is shown in Fig.125.

N:Old $\xleftarrow[\text{No}]{\text{Yes}}$ New, Q:Old $\xleftarrow[\text{Yes}]{\text{No}}$ New, R:Old $\xleftarrow[\text{Yes}]{\text{Yes}}$ New, S:Old $\xleftarrow[\text{No}]{\text{No}}$ New, W:Add, Z:Discontinued, F:Interchangeable by set, K:Q'ty Change

Copyright (C) 2015 YANMAR CO., LTD. All RightsReserved.

Fig.135. P.T.O.(ARM END)

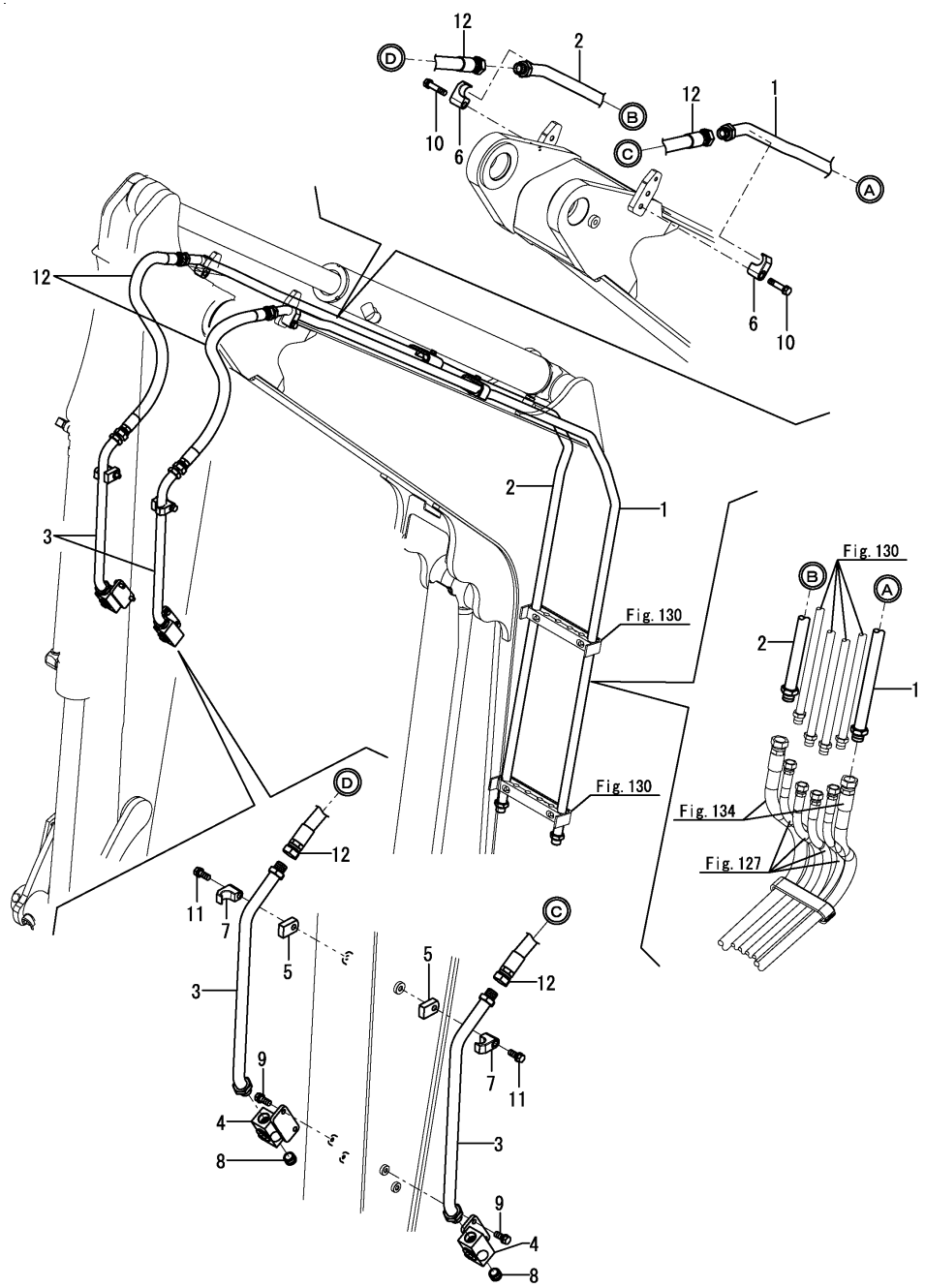

(A)=SV100-2A C(US) (D)=
(B)= (E)=
(C)= (F)=

No.	Lev.	Parts No.	Description	Q'ty (A)	(B)	(C)	(D)	(E)	(F)	I	R
1	1	172A69-76300-Y	TUBE ASSY, PTO	1							
2	1	172A69-76320-Y	TUBE ASSY, PTO	1							
3	1	172499-76500-Y	TUBE ASSY, ARM	2							
4	1	172176-76582-Y	VALVE 12 ASSY,STOP	2							
5	1	172187-76690-Y	PLATE	2							
6	1	172142-76940-Y	CLAMP	2							
7	1	172142-76940-Y	CLAMP	2							
8	1	23871-060000	PLUG, R06	2							
9	1	26013-100252	BOLT, SPRING M10X 25	4							
10	1	26013-120552	BOLT, SPRING M12X 55	2							
11	1	26013-120702	BOLT, SPRING M12X 70	2							
12	1	172187-79300	HOSE	2							

N:Old $\xleftarrow[\text{No}]{\text{Yes}}$ New, Q:Old $\xleftarrow[\text{Yes}]{\text{No}}$ New, R:Old $\xleftarrow[\text{Yes}]{\text{Yes}}$ New, S:Old $\xleftarrow[\text{No}]{\text{No}}$ New, W:Add, Z:Discontinued, F:Interchangeable by set, K:Q'ty Change

Copyright (C) 2015 YANMAR CO., LTD. All RightsReserved.

Fig.136. P.T.O.(ARM END)(LONG ARM)

(A)=SV100-2A C(US)
(B)=
(C)=
(D)=
(E)=
(F)=

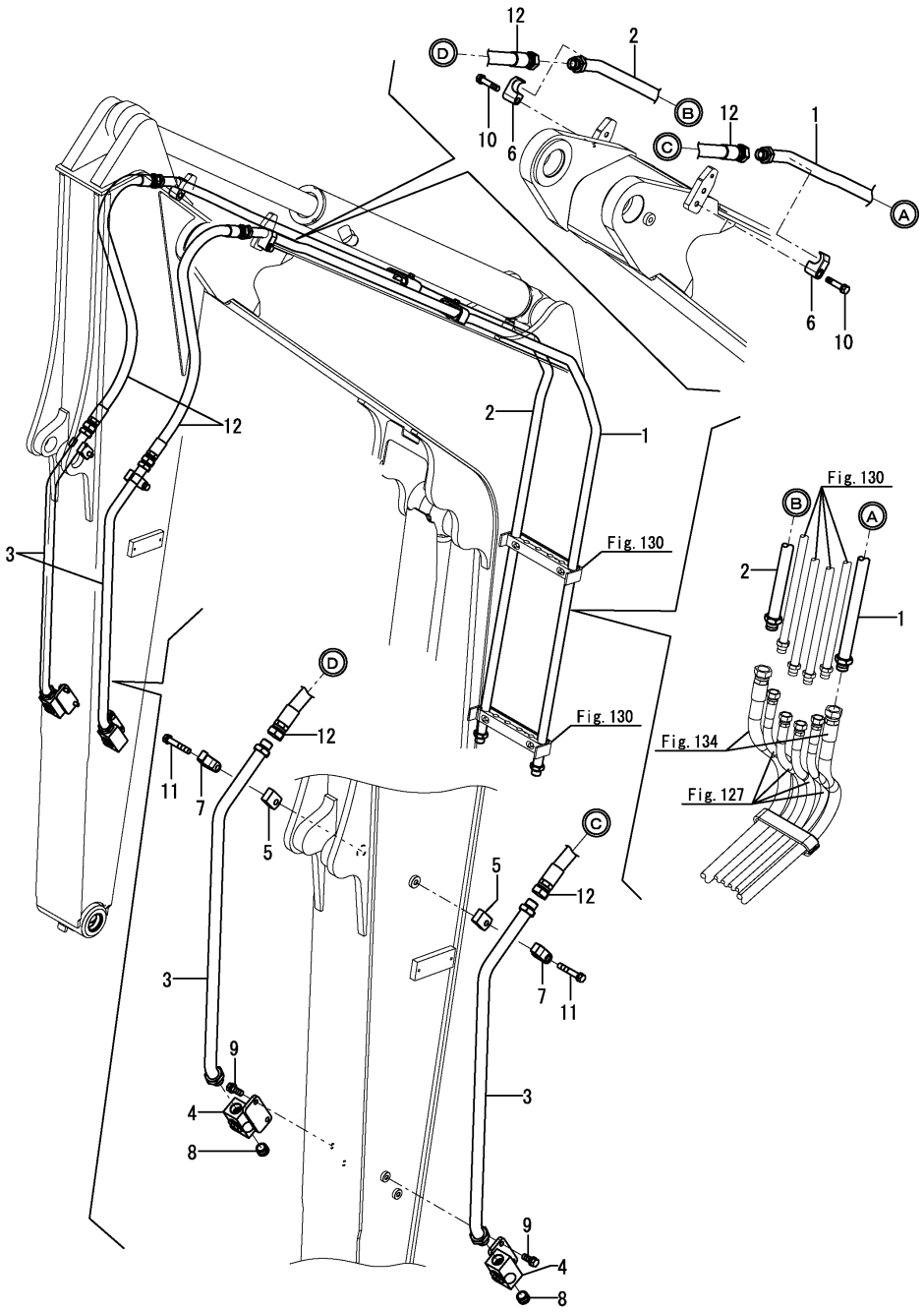

No.	Lev.	Parts No.	Description	Q'ty (A)	(B)	(C)	(D)	(E)	(F)	I	R
1	1	172A69-76300-Y	TUBE ASSY, PTO	1							
2	1	172A69-76320-Y	TUBE ASSY, PTO	1							
3	1	172B12-76570	TUBE ASSY, ARM	2							
4	1	172176-76582-Y	VALVE 12 ASSY,STOP	2							
5	1	172187-76690-Y	PLATE	2							
6	1	172142-76940-Y	CLAMP	2							
7	1	172142-76940-Y	CLAMP	2							
8	1	23871-060000	PLUG, R06	2							
9	1	26013-100252	BOLT, SPRING M10X 25	4							
10	1	26013-120552	BOLT, SPRING M12X 55	2							
11	1	26013-120702	BOLT, SPRING M12X 70	2							
12	1	172B12-79300	HOSE, G112BB103W	2							

N:Old $\frac{\text{Yes}}{\text{No}}$ New, Q:Old $\frac{\text{No}}{\text{Yes}}$ New, R:Old $\frac{\text{Yes}}{\text{Yes}}$ New, S:Old $\frac{\text{No}}{\text{No}}$ New, W:Add, Z:Discontinued, F:Interchangeable by set, K:Q'ty Change

Copyright (C) 2015 YANMAR CO., LTD. All RightsReserved.

Fig.137. QUICK COUPLER

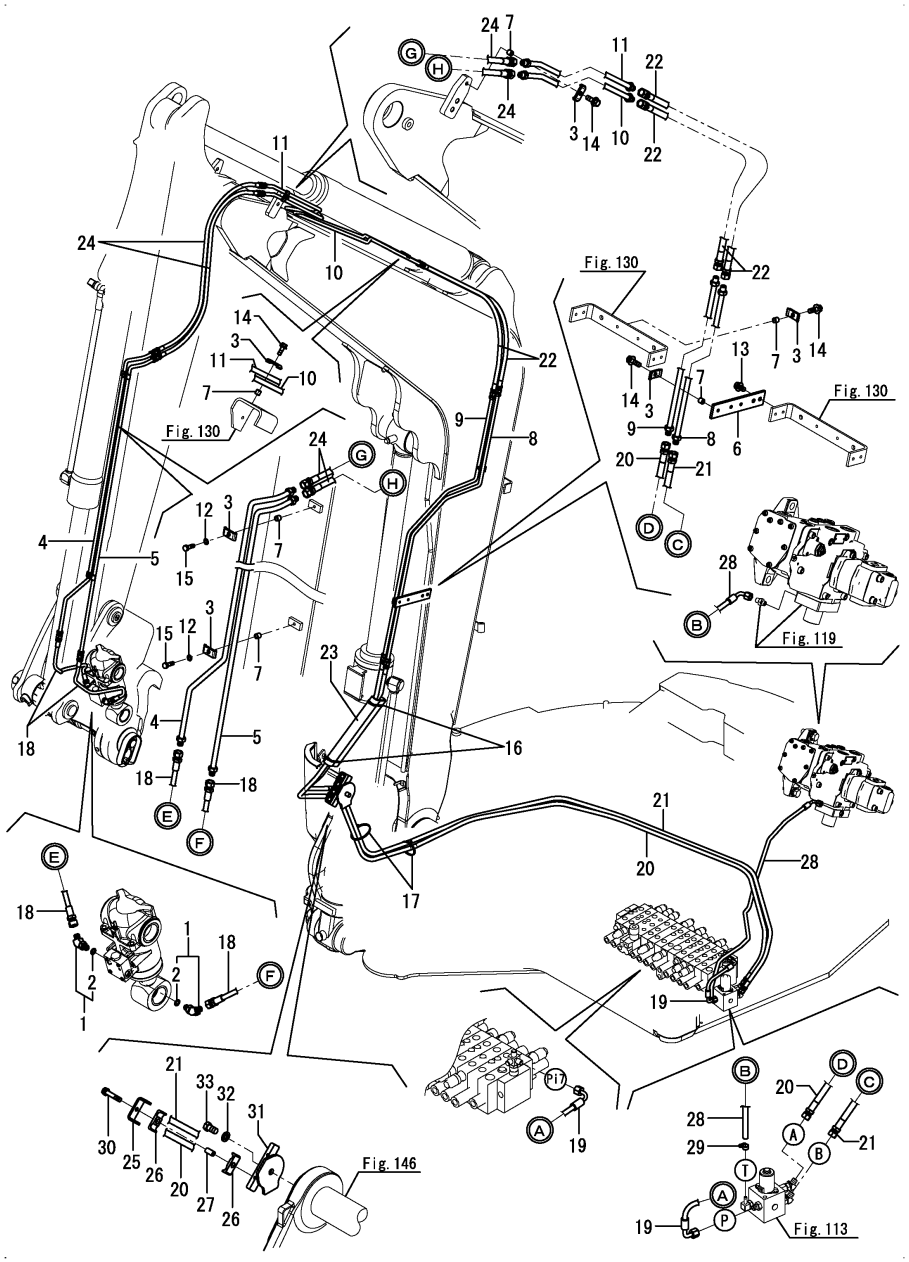

(A)=SV100-2A C(US) (D)=
(B)= (E)=
(C)= (F)=

No.	Lev.	Parts No.	Description	Q'ty (A)	(B)	(C)	(D)	(E)	(F)	I	R
1	1	172978-76100	ELBOW	2							
2	2	24315-000110	O-RING, 1BP11.0	2							
3	1	172110-76170	PLATE	6							
4	1	172978-76480-Y	TUBE ASSY, ARM	1							
5	1	172978-76500-Y	TUBE ASSY, ARM	1							
6	1	172B11-76510	PLATE, CLAMP Q HV	1							
7	1	172137-76580	COLLAR	6							
8	1	172A69-76600-Y	TUBE ASSY	1							
9	1	172A69-76620-Y	TUBE ASSY	1							
10	1	172A69-76640-Y	TUBE ASSY	1							
11	1	172A69-76660-Y	TUBE ASSY	1							
12	1	22217-080000	WASHER, SPRING 8	2							
13	1	26014-080162	BOLT, M8X 16	2							
14	1	26014-080252	BOLT, M8X 25	4							
15	1	26076-080252	BOLT, 10.98X 25	2							
16	1	172126-11510	BAND	2							
17	1	194202-56460	BAND, 200	2							
18	1	172958-78120	HOSE	2							
19	1	172A69-78591	HOSE H604CC025	1							
20	1	172A89-78600	HOSE H604BB339K	1							
21	1	172A89-78610	HOSE H604BB339K	1							
22	1	172A69-78620	HOSE H604BB093K	2							
23	1	172A69-78670	COVER, HOSE	1							
24	1	172499-79120	HOSE	2							
25	1	172A69-79200	CLAMP, 54X25	1							
26	1	172A69-79210	SUPPORT, RUBBER	2							
27	1	172A69-79220	COLLAR, 9X24	1							
28	1	172B12-79620	HOSE, G804CY145	1							
29	1	23000-013000	CLAMP, 13	1							
30	1	26013-080402	BOLT, SPRING M8X 40	1							
31	1	172A69-79250-Y	CLAMP ASSY	1							
32	1	22217-140000	WASHER, SPRING 14	1							
33	1	26116-140252	BOLT, M14X 25 PLATED	1							

Remarks
* Fitting(control valve) is shown in Fig.123 & 124.

N:Old $\xleftarrow[\text{No}]{\text{Yes}}$ New, Q:Old $\xleftarrow[\text{Yes}]{\text{No}}$ New, R:Old $\xleftarrow[\text{Yes}]{\text{Yes}}$ New, S:Old $\xleftarrow[\text{No}]{\text{No}}$ New, W:Add, Z:Discontinued, F:Interchangeable by set, K:Q'ty Change

Copyright (C) 2015 YANMAR CO., LTD. All RightsReserved.

Fig.138. CONTROL PIPING(CONTROL VALVE - SOLENOID VALVE)

(A)=SV100-2A C(US)
(B)=
(C)=
(D)=
(E)=
(F)=

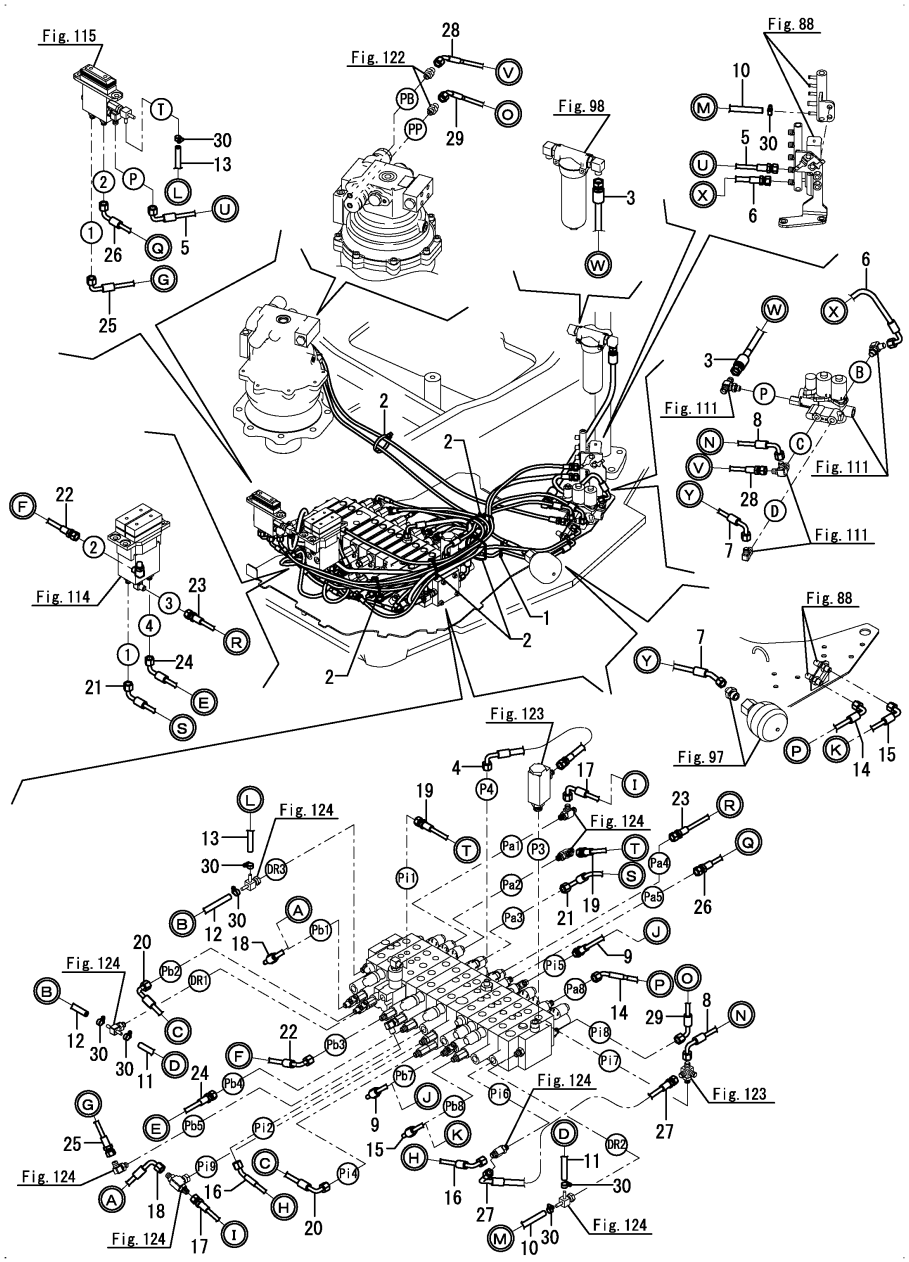

No.	Lev.	Parts No.	Description	Q'ty (A)	(B)	(C)	(D)	(E)	(F)	I	R
1	1	172137-16560	BAND	1							
2	1	194202-56460	BAND, 200	5							
3	1	172B12-78190	HOSE, H606BB070	1							
4	1	172A69-78370	HOSE	1							
5	1	172A69-78860	HOSE	1							
6	1	172B11-78870	HOSE, H604BC042	1							
7	1	172B11-78881	HOSE, H603CB058	1							
8	1	172A69-78910	HOSE	1							
9	1	172A69-78920	HOSE	1							
10	1	172A69-78930	HOSE	1							
11	1	172A69-78940	HOSE	1							
12	1	172A69-78950	HOSE	1							
13	1	172A69-78960	HOSE	1							
14	1	172A69-78980	HOSE	1							
15	1	172A69-78990	HOSE	1							
16	1	172A69-79400	HOSE	1							
17	1	172A69-79410	HOSE	1							
18	1	172A69-79420	HOSE	1							
19	1	172A69-79430	HOSE	1							
20	1	172A69-79440	HOSE	1							
21	1	172A69-79450	HOSE	1							
22	1	172A69-79460	HOSE	1							
23	1	172A69-79470	HOSE	1							
24	1	172A69-79481	HOSE H603BC036	1							
25	1	172A69-79501	HOSE F403BC042	1							
26	1	172A69-79511	HOSE F403BC133	1							
27	1	172A69-79520	HOSE	1							
28	1	172A69-79950	HOSE, F403BE145S	1							
29	1	172A69-79960	HOSE, F403CE160S	1							
30	1	23000-013000	CLAMP, 13	8							

Remarks
* Fitting(control valve) is shown in Fig.123 & 124.

N:Old $\xleftarrow[\text{No}]{\text{Yes}}$ New, Q:Old $\xleftarrow[\text{Yes}]{\text{No}}$ New, R:Old $\xleftarrow[\text{Yes}]{\text{Yes}}$ New, S:Old $\xleftarrow[\text{No}]{\text{No}}$ New, W:Add, Z:Discontinued, F:Interchangeable by set, K:Q'ty Change

Copyright (C) 2015 YANMAR CO., LTD. All RightsReserved.

Fig.139. CONTROL PIPING(CONTROL VALVE - 4-WAY VALVE)

(A)=SV100-2A C(US)
(B)=
(C)=
(D)=
(E)=
(F)=

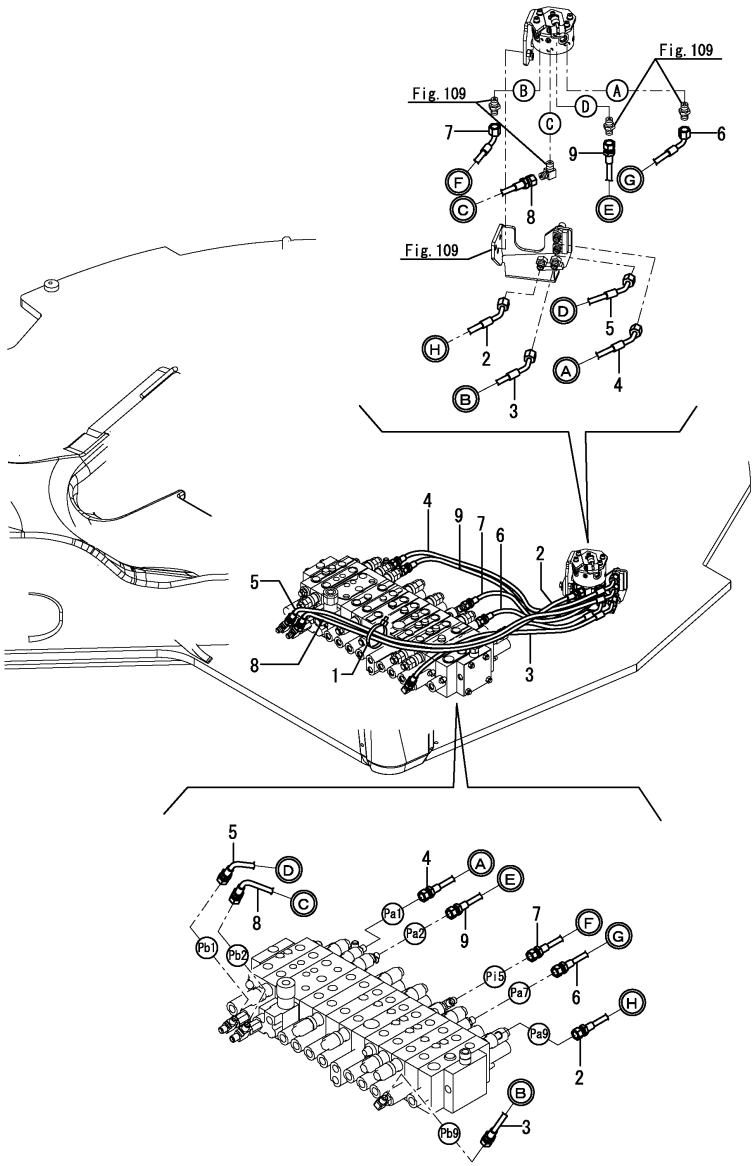

No.	Lev.	Parts No.	Description	Q'ty (A)	(B)	(C)	(D)	(E)	(F)	I	R
1	1	194202-56460	BAND, 200	1							
2	1	172A69-79800	HOSE H603BE030	1							
3	1	172A69-79810	HOSE F403BE075	1							
4	1	172A69-79820	HOSE F403BE079	1							
5	1	172A69-79830	HOSE F403BE112	1							
6	1	172A69-79840	HOSE F403BC040	1							
7	1	172A69-79850	HOSE F403BC082	1							
8	1	172A69-79860	HOSE F403BB081	1							
9	1	172A69-79870	HOSE F403BB071	1							

Remarks
* Fitting(control valve) is shown in Fig.124.

N:Old $\xleftarrow[\text{No}]{\text{Yes}}$ New, Q:Old $\xleftarrow[\text{Yes}]{\text{No}}$ New, R:Old $\xleftarrow[\text{Yes}]{\text{Yes}}$ New, S:Old $\xleftarrow[\text{No}]{\text{No}}$ New, W:Add, Z:Discontinued, F:Interchangeable by set, K:Q'ty Change

Copyright (C) 2015 YANMAR CO., LTD. All RightsReserved.

Fig.140. CONTROL PIPING(2-WAY VALVE - REMOTE CONTROL VALVE)

(A)=SV100-2A C(US)
(B)=
(C)=
(D)=
(E)=
(F)=

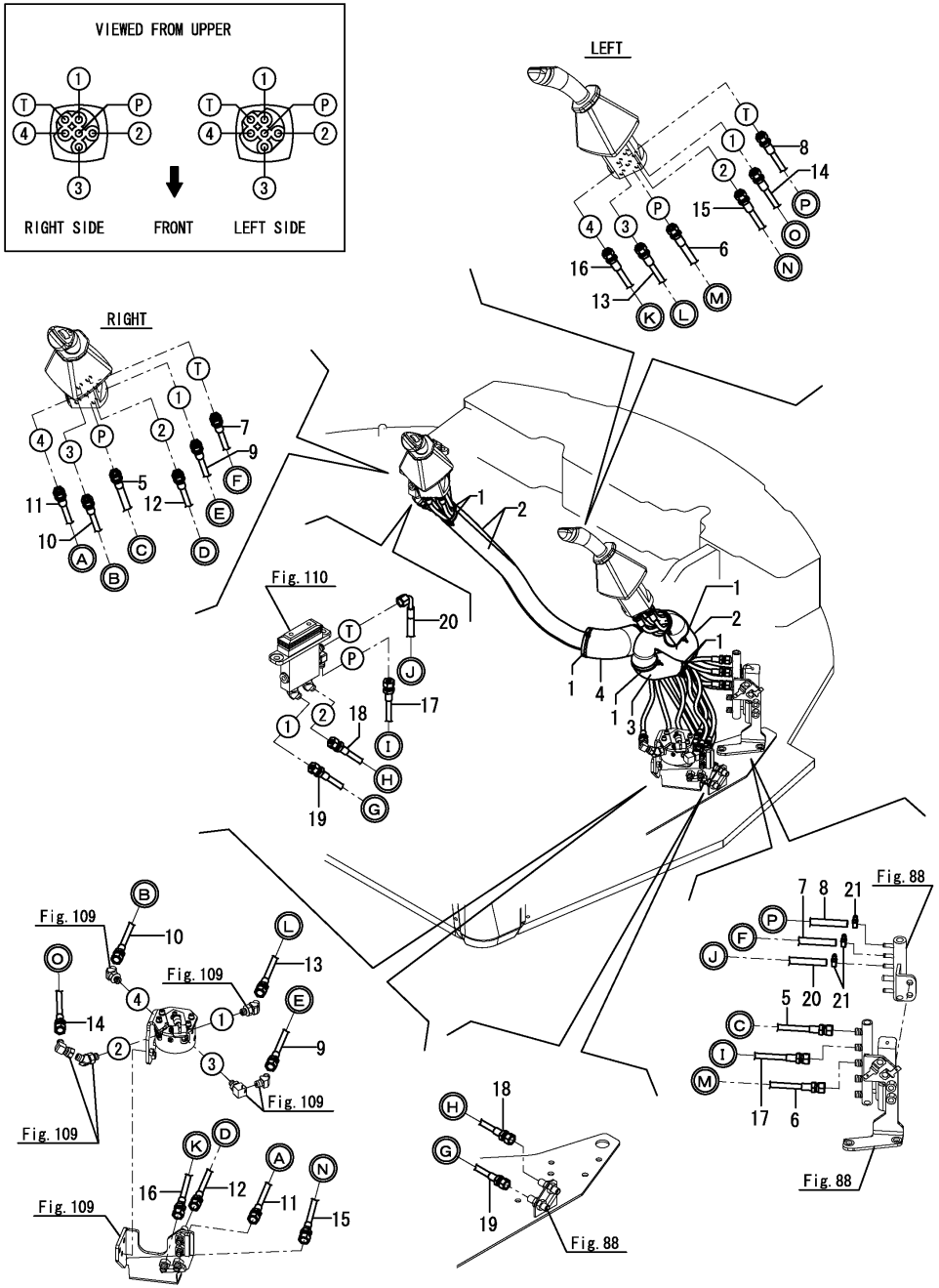

No.	Lev.	Parts No.	Description	Q'ty (A)	(B)	(C)	(D)	(E)	(F)	I	R
1	1	172126-11510	BAND	12							
2	1	172A69-78630	COVER, HOSE	3							
3	1	172A69-78650	SPONGE, HOSE	1							
4	1	172A69-78660	SPONGE, HOSE	1							
5	1	172A69-78700	HOSE	1							
6	1	172A69-78711	HOSE	1							
7	1	172A69-78720	HOSE	1							
8	1	172A69-78731	HOSE	1							
9	1	172A69-78740	HOSE	1							
10	1	172A69-78750	HOSE	1							
11	1	172A69-78760	HOSE	1							
12	1	172A69-78770	HOSE	1							
13	1	172A69-78781	HOSE	1							
14	1	172A69-78791	HOSE	1							
15	1	172A69-78801	HOSE	1							
16	1	172A69-78811	HOSE	1							
17	1	172A69-78820	HOSE	1							
18	1	172A69-78830	HOSE	1							
19	1	172A69-78840	HOSE	1							
20	1	172A69-78850	HOSE	1							
21	1	23000-013000	CLAMP, 13	3							

N:Old ◄Yes/No► New, Q:Old ◄No/Yes► New, R:Old ◄Yes/Yes► New, S:Old ◄No/No► New, W:Add, Z:Discontinued, F:Interchangeable by set, K:Q'ty Change

Copyright (C) 2015 YANMAR CO., LTD. All RightsReserved.

Fig.141. CONTROL PIPING(TRAVEL & SWING PEDAL)

(A)=SV100-2A C(US)
(B)=
(C)=
(D)=
(E)=
(F)=

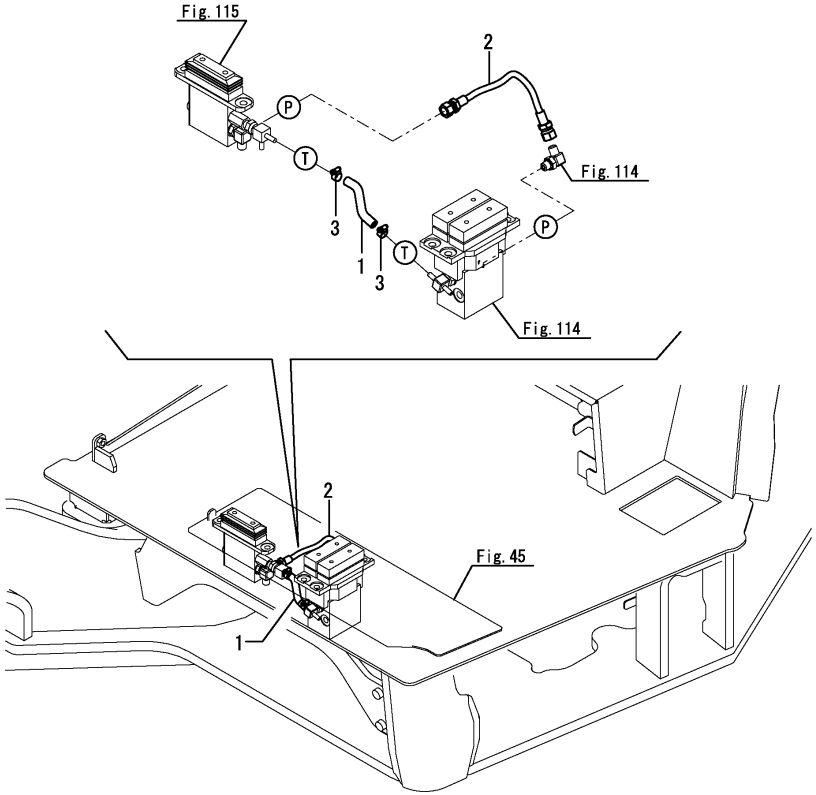

No.	Lev.	Parts No.	Description	Q'ty (A)	(B)	(C)	(D)	(E)	(F)	I	R
1	1	172A69-78970	HOSE	1							
2	1	172A69-79490	HOSE	1							
3	1	23000-013000	CLAMP, 13	2							

N:Old $\xleftrightarrow[\text{No}]{\text{Yes}}$ New, Q:Old $\xleftrightarrow[\text{Yes}]{\text{No}}$ New, R:Old $\xleftrightarrow[\text{Yes}]{\text{Yes}}$ New, S:Old $\xleftrightarrow[\text{No}]{\text{No}}$ New, W:Add, Z:Discontinued, F:Interchangeable by set, K:Q'ty Change

Copyright (C) 2015 YANMAR CO., LTD. All RightsReserved.

Fig.142. CONTROL PIPING(P.T.O.)

(A)=SV100-2A C(US)
(B)=
(C)=
(D)=
(E)=
(F)=

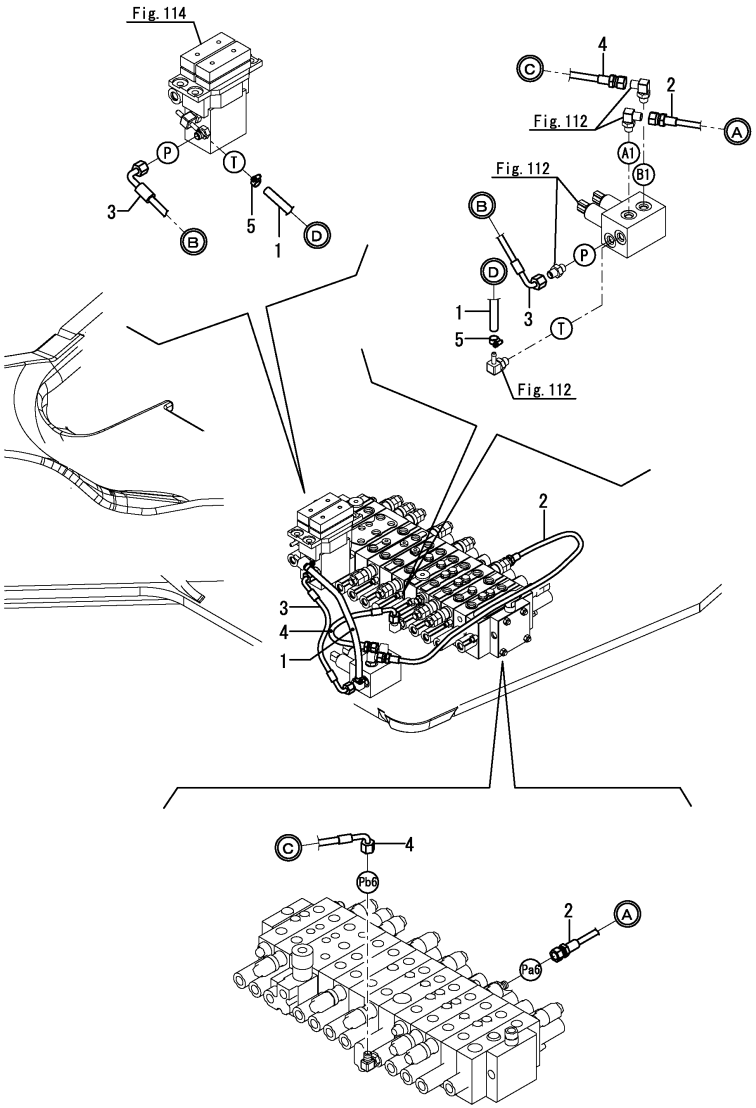

No.	Lev.	Parts No.	Description	Q'ty (A)	(B)	(C)	(D)	(E)	(F)	I	R
1	1	172B11-79540	HOSE, G604YY029	1							
2	1	172B11-79550	HOSE, F403BB095	1							
3	1	172B11-79560	HOSE, H603CC028	1							
4	1	172B11-79570	HOSE, H603BC029	1							
5	1	23000-013000	CLAMP, 13	2							

Remarks
* Fitting(control valve) is shown in Fig.124.

N:Old ◄Yes/No► New, Q:Old ◄No/Yes► New, R:Old ◄Yes/Yes► New, S:Old ◄No/No► New, W:Add, Z:Discontinued, F:Interchangeable by set, K:Q'ty Change

Copyright (C) 2015 YANMAR CO., LTD. All RightsReserved.

Fig.143. GREASING(TURNING FRAME)

(A)=SV100-2A C(US)
(B)=
(C)=
(D)=
(E)=
(F)=

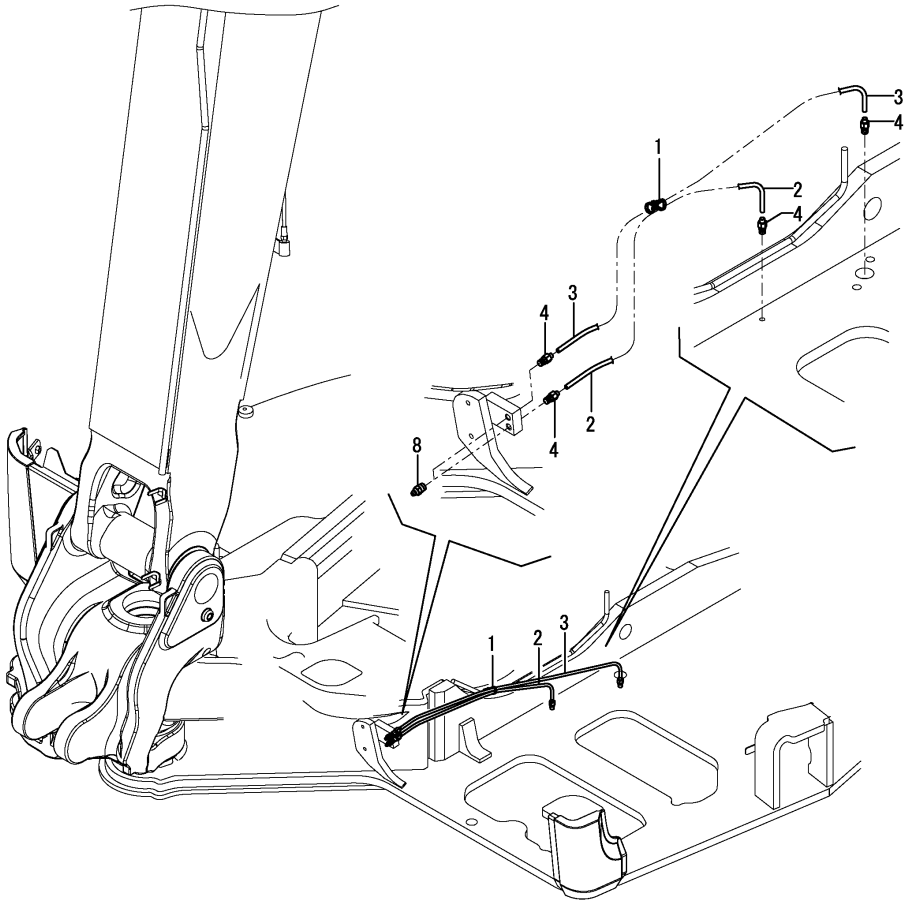

No.	Lev.	Parts No.	Description	Q'ty (A)	(B)	(C)	(D)	(E)	(F)	I	R
1	1	172137-16560	BAND	1							
2	1	172A69-77800	HOSE	1							
3	1	172A69-77810	HOSE	1							
4	1	172A47-77820	JOINT, GREASE	4							
8	1	24761-020000	NIPPLE, GREASE PT1/8	2							

N:Old $\xleftarrow[\text{No}]{\text{Yes}}$ New, Q:Old $\xleftarrow[\text{Yes}]{\text{No}}$ New, R:Old $\xleftarrow[\text{Yes}]{\text{Yes}}$ New, S:Old $\xleftarrow[\text{No}]{\text{No}}$ New, W:Add, Z:Discontinued, F:Interchangeable by set, K:Q'ty Change

Copyright (C) 2015 YANMAR CO., LTD. All RightsReserved.

Fig.144. GREASING(BOOM)

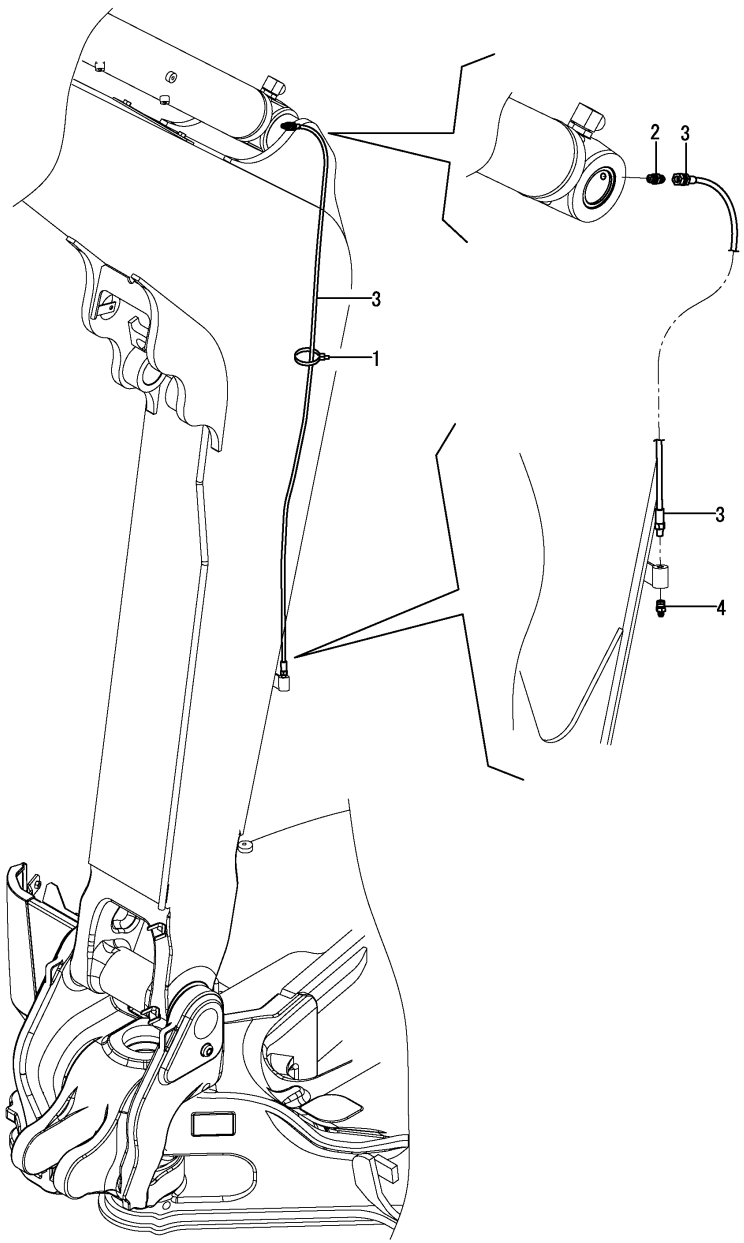

(A)=SV100-2A C(US)
(B)=
(C)=
(D)=
(E)=
(F)=

No.	Lev.	Parts No.	Description	Q'ty (A)	(B)	(C)	(D)	(E)	(F)	I	R
1	1	194202-56460	BAND, 200	1							
2	1	172112-77580	JOINT, 1/8	1							
3	1	172A89-77820	HOSE P202AF145	1							
4	1	24761-020000	NIPPLE, GREASE PT1/8	1							

N:Old $\xleftrightarrow[\text{No}]{\text{Yes}}$ New, Q:Old $\xleftrightarrow[\text{Yes}]{\text{No}}$ New, R:Old $\xleftrightarrow[\text{Yes}]{\text{Yes}}$ New, S:Old $\xleftrightarrow[\text{No}]{\text{No}}$ New, W:Add, Z:Discontinued, F:Interchangeable by set, K:Q'ty Change

Copyright (C) 2015 YANMAR CO., LTD. All RightsReserved.

Fig.145. BOOM BRACKET

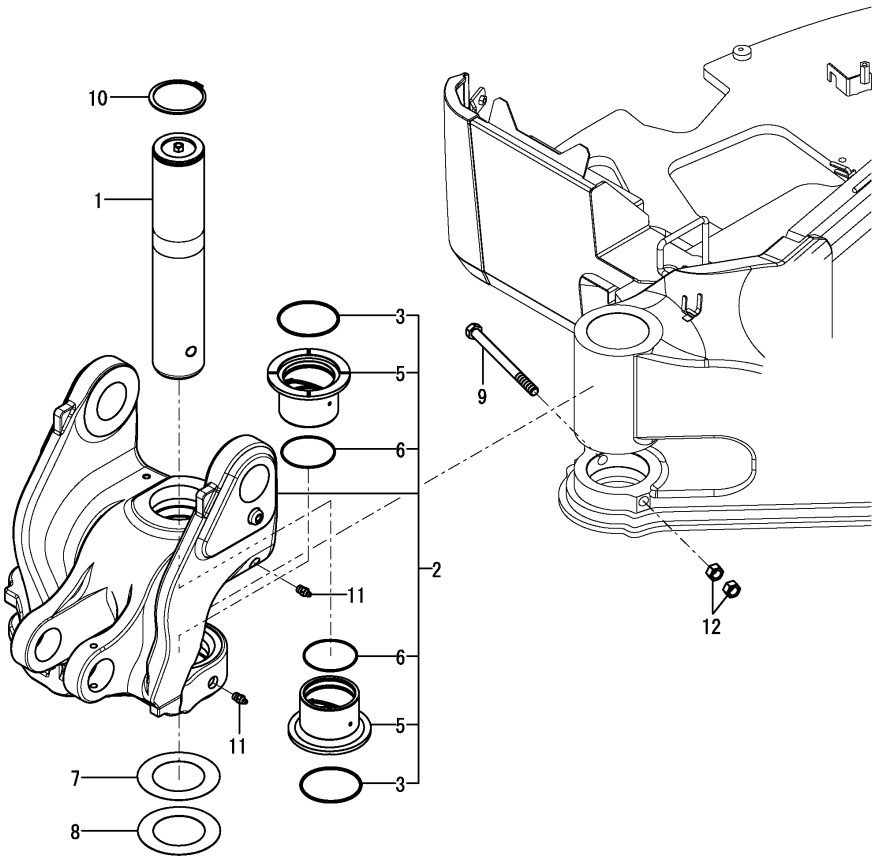

(A)=SV100-2A C(US)
(B)=
(C)=
(D)=
(E)=
(F)=

No.	Lev.	Parts No.	Description	Q'ty (A)	(B)	(C)	(D)	(E)	(F)	I	R
1	1	172A69-82100	PIN ASSY	1							
2	1	172A69-82300-Y	BRACKET ASSY, BOOM	1							
3	2	172162-81680	SEAL, DUST	2							
5	2	172187-82320	BUSH	2							
6	2	24321-001000	O-RING, 1AG100.0	2							
7	1	172187-82400	SHIM	1							
8	1	172187-82410	SHIM	1							
9	1	172187-82420	BOLT	1							
10	1	22242-001000	RING, 100	1							
11	1	24761-020000	NIPPLE, GREASE PT1/8	2							
12	1	26716-180002	NUT, M18	2							

N:Old $\overset{\text{Yes}}{\underset{\text{No}}{\leftrightarrows}}$ New, Q:Old $\overset{\text{No}}{\underset{\text{Yes}}{\leftrightarrows}}$ New, R:Old $\overset{\text{Yes}}{\underset{\text{Yes}}{\leftrightarrows}}$ New, S:Old $\overset{\text{No}}{\underset{\text{No}}{\leftrightarrows}}$ New, W:Add, Z:Discontinued, F:Interchangeable by set, K:Q'ty Change

Copyright (C) 2015 YANMAR CO., LTD. All RightsReserved.

Fig.146. BOOM

(A)=SV100-2A C(US)
(B)=
(C)=
(D)=
(E)=
(F)=

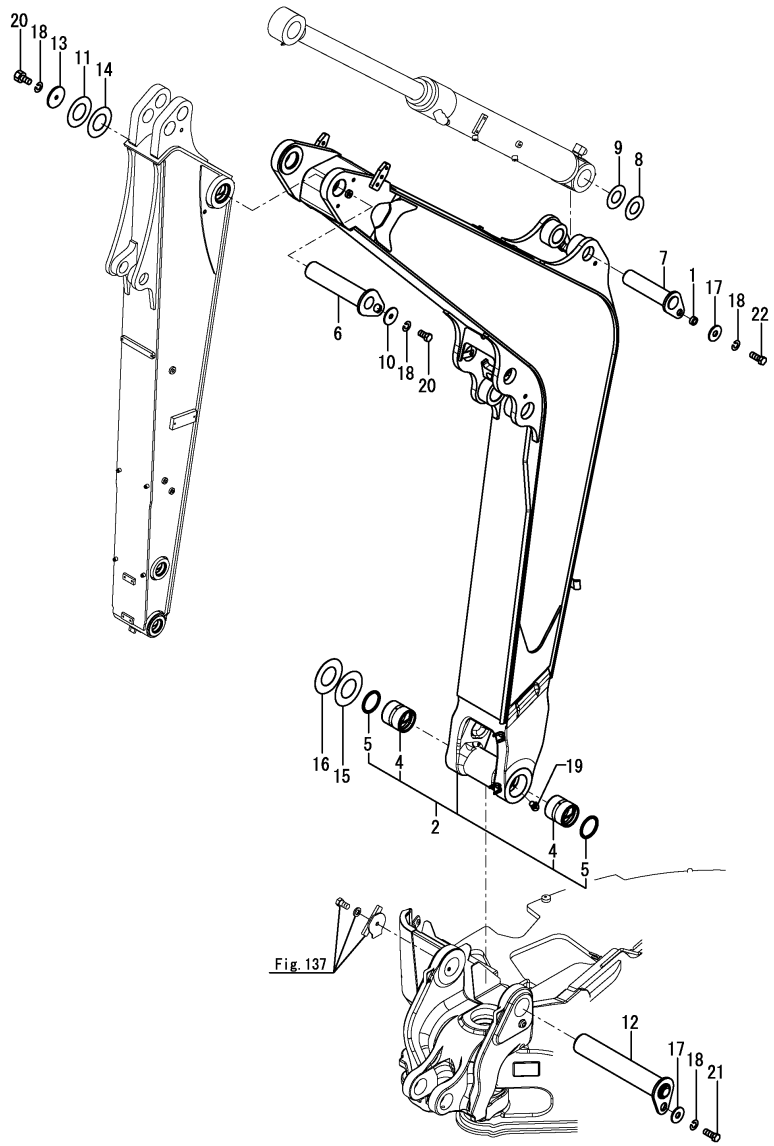

No.	Lev.	Parts No.	Description	Q'ty (A)	(B)	(C)	(D)	(E)	(F)	I	R
1	1	172155-45790	SPACER	1							
2	1	172A69-81101-Y	BOOM ASSY	1							1
4	2	172A52-81352	BUSH	2							
5	2	172162-81430	SEAL, DUST	2							
5A	1	172187-03941	LABEL, BOOM US	1							2
6	1	172499-81751	PIN ASSY,70X315	1							
7	1	172187-81840	PIN ASSY	1							
8	1	172499-81850	SHIM	1							
9	1	172499-81860	SHIM	1							
10	1	172187-81970	WASHER	1							
11	1	172445-81990	SHIM	1							
12	1	172A69-82120	PIN ASSY	1							
13	1	172187-82430	WASHER	1							
14	1	172162-83580	SHIM	1							
15	1	172162-83600	SHIM	1							
16	1	172162-83610	SHIM	1							
17	1	22157-140000	WASHER, 14	2							
18	1	22217-140000	WASHER, SPRING 14	4							
19	1	24761-040000	NIPPLE, GREASE B	2							
20	1	26116-140252	BOLT, M14X 25 PLATED	2							
21	1	26116-140252	BOLT, M14X 25 PLATED	1							
22	1	26116-140352	BOLT, M14X 35 PLATED	1							

Remarks
(1)Attach the No.5A label to this part.
(2)Label is not illustrated.
(3)Not applied for quick coupler specification.

N:Old $\xleftarrow[\text{No}]{\text{Yes}}$ New, Q:Old $\xleftarrow[\text{Yes}]{\text{No}}$ New, R:Old $\xleftarrow[\text{Yes}]{\text{Yes}}$ New, S:Old $\xleftarrow[\text{No}]{\text{No}}$ New, W:Add, Z:Discontinued, F:Interchangeable by set, K:Q'ty Change

Copyright (C) 2015 YANMAR CO., LTD. All RightsReserved.

Fig.147. ARM

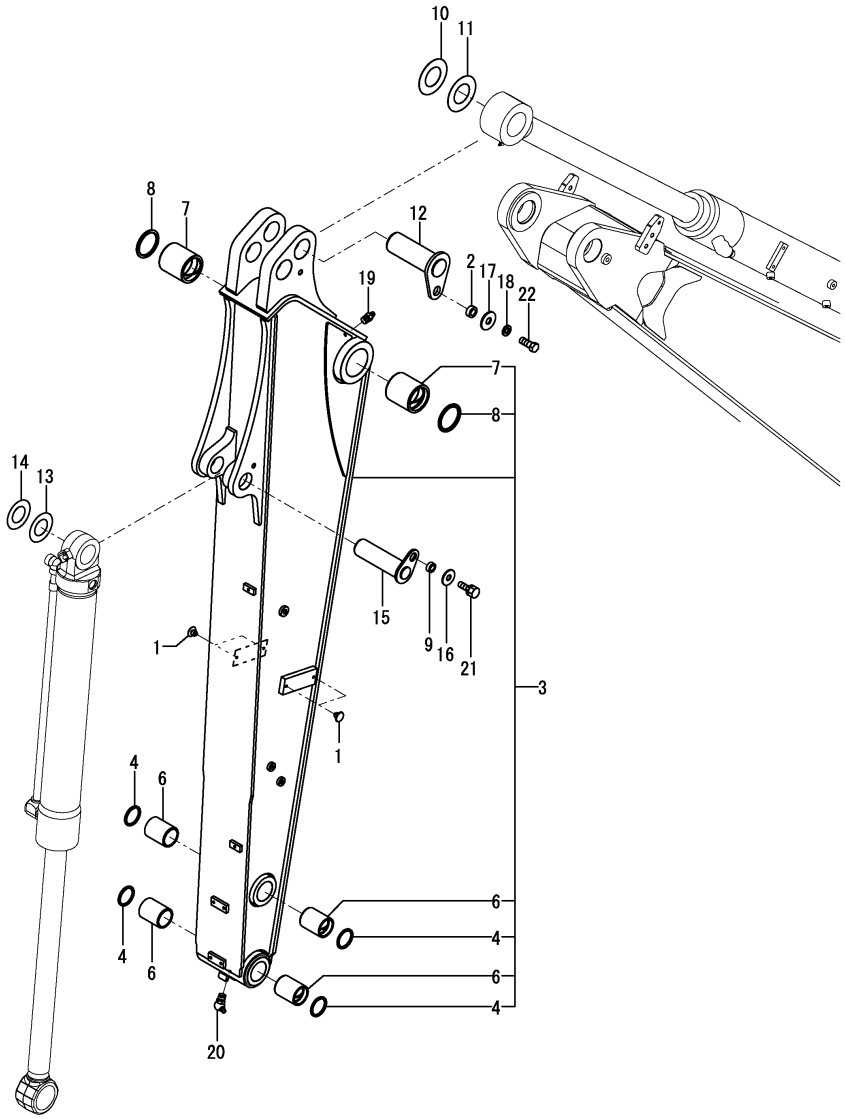

(A)=SV100-2A C(US)
(B)=
(C)=
(D)=
(E)=
(F)=

No.	Lev.	Parts No.	Description	Q'ty (A)	(B)	(C)	(D)	(E)	(F)	I	R
1	1	172444-17660	CLIP, TREE	4							
2	1	172155-45790	SPACER	1							
3	1	172A69-81502	ARM ASSY	1							1
4	2	172448-54120	SEAL, DUST	4							
6	2	172187-81710	BUSH	4							
7	2	172162-82280	BUSH	2							
8	2	172162-82350	SEAL, DUST	2							
8A	1	172472-03261	LABEL, FINGER	1							2
8B	1	172472-03330	LABEL, LOCK PIN	1							2
9	1	172164-81670	SPACER	1							
10	1	172175-81700	SHIM	1							
11	1	172175-81710	SHIM	1							
12	1	172499-81800	PIN	1							
13	1	172165-82520	SHIM	1							
14	1	172165-82530	SHIM	1							
15	1	172455-83300	PIN ASSY	1							
16	1	22157-120000	WASHER, 12	1							
17	1	22157-140000	WASHER, 14	1							
18	1	22217-140000	WASHER, SPRING 14	1							
19	1	24761-020000	NIPPLE, GREASE PT1/8	1							
20	1	24761-040000	NIPPLE, GREASE B	1							
21	1	26013-120302	BOLT, SPRING M12X 30	1							
22	1	26116-140352	BOLT, M14X 35 PLATED	1							

Remarks
(1)Attach the No.8A & 8B label to this part.
(2)Label is not illustrated.

N:Old $\xleftarrow[\text{No}]{\text{Yes}}$ New, Q:Old $\xleftarrow[\text{Yes}]{\text{No}}$ New, R:Old $\xleftarrow[\text{Yes}]{\text{Yes}}$ New, S:Old $\xleftarrow[\text{No}]{\text{No}}$ New, W:Add, Z:Discontinued, F:Interchangeable by set, K:Q'ty Change

Copyright (C) 2015 YANMAR CO., LTD. All RightsReserved.

Fig.148. LONG ARM

(A)=SV100-2A C(US)
(B)=
(C)=
(D)=
(E)=
(F)=

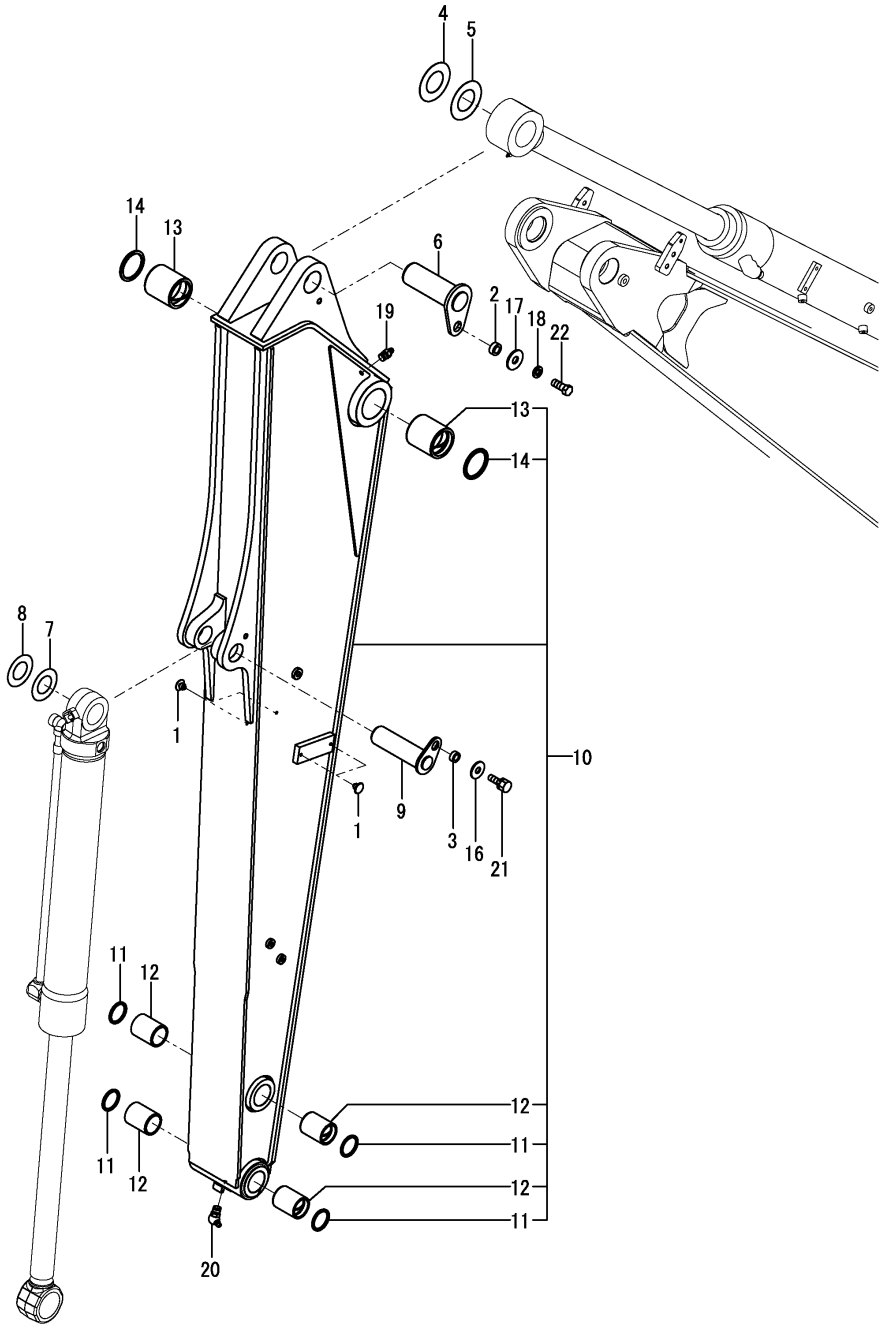

No.	Lev.	Parts No.	Description	Q'ty (A)	(B)	(C)	(D)	(E)	(F)	I	R
1	1	172444-17660	CLIP, TREE	4							
2	1	172155-45790	SPACER	1							
3	1	172164-81670	SPACER	1							
4	1	172175-81700	SHIM	1							
5	1	172175-81710	SHIM	1							
6	1	172499-81800	PIN	1							
7	1	172165-82520	SHIM	1							
8	1	172165-82530	SHIM	1							
9	1	172455-83300	PIN ASSY	1							
10	1	172B12-83690	ARM ASSY, 2300	1							
11	2	172448-54120	SEAL, DUST	4							
12	2	172187-81710	BUSH	4							
13	2	172162-82280	BUSH	2							
14	2	172162-82350	SEAL, DUST	2							
16	1	22157-120000	WASHER, 12	1							
17	1	22157-140000	WASHER, 14	1							
18	1	22217-140000	WASHER, SPRING 14	1							
19	1	24761-020000	NIPPLE, GREASE PT1/8	1							
20	1	24761-040000	NIPPLE, GREASE B	1							
21	1	26013-120302	BOLT, SPRING M12X 30	1							
22	1	26116-140352	BOLT, M14X 35 PLATED	1							

N:Old $\frac{\text{Yes}}{\text{No}}$ New, Q:Old $\frac{\text{No}}{\text{Yes}}$ New, R:Old $\frac{\text{Yes}}{\text{Yes}}$ New, S:Old $\frac{\text{No}}{\text{No}}$ New, W:Add, Z:Discontinued, F:Interchangeable by set, K:Q'ty Change

Copyright (C) 2015 YANMAR CO., LTD. All RightsReserved.

Fig.149. BUCKET ARM & LINK

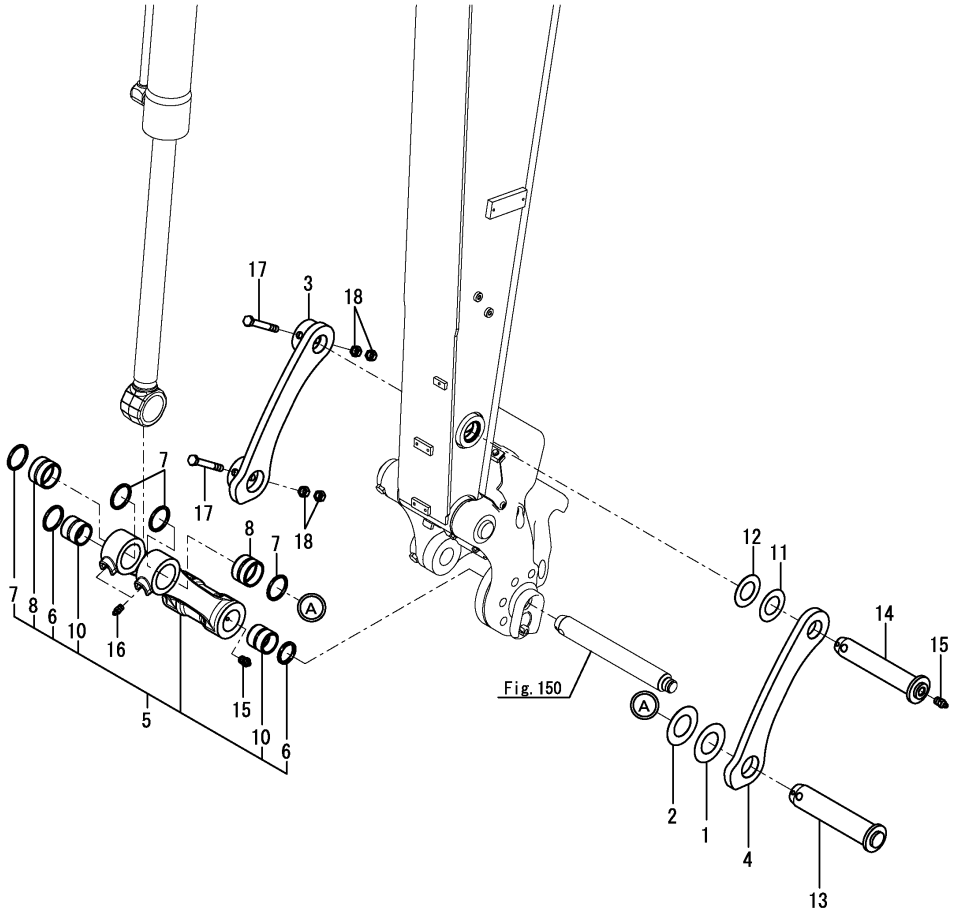

(A)=SV100-2A C(US)
(B)=
(C)=
(D)=
(E)=
(F)=

No.	Lev.	Parts No.	Description	Q'ty (A)	(B)	(C)	(D)	(E)	(F)	I	R
1	1	172175-81700	SHIM	1							
2	1	172175-81710	SHIM	1							
3	1	172455-82380-Y	ARM, BUCKET	1							
4	1	172455-82391-Y	ARM, BUCKET	1							
5	1	172499-82400-Y	LINK, BUCKET	1							
6	2	172448-54120	SEAL, DUST	2							
7	2	172168-54760	SEAL, DUST	4							
8	2	172455-82360	BUSH	2							
10	2	172187-83040	BUSH	2							
11	1	172165-82520	SHIM	1							
12	1	172165-82530	SHIM	1							
13	1	172455-83350	PIN ASSY	1							
14	1	172455-83360	PIN ASSY	1							
15	1	24761-020000	NIPPLE, GREASE PT1/8	3							
16	1	24761-020000	NIPPLE, GREASE PT1/8	2							
17	1	26116-161202	BOLT, M16X120 PLATED	2							
18	1	26716-160002	NUT, M16	4							

N:Old $\xleftrightarrow[\text{No}]{\text{Yes}}$ New, Q:Old $\xleftrightarrow[\text{Yes}]{\text{No}}$ New, R:Old $\xleftrightarrow[\text{Yes}]{\text{Yes}}$ New, S:Old $\xleftrightarrow[\text{No}]{\text{No}}$ New, W:Add, Z:Discontinued, F:Interchangeable by set, K:Q'ty Change

Copyright (C) 2015 YANMAR CO., LTD. All RightsReserved.

Fig.150. QUICK COUPLER

(A)=SV100-2A C(US) (D)=
(B)= (E)=
(C)= (F)=

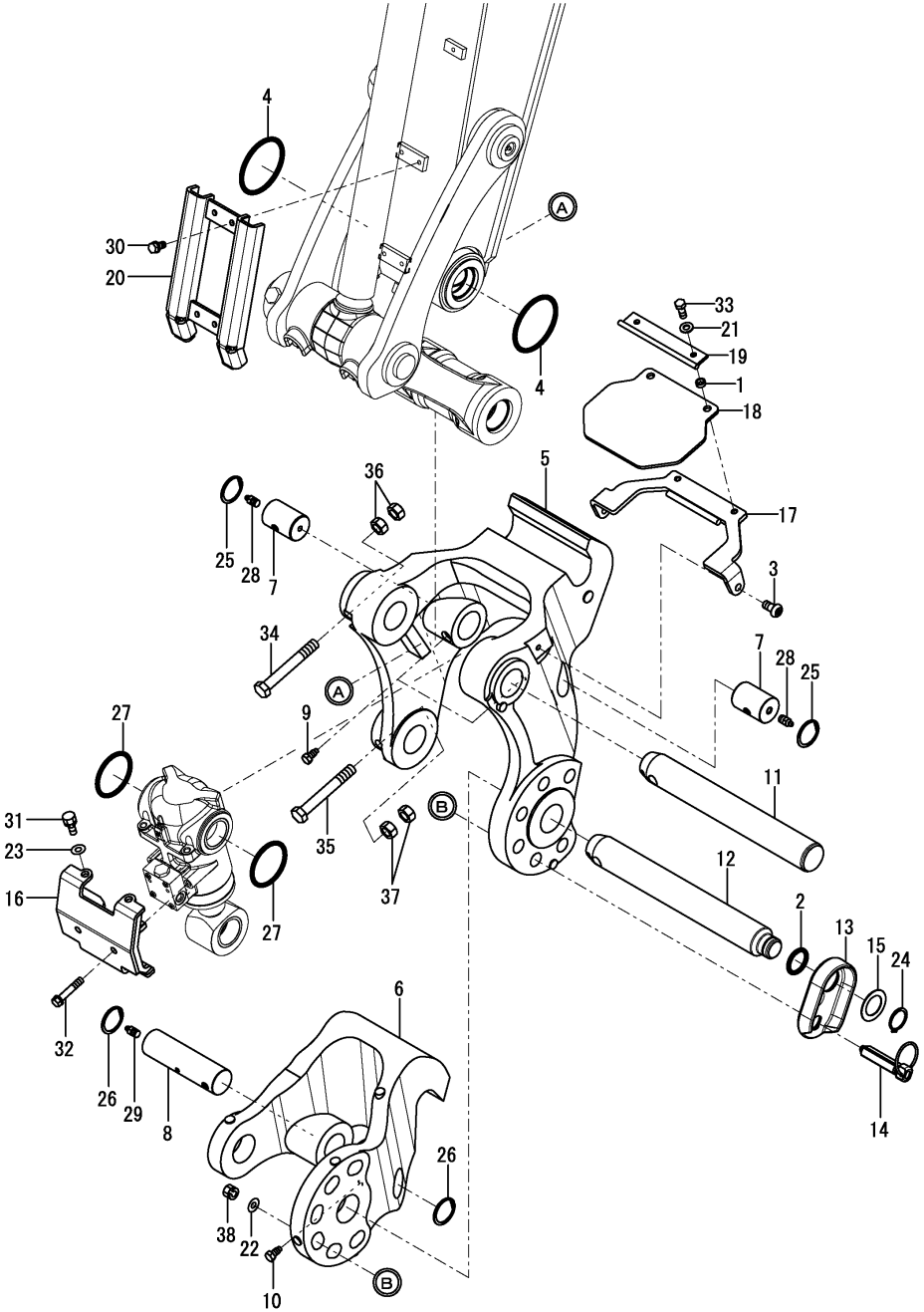

No.	Lev.	Parts No.	Description	Q'ty (A)	(B)	(C)	(D)	(E)	(F)	I	R
1	1	172958-17121	COLLAR, 9X4	2							
2	1	172124-46200	O-RING	1							
3	1	172455-61720	BOLT	2							
4	1	172162-82360	O-RING	2							
5	1	172978-83101-Y	BRACKET A	1							
6	1	172978-83111-Y	BRACKET B	1							
7	1	172978-83120	PIN 45X65	2							
8	1	172978-83130	PIN 45X161	1							
9	1	172978-83140	BOLT	2							
10	1	172978-83140	BOLT	1							
11	1	172978-83150	PIN 50X345	1							
12	1	172978-83161	PIN 50X373	1							
13	1	172978-83170-Y	PLATE,LOCK	1							
14	1	172978-83191	PIN,LOCK	1							
15	1	172960-83210	COLLAR	1							
16	1	172978-83221-Y	COVER, HITCH	1							
17	1	172978-83270-Y	GUARD ASSY	1							
18	1	172978-83292	PLATE,RUBBER	1							
19	1	172978-83300-Y	PLATE	1							
20	1	172978-83320-Y	COVER, ARM	1							
21	1	22137-080000	WASHER, 8	2							
22	1	22137-100000	WASHER, 10	1							
23	1	22137-100000	WASHER, 10	2							
24	1	22242-000350	RING, 35	1							
25	1	22252-000450	RING, 45	2							
26	1	22252-000450	RING, 45	2							
27	1	24311-000700	O-RING, 1AP70.0	2							
28	1	24761-020000	NIPPLE, GREASE PT1/8	2							
29	1	24761-020000	NIPPLE, GREASE PT1/8	1							
30	1	26013-080162	BOLT, SPRING M8X 16	4							
31	1	26013-100252	BOLT, SPRING M10X 25	2							
32	1	26013-100502	BOLT, SPRING M10X 50	2							
33	1	26116-080202	BOLT, M8X 20 PLATED	2							
34	1	26116-161202	BOLT, M16X120 PLATED	1							
35	1	26116-161202	BOLT, M16X120 PLATED	1							
36	1	26716-160002	NUT, M16	2							
37	1	26716-160002	NUT, M16	2							
38	1	26756-100002	NUT, LOCK M10	1							

N:Old ◄Yes/No► New, Q:Old ◄No/Yes► New, R:Old ◄Yes/Yes► New, S:Old ◄No/No► New, W:Add, Z:Discontinued, F:Interchangeable by set, K:Q'ty Change

Copyright (C) 2015 YANMAR CO., LTD. All RightsReserved.

Fig.151. PLUG(IMPLEMENT)

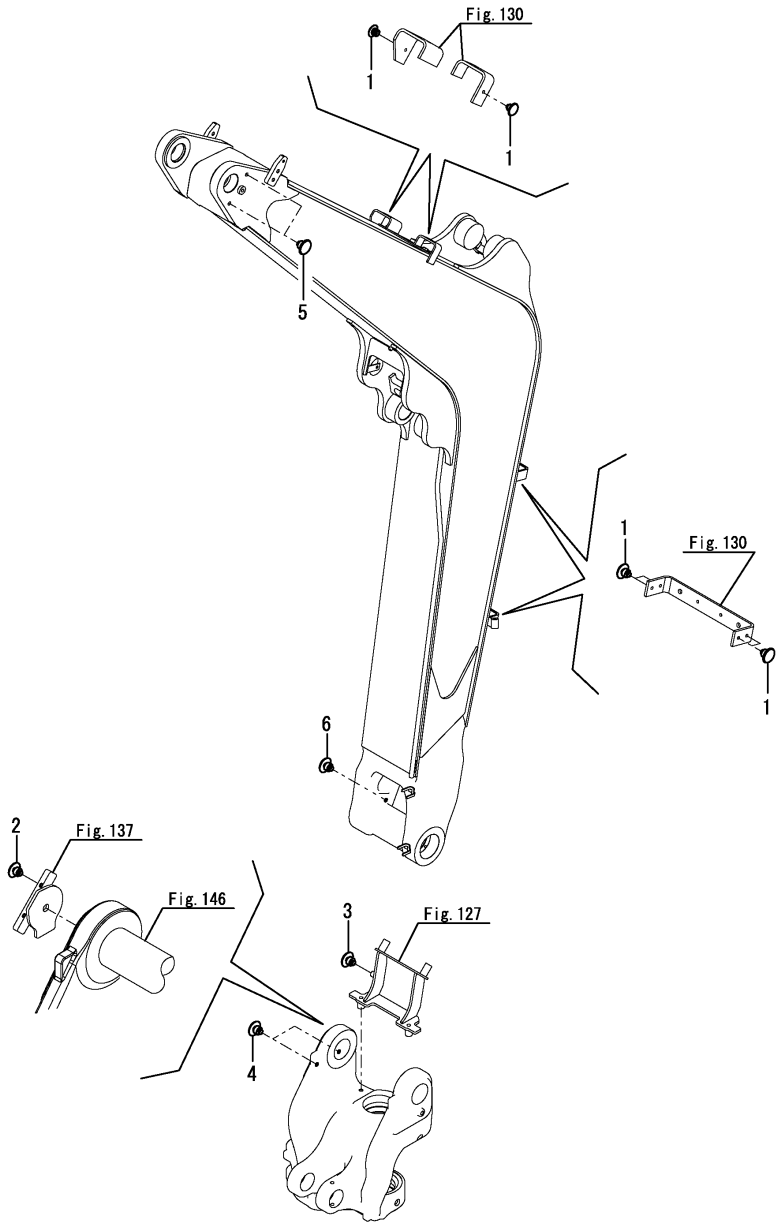

(A)=SV100-2A C(US) (D)=
(B)= (E)=
(C)= (F)=

No.	Lev.	Parts No.	Description	Q'ty (A)	(B)	(C)	(D)	(E)	(F)	I	R
1	1	172444-17660	CLIP, TREE	10							
2	1	172444-17660	CLIP, TREE	3							
2-1	1	172B11-76900	CLIP, TREE 8	3						N	
	(A=*2015.07.)										
3	1	172183-81160	CLIP, TREE	1							
4	1	172176-68210	CLIP, TREE	2							
5	1	172176-68210	CLIP, TREE	2							
6	1	172183-81160	CLIP, TREE	1							

N:Old $\xleftrightarrow[\text{No}]{\text{Yes}}$ New, Q:Old $\xleftrightarrow[\text{Yes}]{\text{No}}$ New, R:Old $\xleftrightarrow[\text{Yes}]{\text{Yes}}$ New, S:Old $\xleftrightarrow[\text{No}]{\text{No}}$ New, W:Add, Z:Discontinued, F:Interchangeable by set, K:Q'ty Change

Copyright (C) 2015 YANMAR CO., LTD. All RightsReserved.

Fig.152. BLADE

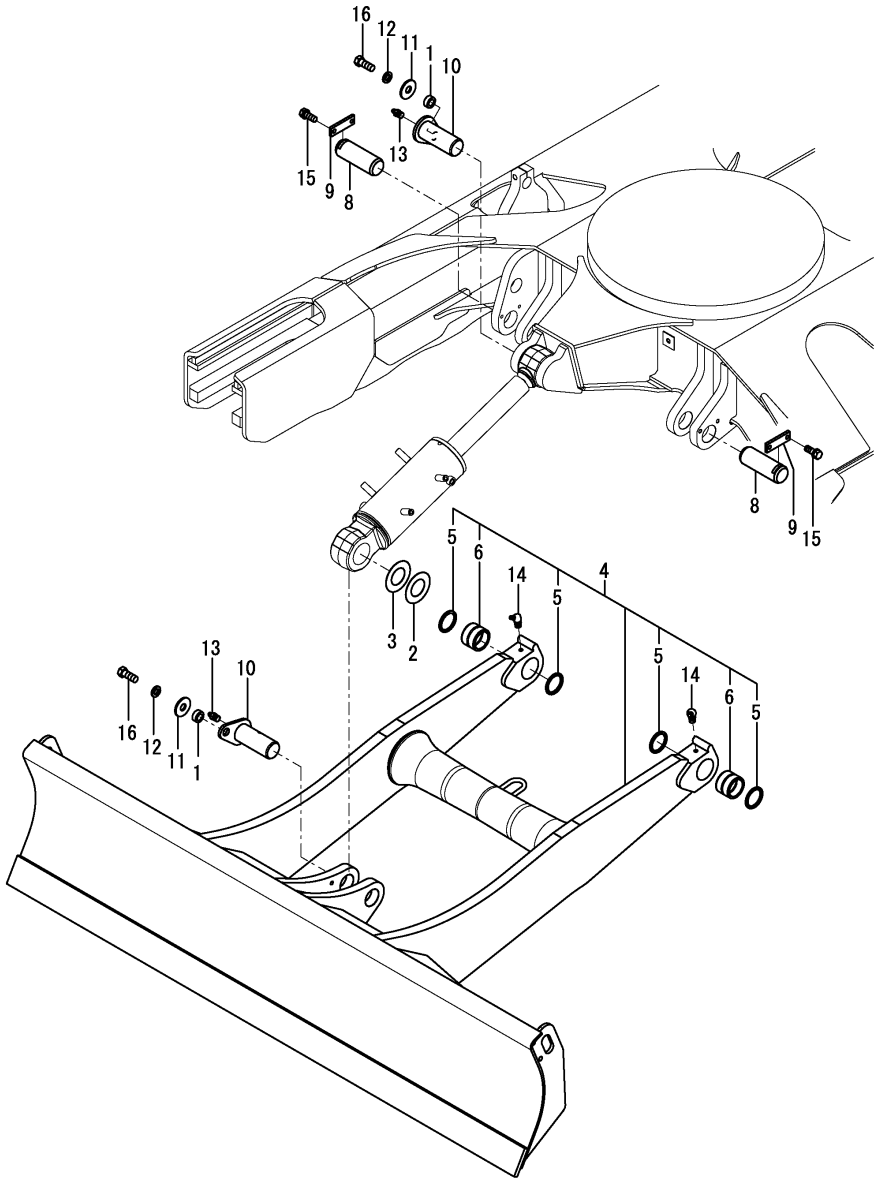

(A)=SV100-2A C(US)
(B)=
(C)=
(D)=
(E)=
(F)=

No.	Lev.	Parts No.	Description	Q'ty (A)	(B)	(C)	(D)	(E)	(F)	I	R
1	1	172155-45790	SPACER	2							
2	1	172175-81700	SHIM	1							
3	1	172175-81710	SHIM	1							
4	1	172A69-94100	BLADE ASSY	1							
5	2	172020-10620	SEAL, DUST	4							
6	2	172162-81060	BUSH	2							
8	1	172162-94270	PIN	2							
9	1	172162-94280-3	PLATE, LOCK	2							
10	1	172187-94300	PIN ASSY	2							
11	1	22157-140000	WASHER, 14	2							
12	1	22217-140000	WASHER, SPRING 14	2							
13	1	24761-020000	NIPPLE, GREASE PT1/8	2							
14	1	24761-040000	NIPPLE, GREASE B	2							
15	1	26013-120302	BOLT, SPRING M12X 30	4							
16	1	26116-140352	BOLT, M14X 35 PLATED	2							

N:Old $\frac{\text{Yes}}{\text{No}}$ New, Q:Old $\frac{\text{No}}{\text{Yes}}$ New, R:Old $\frac{\text{Yes}}{\text{Yes}}$ New, S:Old $\frac{\text{No}}{\text{No}}$ New, W:Add, Z:Discontinued, F:Interchangeable by set, K:Q'ty Change

Copyright (C) 2015 YANMAR CO., LTD. All RightsReserved.

Fig.153. LABEL KIT(FOR CANADA)(OPTIONAL)

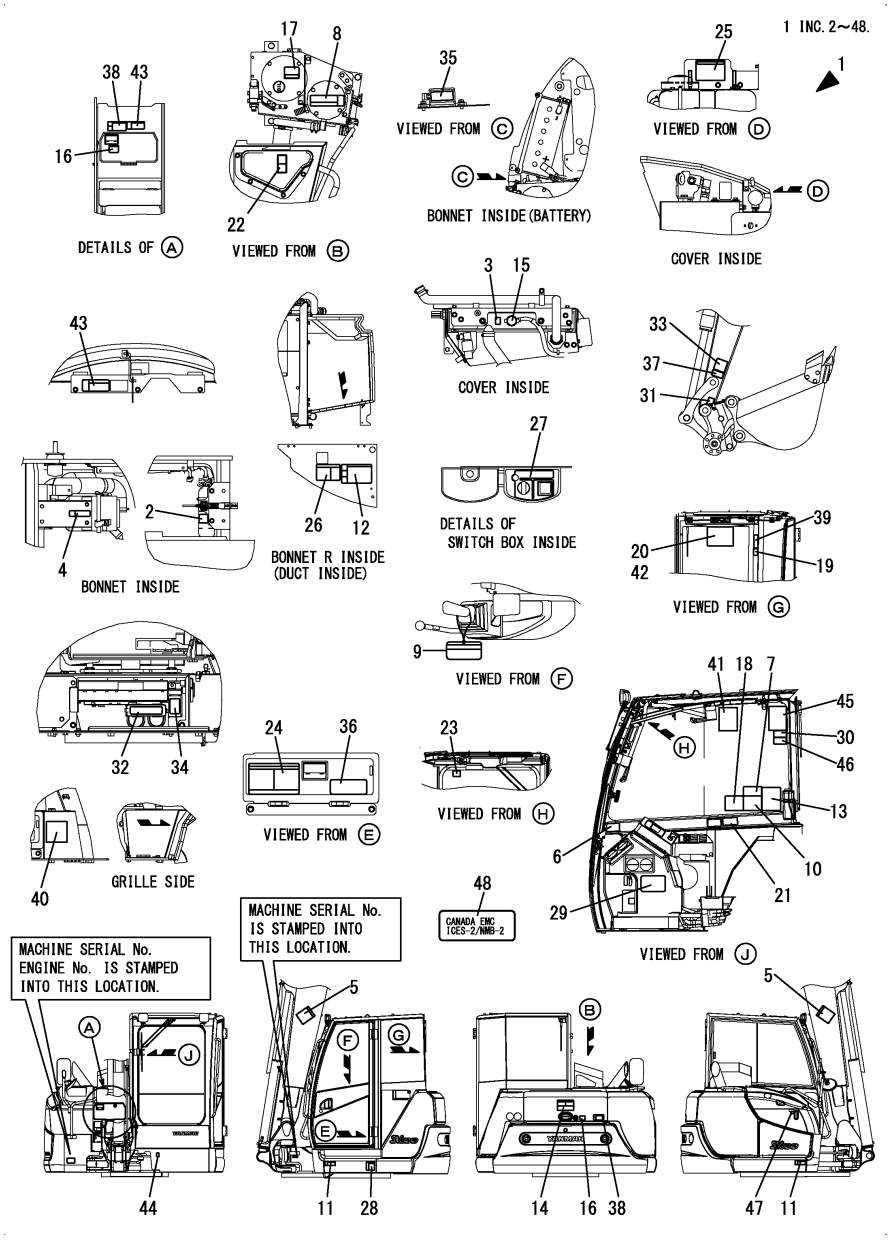

(A)=SV100-2A C(US) (D)=
(B)= (E)=
(C)= (F)=

No.	Lev.	Parts No.	Description	Q'ty (A)	(B)	(C)	(D)	(E)	(F)	I	R
1	1	172B12-03070	LABEL KIT,CA T4	1							
2	2	172A37-03150	LABEL,SUB-TANK CA	1							
3	2	172A37-03160	LABEL,ANTI-FREEZE CA	1							
4	2	172A37-03180	LABEL J, AIR CLEANER	1							
5	2	172A37-03200	LABEL,BOOM CA	2							
6	2	172A37-03231	LABEL,MANUAL CA.	1							
7	2	172A37-03241	LABEL,SLOPE CA.	1							
8	2	172A37-03250	LABEL,RESERVOIR CA	1							
9	2	172469-03261	TAG,SERVICING ASSY	1							
10	2	172A37-03271	LABEL,TRANSPORT CA.	1							
11	2	172A37-03280	LABEL,GREASE CYL CA	2							
12	2	172A37-03290	LABEL,BATTERY CA	1							
13	2	172A37-03300	LABEL,NEWTRAL CA	1							
14	2	172A37-03310	LABEL,SWING AREA CA	1							
15	2	172469-03320	LABEL,RADIATOR CAP	1							
16	2	172A37-03330	LABEL,ENGINE COVER	2							
17	2	172469-03360	LABEL,OIL	1							
18	2	172A37-03360	LABEL,STERRING CA	1							
19	2	172A37-03370	LABEL,ROPS CA	1							
20	2	172B12-03370	LABEL, LIFT Q CA	1							
20-1	2	172B12-03371	LABEL, LIFT CA	1						N	
	(A=MAF079)										
21	2	172A37-03400	LABEL,LEVER LOCK CA	1							
22	2	172A37-03410	LABEL,RADIATOR CA	1							
23	2	172A37-03420	LABEL,WINDOW CA	1							
24	2	172A37-03430	LABEL,2 WAY CA	1							
25	2	172A69-03430	LABEL,GREASING CA	1							
26	2	172A69-03450	LABEL,BATTERY COVER	1							
27	2	172469-03480	LABEL,SWITCH	1							
28	2	172A37-03500	LABEL,SUPPORT CA	1							
29	2	172B12-03510	LABEL, FEED CA T4	1							
30	2	172A37-03520	LABEL,PIN CA	1							
31	2	172A37-03530	LABEL,FINGER CA	1							
32	2	172B11-03530	LABEL,RELAY BOX CA	1							
33	2	172469-03540	LABEL,OPERATION PIN	1							
34	2	172B11-03550	LABEL,FUSE BOX CA T4	1							
35	2	172B11-03570	LABEL,LF CA	1							
36	2	172B12-03580	LABEL, SPEC CA T4	1							
37	2	172A37-03680	LABEL,LOCK PIN CA	1							
38	2	172A37-03710	LABEL,ENGROOM CA	2							
39	2	172A37-03720	LABEL,SEAT BELT CA	1							
40	2	172A37-03760	LAVEL,ADJUST CRAWLER	1							
41	2	172B04-03860	LABEL, DPF CA	1							
42	2	172B12-03940	LABEL, LIFT CA LONG	1							1
42-1	2	172B12-03941	LABEL, LIFT CA LONG	1						N	
	(A=MAF079)										
43	2	172B03-04530	LABEL,SILENCER CA	2							
44	2	172B03-04580	LABEL, GREASE CA	1							
45	2	172B03-04600	LABEL,WARNING HITCH	1							
46	2	172B03-04610	LABEL,SAND CA	1							
47	2	129942-07761	LABEL, FUEL OIL CAUT	1							

N:Old $\xleftarrow[\text{No}]{\text{Yes}}$ New, Q:Old $\xleftarrow[\text{Yes}]{\text{No}}$ New, R:Old $\xleftarrow[\text{Yes}]{\text{Yes}}$ New, S:Old $\xleftarrow[\text{No}]{\text{No}}$ New, W:Add, Z:Discontinued, F:Interchangeable by set, K:Q'ty Change

Remarks
* The tablet except mention is the same as US specification.
(1)Long arm specification.

++ CONTINUE ++

Copyright (C) 2015 YANMAR CO., LTD. All RightsReserved.

Fig.153. LABEL KIT(FOR CANADA)(OPTIONAL)

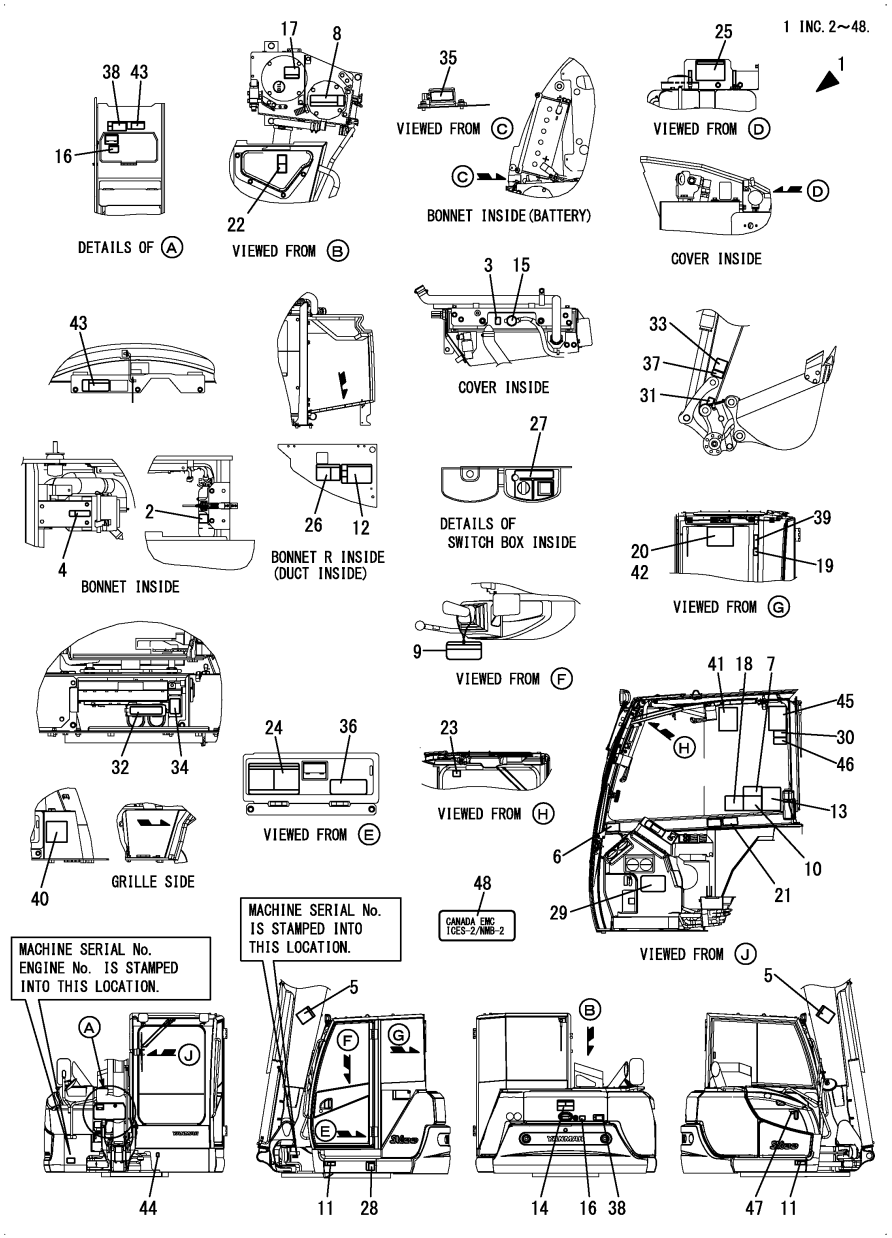

(A)=SV100-2A C(US)
(B)=
(C)=
(D)=
(E)=
(F)=

No.	Lev.	Parts No.	Description	Q'ty (A)	(B)	(C)	(D)	(E)	(F)	I	R
48	2	172B03-03230	LABEL,EMC	1						W	
	(A=*2016.10.)										

Remarks
* The tablet except mention is the same as US specification.
(1)Long arm specification.

N:Old ←Yes/No→ New, Q:Old ←No/Yes→ New, R:Old ←Yes/Yes→ New, S:Old ←No/No→ New, W:Add, Z:Discontinued, F:Interchangeable by set, K:Q'ty Change

Copyright (C) 2015 YANMAR CO., LTD. All RightsReserved.

Fig.154. DIAL KIT FOR P.T.O. FLOW RATE ADJUSTMENT(OPTIONAL)

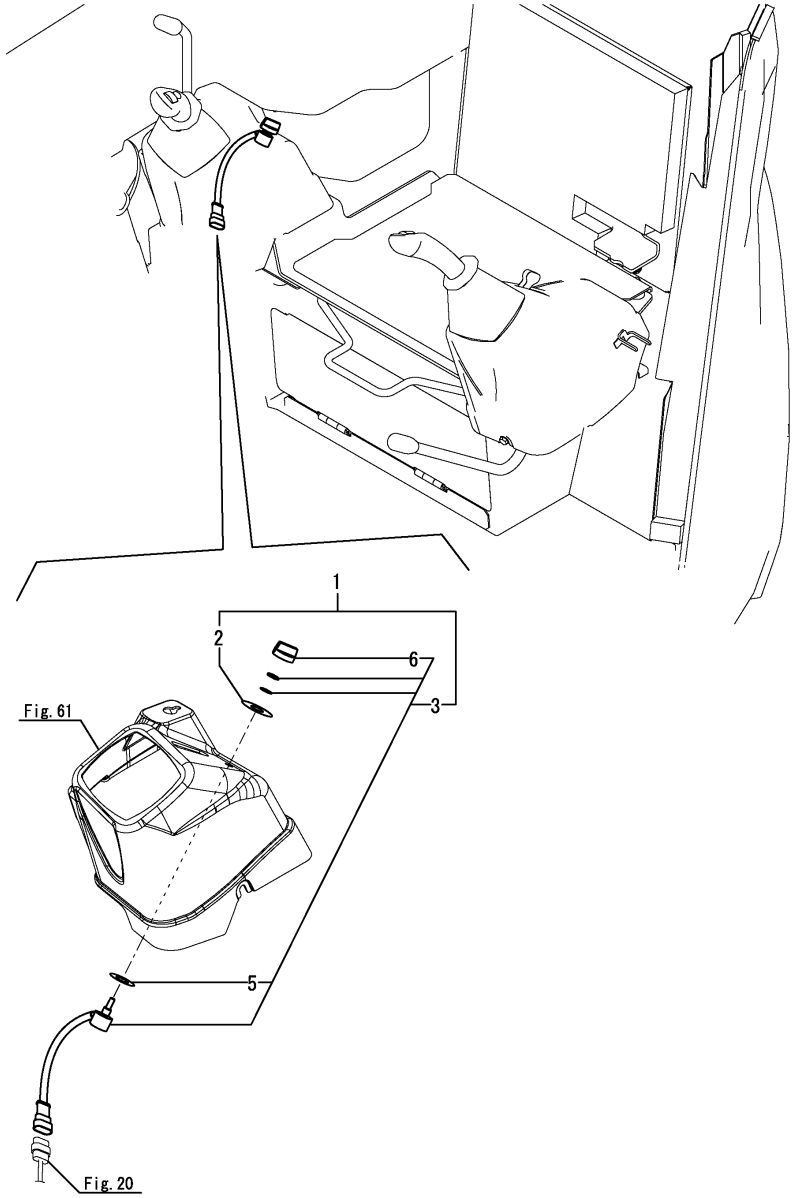

(A)=SV100-2A C(US)
(B)=
(C)=
(D)=
(E)=
(F)=

No.	Lev.	Parts No.	Description	Q'ty (A)	(B)	(C)	(D)	(E)	(F)	I	R
1	1	172B11-08310	SENSOR KIT	1							
2	2	172B11-03420	LABEL,PROPORTIONAL	1							
3	2	172B11-17251	SENSOR ASSY, VOLUME	1							
5	3	172B11-17270	WASHER, 10X18X2	1							
6	3	172B11-17301	KNOB ASSY	1							

N:Old $\xleftrightarrow[\text{No}]{\text{Yes}}$ New, Q:Old $\xleftrightarrow[\text{Yes}]{\text{No}}$ New, R:Old $\xleftrightarrow[\text{Yes}]{\text{Yes}}$ New, S:Old $\xleftrightarrow[\text{No}]{\text{No}}$ New, W:Add, Z:Discontinued, F:Interchangeable by set, K:Q'ty Change

Copyright (C) 2015 YANMAR CO., LTD. All RightsReserved.

Fig.155. P.T.O. 2 KIT(BOOM END)(OPTIONAL)(1/7)

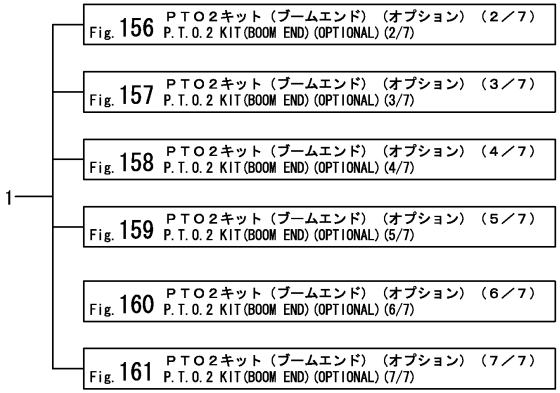

(A)=SV100-2A C(US) (D)=
(B)= (E)=
(C)= (F)=

No.	Lev.	Parts No.	Description	Q'ty (A)	(B)	(C)	(D)	(E)	(F)	I	R
1	1	172B11-08700	PTO KIT,BOOM END 2	1							1

Remarks
(1)Refer to each figure, showing details of kit parts.

N:Old ←Yes/No→ New, Q:Old ←No/Yes→ New, R:Old ←Yes/Yes→ New, S:Old ←No/No→ New, W:Add, Z:Discontinued, F:Interchangeable by set, K:Q'ty Change

Copyright (C) 2015 YANMAR CO., LTD. All RightsReserved.

Fig.156. P.T.O. 2 KIT(BOOM END)(OPTIONAL)(2/7)

(A)=SV100-2A C(US)
(B)=
(C)=
(D)=
(E)=
(F)=

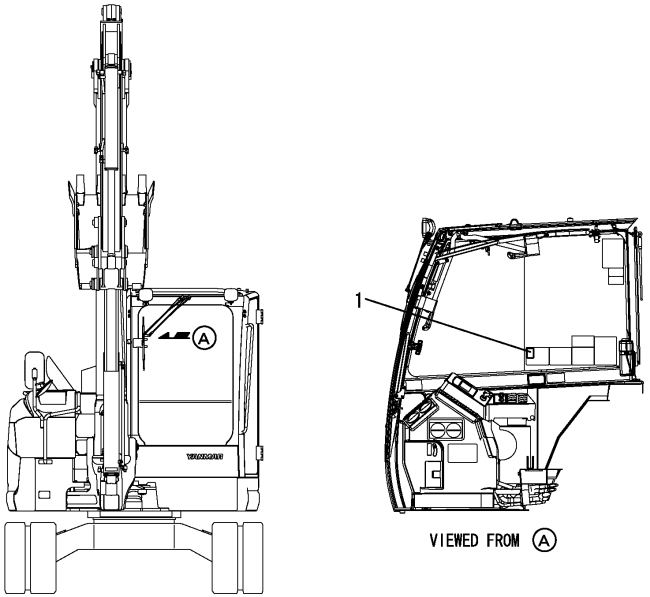

No.	Lev.	Parts No.	Description	Q'ty (A)	(B)	(C)	(D)	(E)	(F)	I	R
1	2	172B11-03410	LABEL,PTO	1							

N:Old ◄Yes/No► New, Q:Old ◄No/Yes► New, R:Old ◄Yes/Yes► New, S:Old ◄No/No► New, W:Add, Z:Discontinued, F:Interchangeable by set, K:Q'ty Change

Copyright (C) 2015 YANMAR CO., LTD. All RightsReserved.

Fig.157. P.T.O. 2 KIT(BOOM END)(OPTIONAL)(3/7)

(A)=SV100-2A C(US)
(B)=
(C)=
(D)=
(E)=
(F)=

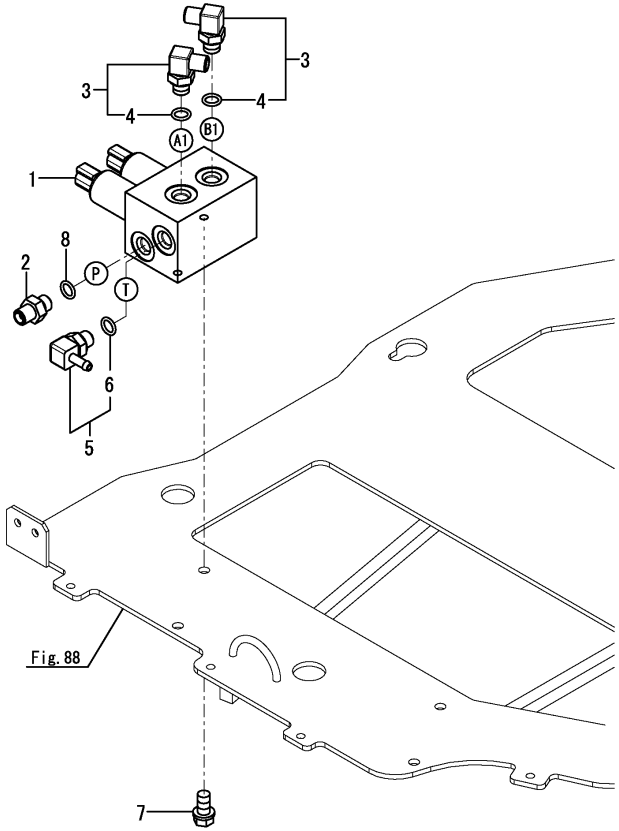

No.	Lev.	Parts No.	Description	Q'ty (A)	(B)	(C)	(D)	(E)	(F)	I	R
1	2	172B11-74410	VALVE ASSY,PTO	1							
2	2	172123-76121	ADAPTER PF1/2	1							
3	2	172141-76181	CONNECTOR ASSY, 02FF	2							
4	3	41851-000110	PACKING, 11.0	2							
5	2	172186-76430	NIPPLE, ELBOW PF1/4	1							
6	3	24315-000110	PACKING, P 11.0	1							
7	2	26013-080162	BOLT, SPRING M8X 16	2							
8	2	41851-000110	PACKING, 11.0	1							

N:Old $\frac{\text{Yes}}{\text{No}}$ New, Q:Old $\frac{\text{No}}{\text{Yes}}$ New, R:Old $\frac{\text{Yes}}{\text{Yes}}$ New, S:Old $\frac{\text{No}}{\text{No}}$ New, W:Add, Z:Discontinued, F:Interchangeable by set, K:Q'ty Change

Copyright (C) 2015 YANMAR CO., LTD. All RightsReserved.

Fig.158. P.T.O. 2 KIT(BOOM END)(OPTIONAL)(4/7)

(A)=SV100-2A C(US)
(B)=
(C)=
(D)=
(E)=
(F)=

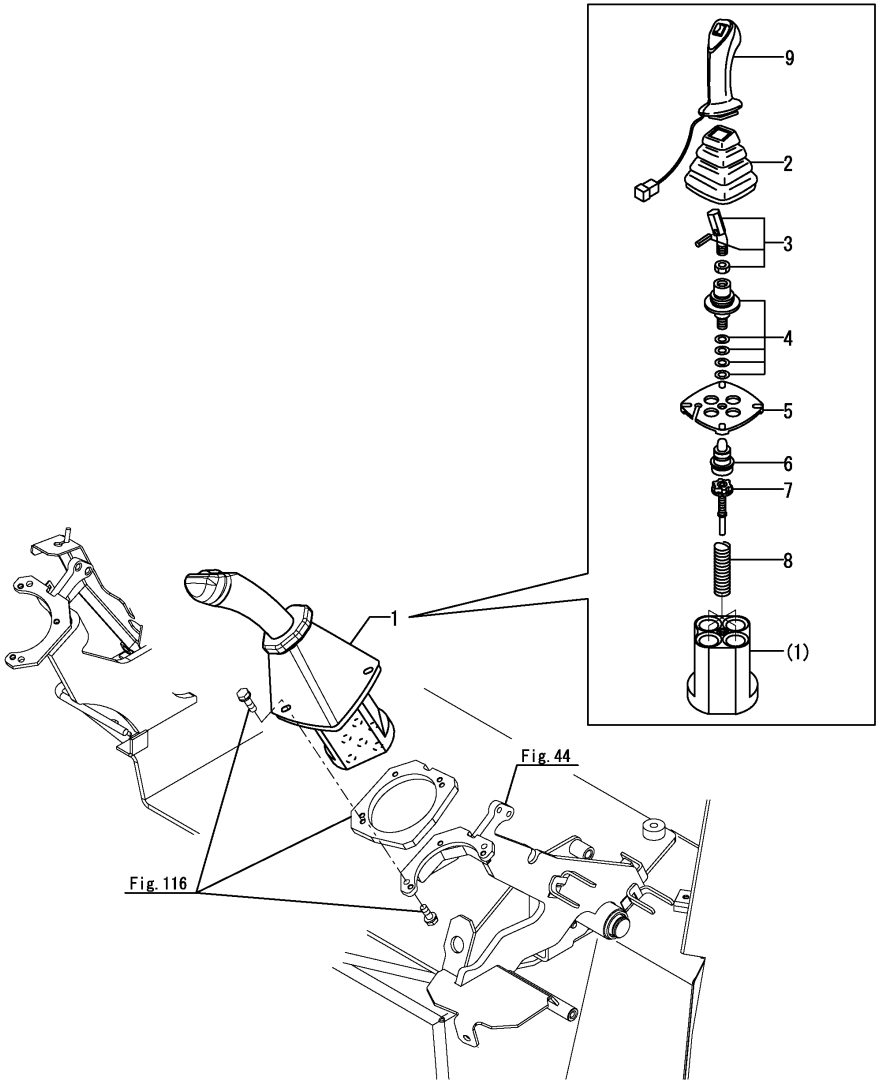

No.	Lev.	Parts No.	Description	Q'ty (A)	(B)	(C)	(D)	(E)	(F)	I	R
1	2	172B11-74900	VALVE ASSY,L	1							
2	3	172441-74030	RUBBER BOOT	1							
3	3	172441-74040	COMMAND KIT	1							
4	3	172463-74530	CARDAN KIT	1							
5	3	172463-74540	RETAINING PLATE	1							
6	3	172463-74551	PLUNGER KIT	1							
7	3	172463-74561	REGULATION KIT	4							
8	3	172463-74570	SPRING KIT	1							
9	3	172B11-74910	HANDLE ASSY	1							

N:Old $\overset{\text{Yes}}{\underset{\text{No}}{\leftrightarrows}}$ New, Q:Old $\overset{\text{No}}{\underset{\text{Yes}}{\leftrightarrows}}$ New, R:Old $\overset{\text{Yes}}{\underset{\text{Yes}}{\leftrightarrows}}$ New, S:Old $\overset{\text{No}}{\underset{\text{No}}{\leftrightarrows}}$ New, W:Add, Z:Discontinued, F:Interchangeable by set, K:Q'ty Change

Copyright (C) 2015 YANMAR CO., LTD. All RightsReserved.

Fig.159. P.T.O. 2 KIT(BOOM END)(OPTIONAL)(5/7)

(A)=SV100-2A C(US)
(B)=
(C)=
(D)=
(E)=
(F)=

No.	Lev.	Parts No.	Description	Q'ty (A)	(B)	(C)	(D)	(E)	(F)	I	R
1	2	172123-76121	ADAPTER PF1/2	2							
2	2	172141-76900	CONNECTOR ASSY, 1/2L	2							
3	3	24315-000180	PACKING, P 18.0	2							
4	2	41851-000110	PACKING, 11.0	2							

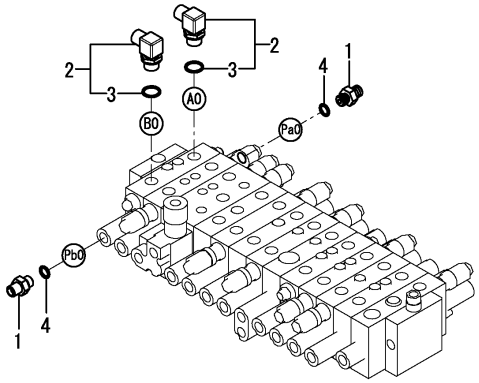

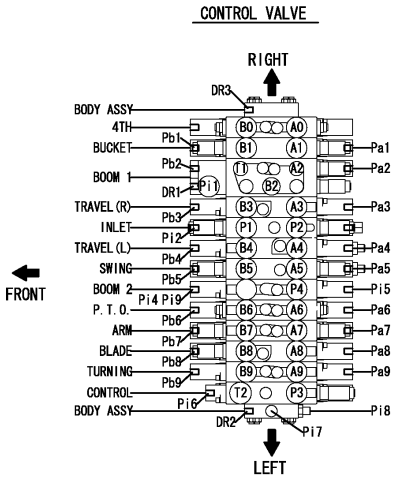

N:Old ←Yes/No→ New, Q:Old ←No/Yes→ New, R:Old ←Yes/Yes→ New, S:Old ←No/No→ New, W:Add, Z:Discontinued, F:Interchangeable by set, K:Q'ty Change

Copyright (C) 2015 YANMAR CO., LTD. All RightsReserved.

Fig.160. P.T.O. 2 KIT(BOOM END)(OPTIONAL)(6/7)

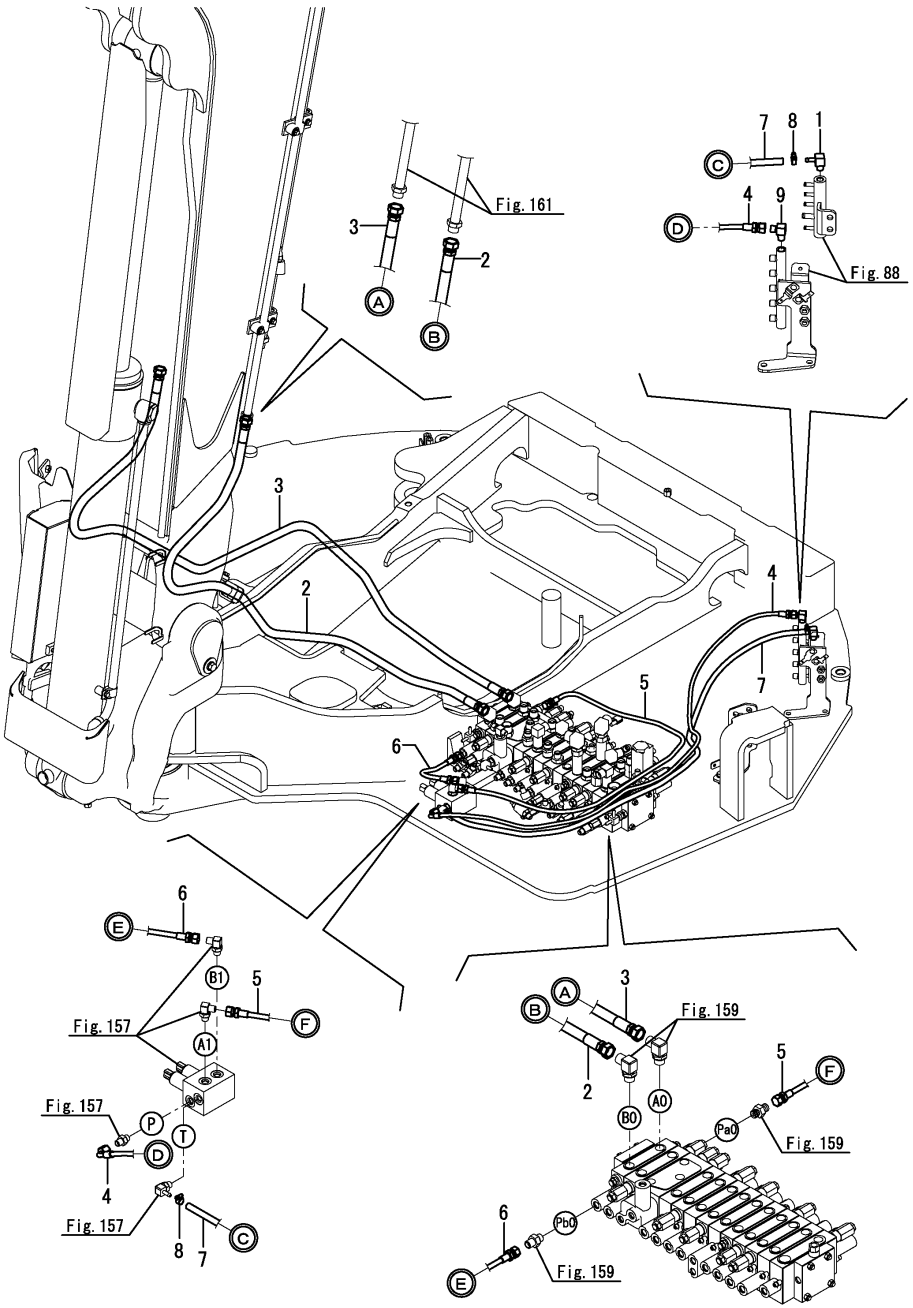

(A)=SV100-2A C(US)
(B)=
(C)=
(D)=
(E)=
(F)=

No.	Lev.	Parts No.	Description	Q'ty (A)	(B)	(C)	(D)	(E)	(F)	I	R
1	2	172186-76390	NIPPLE, ELBOW 1/4	1							
2	2	172B11-79940	HOSE, H108BB238K	1							
3	2	172B11-79950	HOSE, H108BB238K	1							
4	2	172B11-79960	HOSE, F403BC150	1							
5	2	172B11-79970	HOSE, F403BB140	1							
6	2	172B11-79980	HOSE, H603BB027	1							
7	2	172B11-79990	HOSE, G604YY147	1							
8	2	23000-013000	CLAMP, HOSE 13	2							
9	2	23393-020000	JOINT, 90 RGI 1/4	1							

N:Old $\frac{\text{Yes}}{\text{No}}$ New, Q:Old $\frac{\text{No}}{\text{Yes}}$ New, R:Old $\frac{\text{Yes}}{\text{Yes}}$ New, S:Old $\frac{\text{No}}{\text{No}}$ New, W:Add, Z:Discontinued, F:Interchangeable by set, K:Q'ty Change

Copyright (C) 2015 YANMAR CO., LTD. All RightsReserved.

Fig.161. P.T.O. 2 KIT(BOOM END)(OPTIONAL)(7/7)

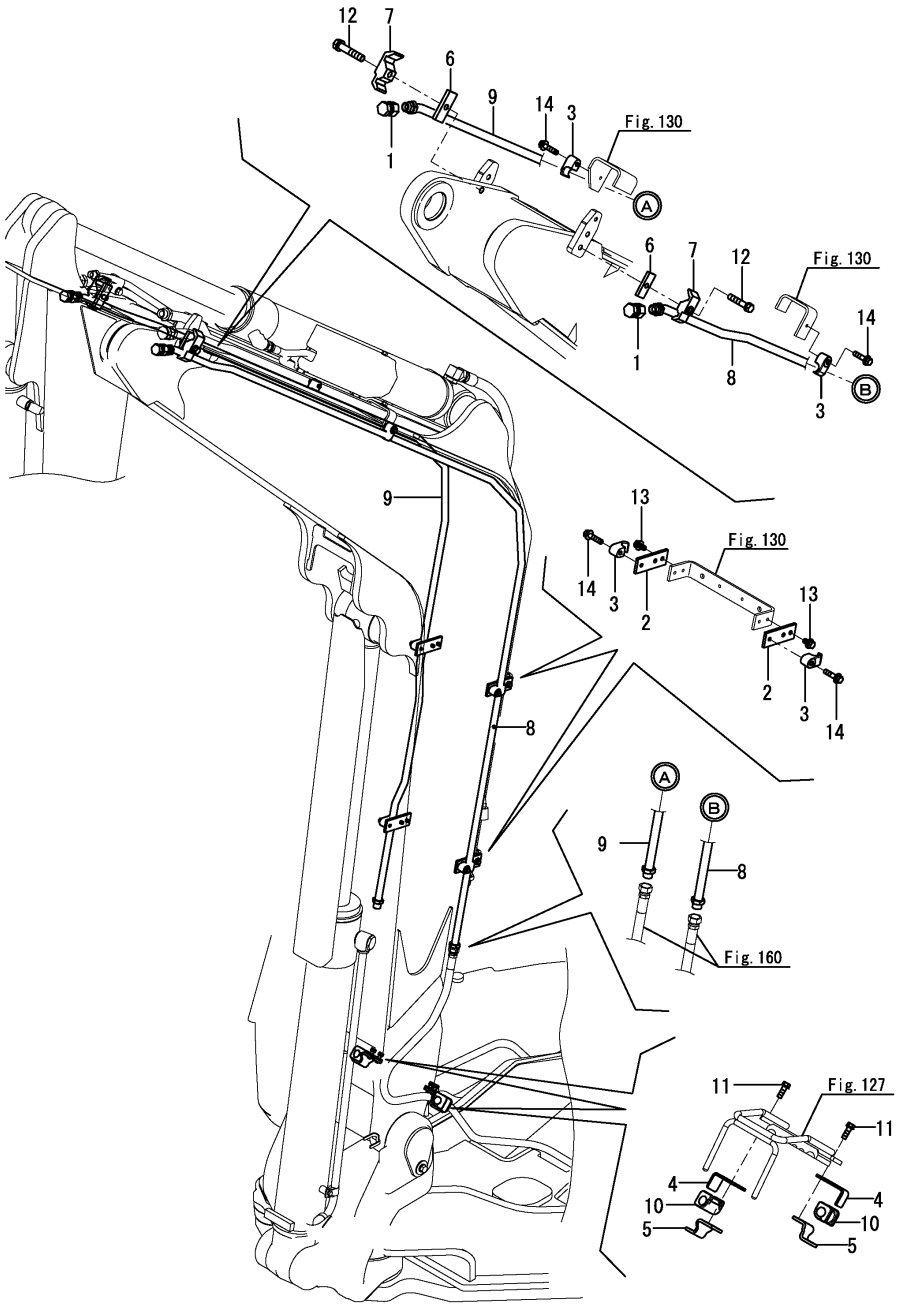

(A)=SV100-2A C(US)
(B)=
(C)=
(D)=
(E)=
(F)=

No.	Lev.	Parts No.	Description	Q'ty (A)	(B)	(C)	(D)	(E)	(F)	I	R
1	2	172137-75570	PLUG PF1/2	2							
2	2	172B11-76520	PLATE, CLAMP PTO2	4							
3	2	172B11-76550	CLAMP,1/2	6							
4	2	172B11-76560	CLAMP,A PTO2	2							
5	2	172B11-76570	CLAMP,B PTO2	2							
6	2	172175-76590-Y	PLATE, SPACER	2							
7	2	172125-76900-2	CLUMP	2							
8	2	172B11-77900	TUBE ASSY, PTO2 L	1							
9	2	172B11-77930	TUBE ASSY, PTO2 R	1							
10	2	172187-78100	RUBBER A, HOSE CLAMP	2							
11	2	26013-080252	BOLT, SPRING M8X 25	4							
12	2	26013-120602	BOLT, SPRING M12X 60	2							
13	2	26014-080162	BOLT, 8 X 16	8							
14	2	26014-080352	BOLT, 8 X 35	6							

N:Old $\xleftarrow[\text{No}]{\text{Yes}}$ New, Q:Old $\xleftarrow[\text{Yes}]{\text{No}}$ New, R:Old $\xleftarrow[\text{Yes}]{\text{Yes}}$ New, S:Old $\xleftarrow[\text{No}]{\text{No}}$ New, W:Add, Z:Discontinued, F:Interchangeable by set, K:Q'ty Change

Copyright (C) 2015 YANMAR CO., LTD. All RightsReserved.

Fig.162. P.T.O. 2 KIT(ARM END)(OPTIONAL)(1/7)

(A)=SV100-2A C(US)
(B)=
(C)=
(D)=
(E)=
(F)=

No.	Lev.	Parts No.	Description	Q'ty (A)	(B)	(C)	(D)	(E)	(F)	I	R
1	1	172B12-08710	PTO KIT,ARM END 2	1							1

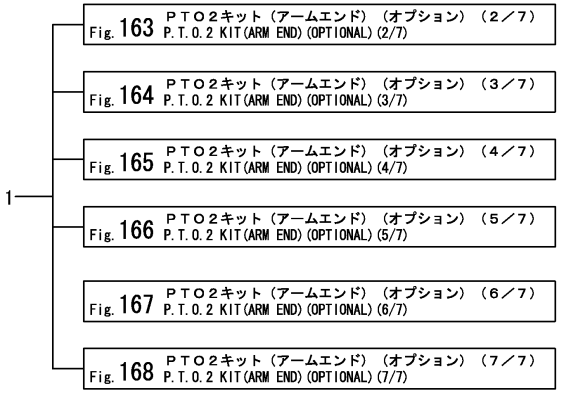

Remarks
(1)Refer to each figure, showing details of kit parts.

N:Old $\xleftrightarrow[\text{No}]{\text{Yes}}$ New, Q:Old $\xleftrightarrow[\text{Yes}]{\text{No}}$ New, R:Old $\xleftrightarrow[\text{Yes}]{\text{Yes}}$ New, S:Old $\xleftrightarrow[\text{No}]{\text{No}}$ New, W:Add, Z:Discontinued, F:Interchangeable by set, K:Q'ty Change

Copyright (C) 2015 YANMAR CO., LTD. All RightsReserved.

Fig.163. P.T.O. 2 KIT(ARM END)(OPTIONAL)(2/7)

(A)=SV100-2A C(US) (D)=
(B)= (E)=
(C)= (F)=

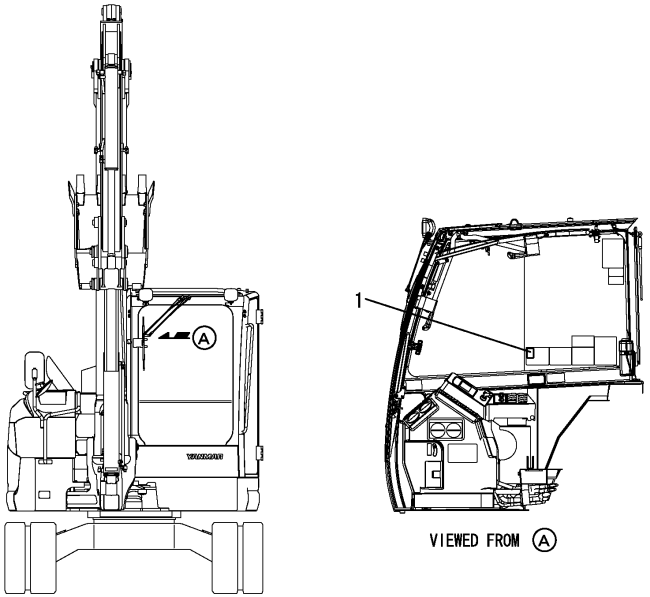

No.	Lev.	Parts No.	Description	Q'ty (A)	(B)	(C)	(D)	(E)	(F)	I	R
1	2	172B11-03410	LABEL,PTO	1							

N:Old ◄Yes/No► New, Q:Old ◄No/Yes► New, R:Old ◄Yes/Yes► New, S:Old ◄No/No► New, W:Add, Z:Discontinued, F:Interchangeable by set, K:Q'ty Change

Copyright (C) 2015 YANMAR CO., LTD. All RightsReserved.

Fig.164. P.T.O. 2 KIT(ARM END)(OPTIONAL)(3/7)

(A)=SV100-2A C(US)
(B)=
(C)=
(D)=
(E)=
(F)=

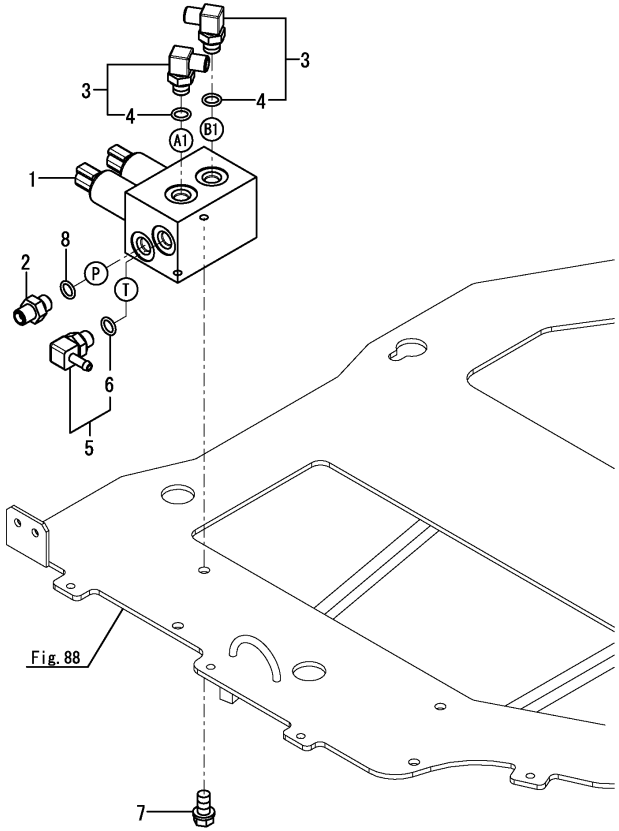

No.	Lev.	Parts No.	Description	Q'ty (A)	(B)	(C)	(D)	(E)	(F)	I	R
1	2	172B11-74410	VALVE ASSY,PTO	1							
2	2	172123-76121	ADAPTER PF1/2	1							
3	2	172141-76181	CONNECTOR ASSY, 02FF	2							
4	3	41851-000110	PACKING, 11.0	2							
5	2	172186-76430	NIPPLE, ELBOW PF1/4	1							
6	3	24315-000110	PACKING, P 11.0	1							
7	2	26013-080162	BOLT, SPRING M8X 16	2							
8	2	41851-000110	PACKING, 11.0	1							

N:Old $\frac{\text{Yes}}{\text{No}}$ New, Q:Old $\frac{\text{No}}{\text{Yes}}$ New, R:Old $\frac{\text{Yes}}{\text{Yes}}$ New, S:Old $\frac{\text{No}}{\text{No}}$ New, W:Add, Z:Discontinued, F:Interchangeable by set, K:Q'ty Change

Copyright (C) 2015 YANMAR CO., LTD. All RightsReserved.

Fig.165. P.T.O. 2 KIT(ARM END)(OPTIONAL)(4/7)

(A)=SV100-2A C(US)
(B)=
(C)=
(D)=
(E)=
(F)=

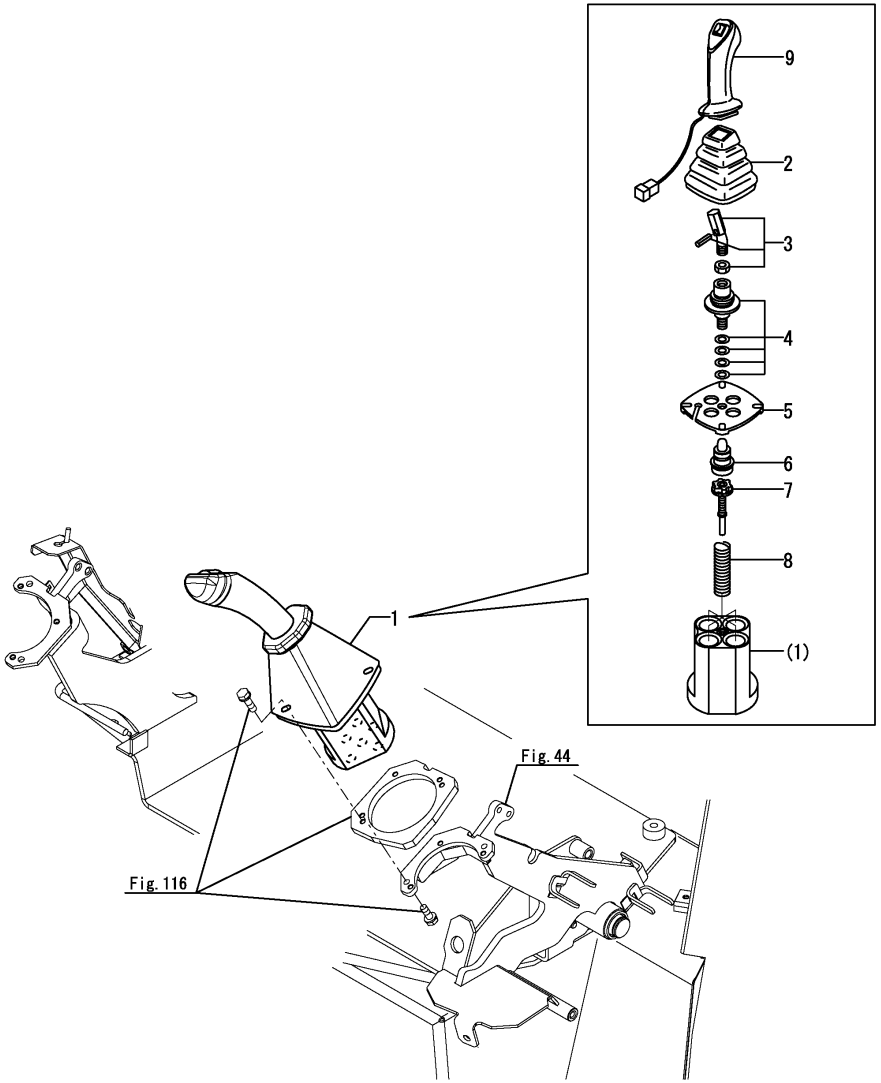

No.	Lev.	Parts No.	Description	Q'ty (A)	(B)	(C)	(D)	(E)	(F)	I	R
1	2	172B11-74900	VALVE ASSY,L	1							
2	3	172441-74030	RUBBER BOOT	1							
3	3	172441-74040	COMMAND KIT	1							
4	3	172463-74530	CARDAN KIT	1							
5	3	172463-74540	RETAINING PLATE	1							
6	3	172463-74551	PLUNGER KIT	1							
7	3	172463-74561	REGULATION KIT	4							
8	3	172463-74570	SPRING KIT	1							
9	3	172B11-74910	HANDLE ASSY	1							

N:Old $\overset{\text{Yes}}{\underset{\text{No}}{\leftrightarrows}}$ New, Q:Old $\overset{\text{No}}{\underset{\text{Yes}}{\leftrightarrows}}$ New, R:Old $\overset{\text{Yes}}{\underset{\text{Yes}}{\leftrightarrows}}$ New, S:Old $\overset{\text{No}}{\underset{\text{No}}{\leftrightarrows}}$ New, W:Add, Z:Discontinued, F:Interchangeable by set, K:Q'ty Change

Copyright (C) 2015 YANMAR CO., LTD. All RightsReserved.

Fig.166. P.T.O. 2 KIT(ARM END)(OPTIONAL)(5/7)

(A)=SV100-2A C(US)
(B)=
(C)=
(D)=
(E)=
(F)=

No.	Lev.	Parts No.	Description	Q'ty (A)	(B)	(C)	(D)	(E)	(F)	I	R
1	2	172123-76121	ADAPTER PF1/2	2							
2	2	172141-76900	CONNECTOR ASSY, 1/2L	2							
3	3	24315-000180	PACKING, P 18.0	2							
4	2	41851-000110	PACKING, 11.0	2							

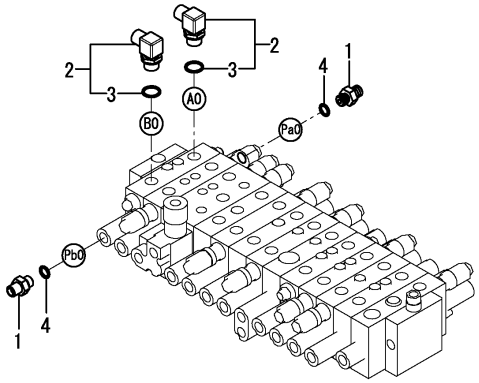

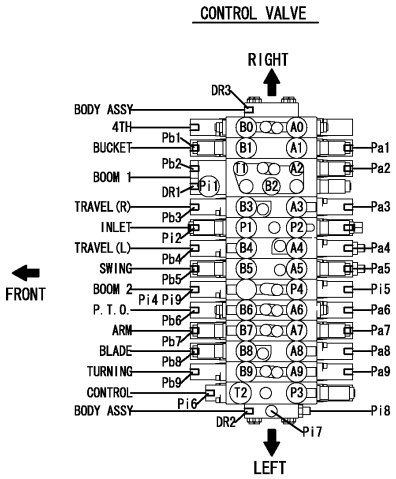

N:Old $\xleftarrow[\text{No}]{\text{Yes}}$ New, Q:Old $\xleftarrow[\text{Yes}]{\text{No}}$ New, R:Old $\xleftarrow[\text{Yes}]{\text{Yes}}$ New, S:Old $\xleftarrow[\text{No}]{\text{No}}$ New, W:Add, Z:Discontinued, F:Interchangeable by set, K:Q'ty Change

Copyright (C) 2015 YANMAR CO., LTD. All RightsReserved.

Fig.167. P.T.O. 2 KIT(ARM END)(OPTIONAL)(6/7)

(A)=SV100-2A C(US)
(B)=
(C)=
(D)=
(E)=
(F)=

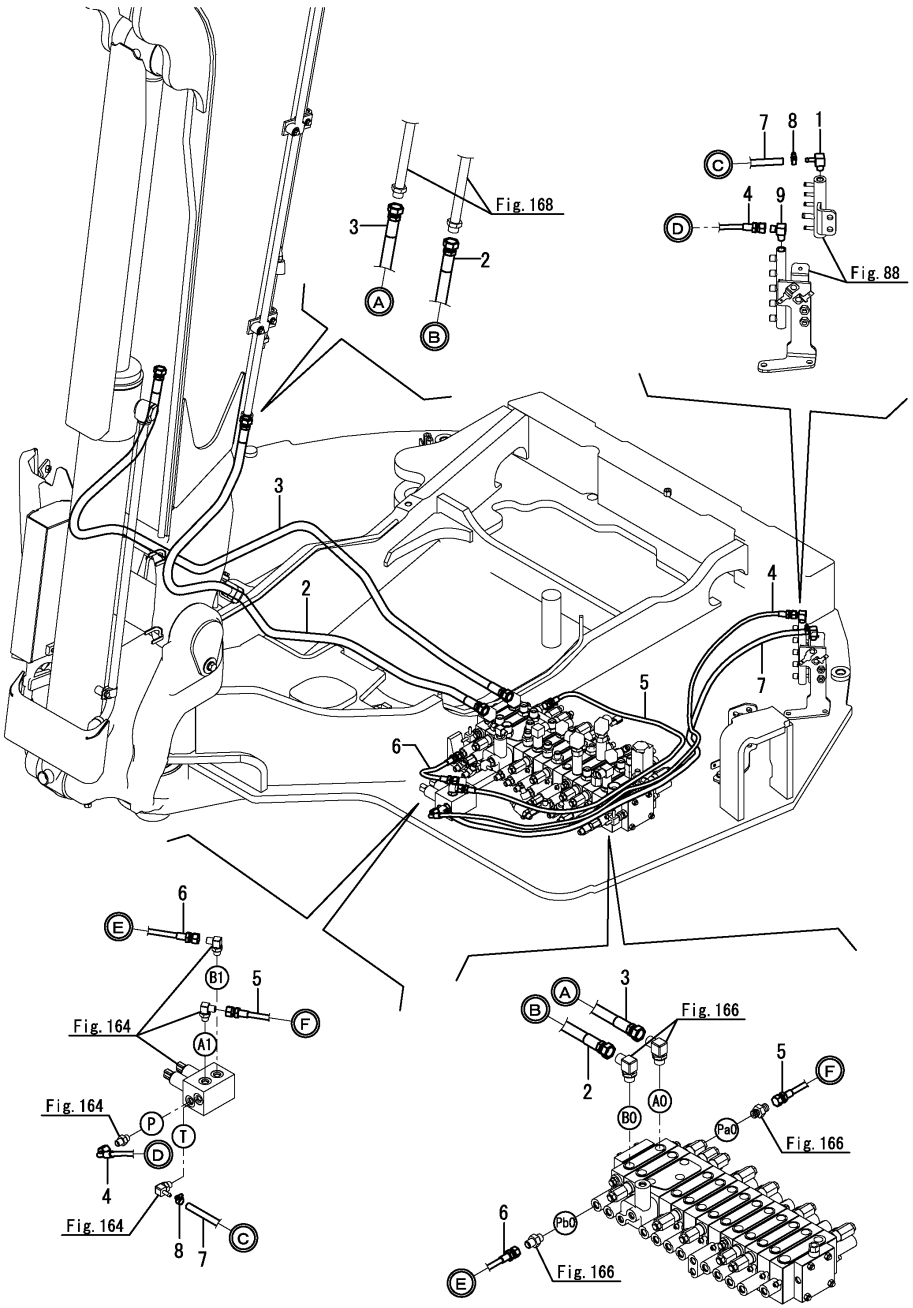

No.	Lev.	Parts No.	Description	Q'ty (A)	(B)	(C)	(D)	(E)	(F)	I	R
1	2	172186-76390	NIPPLE, ELBOW 1/4	1							
2	2	172B11-79940	HOSE, H108BB238K	1							
3	2	172B11-79950	HOSE, H108BB238K	1							
4	2	172B11-79960	HOSE, F403BC150	1							
5	2	172B11-79970	HOSE, F403BB140	1							
6	2	172B11-79980	HOSE, H603BB027	1							
7	2	172B11-79990	HOSE, G604YY147	1							
8	2	23000-013000	CLAMP, HOSE 13	2							
9	2	23393-020000	JOINT, 90 RGI 1/4	1							

N:Old $\frac{\text{Yes}}{\text{No}}$ New, Q:Old $\frac{\text{No}}{\text{Yes}}$ New, R:Old $\frac{\text{Yes}}{\text{Yes}}$ New, S:Old $\frac{\text{No}}{\text{No}}$ New, W:Add, Z:Discontinued, F:Interchangeable by set, K:Q'ty Change

Copyright (C) 2015 YANMAR CO., LTD. All RightsReserved.

Fig.168. P.T.O. 2 KIT(ARM END)(OPTIONAL)(7/7)

(A)=SV100-2A C(US)
(B)=
(C)=
(D)=
(E)=
(F)=

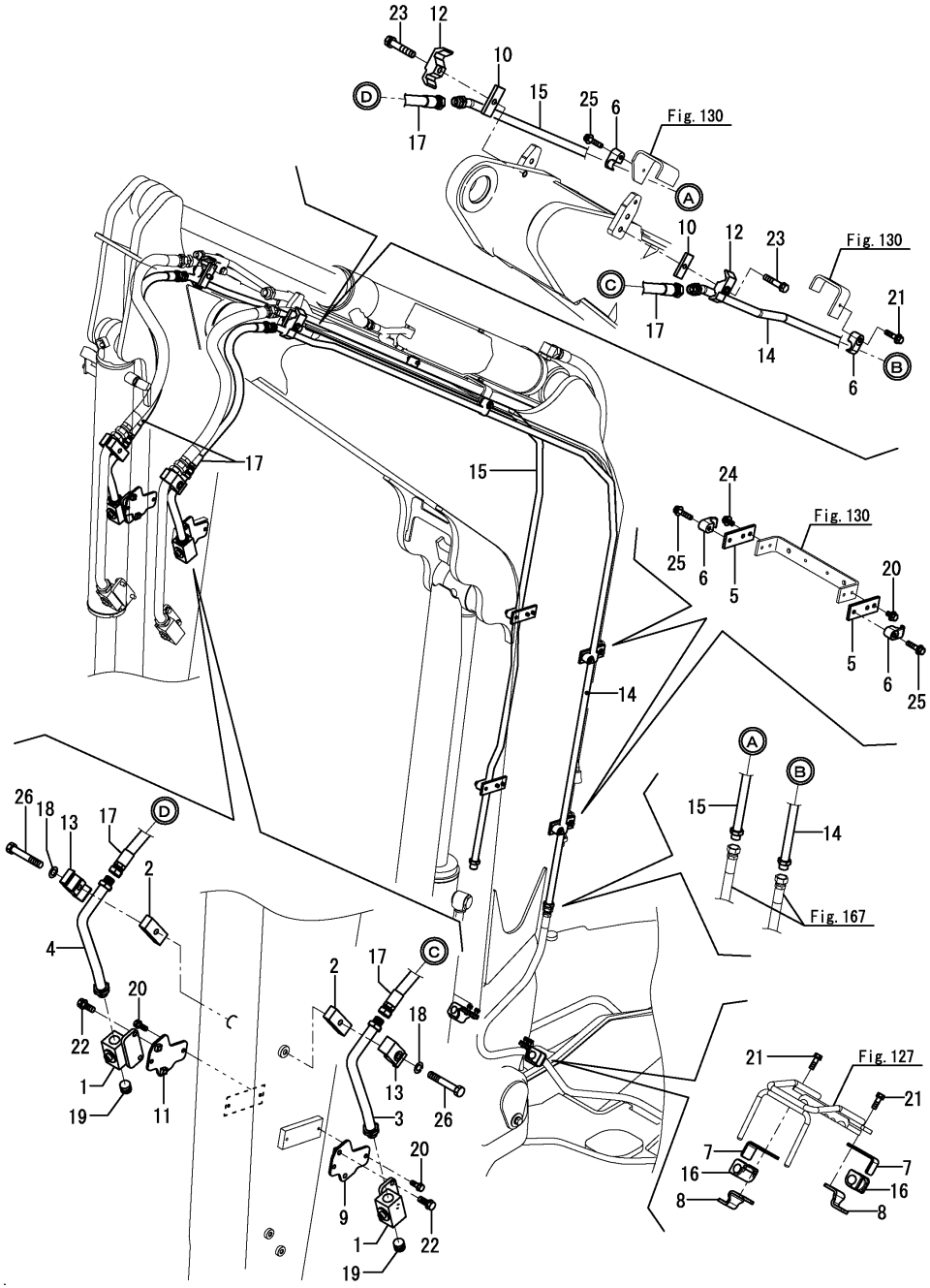

No.	Lev.	Parts No.	Description	Q'ty (A)	(B)	(C)	(D)	(E)	(F)	I	R
1	2	172183-74822-Y	VALVE, STOP	2							
2	2	172B12-76340	PLATE, BASE	2							
3	2	172B12-76350	TUBE ASSY, PTO2 L	1							
4	2	172B12-76380	TUBE ASSY, PTO2 R	1							
5	2	172B11-76520	PLATE, CLAMP PTO2	4							
6	2	172B11-76550	CLAMP,1/2	6							
7	2	172B11-76560	CLAMP,A PTO2	2							
8	2	172B11-76570	CLAMP,B PTO2	2							
9	2	172B11-76580	PLATE ASSY, VALVE L	1							
10	2	172175-76590-Y	PLATE, SPACER	2							
11	2	172B11-76600	PLATE ASSY, VALVE R	1							
12	2	172125-76900-2	CLUMP	2							
13	2	172125-76900-2	CLUMP	2							
14	2	172B11-77900	TUBE ASSY, PTO2 L	1							
15	2	172B11-77930	TUBE ASSY, PTO2 R	1							
16	2	172187-78100	RUBBER A, HOSE CLAMP	2							
17	2	172B12-79960	HOSE, H108BB100W	2							
18	2	22217-120000	WASHER, 12	2							
19	2	23871-040000	PLUG, R04	2							
20	2	26013-080202	BOLT, SPRING M8X 20	4							
21	2	26013-080252	BOLT, SPRING M8X 25	4							
22	2	26013-100252	BOLT, SPRING M10X 25	4							
23	2	26013-120602	BOLT, SPRING M12X 60	2							
24	2	26014-080162	BOLT, 8 X 16	8							
25	2	26014-080352	BOLT, 8 X 35	6							
26	2	26116-120752	BOLT, 12 X 75	2							

N:Old $\overset{\text{Yes}}{\underset{\text{No}}{\leftrightarrow}}$ New, Q:Old $\overset{\text{No}}{\underset{\text{Yes}}{\leftrightarrow}}$ New, R:Old $\overset{\text{Yes}}{\underset{\text{Yes}}{\leftrightarrow}}$ New, S:Old $\overset{\text{No}}{\underset{\text{No}}{\leftrightarrow}}$ New, W:Add, Z:Discontinued, F:Interchangeable by set, K:Q'ty Change

Copyright (C) 2015 YANMAR CO., LTD. All RightsReserved.

Fig.169. ADDITIONAL WEIGHT KIT(OPTIONAL)

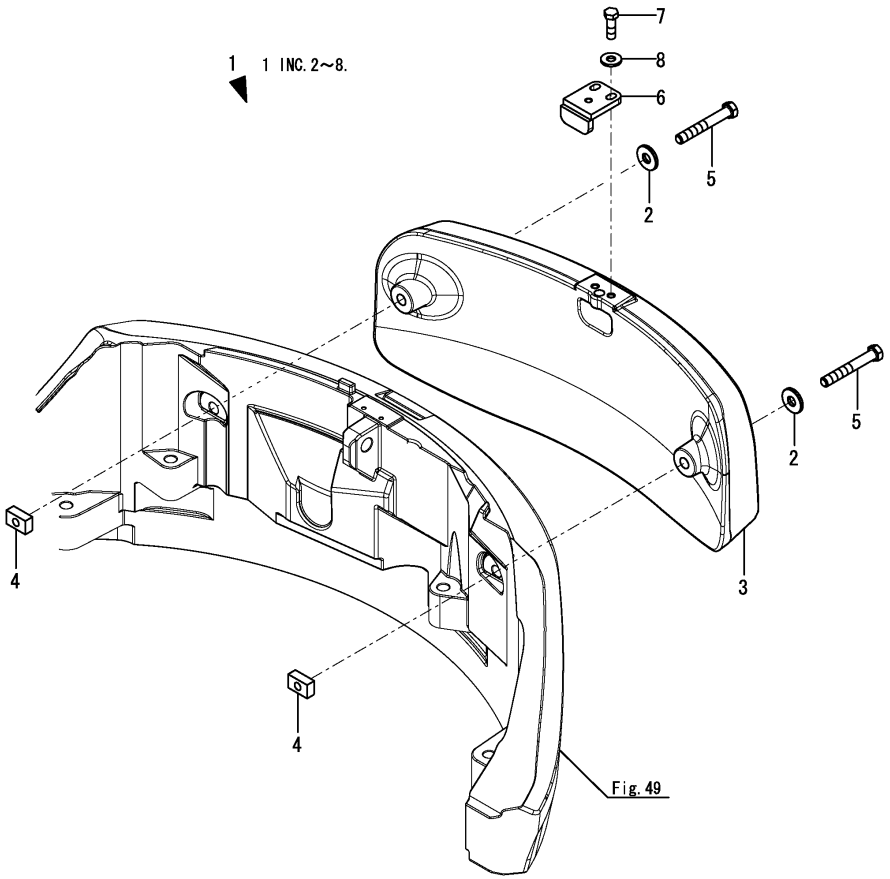

(A)=SV100-2A C(US) (D)=
(B)= (E)=
(C)= (F)=

No.	Lev.	Parts No.	Description	Q'ty (A)	(B)	(C)	(D)	(E)	(F)	I	R
1	1	172A89-08900	WEIGHT SET	1							
2	2	172187-53321	WASHER 24.5X65X8	2							
3	2	172A89-53320	WEIGHT,ADD	1							
4	2	172A46-53360	NUT M24	2							
5	2	172A48-53371	BOLT M24X170	2							
6	2	172A48-53380	BRACKET ASSY,WEIGHT	1							
7	2	26116-160502	BOLT, 16 X 50	2							
8	2	933147-08501	WASHER, WHEEL SHAFT	2							

N:Old $\overset{\text{Yes}}{\underset{\text{No}}{\leftrightarrow}}$ New, Q:Old $\overset{\text{No}}{\underset{\text{Yes}}{\leftrightarrow}}$ New, R:Old $\overset{\text{Yes}}{\underset{\text{Yes}}{\leftrightarrow}}$ New, S:Old $\overset{\text{No}}{\underset{\text{No}}{\leftrightarrow}}$ New, W:Add, Z:Discontinued, F:Interchangeable by set, K:Q'ty Change

Copyright (C) 2015 YANMAR CO., LTD. All RightsReserved.

Fig.170. SIDE MIRROR(LEFT)(OPTIONAL)

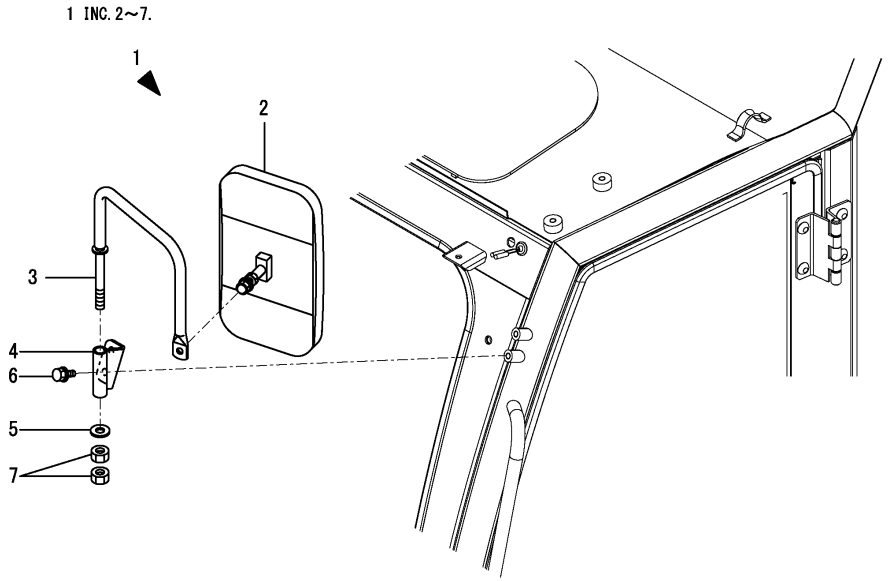

(A)=SV100-2A C(US)
(B)=
(C)=
(D)=
(E)=
(F)=

No.	Lev.	Parts No.	Description	Q'ty (A)	(B)	(C)	(D)	(E)	(F)	I	R
1	1	172B12-06700	MIRROR KIT, SIDE L	1							
2	2	1W3855-50160	MIRROR ASSY, BACK	1							
3	2	172B12-68500	STAY ASSY, MIRROR L	1							
4	2	172B12-68550	BRACKET ASSY, MIRROR	1							
5	2	22137-140000	WASHER, 14	1							
6	2	26014-100202	BOLT, M10X 20	2							
7	2	26736-140002	NUT, M14	2							

N:Old $\frac{\text{Yes}}{\text{No}}$ New, Q:Old $\frac{\text{No}}{\text{Yes}}$ New, R:Old $\frac{\text{Yes}}{\text{Yes}}$ New, S:Old $\frac{\text{No}}{\text{No}}$ New, W:Add, Z:Discontinued, F:Interchangeable by set, K:Q'ty Change

Copyright (C) 2015 YANMAR CO., LTD. All RightsReserved.

Parts No. Index

Parts No.	Fig. No.	Ref. No.
106990-44660	13	29
	14	21
114110-07761	1	17
	182	17
119140-12680	7	6
119160-12530	7	2
119160-12540	7	4
119160-12560	7	5
121250-49121	10	3
121256-44600-3	12	8
121450-44531	12	3
121470-44581	12	5
124450-44550	12	7
124450-44560	12	4
124465-44950	32	25
124766-59050	6	14
	10	22
	13	30
128300-77920	73	24
129242-55740	14	31
129418-12530	7	3
129466-96240	32	27
129612-52100	14	22
129927-44900	118	10
129927-77900	20	29
129927-77910	20	30
129942-07761	153	47
129A00-55720	14	29
129A00-55730	14	30
129A00-55740	14	32
129A00-55750	14	26
129A00-55760	14	27
129A00-55770	14	33
129E00-55710	14	25
129E22-55700	14	24
171064-44510	12	1
172020-10390	39	2
172020-10401	39	3
172020-10620	152	5
172110-76170	137	3
172112-16201	17	2
172112-16650	9	12
172112-74971	118	5
172112-75770	118	7
172112-75780	118	8
172112-77361	89	45
	90	38
	122	18
	123	25
172112-77580	144	2

Parts No.	Fig. No.	Ref. No.
172113-74190	105	4
	107	7
	176	4
	178	5
172116-74150	101	25
	102	16
	103	3
		9
	104	3
	105	15
	106	19
	107	3
		37
	108	15
	172	25
	173	16
	174	3
		9
	175	3
	176	15
	177	19
	178	17
		37
	179	18
172122-17190	33	42
	63	1
		35
	87	1
172122-37844	39	7
172122-55061	14	23
172122-79890	7	10
	128	16
172123-76121	110	24
	112	1
	113	10
	114	34
	115	21
	116	20
	119	6
		7
	122	4
	124	4
		5
	125	1
	128	2
	129	5
	157	2
	159	1
	164	2
	166	1

Parts No.	Fig. No.	Ref. No.
172124-17640	32	9
172124-46200	44	6
	150	2
172124-65480	67	18
172124-70030	91	2
172125-03951	2	13
	67	11 E
172125-76900-2	161	7
	168	12
		13
172126-11510	18	1
	20	1
	28	6
	30	1
	32	2
	33	1
	137	16
	140	1
172126-16540	15	13
	33	3
172137-13400	13	2
172137-14282	9	11
172137-16560	15	14
	26	2
	32	3
		4
		5
	122	22
	138	1
	143	1
172137-46042	9	13
172137-46210	22	18
172137-69850	27	14
	29	30
	62	6
	84	7 -1
172137-75570	161	1
172137-76100	109	21
172137-76110	122	2
172137-76580	137	7
172141-17150	27	2
172141-17211	26	5
172141-41370	44	3
172141-50890	63	3
172141-72250	94	2
172141-76181	110	25
	111	28
		30
	112	2
	114	35

Parts No.	Fig. No.	Ref. No.
172141-76181	119	14
		16
	124	8
	125	6
	157	3
	164	3
172141-76900	91	37
	119	22
	122	16
	123	23
	128	6
	159	2
	166	2
172142-62301	11	28
	54	19
172142-72260	94	3
172142-72951	94	19
172142-76240	134	10
172142-76940-Y	130	13
	135	6
		7
	136	6
		7
172142-76950-Y	130	15
172146-61360	63	30
172146-78150	11	29
172147-76271	123	22
172151-71630	94	12
172151-74060	101	9
	102	3
	103	5
	104	5
		14
	105	2
		17
	106	3
		25
	107	5
		20
	108	2
		18
	172	9
	173	3
	174	5
	175	5
		14
	176	2
		17
	177	3
		25

Parts No. Index

Parts No.	Fig. No.	Ref. No.
172151-74060	178	3
		20
	179	2
		21
172151-74320	101	12
	102	7
	103	26
	104	8
		18
	105	7
		20
	106	6
		28
	107	9
		29
	108	5
		22
	172	12
	173	7
	174	26
	175	8
		18
	176	7
		20
	177	6
		28
	178	7
		29
	179	5
		32
172151-76050	88	4
	109	20
172151-76161	123	14
	125	4
172151-76200	123	18
172155-11120	122	1
172155-45790	89	1
	146	1
	147	2
	148	2
	152	1
172156-65690	66	11
172156-76110	23	4
	122	3
172157-58830	109	3
172157-76300	98	5
172162-14200	13	24
172162-17400	26	4
172162-57660	51	5
172162-61500	57	1

Parts No.	Fig. No.	Ref. No.
172162-61770	89	2
172162-62540	29	27
172162-72040	91	3
172162-72450	91	15
172162-72620	89	16
	90	31
172162-72680	89	17
	90	32
172162-72690	89	18
	90	33
172162-72700	89	19
172162-72930	91	28
172162-72950	90	34
	91	29
172162-73700	118	2
172162-76181	124	10
172162-76320	122	15
172162-81060	152	6
172162-81430	146	5
172162-81680	145	3
172162-82280	147	7
	148	13
172162-82350	147	8
	148	14
172162-82360	150	4
172162-83580	146	14
172162-83600	146	15
172162-83610	146	16
172162-94270	152	8
172162-94280-3	92	37
	152	9
172164-16370	17	3
172164-37120	38	3
172164-66640	68	8
172164-76330	124	20
172164-76700	124	21
172164-81670	147	9
	148	3
172165-13220	9	10
172165-47550	44	12
172165-47980	44	13
172165-47990	44	14
172165-76380	90	36
	91	35
	134	11
172165-76590	119	7 -1
172165-82520	147	13
	148	7
	149	11
172165-82530	147	14

Parts No.	Fig. No.	Ref. No.
172165-82530	148	8
	149	12
172168-54760	149	7
172168-76162	128	3
	129	6
172168-76170	127	1
172168-76370	127	4
172173-76102	109	23
	110	22
	113	8
	129	3
172175-72480	94	4
172175-74220	101	11
	102	6
	103	25
	104	16
	105	5
		19
	106	5
		27
	107	8
		24
	108	4
		20
	172	11
	173	6
	174	25
	175	16
	176	5
		19
	177	5
		27
	178	6
		24
	179	4
		25
172175-76590-Y	161	6
	168	10
172175-81700	92	32
	147	10
	148	4
	149	1
	152	2
172175-81710	92	33
	147	11
	148	5
	149	2
	152	3
172176-67150	54	24
172176-68210	61	7

Parts No.	Fig. No.	Ref. No.
172176-68210	151	4
		5
172176-76210	123	21
172176-76582-Y	135	4
	136	4
172176-81700	89	46
172176-81710	89	47
172183-03280	3	14
	183	14
172183-74822-Y	168	1
172183-76200	115	22
	124	14
172183-81160	127	22
	151	3
		6
172186-14150	13	22
172186-76390	160	1
	167	1
172186-76430	112	4
	113	12
	157	5
	164	5
172187-03941	1	16
	146	5 A
	182	16
172187-14510	13	28
172187-16110	17	1
172187-16600	15	15
172187-18410	32	23
172187-45651	45	1
172187-45720-2	45	2
172187-45760	45	3
172187-45870	41	3
172187-45880	41	4
172187-53321	49	2
	169	2
172187-61421	54	1
	55	20
172187-61500-3	57	2
172187-63160	61	4
172187-64900	22	19
172187-65210	67	13
172187-65270	67	15
172187-66140	63	27
172187-71210	86	4
172187-72910-N	89	41
172187-74410	105	9
	107	11
	176	9
	178	9

Parts No. Index

Parts No.	Fig. No.	Ref. No.
172187-74530	101	5
		27
	104	11
	172	5
		27
	175	11
172187-74540	103	34
	174	34
172187-74550	101	29
	106	36
	172	29
	177	36
172187-74630	103	40
	174	40
172187-74690	103	21
	174	21
172187-75340-2	118	13
172187-75500	118	17
172187-76131	122	5
172187-76141	122	8
172187-76170	123	16
172187-76180	127	3
172187-76191	119	18
172187-76200	123	19
172187-76520	130	12
172187-76690-Y	135	5
	136	5
172187-76940	130	14
172187-78100	127	15
	133	3
	161	10
	168	16
172187-78211	129	15
172187-79300	135	12
172187-81710	147	6
	148	12
172187-81801	89	48
172187-81840	146	7
172187-81970	92	34
	146	10
172187-82320	145	5
172187-82370	92	35
172187-82400	145	7
172187-82410	145	8
172187-82420	145	9
172187-82430	146	13
172187-83040	149	10
172187-94300	152	10
172312-74230	179	26
172312-74770	103	22

Parts No.	Fig. No.	Ref. No.
172312-74770	174	22
172422-74110	101	2
	172	2
172422-74330	104	9
	175	9
172422-76100	119	1
172422-76140	111	25
	113	11
	119	12
	124	6
172422-78760	134	13
172423-76100	123	1
172423-76120	97	3
	119	37
	123	4
172423-76140	123	5
172425-74200	107	22
	178	22
	179	23
172425-74210	107	23
	178	23
	179	24
172437-03252	3	13
	183	13
172437-03302	3	15
	72	4 A
	183	15
172437-03312	3	16
	77	15 A
	183	16
172437-03322	2	8
	118	28 A
172437-03343	3	17
	77	15 B
	183	17
172437-03351	78	29 A
172437-03352	1	6
	58	3 B
	59	5 A
	182	6
172437-03361	2	11
	11	20 B
172437-03372	3	19
	77	15 C
	183	19
172437-03381	1	7
	67	11 A
	182	7
172437-03391	1	8
	33	27 A

Parts No.	Fig. No.	Ref. No.
172437-03391	182	8
172437-03402	1	10
	54	11 A
	67	11 C
	182	10
172437-03432	3	22
	77	15 D
	183	21
172437-03441	3	23
	72	4 B
	183	22
172437-03451	3	24
	72	4 C
	183	23
172437-03471	3	25
	72	4 D
	183	24
172437-03501	1	14
	182	14
172437-03511	1	15
	182	15
172437-03551	3	26
	183	25
172437-03601	3	5
	55	27 A
	183	5
172437-03610	2	14
172437-03620	2	15
172437-74711	109	5
172437-74720	109	6
172437-74732	109	7
172441-44320	46	1
172441-74030	116	3
		12
	158	2
	165	2
172441-74040	116	4
		13
	158	3
	165	3
172444-13210	10	1
172444-13220	10	2
172444-14270	13	27
172444-17620	63	8
172444-17660	130	1
	147	1
	148	1
	151	1
		2
172444-65190	67	12

Parts No.	Fig. No.	Ref. No.
172445-68650	20	28
172445-81990	146	11
172446-14250	14	2
172447-13550	33	2
172447-14160	13	12
172448-54120	147	4
	148	11
	149	6
172455-46890	44	11
172455-53331	49	3
172455-61580	29	22
172455-61720	150	3
172455-67350	74	2
172455-67770	77	9
172455-67940	76	2
172455-69270	82	13
172455-69550	79	29
172455-69560	73	23
	79	30
172455-69710	82	14
172455-74010	101	21
	106	15
	172	21
	177	15
172455-74020	101	22
	106	16
	172	22
	177	16
172455-74030	101	23
	106	17
	172	23
	177	17
172455-74040	101	24
	106	18
	172	24
	177	18
172455-74320	101	20
	106	14
	172	20
	177	14
172455-74390	101	13
	102	8
	103	27
	104	19
	105	8
		21
	106	7
		29
	107	10
		30

Parts No. Index

Parts No.	Fig. No.	Ref. No.
172455-74390	108	6
	172	13
	173	8
	174	27
	175	19
	176	8
		21
	177	7
		29
	178	8
		30
	179	6
172455-74410	101	14
	102	9
	103	28
	104	20
	105	10
		22
	106	8
		30
	107	12
		31
	108	7
		23
	172	14
	173	9
	174	28
	175	20
	176	10
		22
	177	8
		30
	178	10
		31
	179	7
		33
172455-74420	101	15
	102	10
	103	29
	105	23
	106	9
		31
	107	13
		32
	108	8
	172	15
	173	10
	174	29
	176	23
	177	9

Parts No.	Fig. No.	Ref. No.
172455-74420	177	31
	178	11
		32
	179	8
172455-74440	101	16
	102	11
	103	30
	105	24
	106	10
		32
	107	14
		33
	108	9
	172	16
	173	11
	174	30
	176	24
	177	10
		32
	178	12
		33
	179	9
172455-74450	101	17
	102	12
	103	31
	105	25
	106	11
		33
	107	15
		34
	108	10
	172	17
	173	12
	174	31
	176	25
	177	11
		33
	178	13
		34
	179	10
172455-74460	101	18
	102	13
	103	32
	104	21
	105	11
		26
	106	12
		34
	107	16
		35

Parts No.	Fig. No.	Ref. No.
172455-74460	108	11
		24
	172	18
	173	13
	174	32
	175	21
	176	11
		26
	177	12
		34
	178	14
		35
	179	11
		34
172455-74480	108	25
	179	37
172455-74530	103	33
	174	33
172455-74550	103	36
	174	36
172455-74560	103	37
	174	37
172455-74570	103	38
	174	38
172455-74580	103	39
	174	39
172455-74590	103	12
	174	12
172455-74600	103	13
	174	13
172455-74620	103	14
	174	14
172455-74630	103	15
	174	15
172455-74640	103	16
	174	16
172455-74650	103	17
	174	17
172455-74660	103	18
	174	18
172455-74670	103	19
	174	19
172455-74680	103	20
	174	20
172455-74720	103	23
	174	23
172455-74990	101	26
	106	20
	172	26
	177	20

Parts No.	Fig. No.	Ref. No.
172455-75290	118	19
172455-75300	118	20
172455-76200	123	20
172455-76220	116	21
172455-77140	87	61
172455-77150	114	29
172455-82360	149	8
172455-82380-Y	149	3
172455-82391-Y	149	4
172455-83300	147	15
	148	9
172455-83350	149	13
172455-83360	149	14
172456-13470	20	15
172456-53700	33	43
	49	4
172458-03240	4	4
172458-14203	13	13
172458-17700	29	2
172458-18850	63	9
172458-50480-2	47	2
172458-61500	10	12
172458-61510	10	13
172458-62430	27	11
	29	28
	62	1
	84	6 -1
172458-63730	74	1
	79	2
	82	2
172458-63950	77	2
	78	2
	82	3
172458-63960	77	3
	82	4
172458-64140	29	23
172458-65050	67	2
172458-65060	67	3
172460-16700	14	20
172460-73320	35	2
	48	2
	70	8
		9
	95	81
172462-03320	2	9
172463-03290	2	7
172463-69150	78	4
	79	6
172463-69240	79	9
172463-69270	73	22

Parts No. Index

Parts No.	Fig. No.	Ref. No.
172463-74530	116	5
		14
	158	4
	165	4
172463-74540	116	6
		15
	158	5
	165	5
172463-74551	116	7
		16
	158	6
	165	6
172463-74561	116	8
		17
	158	7
	165	7
172463-74570	116	9
		18
	158	8
	165	8
172467-76120	134	7
172469-03261	153	9
172469-03320	153	15
172469-03360	153	17
172469-03480	153	27
172469-03540	153	33
172472-03141	1	4
	58	3 A
	182	4
172472-03230	4	3
172472-03241	4	5
	77	15 E
172472-03261	4	6
	147	8 A
172472-03290	22	2
172472-03300	22	3
172472-03330	4	7
	147	8 B
172478-17201	23	2
	24	1
172478-74170	102	4
	173	4
172478-74180	101	10
	102	5
	103	6
	104	15
	105	3
		18
	106	4
		26

Parts No.	Fig. No.	Ref. No.
172478-74180	107	6
		21
	108	3
		19
	172	10
	173	5
	174	6
	175	15
	176	3
		18
	177	4
		26
	178	4
		21
	179	3
		22
172478-74360	101	4
	108	28
	172	4
	179	14
172478-74370	108	29
	179	15
172479-73590	95	22
172479-73650	95	29
172479-73750	95	49
172479-73760	95	50
172479-73930	95	41
172487-68450	11	16
172488-74200	103	7
	174	7
172488-74210	103	10
	174	10
172488-74220	103	11
	174	11
172491-76140	123	6
172491-76330	111	32
	115	24
172499-03280	3	2
	183	2
172499-13750	11	5
172499-13760	11	6
172499-29100-1	35	1
172499-37101-1	36	2
172499-37111	36	3
172499-37131	36	5
172499-37142	36	6
172499-37152	36	7
172499-37161	36	8
172499-37172	36	9
172499-37180	36	10

Parts No.	Fig. No.	Ref. No.
172499-37500-1	38	1
172499-37700-1	36	13
172499-37750-1	39	1
172499-37760	39	4
172499-37790	39	5
172499-37800	39	6
172499-38100-1	40	1
172499-38110-1	40	17
172499-38120	40	2
		18
172499-38130-1	40	14
		35
172499-38140-1	40	30
		42
172499-38160	40	15
		31
		36
		43
172499-38170	40	16
		32
		37
		44
172499-38180	40	3
		19
172499-38190	40	4
		20
172499-38200	40	5
		21
		38
		45
172499-38210	40	6
		22
		39
		46
172499-38220	40	7
		23
172499-38230	40	8
		24
172499-38240	40	9
		25
		40
		47
172499-38250	40	10
		26
172499-38260	40	11
		27
172499-38270	40	12
		28
172499-38280	40	13
		29

Parts No.	Fig. No.	Ref. No.
172499-38300-1	40	34
172499-38310-1	40	41
172499-38600	40	33
172499-50800-1	48	1
172499-71200	86	3
172499-72130	89	7
172499-72140	89	8
	90	2
172499-72180	89	10
172499-72190	89	11
172499-72200	89	12
172499-72220	89	13
172499-72230	89	14
172499-72260	89	15
172499-72280	89	37
172499-72860	89	20
	91	25
172499-72870	89	21
	91	26
172499-72880	89	22
	91	27
172499-72900	89	23
172499-72910	89	31
172499-72930	89	35
172499-73490	95	11
172499-73660	95	31
172499-73740	95	46
		48
172499-73780	95	73
172499-73850	95	74
		75
172499-73950	95	66
172499-76200	129	9
172499-76300	122	12
172499-76311	122	14
172499-76500-Y	135	3
172499-78210	131	1
172499-78530	129	18
172499-79120	137	24
172499-81751	146	6
172499-81800	147	12
	148	6
172499-81850	146	8
172499-81860	146	9
172499-82400-Y	149	5
172511-17351	23	3
172519-63240	20	27
	46	4
		5
	61	5

Parts No. Index

Parts No.	Fig. No.	Ref. No.
172519-63240	61	6
	63	5
172524-76110	123	2
172524-76210	134	8
172538-17100	27	1
172538-19700	63	10
172633-76200	122	11
172638-73650	103	8
	174	8
172644-76161	129	7
172644-76180	122	10
172645-76560	89	43
172649-16560	16	2
	20	4
172730-31630	38	2
172730-75141	111	24
	128	1
	129	2
172734-65270	67	16
172828-76330	109	25
172958-03160	4	2
172958-07330	5	1
172958-17111	22	1
172958-17121	150	1
172958-17140	22	7
172958-17150	22	8
172958-17160	22	9
172958-17170	22	10
172958-17180	22	11
172958-17190	22	12
172958-17200	22	13
172958-17210	22	14
172958-17220	22	15
172958-17230	22	14 -1
172958-17410	22	1 -1
172958-72950	94	22
172958-72960	94	23
172958-72983-N	94	24
172958-78120	137	18
172960-83210	150	15
172964-12140	42	1
172978-72800-N	94	1
172978-72810-N	94	5
172978-72860	94	8
172978-72880	94	11
172978-72890	94	7
172978-72920	94	14
172978-76100	137	1
172978-76480-Y	137	4
172978-76500-Y	137	5

Parts No.	Fig. No.	Ref. No.
172978-83101-Y	150	5
172978-83111-Y	150	6
172978-83120	150	7
172978-83130	150	8
172978-83140	150	9
		10
172978-83150	150	11
172978-83161	150	12
172978-83170-Y	150	13
172978-83191	150	14
172978-83221-Y	150	16
172978-83270-Y	150	17
172978-83292	150	18
172978-83300-Y	150	19
172978-83320-Y	150	20
172A21-13100	9	1
172A21-76120	125	2
172A25-68500	83	1
	85	2
172A25-74430	87	59
172A36-03411	1	11
		12
	54	7 B
	67	11 D
	182	11
		12
172A36-74690	109	2
172A36-74700	109	4
172A36-74750	109	8
172A36-74780	109	9
172A37-03150	153	2
172A37-03160	153	3
172A37-03180	153	4
172A37-03200	153	5
172A37-03231	153	6
172A37-03241	153	7
172A37-03250	153	8
172A37-03271	153	10
172A37-03280	153	11
172A37-03290	153	12
172A37-03300	153	13
172A37-03310	153	14
172A37-03330	153	16
172A37-03360	153	18
172A37-03370	153	19
172A37-03400	153	21
172A37-03410	153	22
172A37-03420	153	23
172A37-03430	153	24
172A37-03500	153	28

Parts No.	Fig. No.	Ref. No.
172A37-03520	153	30
172A37-03530	153	31
172A37-03680	153	37
172A37-03710	153	38
172A37-03720	153	39
172A37-03760	153	40
172A38-03201	2	4
	12	6 A
172A38-03211	2	5
	11	23 A
172A46-46500	46	2
172A46-46530	46	3
172A46-53360	169	4
172A46-74710	111	8
	113	4
172A46-74720	111	9
172A46-74730	111	10
172A47-17550	32	6
172A47-74710	110	4
	115	3
172A47-74720	110	5
	115	4
172A47-74730	110	6
	114	9
	115	5
172A47-74740	110	7
	115	6
172A47-74750	110	8
	115	7
172A47-74760	110	9
	114	20
	115	8
172A47-74770	110	10
	114	21
	115	9
172A47-74780	110	11
	115	10
172A47-74790	110	12
	115	11
172A47-74800	110	13
	115	12
172A47-74810	110	14
	114	24
	115	13
172A47-74820	110	15
	115	14
172A47-74840	110	16
	114	25
	115	15
172A47-74850	110	17

Parts No.	Fig. No.	Ref. No.
172A47-74850	114	26
	115	16
172A47-74860	110	18
	115	17
172A47-74870	110	19
	115	18
172A47-74880	110	20
	114	27
	115	19
172A47-74890	110	21
	114	28
	115	20
172A47-76171	124	7
172A47-76180	124	12
172A47-76230	114	37
	124	15
172A47-76290	124	17
172A47-76320	115	23
	124	19
172A47-77820	143	4
172A48-53371	169	5
172A48-53380	169	6
172A50-78860	122	27
172A52-76130	122	6
172A52-81352	146	4
172A64-17250	20	20
172A64-64940	54	7
172A65-03230	1	5
172A65-16550	15	7
172A65-64840	55	8
172A65-73800	99	1
172A65-73810	99	2
172A65-73840	99	3
172A65-73850	99	4
172A65-73860	99	5
172A65-73870	99	11
172A65-73880	99	10
172A65-76700	128	4
172A65-76790	119	9
		11
172A69-03130	2	2
172A69-03220	3	10
	183	10
172A69-03270	2	6
172A69-03350	2	10
	11	20 A
172A69-03430	153	25
172A69-03450	153	26
172A69-12100	8	1
172A69-12120	8	7

Parts No. Index

Parts No.	Fig. No.	Ref. No.
172A69-13230	10	5
172A69-13660	11	10
172A69-13690	54	16
172A69-13760	10	16
172A69-13770	10	17
172A69-14110	13	3
172A69-14130	13	9
172A69-14170	13	23
172A69-14211	13	14
172A69-14230	13	26
172A69-14240	13	15
172A69-14310	13	35
172A69-14350	13	37
		44
172A69-14370	13	38
172A69-14410	13	40
172A69-14430	13	42
172A69-14450	13	43
172A69-14550	13	18 -1
172A69-16480	18	2
172A69-16700	15	17
	20	17
172A69-17211	27	4
172A69-17221	27	5
172A69-17231	27	6
172A69-17241	27	7
172A69-17251	27	8
172A69-17260	20	21
172A69-18150	32	14
172A69-18160	32	15
172A69-18750	29	10
172A69-18900	30	9
172A69-45211	41	1
172A69-45251	41	2
172A69-45350	43	1
172A69-45800	45	4
172A69-45851	42	2
172A69-46101	44	2
172A69-46210	44	7
172A69-46220	44	8
172A69-46251	44	9
172A69-46270	44	10
172A69-50101	47	1
172A69-50670	47	3
172A69-54700	50	3
172A69-54710	50	4
172A69-57600	51	1
172A69-57620	51	3
172A69-57650	51	4
172A69-57660	51	6

Parts No.	Fig. No.	Ref. No.
172A69-61010	55	1
172A69-61020	55	2
172A69-61480	56	1
172A69-61500	56	2
172A69-61530	56	4
172A69-61570	56	7
172A69-61580	56	8
172A69-61590	57	3
172A69-61780	54	10
172A69-61801	54	12
172A69-62050	52	6
172A69-62150	60	1
172A69-62160	60	2
172A69-62280	66	3
172A69-62310	66	8
172A69-62420	66	9
172A69-62430	66	22
172A69-62440	66	23
172A69-62450	66	24
172A69-62470	66	25
172A69-62510	66	10
172A69-62650	66	29
172A69-64100	64	1
172A69-64120	65	2
172A69-64160	71	1
172A69-64170	71	2
172A69-64710	63	18
172A69-64740	64	2
172A69-64760	55	27
172A69-64800	65	3
172A69-65180	67	8
172A69-65190	67	10
172A69-65530	66	30
172A69-65640	68	4
172A69-65670	68	7
172A69-65850	63	26
	69	3
172A69-65860	69	4
172A69-65872	69	9
172A69-65900-Y	69	10
172A69-65920	69	12
172A69-65971	70	3
172A69-68850	83	2
172A69-70100	96	3
172A69-70110	96	5
172A69-70120	96	7
172A69-70130	96	23
172A69-70160	96	26
172A69-70170	96	41
172A69-70180	96	14

Parts No.	Fig. No.	Ref. No.
172A69-70190	96	19
172A69-71110	106	23
	177	23
172A69-71120	106	24
	177	24
172A69-71130	106	1
	177	1
172A69-71140	106	2
	177	2
172A69-71170	107	1
	178	1
172A69-71180	107	2
172A69-71190	107	4
	178	2
172A69-71200	108	1
	179	1
172A69-71211	108	13
172A69-71221	108	14
	179	17
172A69-71230	108	16
172A69-71240	108	17
	179	20
172A69-71250	108	27
	179	13
172A69-71260	101	1
	172	1
172A69-71300	114	2
172A69-71310	114	3
172A69-71320	114	4
172A69-71340	114	5
172A69-71350	114	6
172A69-71360	114	7
172A69-71370	114	8
172A69-71380	114	11
172A69-71390	114	12
172A69-71400	114	13
172A69-71550	88	1
172A69-71560	88	2
172A69-71750	109	1
172A69-71800	96	9
172A69-71810	96	10
172A69-71820	96	11
172A69-71830	96	6
		8
172A69-71840	96	4
172A69-71850	96	24
172A69-71860	96	31
172A69-71870	96	32
172A69-71880	96	42
172A69-72070-Y	133	1

Parts No.	Fig. No.	Ref. No.
172A69-72100-N	89	3
172A69-72110-N	89	4
172A69-72130	89	6
172A69-72140-N	89	9
172A69-72260	91	4
172A69-72270	91	11
172A69-72280	90	3
172A69-72290	90	11
172A69-72300-N	90	1
172A69-72310-N	90	14
172A69-72330	90	17
172A69-72350	90	20
172A69-72370	90	21
172A69-72380	90	22
172A69-72390	90	23
172A69-72400	90	24
172A69-72410	90	25
172A69-72430	90	26
172A69-72440	90	27
172A69-72450	90	28
172A69-72460	90	29
172A69-72470	90	30
172A69-72480	90	16
172A69-72490	90	19
172A69-72500-N	91	1
172A69-72510-N	91	14
172A69-72530	91	17
172A69-72550	91	20
172A69-72560	91	21
172A69-72570	91	22
172A69-72620	91	23
172A69-72650	91	19
172A69-72660	91	33
172A69-72670-N	91	24
172A69-72680	133	2
172A69-72900	93	24
	180	29
172A69-72950-N	89	42
172A69-73031	96	1
172A69-73040	96	2
172A69-73070	96	13
172A69-73080	96	18
172A69-73300	95	1
172A69-73400	95	2
172A69-73410	95	3
172A69-73420	95	4
172A69-73430	95	5
172A69-73440	95	6
172A69-73450	95	7
172A69-73460	95	8

Parts No. Index

Parts No.	Fig. No.	Ref. No.
172A69-73470	95	9
172A69-73480	95	10
172A69-73490	95	12
172A69-73500	95	13
172A69-73510	95	14
172A69-73520	95	15
172A69-73530	95	16
172A69-73540	95	17
172A69-73550	95	18
172A69-73560	95	19
172A69-73570	95	20
172A69-73580	95	21
172A69-73590	95	23
172A69-73600	95	24
172A69-73610	95	25
172A69-73620	95	26
172A69-73630	95	27
172A69-73640	95	28
172A69-73650	95	30
172A69-73660	95	32
172A69-73670	95	33
172A69-73680	95	34
172A69-73690	95	35
172A69-73700	95	36
172A69-73710	95	37
172A69-73720	95	38
172A69-73730	95	39
172A69-73740	95	40
172A69-73750	95	47
172A69-73760	95	51
172A69-73770	95	52
172A69-73780	95	53
172A69-73790	95	54
172A69-73800	95	55
172A69-73810	95	56
172A69-73820	95	57
172A69-73830	95	58
172A69-73840	95	59
172A69-73850	95	60
172A69-73860	95	61
172A69-73870	95	62
172A69-73880	95	63
172A69-73890	95	64
172A69-73900	95	65
172A69-73910	95	85
172A69-73950	96	22
172A69-73960	96	33
172A69-73970	96	35
172A69-73980	96	40
172A69-74050	134	1

Parts No.	Fig. No.	Ref. No.
172A69-74070	134	6
172A69-74110	101	3
	172	3
172A69-74120	104	1
	175	1
172A69-74130	104	2
	175	2
172A69-74140	104	4
	175	4
172A69-74150	104	6
	175	6
172A69-74160	104	7
	175	7
172A69-74170	101	7
	172	7
172A69-74180	101	8
	172	8
172A69-74191	102	1
	173	1
172A69-74200	102	15
	103	2
	105	14
	107	36
	173	15
	174	2
	176	14
	178	36
172A69-74220	103	1
	174	1
172A69-74230	103	4
	174	4
172A69-74240	104	13
	175	13
172A69-74250	104	17
	105	6
	108	21
	175	17
	176	6
	179	29
172A69-74260	105	1
	176	1
172A69-74270	105	13
	176	13
172A69-74280	105	16
	176	16
172A69-74291	106	21
172A69-74301	106	22
172A69-74310	110	1
172A69-74411	111	1
172A69-74440	111	2

Parts No.	Fig. No.	Ref. No.
172A69-74450	111	3
172A69-74460	111	4
172A69-74470	111	5
172A69-74520	111	6
172A69-74540	111	7
172A69-74550	113	1
172A69-74560	113	2
172A69-74590	113	3
172A69-74670	110	2
	115	1
172A69-74680	110	3
	115	2
172A69-74730	114	16
172A69-74740	114	18
172A69-74750	114	19
172A69-74770	114	22
172A69-74780	114	23
172A69-74900	116	11
172A69-74910	116	19
172A69-74960	111	11
172A69-74970	111	12
172A69-74980	111	13
172A69-74990	111	14
172A69-75240	118	12
172A69-75450	118	14
172A69-75470	118	16
172A69-75600	118	18
172A69-75710	118	6
172A69-76050	123	9
172A69-76060	123	10
172A69-76070	123	11
172A69-76120	119	8
172A69-76130	119	10
172A69-76150	123	8
172A69-76190	119	20
172A69-76200-Y	130	2
172A69-76220-Y	130	3
172A69-76270-Y	130	5
172A69-76300-Y	135	1
	136	1
172A69-76320-Y	135	2
	136	2
172A69-76400	130	6
172A69-76410	130	7
172A69-76450	130	10
172A69-76600-Y	137	8
172A69-76620-Y	137	9
172A69-76640-Y	137	10
172A69-76660-Y	137	11
172A69-76680	88	7

Parts No.	Fig. No.	Ref. No.
172A69-77800	143	2
172A69-77810	143	3
172A69-78220	127	5
172A69-78230	122	23
172A69-78250	122	24
172A69-78261	122	25
172A69-78270	122	26
172A69-78280	133	4
172A69-78300	127	6
172A69-78310	127	7
172A69-78320	127	8
172A69-78330	127	9
172A69-78340	128	10
172A69-78350	128	11
172A69-78360	128	12
172A69-78370	138	4
172A69-78380	121	8
172A69-78390	121	9
172A69-78401	134	17
172A69-78410	134	18
172A69-78420	134	19
172A69-78430	127	10
172A69-78440	127	11
172A69-78450	128	13
172A69-78460	128	14
172A69-78470	127	12
172A69-78480	127	13
172A69-78510	129	16
172A69-78520	129	17
172A69-78530	129	19
172A69-78540	129	20
172A69-78550	131	2
	132	3
172A69-78560	129	21
172A69-78570	131	3
172A69-78591	137	19
172A69-78620	137	22
172A69-78630	140	2
172A69-78650	140	3
172A69-78660	140	4
172A69-78670	137	23
172A69-78680	131	4
	132	4
172A69-78700	140	5
172A69-78711	140	6
172A69-78720	140	7
172A69-78731	140	8
172A69-78740	140	9
172A69-78750	140	10
172A69-78760	140	11

Parts No. Index

Parts No.	Fig. No.	Ref. No.
172A69-78770	140	12
172A69-78781	140	13
172A69-78791	140	14
172A69-78801	140	15
172A69-78811	140	16
172A69-78820	140	17
172A69-78830	140	18
172A69-78840	140	19
172A69-78850	140	20
172A69-78860	138	5
172A69-78900	128	15
172A69-78910	138	8
172A69-78920	138	9
172A69-78930	138	10
172A69-78940	138	11
172A69-78950	138	12
172A69-78960	138	13
172A69-78970	141	1
172A69-78980	138	14
172A69-78990	138	15
172A69-79100-Y	127	16
172A69-79140	127	18
		20
172A69-79150-Y	127	19
172A69-79200	137	25
172A69-79210	137	26
172A69-79220	137	27
172A69-79250-Y	137	31
172A69-79400	138	16
172A69-79410	138	17
172A69-79420	138	18
172A69-79430	138	19
172A69-79440	138	20
172A69-79450	138	21
172A69-79460	138	22
172A69-79470	138	23
172A69-79481	138	24
172A69-79490	141	2
172A69-79501	138	25
172A69-79511	138	26
172A69-79520	138	27
172A69-79800	139	2
172A69-79810	139	3
172A69-79820	139	4
172A69-79830	139	5
172A69-79840	139	6
172A69-79850	139	7
172A69-79860	139	8
172A69-79870	139	9
172A69-79890	131	5

Parts No.	Fig. No.	Ref. No.
172A69-79890	132	5
172A69-79950	138	28
172A69-79960	138	29
172A69-81101-Y	146	2
172A69-81502	147	3
172A69-82100	145	1
172A69-82120	146	12
172A69-82300-Y	145	2
172A69-82370	92	36
172A69-94100	152	4
172A77-46050	44	1
172A78-14220	13	25
172A78-64510	116	1
172A86-03480	183	3
172A86-03840	182	5
172A86-74500	124	1
172A89-03500	1	18
172A89-08900	169	1
172A89-13150	9	5
172A89-13820	10	18
172A89-14380	13	39
172A89-16440	26	1
172A89-17150	22	17
172A89-17180	20	19
172A89-17840	32	10
172A89-18580	33	15
172A89-53320	169	3
172A89-61470	59	3
172A89-61520-N	56	3
172A89-61880	54	14
172A89-62550	118	30
172A89-62610	118	32
172A89-64720	65	4
172A89-64730	65	5
172A89-64740	65	24
172A89-64750	65	25
172A89-64760	65	6
172A89-64770	65	7
172A89-64780	65	8
172A89-64790	65	28
172A89-64800	65	26
172A89-64810	65	27
172A89-64820	65	9
172A89-64830	65	10
172A89-64840	65	11
172A89-64850	65	12
172A89-64860	65	29
172A89-64870	65	13
172A89-64880	65	14
172A89-64890	65	30

Parts No.	Fig. No.	Ref. No.
172A89-64900	65	31
172A89-64910	65	32
172A89-64920	65	33
172A89-64950	65	17
172A89-64980	65	14 A
172A89-67450	70	6
172A89-74161	102	2
	173	2
172A89-74700	114	1
172A89-74710	114	14
172A89-74720	114	15
172A89-74730	114	17
172A89-76110	119	2
172A89-76120	119	3
172A89-76150	88	5
172A89-76160	88	6
172A89-76170	127	2
172A89-77820	144	3
172A89-78250	120	10
172A89-78600	137	20
172A89-78610	137	21
172A89-81810	89	49
172B02-17150	73	2
172B02-69040	54	1 -1
	55	20 -1
172B03-03220	3	11
	183	11
172B03-03230	153	48
172B03-03240	3	12
	183	12
172B03-03250	29	1
172B03-03390	1	9
	2	12
	54	7 A
	67	11 B
	182	9
172B03-03460	1	13
	182	13
172B03-04400	4	8
	77	15 F
172B03-04410	4	9
	77	15 G
172B03-04530	153	43
172B03-04580	153	44
172B03-04600	153	45
172B03-04610	153	46
172B03-08200	4	1
172B03-17256	27	9
172B03-17261	27	10
172B03-18950	33	18

Parts No.	Fig. No.	Ref. No.
172B03-19101	30	11
	31	1
172B03-19110	30	12
172B03-19120	31	8
172B03-19130	31	10
172B03-19140	31	11
172B03-19150	31	13
172B03-19160	29	24
172B03-19191	31	15
172B03-19200	31	16
172B03-19210	31	18
172B03-19220	31	19
172B03-19230	31	20
172B03-19240	31	21
172B03-19250	31	22
172B03-19260	31	23
172B03-19270	31	24
172B03-19280	31	25
172B03-19290	31	26
172B03-19300	31	27
172B03-19310	31	28
172B03-19320	31	29
172B03-19330	31	30
172B03-19340	31	31
172B03-19350	31	32
172B03-19360	31	33
172B03-19370	31	34
172B03-19380	31	35
172B03-19390	31	36
172B03-19400	31	37
172B03-19410	31	38
172B03-19420	31	39
172B03-19430	31	40
172B03-19440	31	41
172B03-19450	31	42
172B03-19460	31	43
172B03-19470	31	44
172B03-19480	31	45
172B03-19490	31	46
172B03-19500	31	47
172B03-19510	31	48
172B03-19520	31	49
172B03-19530	31	50
172B03-19540	31	51
172B03-19550	31	52
172B03-19650	34	3
172B03-19660	34	4
172B03-19670	34	5
172B03-19680	33	23
	34	1

Parts No. Index

Parts No.	Fig. No.	Ref. No.
172B03-61960	66	2
172B03-63340	29	29
172B03-63670	29	29 -1
172B03-66170	54	20
	66	12
	67	19
172B04-03370	3	20
	183	20
172B04-03860	153	41
172B04-03980	182	18
172B06-18420	29	15
172B06-18450	33	10
172B06-18550	31	2
172B06-18560	29	16
172B06-18570	29	17
172B06-18580	29	18
172B06-18680	30	19
	31	3
172B06-18690	30	21
	31	4
172B06-18700	30	15
		17
172B06-18930	31	5
172B06-18960	31	6
172B06-18970	31	7
172B06-19120	31	9
172B06-19140	31	12
172B06-19150	31	14
172B06-19200	31	17
172B06-19260	34	2
172B06-37951	181	7
172B06-68040	73	3
172B06-68060	74	3
172B06-68070	73	4
172B06-68101	73	5
172B06-68110	73	6
172B06-68120	73	7
172B06-68130	74	4
172B06-68150	74	5
172B06-68260	74	12
172B06-68340	74	14
172B06-68350	73	13
172B06-68360	73	14
	74	15
	79	3
172B06-68370	73	15
172B06-68380	73	16
	74	16
172B06-68390	81	2
172B06-68400	74	17

Parts No.	Fig. No.	Ref. No.
172B06-68780	76	5
172B06-68800	76	6
172B06-68830	76	7
	81	3
172B06-68870	76	8
	81	4
172B06-68940	82	5
172B06-68950	82	6
172B06-69010	82	7
172B06-69040	82	9
172B06-69080	82	11
172B06-69090	82	12
172B06-69211	78	9
172B06-69240	80	7
172B06-69360	78	16
172B06-69370	79	13
172B06-69380	78	17
172B06-69390	78	18
172B06-69400	78	19
172B06-69450	79	15
172B06-69510	79	25
172B06-69571	81	5
172B06-69581	81	6
172B06-69600	81	7
172B11-03130	3	7
	183	7
172B11-03150	3	8
	183	8
172B11-03160	1	3
172B11-03170	2	3
172B11-03300	3	3
172B11-03310	3	4
172B11-03400	3	21
	183	4
172B11-03410	156	1
	163	1
172B11-03420	154	2
172B11-03530	153	32
172B11-03550	153	34
172B11-03570	153	35
172B11-04790	182	3
172B11-08310	154	1
172B11-08360	2	1
172B11-08700	155	1
172B11-11350	6	2
172B11-11360	6	3
172B11-13100	9	2
172B11-13110	9	3
172B11-13120	9	4
172B11-13150	9	6

Parts No.	Fig. No.	Ref. No.
172B11-13160	9	7
172B11-13170	9	8
172B11-14510	14	1
172B11-14700	14	4
172B11-14760	14	12
172B11-14790	14	16
172B11-16120	15	2
172B11-16270	22	22
172B11-16350	20	2
172B11-16590	28	7
172B11-16601	20	14
172B11-16650	15	16
172B11-16780	26	3
172B11-16810	19	3
172B11-16840	19	1
172B11-16850	19	2
172B11-16880	23	1
172B11-16900	20	18
172B11-17100	21	1
172B11-17110	21	2
172B11-17120	21	3
172B11-17130	21	4
172B11-17140	21	5
172B11-17200	27	3
172B11-17251	154	3
172B11-17270	154	5
172B11-17301	154	6
172B11-17870	30	8
172B11-17920	28	10
172B11-18100	32	13
172B11-18200	29	3
172B11-18210	29	3 -1
172B11-18240	29	5
172B11-18250	29	6
172B11-18290	32	20
172B11-18410	32	24
172B11-18570	6	12
	63	29
172B11-18700	29	8
172B11-18740	29	12
172B11-18780	29	13
172B11-18810	29	11
172B11-18880	28	11
	63	2
172B11-18900	30	10
	33	17
172B11-19110	29	19
172B11-19250	29	25
172B11-19500	33	19
172B11-19520	33	20

Parts No.	Fig. No.	Ref. No.
172B11-19580	33	21
172B11-19610	33	22
172B11-19701	33	24
172B11-19760	29	7
		21
172B11-19770	33	25
172B11-19780	33	26
172B11-19830	30	16
172B11-19870	30	13
172B11-61050	55	3
172B11-61060	55	5
172B11-61080	65	1
172B11-61150	55	6
172B11-61240	55	14
172B11-61280	55	16
172B11-61300	55	17
172B11-61330	55	19
172B11-61420	55	21
172B11-61470	55	23
172B11-61490	68	1
172B11-61600	52	1
172B11-61650	52	3
172B11-61660	52	4
172B11-61720	54	4
172B11-61730	54	5
172B11-61800	54	13
172B11-61830	52	5
172B11-61900	53	1
172B11-61910	53	2
172B11-61950	53	5
172B11-62020	59	5
172B11-62200	55	24
172B11-62210	55	26
172B11-62250	63	4
172B11-62290	66	4
172B11-62300	66	5
172B11-62410	66	1
172B11-62570	118	31
172B11-62900	66	7
172B11-63110	61	1
172B11-63120	61	2
172B11-63130	61	3
172B11-63140	27	12
172B11-63210	61	1 -1
172B11-63220	61	2 -1
172B11-63230	61	3 -1
172B11-63240	27	12 -1
172B11-63500	27	13
172B11-64170	63	6
172B11-64610	63	12

Parts No. Index

Parts No.	Fig. No.	Ref. No.
172B11-64670	63	16
172B11-64680	63	17
172B11-64820	63	23
172B11-64860	63	25
172B11-64950	64	3
172B11-65220	67	14
172B11-65270	67	17
172B11-65720	118	33
172B11-65780	118	34
172B11-68000	72	1
172B11-68030	80	2
172B11-68160	74	6
172B11-68170	74	7
172B11-68180	74	8
172B11-68190	74	9
172B11-68200	74	10
172B11-68210	74	9 -1
172B11-68220	74	10 -1
172B11-68240	73	8
172B11-68250	74	11
172B11-68270	73	9
172B11-68290	73	10
172B11-68300	74	13
172B11-68310	73	11
		11 -1
172B11-68320	73	12
		12 -1
172B11-68340	80	3
172B11-68410	75	2
172B11-68420	75	3
172B11-68430	75	4
172B11-68440	75	5
172B11-68450	75	6
172B11-68460	75	7
172B11-68560	77	4
172B11-68570	77	5
172B11-68580	77	6
172B11-68590	77	7
172B11-68600	77	8
172B11-68631	77	12
172B11-68640	77	13
172B11-68751	76	3
172B11-68752	76	3 -1
172B11-68760	76	4
172B11-68800	73	17
	80	4
172B11-68810	74	18
172B11-68820	78	23
172B11-68830	79	4
172B11-68840	84	1 -1

Parts No.	Fig. No.	Ref. No.
172B11-68860	79	5
172B11-68870	79	8
172B11-68910	72	2
172B11-68920	72	3
172B11-68940	84	1
172B11-68960	84	3
172B11-68970	84	4
172B11-68980	84	5
172B11-69020	82	8
172B11-69030	73	18
172B11-69040	73	19
172B11-69060	73	20
172B11-69070	82	10
172B11-69080	73	21
172B11-69090	78	3
172B11-69160	78	1
172B11-69180	78	6
172B11-69190	78	7
172B11-69200	78	8
172B11-69220	80	5
172B11-69230	80	6
172B11-69240	80	8
172B11-69250	80	9
172B11-69260	78	10
172B11-69270	78	11
172B11-69280	78	12
172B11-69290	78	13
172B11-69300	79	7
172B11-69310	79	10
172B11-69320	79	11
172B11-69330	79	12
172B11-69340	78	14
172B11-69350	78	15
172B11-69360	78	22
172B11-69370	78	24
172B11-69380	78	25
172B11-69390	78	26
172B11-69400	78	27
172B11-69410	78	28
172B11-69420	80	10
172B11-69430	79	18
172B11-69440	79	14
172B11-69450	79	19
172B11-69460	79	20
172B11-69470	79	21
172B11-69480	79	22
172B11-69490	79	23
172B11-69500	79	24
172B11-69510	79	26
172B11-69520	79	27

Parts No.	Fig. No.	Ref. No.
172B11-69530	79	28
172B11-69540	78	20
172B11-69550	78	21
172B11-69560	79	31
172B11-69570	79	32
172B11-69580	79	33
172B11-69610	81	1
172B11-69630	81	8
172B11-69640	81	9
172B11-69650	81	10
172B11-69660	81	11
172B11-69700	80	11
172B11-69801	82	1
172B11-69820	82	16
172B11-69830	82	17
172B11-69861	82	18
172B11-69870	82	19
172B11-69880	82	20
172B11-69890	82	21
172B11-69920	82	22
172B11-69930	82	23
172B11-70020	87	4
172B11-70030	87	6
172B11-70040	87	8
172B11-70050	87	10
172B11-70060	87	12
172B11-70070	87	14
172B11-70080	87	16
172B11-70090	87	17
172B11-70100	87	18
172B11-70110	87	19
172B11-70120	87	20
172B11-70130	87	21
172B11-70140	87	30
172B11-70160	87	31
172B11-70170	87	32
172B11-70190	87	33
172B11-70200	87	34
172B11-70210	87	35
172B11-70220	87	36
172B11-70240	87	37
172B11-70250	87	38
172B11-70260	87	39
172B11-70270	87	40
172B11-70300	87	41
172B11-70310	87	42
172B11-70320	87	43
172B11-70330	87	44
172B11-70340	87	45
172B11-70350	87	22

Parts No.	Fig. No.	Ref. No.
172B11-70360	87	23
172B11-70370	87	24
172B11-70380	87	25
172B11-70400	87	46
172B11-70410	87	47
172B11-70450	87	48
		57
172B11-70460	87	49
172B11-70470	87	50
172B11-70490	87	51
172B11-70500	87	52
172B11-70510	87	53
172B11-70520	87	26
172B11-71520	92	7
172B11-71530	92	10
172B11-71600	88	3
172B11-71720	93	10
		13
172B11-72530	92	2
172B11-72540	92	3
172B11-72550	92	4
	93	2
172B11-72620	92	5
172B11-72630	92	8
172B11-72640	92	11
172B11-72650	92	14
172B11-72700	92	1
172B11-72710	92	22
172B11-72720	92	23
172B11-72730	92	24
172B11-72740	92	25
172B11-72750	92	26
172B11-72760	92	27
172B11-72770	92	28
172B11-72780	92	29
172B11-72790	92	30
172B11-72800	93	1
172B11-72801	180	1
172B11-72810	93	3
172B11-72820	93	4
172B11-72830	93	5
172B11-72840	93	6
172B11-72850	93	7
172B11-72860	93	8
172B11-72870	93	11
172B11-72880	93	14
172B11-72890	93	17
172B11-73600	97	1
172B11-73630	97	2
172B11-73700	118	3

Parts No. Index

Parts No.	Fig. No.	Ref. No.
172B11-73710	118	4
172B11-73750	98	1
172B11-73760	98	2
172B11-73770	98	3
172B11-73780	98	4
172B11-74230	107	25
	178	25
	179	27
172B11-74240	107	26
	178	26
	179	28
172B11-74250	107	27
	178	27
	179	30
172B11-74260	107	28
	178	28
	179	31
172B11-74290	177	21
172B11-74300	177	22
172B11-74410	112	8
	157	1
	164	1
172B11-74850	116	2
172B11-74860	116	10
172B11-74900	158	1
	165	1
172B11-74910	158	9
	165	9
172B11-76150	111	26
172B11-76420	130	8
172B11-76460	130	11
172B11-76510	137	6
172B11-76520	161	2
	168	5
172B11-76550	161	3
	168	6
172B11-76560	161	4
	168	7
172B11-76570	161	5
	168	8
172B11-76580	168	9
172B11-76600	168	11
172B11-76720	88	9
172B11-76900	130	1 -1
	151	2 -1
172B11-77900	161	8
	168	14
172B11-77930	161	9
	168	15
172B11-78870	138	6

Parts No.	Fig. No.	Ref. No.
172B11-78881	138	7
172B11-79540	142	1
172B11-79550	142	2
172B11-79560	142	3
172B11-79570	142	4
172B11-79940	160	2
	167	2
172B11-79950	160	3
	167	3
172B11-79960	160	4
	167	4
172B11-79970	160	5
	167	5
172B11-79980	160	6
	167	6
172B11-79990	160	7
	167	7
172B11-97400	180	2
172B11-97500	180	3
172B11-97520	180	5
		7
172B11-97530	180	6
172B11-97560	180	9
172B11-97570	180	10
172B11-97580	180	11
172B11-97590	180	12
172B11-97600	180	13
172B11-97610	180	14
172B11-97620	180	15
172B11-97630	180	16
172B11-97650	180	17
172B11-97660	180	18
172B11-97670	180	19
172B11-97680	180	20
172B11-97690	180	21
172B11-97700	180	22
172B11-97710	180	23
172B11-97720	180	24
172B11-97740	180	25
172B11-97750	180	26
172B12-03070	153	1
172B12-03110	3	6
	183	6
172B12-03140	1	2
172B12-03180	3	9
	183	9
172B12-03360	3	18
	77	14 A
	183	18
172B12-03370	153	20

Parts No.	Fig. No.	Ref. No.
172B12-03371	153	20 -1
172B12-03381	183	18 -1
172B12-03470	182	2
172B12-03510	153	29
172B12-03580	153	36
172B12-03910	77	14 B
172B12-03930	3	27
	183	26
172B12-03931	183	26 -1
172B12-03940	153	42
172B12-03941	153	42 -1
172B12-06700	170	1
172B12-08120	1	1
172B12-08121	182	1
172B12-08410	3	1
172B12-08411	183	1
172B12-08710	162	1
172B12-11300	6	1
172B12-11301	6	1 -1
172B12-11390	6	8
172B12-11410	6	9
172B12-11440	6	11
172B12-11500	7	1
172B12-11530	7	7
172B12-11550	7	8
172B12-11560	7	9
172B12-13200	9	9
172B12-13300	10	6
172B12-13310	10	7
172B12-13350	11	1
172B12-13380	11	3
172B12-13440	11	4
172B12-13450	10	8
172B12-13510	10	10
172B12-13520	10	11
172B12-13550	10	14
172B12-13560	10	15
172B12-13600	11	7
172B12-13650	11	9
172B12-13660	11	11
172B12-13670	11	12
172B12-13690	11	13
172B12-13700	11	17
172B12-13750	11	19
172B12-13760	11	20
172B12-13770	11	14
172B12-13780	11	15
172B12-13800	11	21
172B12-13810	11	22
172B12-13850	11	23

Parts No.	Fig. No.	Ref. No.
172B12-13900	11	24
172B12-13950	6	13
172B12-13980	11	26
172B12-14700	14	8
172B12-16100	15	1
172B12-16440	20	3
172B12-16501	15	5
172B12-16502	15	5 -1
172B12-16620	16	1
172B12-16750	15	18
172B12-16770	15	20
172B12-17850	30	2
172B12-17860	30	5
172B12-18150	32	18
172B12-18200	32	19
172B12-18300	32	21
172B12-18370	32	22
172B12-18440	33	4
172B12-18480	33	6
172B12-18490	33	7
172B12-18540	33	8
172B12-18550	33	9
172B12-18570	33	11
172B12-18580	33	12
172B12-18630	33	14
172B12-19800	30	14
172B12-19840	30	18
172B12-19850	30	20
172B12-37300	37	1
172B12-37310	37	2
172B12-37330	37	4
172B12-37340	37	5
172B12-37370	37	6
172B12-37380	37	7
172B12-37750	181	1
172B12-37760	181	2
172B12-37790	181	3
172B12-37800	181	4
172B12-37810	181	5
172B12-37820	181	6
172B12-53310	49	1
172B12-54100	50	1
172B12-61180	55	9
172B12-61220	55	11
172B12-61240	55	12
172B12-61260	55	13
172B12-61340	58	1
172B12-61380	58	3
172B12-61440	59	1
172B12-61470	59	4

Parts No. Index

Parts No.	Fig. No.	Ref. No.
172B12-61550	56	5
172B12-61560	56	6
172B12-61680	54	2
172B12-61750	54	8
172B12-61760	54	6
172B12-61790	54	11
172B12-61900	54	15
172B12-61910	54	18
172B12-62130	33	27
172B12-63150	62	2
172B12-63170	62	4
172B12-63180	62	5
172B12-63250	62	2 -1
172B12-64200	63	7
172B12-64620	63	13
172B12-64630	63	14
172B12-64640	63	15
172B12-64690	63	28
172B12-64740	63	19
172B12-64750	63	32
172B12-64760	63	20
172B12-64770	63	21
172B12-64790	63	22
172B12-64810	63	33
172B12-64820	63	34
172B12-64830	63	24
172B12-65120	67	4
172B12-65160	67	6
172B12-65170	67	7
172B12-65180	67	9
172B12-65190	67	11
172B12-65210	70	1
172B12-65600	68	2
172B12-65641	68	5
172B12-65650	68	6
172B12-65800	69	1
172B12-65910	69	5
172B12-65920	69	6
172B12-65930	69	7
172B12-65940	69	8
172B12-65950	70	2
172B12-66500	70	4
172B12-66800	70	7
172B12-68500	170	3
172B12-68550	170	4
172B12-70010	87	3
172B12-70020	87	5
172B12-70030	87	7
172B12-70040	87	9
172B12-70050	87	11

Parts No.	Fig. No.	Ref. No.
172B12-70060	87	13
172B12-70070	87	15
172B12-71100	86	1
172B12-73100	87	2
172B12-73150	87	54
172B12-73160	87	55
172B12-73200	87	56
172B12-73210	87	58
172B12-74100	100	1
172B12-74101	171	1
172B12-74150	107	18
	178	18
172B12-74160	107	19
	178	19
172B12-74350	179	16
172B12-74360	179	19
172B12-74440	178	16
172B12-74800	117	1
172B12-76110	119	5
172B12-76150	119	13
172B12-76250	130	4
172B12-76340	168	2
172B12-76350	168	3
172B12-76380	168	4
172B12-76440	130	9
172B12-76470	121	1
172B12-76570	136	3
172B12-78080	121	3
172B12-78110	121	6
172B12-78120	121	7
172B12-78130	120	1
172B12-78150	120	2
172B12-78160	120	3
172B12-78170	120	4
172B12-78180	120	5
172B12-78190	138	3
172B12-78200	120	6
172B12-78210	120	7
172B12-78221	120	8
172B12-78230	120	9
172B12-78300	132	1
172B12-78310	132	2
172B12-78400	120	9 -1
172B12-78490	134	20
172B12-79300	136	12
172B12-79620	137	28
172B12-79960	168	17
172B12-83690	148	10
172B27-74460	179	35
172B27-74470	179	36

Parts No.	Fig. No.	Ref. No.
172B36-03100	182	19
184015-59130	10	23
184015-59190	10	27
184016-44700	10	19
184016-44710	10	20
194145-04810	13	34
194151-57100	16	6
194202-56460	14	34
	15	21
		22
		23
		24
		25
	20	24
		25
		26
	32	26
	137	17
	138	2
	139	1
	144	1
194464-52190	20	22
194630-42120	38	6
198200-04031	13	4
198200-04040	13	5
198360-52160	21	6
198535-52110	20	6
198535-52120	20	7
198535-52140	20	8
198535-52170	20	9
1A1380-62160	67	1
1A1686-57850	10	21
1A6382-51510	20	5
1A7030-87411	29	32
1A7030-88660	30	22
1A7400-61250	11	27
	118	29
1A7522-52950	20	23
1A7810-51750	15	9
1A8060-84280	29	31 -1
1A8110-84210	29	31
1A8180-00400	32	1
1A8280-50900	25	1
1C6900-06180	15	6
1C7100-99650	5	4
1D4180-22850	129	1
1E3030-78370	126	1
1E8080-83321	17	4
1E8235-84910	20	13
1E8465-83170	16	3

Parts No.	Fig. No.	Ref. No.
1E8490-84130	20	31
	28	13
	33	28
1E8775-84120	16	7
	22	20
	26	6
	28	12
1E8940-83450	15	10
1RF001-00024	28	1
1T3681-86450	38	7
1W3855-50160	85	1
	170	2
22117-040000	41	5
22117-060000	9	14
	29	33
22117-080000	109	10
	111	15
22117-100000	6	4
	119	24
		25
22137-040000	81	12
22137-050000	27	15
22137-060000	98	7
22137-080000	14	35
	15	36
	33	29
		30
	44	15
	66	16
	67	23
	118	35
	150	21
22137-100000	13	46
	14	36
		37
	29	34
	32	28
	33	31
	45	5
	56	9
	130	16
		17
	150	22
		23
22137-120000	119	26
22137-140000	170	5
22137-160000	48	3
	71	3
	118	36
22137-180000	87	78

Parts No. Index

Parts No.	Fig. No.	Ref. No.
22137-200000	71	4
22137-240000	109	11
22157-060000	9	15
	20	32
22157-080000	17	5
	66	26
		31
	84	6
22157-100000	52	7
		8
		9
	66	32
		33
	67	24
	68	9
	69	13
	70	10
	88	11
	118	37
22157-120000	57	4
	147	16
	148	16
22157-140000	89	50
	146	17
	147	17
	148	17
	152	11
22190-120002	118	23
22217-050000	27	16
22217-060000	109	12
22217-080000	14	38
	15	26
	32	29
	137	12
22217-100000	6	5
	9	16
	73	25
	89	51
	99	6
22217-120000	9	17
	168	18
22217-140000	89	52
	92	38
	137	32
	146	18
	147	18
	148	18
	152	12
22217-160000	9	18
		19

Parts No.	Fig. No.	Ref. No.
22217-160000	35	3
	36	14
	38	11
	48	4
	70	11
	71	5
	95	82
	96	47
	118	38
22217-180000	87	79
22217-200000	37	11
22242-000210	134	2
22242-000250	44	16
	134	3
22242-000350	38	8
	87	62
	150	24
22242-000450	37	8
22242-000720	99	7
22242-001000	145	10
22252-000190	87	63
22252-000220	95	76
22252-000350	32	16
	96	34
22252-000450	150	25
		26
22252-000800	38	9
22272-000060	79	34
22272-000070	44	17
22272-000080	79	16
22351-030028	22	16
22351-035040	44	18
22351-060014	87	64
22351-060040	44	19
22372-080000	118	39
22372-100000	54	25
22417-200160	109	13
22417-200200	44	20
	66	34
	67	25
		26
22417-250200	45	6
22417-320200	11	30
22487-080300	109	14
22859-500160	65	20
23000-013000	13	16
	137	29
	138	30
	140	21
	141	3

Parts No.	Fig. No.	Ref. No.
23000-013000	142	5
	160	8
	167	8
23000-070000	7	11
23000-090000	7	12
23001-016000	120	11
	122	28
23001-022000	30	23
	120	12
23001-025000	134	21
23001-035000	127	14
23001-041000	120	13
23001-048000	10	31
23001-054000	121	10
23001-070000	121	11
23001-090000	121	12
23061-050500	14	39
23065-070225	12	6
23080-013000	13	31
23080-018000	30	24
	32	30
23391-020000	109	26
	123	26
23391-040000	123	27
23393-020000	109	27
	160	9
	167	9
23394-020000	109	28
23871-005000	94	32
23871-010000	96	17
	109	15
23871-020000	88	8
		10
	122	19
23871-030000	99	8
	119	27
23871-040000	168	19
23871-060000	135	8
	136	8
23876-020000	36	11
23876-040000	13	17
24101-063074	38	10
24104-062020	32	17
24190-060001	95	67
24190-080001	180	27
24190-100001	95	68
	114	30
24190-140001	124	2
24311-000110	14	28
24311-000160	10	4

Parts No.	Fig. No.	Ref. No.
24311-000160	111	16
	113	5
24311-000250	109	16
24311-000320	13	18
		19
	109	17
24311-000340	44	21
24311-000490	36	12
24311-000700	150	27
24315-000070	87	65
	95	77
	96	15
	103	24
	174	24
24315-000080	87	66
	95	69
	114	10
24315-000090	87	27
	96	20
24315-000100	87	67
	95	42
	111	17
24315-000110	87	68
	95	43
	96	16
		27
	101	6
		28
	104	12
	109	22
	111	18
		33
	112	5
	113	6
		13
	114	31
	115	25
	123	7
		17
	124	22
	137	2
	157	6
	164	6
	172	6
		28
	175	12
24315-000140	39	8
	95	44
		70
	103	35

Parts No. Index

Parts No.	Fig. No.	Ref. No.
24315-000140	122	7
		13
	129	8
	174	35
24315-000160	96	43
24315-000180	87	69
	89	44
	91	38
	95	45
		71
		78
	96	21
		25
		28
		44
	98	6
	101	30
	106	37
	111	19
	119	23
	122	17
	123	3
		15
		24
	125	5
	128	7
	159	3
	166	3
	172	30
	177	37
24315-000200	87	60
	111	20
24315-000210	134	4
24315-000240	87	70
	90	37
	91	36
	122	9
	123	12
	134	9
		12
24315-000250	96	45
	134	5
24315-000260	87	28
	89	38
	91	30
24315-000300	96	46
24315-000320	95	72
24315-000800	99	12
24315-001000	99	13
24321-000400	37	9

Parts No.	Fig. No.	Ref. No.
24321-000700	101	19
	102	14
	103	41
	104	10
		22
	105	12
		27
	106	13
		35
	107	17
	108	12
		26
	172	19
	173	14
	174	41
	175	10
		22
	176	12
		27
	177	13
		35
	178	15
	179	12
		38
24321-001000	145	6
24321-001350	118	24
24321-001700	118	25
24325-000350	87	29
	119	28
24325-000400	119	29
24325-000650	119	30
24325-000850	87	71
24325-000950	99	14
24325-001300	96	29
24325-001400	96	30
24341-000300	118	26
24512-053054	96	36
24550-012200	79	17
24550-025150	44	5
24550-045250	94	10
24761-020000	39	9
	44	22
	89	39
	91	31
	143	8
	144	4
	145	11
	147	19
	148	19
	149	15

Parts No.	Fig. No.	Ref. No.
24761-020000	149	16
	150	28
		29
	152	13
24761-040000	89	40
	146	19
	147	20
	148	20
	152	14
24761-050000	90	35
	91	32
	92	31
26013-060102	29	35
26013-060122	14	40
	16	8
	20	33
26013-060162	9	20
26013-060602	98	8
26013-080122	15	37
	20	34
	54	26
26013-080162	10	32
		33
		34
		35
	13	32
	15	27
	20	35
	23	5
	32	31
	33	32
	42	3
	43	2
	55	28
	84	7
	112	6
	150	30
	157	7
	164	7
26013-080202	13	20
	32	32
	66	27
	168	20
26013-080252	109	29
	161	11
	168	21
26013-080302	13	21
26013-080402	137	30
26013-080452	32	33
26013-080902	113	14

Parts No.	Fig. No.	Ref. No.
26013-100162	9	21
	14	41
		42
	15	28
	17	6
	56	10
	65	36
	100	2
	111	34
	118	40
	133	5
	134	14
	171	2
26013-100202	6	15
	7	13
	11	31
		32
	15	29
		30
	27	17
	28	14
	41	6
	57	5
26013-100252	22	21
	45	7
	52	10
		11
		12
	55	29
		30
	64	4
	66	35
		36
	67	27
	68	10
	69	14
	70	12
	83	3
	88	12
		13
	109	30
	110	27
		28
	114	39
	115	26
	118	41
	135	9
	136	9
	150	31
	168	22

Parts No. Index

Parts No.	Fig. No.	Ref. No.
26013-100302	10	36
	13	47
		48
		49
	86	2
	119	31
	127	23
26013-100352	71	6
26013-100452	88	14
26013-100502	130	18
	134	15
	150	32
26013-100552	130	19
26013-100702	33	33
26013-100852	29	36
26013-120302	54	27
	57	6
	92	39
	147	21
	148	21
	152	15
26013-120352	47	4
26013-120402	99	15
	130	20
26013-120452	119	32
26013-120552	130	21
	135	10
	136	10
26013-120602	127	24
	161	12
	168	23
26013-120702	135	11
	136	11
26014-060162	14	43
	20	36
		37
	27	18
	28	15
	116	22
		23
26014-060202	25	23
26014-060252	20	38
26014-080122	6	16
26014-080162	10	37
	11	33
		34
	15	31
	29	37
		38
		39

Parts No.	Fig. No.	Ref. No.
26014-080162	29	40
	33	34
	65	37
	66	17
		18
		28
	137	13
	161	13
	168	24
26014-080202	7	14
	29	41
	32	34
	53	6
	97	4
	117	2
26014-080252	32	35
	33	35
	137	14
26014-080302	32	36
26014-080352	161	14
	168	25
26014-080402	32	37
26014-100162	15	32
	66	19
	118	42
26014-100202	11	35
		36
		37
	13	50
	20	39
	33	36
		37
		38
		39
		40
	44	23
	54	28
		29
		30
	55	31
	66	37
	93	25
	118	27
		28
		43
	170	6
	180	30
26014-100252	7	15
	11	38
		39

Parts No.	Fig. No.	Ref. No.
26014-100252	29	42
	52	13
		14
		15
	67	28
		29
	68	11
	70	13
		14
	89	53
	121	2
26014-100302	11	40
	55	32
26022-050122	13	33
	109	18
26022-080162	12	9
26023-060122	15	33
26051-080002	15	34
	20	40
	33	41
	54	31
26076-080252	137	15
26076-100402	99	9
26076-120302	9	22
26076-160402	71	7
26076-160502	96	48
26076-161302	9	23
26076-200409	37	12
26106-060162	34	6
26106-060202	30	25
26106-060252	30	26
26106-060602	34	7
26106-080162	55	33
	65	34
		35
26106-080252	30	27
26106-100122	47	5
	100	3
	171	3
26106-100162	55	34
	56	11
		12
		13
		14
		15
		16
		17
	65	21
		22
26106-100202	58	4

Parts No.	Fig. No.	Ref. No.
26106-100202	59	6
26106-100352	32	38
26106-100652	6	6
26116-050202	27	19
26116-080202	150	33
26116-080752	32	39
26116-080952	14	44
26116-100202	89	54
26116-120752	168	26
26116-121402	89	55
26116-140252	137	33
	146	20
		21
26116-140352	89	56
	92	40
	146	22
	147	22
	148	22
	152	16
26116-160352	9	24
	118	44
26116-160502	169	7
26116-160702	36	15
26116-160852	38	12
26116-161202	149	17
	150	34
		35
26116-180552	87	80
26216-160452	95	83
26347-080002	66	20
26347-100002	54	32
	66	21
	67	30
26366-060002	34	8
26366-100002	6	7 -1
	55	35
26367-100002	13	51
26450-050102	113	7
26450-050122	87	72
	111	21
26450-050202	111	22
26450-060162	96	37
	109	19
26450-060202	87	73
	96	38
26450-060302	94	33
26450-060502	114	32
26450-080162	64	5
	65	38
	114	33

Parts No. Index

Parts No.	Fig. No.	Ref. No.
26450-080252	87	74
	96	12
26450-100352	95	79
	96	39
26450-100502	119	33
26450-120302	95	80
26450-120402	87	75
26450-120702	87	76
26559-050202	65	23
26577-050122	69	15
26587-040122	41	7
26617-100002	87	77
26716-080002	15	35
	17	7
26716-100002	6	7
	118	9
26716-120002	89	57
26716-160002	38	13
	95	84
	149	18
	150	36
		37
26716-180002	145	12
26716-200002	71	8
26736-100002	111	23
26736-140002	170	7
26756-100002	150	38
26776-180002	20	41
26979-100122	180	28
41851-000110	23	6
	109	24
	110	23
		26
		29
	111	27
		29
		31
		35
	112	3
		7
	113	9
		15
	114	36
		38
		40
	115	27
	116	24
	119	15
		17
		34

Parts No.	Fig. No.	Ref. No.
41851-000110	122	20
	124	3
		9
		11
		13
		16
		18
		23
	125	7
		8
	128	8
	129	4
		10
	157	4
		8
	159	4
	164	4
		8
	166	4
41851-000140	111	36
	119	21
	128	5
		9
	129	11
41851-000180	89	58
	90	39
	97	5
	119	35
		38
	122	21
	123	13
		28
	125	3
	129	12
41851-000240	91	34
	119	4
		19
	123	29
	129	13
	134	16
772499-37100	36	1
772A69-14100	13	1
772B11-75100	118	1
933147-03400	89	59
933147-08501	169	8
933160-01370	119	36
	123	30
	129	14
933166-24240	32	40
933168-14170	89	60

Parts No.	Fig. No.	Ref. No.
933168-55770	76	9
933171-13691	37	10
933172-14120	71	9

Parts No.	Fig. No.	Ref. No.